TRSF3243E
ZHCSOZ9 – NOVEMBER 2021

具有 ±15kV IEC ESD 保护功能的 TRSF3243E 3V 至 5.5V 多通道 RS-232 兼容线路驱动器和接收器

1 特性

- 为 RS-232 总线引脚提供 ESD 保护
  - ±15kV 人体放电模型 (HBM)
  - ±8kV IEC61000-4-2 接触放电
  - ±15kV IEC61000-4-2 气隙放电
- 由单个 3V 至 5.5V V_{CC} 电源供电
- 始终有效同相接收器输出 (ROUT2B)
- 低待机电流：1 μA（典型值）
- 外部电容器：4 × 0.1 μF
- 接受 5V 逻辑输入及 3.3V 电源
- 串行鼠标驱动能力
- 支持高达 1Mbit/s 的运行速度
- 自动断电功能，在没有检测到有效 RS-232 信号时禁用驱动器输出
- 采用节省空间的 RHB (5mm x 5mm QFN-32) 封装

2 应用

- 工业 PC
- 有线网络
- 数据中心和网络设备
- 笔记本电脑
- 手持设备

3 说明

TRSF3243E 由三个线路驱动器、五个线路接收器和一个双电荷泵电路组成，在串行端口连接引脚上具有 ±15kV ESD（HBM 和 IEC61000-4-2，气隙放电）和 ±8kV ESD（IEC61000-4-2，接触放电）保护。该器件可在异步通信控制器和串行端口连接器之间提供电气接口。电荷泵和四个小型外部电容器支持由 3V 至 5.5V 单电源供电。另外，该器件包括一个始终有效同相输出 (ROUT2B)，这使得使用振铃指示的应用能够在器件断电的情况下发送数据。该器件以高达 1Mbit/s 的数据信号传输速率运行，具有从 18V/μs 至 150V/μs 的更高压摆率范围。

串行端口处于非活动状态时，可提供灵活的电源管理控制选项。当 FORCEON 为低电平且 $\overline{\text{FORCEOFF}}$ 为高电平时，自动断电功能启用。在这种运行模式下，如果器件未检测到有效的 RS-232 信号，则禁用驱动器输出。如果 $\overline{\text{FORCEOFF}}$ 设定为低电平，则驱动器和接收器（ROUT2B 除外）均关闭，且电源电流降低至 1 μA。断开串行端口的连接或关闭外围驱动器会导致发生自动断电情况。

器件信息

器件型号	封装(1)	封装尺寸（标称值）
TRSF3243E	VQFN (RHB) (32)	5,00 mm × 5,00 mm
	TSSOP (PW) (28)(2)	9,70 mm × 4,40 mm

(1) 如需了解所有可用封装，请参阅数据表末尾的可订购产品附录。
(2) 产品预发布。

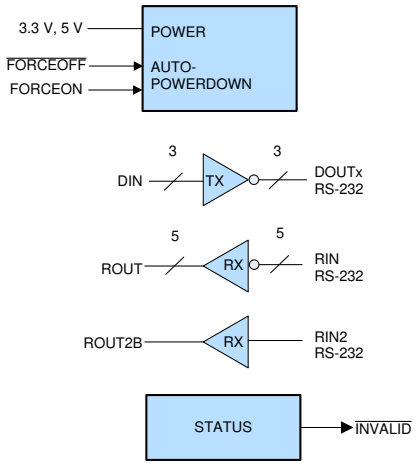

简化版电路

本文档旨在为方便起见，提供有关 TI 产品中文版本的信息，以确认产品的概要。有关适用的官方英文版本的最新信息，请访问 www.ti.com，其内容始终优先。TI 不保证翻译的准确性和有效性。在实际设计之前，请务必参考最新版本的英文版本。

Table of Contents

1 特性 1
2 应用 1
3 说明 1
4 Revision History 2
5 Pin Configuration and Functions 3
6 Specifications 5
6.1 Absolute Maximum Ratings 5
6.2 ESD Ratings 5
6.3 ESD Ratings - IEC Specifications 5
6.4 Recommended Operating Conditions 6
6.5 Thermal Information 6
6.6 Electrical Characteristics 6
6.7 Electrical Characteristics: Driver 7
6.8 Switching Characteristics: Driver 7
6.9 Electrical Characteristics: Receiver 7
6.10 Switching Characteristics: Receiver 8
6.11 Electrical Characteristics: Auto-Powerdown 8
6.12 Switching Characteristics: Auto-Powerdown 8
Parameter Measurement Information 9
7 Detailed Description 12
7.1 Overview 12
Functional Block Diagram 12
7.2 Feature Description 13
7.3 Device Functional Modes 13
8 Application and Implementation 14
8.1 Application Information 14
8.2 Typical Application 14
8.3 Design Requirements 16
8.4 Detailed Design Procedure 16
9 Power Supply Recommendations 16
10 Layout 17
10.1 Layout Guidelines 17
10.2 Layout Example 17
11 Mechanical, Packaging, and Orderable Information 18

4 Revision History

注：以前版本的页码可能与当前版本的页码不同

DATE	REVISION	NOTES
November 2021	*	Initial Release

Copyright © 2022 Texas Instruments Incorporated

5 Pin Configuration and Functions

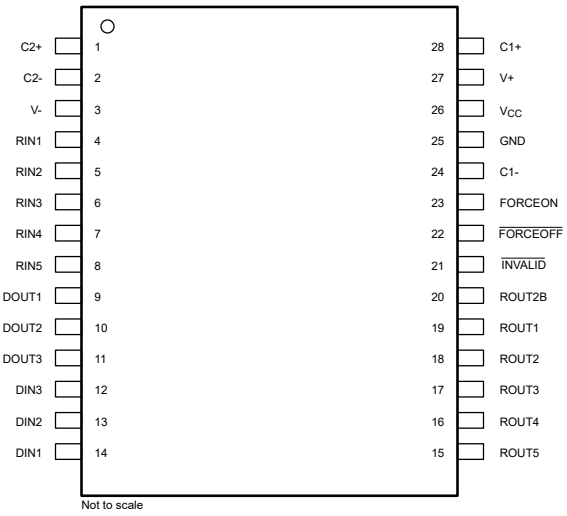

图 5-1. PW (TSSOP) Packages, 28 Pin, Top View

表 5-1. Pin Functions

PIN		TYPE(1)	DESCRIPTION
NO.	NAME		
1	C2+	—	Positive terminal of the charge-pump capacitor
2	C2-	—	Negative terminal of the charge-pump capacitor
3	V-		Negative charge-pump rail
4	RIN1	I	RS-232 receiver inputs
5	RIN2		
6	RIN3		
7	RIN4		
8	RIN5		
9	DOUT1	O	RS-232 driver outputs
10	DOUT2		
11	DOUT3		
12	DIN3	I	Driver logic inputs
13	DIN2		
14	DIN1		
15	ROUT5	O	Receiver logic outputs
16	ROUT4		
17	ROUT3		
18	ROUT2		
19	ROUT1		
20	ROUT2B	—	Always-active non-inverting receiver logic output
21	$\overline{\text{INVALID}}$	O	Invalid Output Pin
22	$\overline{\text{FORCEOFF}}$	I	Auto Powerdown Control input (Refer to Truth Table)
23	FORCEON	I	Auto Powerdown Control input (Refer to Truth Table)
24	C1-	—	Negative terminal of the charge-pump capacitor
25	GND	—	Ground
26	V_{CC}	—	3-V to 5.5-V supply voltage
27	V+	—	Positive charge-pump rail
28	C1+	—	Positive terminal of the charge-pump capacitor

(1) Signal Types: I = Input, O = Output, I/O = Input or Output.

Copyright © 2022 Texas Instruments Incorporated

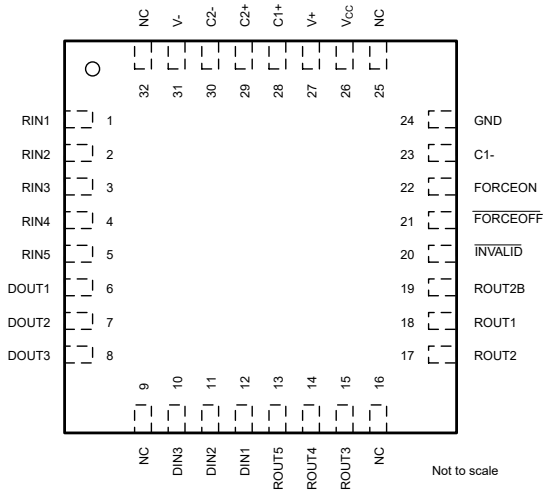

图 5-2. RHB (VQFN) Package, 32 Pin, Top View

表 5-2. Pin Functions

PIN		TYPE	DESCRIPTION
NO.	NAME		
1	RIN1	I	RS-232 receiver inputs
2	RIN2		
3	RIN3		
4	RIN4		
5	RIN5		
6	DOUT1	O	RS-232 driver outputs
7	DOUT2		
8	DOUT3		
9	NC	—	No internal connection
10	DIN3	I	Driver logic inputs
11	DIN2		
12	DIN1		
13	ROUT5	O	Receiver logic outputs
14	ROUT4		
15	ROUT3		
16	NC	—	No internal connection
17	ROUT2	O	Receiver outputs
18	ROUT1		
19	ROUT2B	O	Always-active non-inverting receiver output
20	$\overline{\text{INVALID}}$	O	Invalid Output Pin
21	$\overline{\text{FORCEOFF}}$	I	Auto Powerdown Control input (Refer to Truth Table)
22	FORCEON	I	Auto Powerdown Control input (Refer to Truth Table)
23	C1-	—	Negative terminal of the charge-pump capacitor
24	GND	—	Ground
25	NC	—	No internal connection
26	V_{CC}	—	3-V to 5.5-V supply voltage
27	V+	—	Positive charge-pump rail
28	C1+	—	Positive terminal of the charge-pump capacitor
29	C2+	—	
30	C2-	—	Negative terminal of the charge-pump capacitor
31	V-	—	Negative charge-pump rail
32	NC	—	No internal connection

Copyright © 2022 Texas Instruments Incorporated

6 Specifications

6.1 Absolute Maximum Ratings

over operating free-air temperature range (unless otherwise noted) (1)

			MIN	MAX	UNIT
V_{CC}	Supply voltage range(2)		–0.3	6	V
V+	Positive-output supply voltage range(2)		–0.3	7	V
V–	Negative-output supply voltage range(2)		0.3	–7	V
V+ – V–	Supply voltage difference(2)			13	V
V_I	Input voltage range	Driver ($\overline{\text{FORCEOFF}}$, FORCEON)	–0.3	6	V
		Receiver	–25	25	
V_O	Output voltage range	Driver	–13.2	13.2	V
T_J	Operating virtual junction temperature			150	°C
T_{stg}	Storage temperature range		–65	150	°C

(1) Operation outside the Absolute Maximum Ratings may cause permanent device damage. Absolute Maximum Ratings do not imply functional operation of the device at these or any other conditions beyond those listed under Recommended Operating Conditions. If used outside the Recommended Operating Conditions but within the Absolute Maximum Ratings, the device may not be fully functional, and this may affect device reliability, functionality, performance, and shorten the device lifetime.
(2) All voltages are with respect to network GND.

6.2 ESD Ratings

				VALUE	UNIT
$V_{(ESD)}$	Electrostatic discharge	Human-body model (HBM), per ANSI/ESDA/JEDEC JS-001(1)	All pins except RIN1, RIN2, RIN3, RIN4, RIN5, DOUT1, DOUT2 and DOUT3 pins	±3000	V
			RIN1, RIN2, RIN3, RIN4, RIN5, DOUT1, DOUT2 and DOUT3 pins to GND	±15000	
		Charged device model (CDM), per ANSI/ESDA/JEDEC JS-002(2)	All pins	±1500	

(1) JEDEC document JEP155 states that 500-V HBM allows safe manufacturing with a standard ESD control process.
(2) JEDEC document JEP157 states that 250-V CDM allows safe manufacturing with a standard ESD control process.

6.3 ESD Ratings - IEC Specifications

				VALUE	UNIT
$V_{(ESD)}$	Electrostatic discharge	IEC 61000-4-2 Contact Discharge (1)	RIN1, RIN2, RIN3, RIN4, RIN5, DOUT1, DOUT2 and DOUT3 pins	±8,000	V
		IEC 61000-4-2 Air-gap Discharge (1)		±15,000	

(1) A minimum of 1-µF capacitor between V_{CC} and GND is required to meet the specified IEC 61000-4-2 rating.

Copyright © 2022 Texas Instruments Incorporated

6.4 Recommended Operating Conditions

see (1)

				MIN	NOM	MAX	UNIT
	Supply voltage		V_{CC} = 3.3 V	3	3.3	3.6	V
			V_{CC} = 5 V	4.5	5	5.5	
V_{IH}	Driver and control high-level input voltage	DIN, $\overline{\text{FORCEOFF}}$, FORCEON	V_{CC} = 3.3 V	2			V
			V_{CC} = 5 V	2.4			
V_{IL}	Driver and control low-level input voltage	DIN, $\overline{\text{FORCEOFF}}$, FORCEON				0.8	V
V_I	Driver and control input voltage	DIN, $\overline{\text{FORCEOFF}}$, FORCEON		0		5.5	V
V_I	Receiver input voltage			–25		25	V
T_A	Operating free-air temperature			–40		85	°C

(1) Test conditions are C1 – C4 = 0.1 μF at V_{CC} = 3.3 V ± 0.3 V; C1 = 0.047 μF, C2 – C4 = 0.33 μF at V_{CC} = 5 V ± 0.5 V.

6.5 Thermal Information

THERMAL METRIC(1)		TRSF3243E		UNIT
		VQFN (RHB)	TSSOP (PW)	
		32 PINS	28 PINS	
$R_{\theta JA}$	Junction-to-ambient thermal resistance	34.1	70.3	°C/W
$R_{\theta JC(top)}$	Junction-to-case (top) thermal resistance	25.9	21.0	°C/W
$R_{\theta JB}$	Junction-to-board thermal resistance	14.6	29.2	°C/W
ψ_{JT}	Junction-to-top characterization parameter	0.5	1.3	°C/W
ψ_{JB}	Junction-to-board characterization parameter	14.6	28.8	°C/W
$R_{\theta JC(bot)}$	Junction-to-case (bottom) thermal resistance	5.1	N/A	°C/W

(1) For more information about traditional and new thermal metrics, see the *Semiconductor and IC Package Thermal Metrics* application report.

6.6 Electrical Characteristics

over recommended ranges of supply voltage and operating free-air temperature (unless otherwise noted)

PARAMETER			TEST CONDITIONS(2)	MIN	TYP(1)	MAX	UNIT
I_I	Input leakage current	$\overline{\text{FORCEOFF}}$, FORCEON			±0.01	±1	μA
I_{CC}	Supply current	Auto-powerdown disabled	No load, $\overline{\text{FORCEOFF}}$ and FORCEON = V_{CC}		0.3	1.2	mA
		Powered off	No load, $\overline{\text{FORCEOFF}}$ = GND		1	10	μA
		Auto-powerdown enabled	No load, $\overline{\text{FORCEOFF}}$ = V_{CC}, FORCEON = GND, All RIN are open or grounded, All DIN are grounded		1	10	

(1) All typical values are at V_{CC} = 3.3 V or V_{CC} = 5 V, and T_A = 25°C.
(2) Test conditions are C1 – C4 = 0.1 μF at V_{CC} = 3.3 V ± 0.3 V; C1 = 0.047 μF, C2 – C4 = 0.33 μF at V_{CC} = 5 V ± 0.5 V.

Copyright © 2022 Texas Instruments Incorporated

6.7 Electrical Characteristics: Driver

over recommended ranges of supply voltage and operating free-air temperature (unless otherwise noted)

PARAMETER		TEST CONDITIONS(3)			MIN	TYP(1)	MAX	UNIT
V_{OH}	High-level output voltage	All DOUT at R_L = 3 kΩ to GND			5	5.4		V
V_{OL}	Low-level output voltage	All DOUT at R_L = 3 kΩ to GND				–5.4	-5	V
V_O	Output voltage (mouse driveability)	DIN1 = DIN2 = GND, DIN3 = V_{CC}, 3-kΩ to GND at DOUT3, DOUT1 = DOUT2 = 2.5 mA			±5			V
I_{IH}	High-level input current	$V_I = V_{CC}$				±0.01	±1	μA
I_{IL}	Low-level input current	V_I = GND				±0.01	±1	μA
I_{OS}	Short-circuit output current(2)	V_{CC} = 3.6 V,	V_O = 0 V			±35	±60	mA
		V_{CC} = 5.5 V,	V_O = 0 V					
r_o	Output resistance	V_{CC}, V+, and V– = 0 V,	V_O = ±2 V		300	10M		Ω
I_{off}	Output leakage current	$\overline{FORCEOFF}$ = GND	V_O = ±12 V,	V_{CC} = 3 V to 3.6 V			±25	μA
			V_O = ±10 V,	V_{CC} = 4.5 V to 5.5 V			±25	

(1) All typical values are at V_{CC} = 3.3 V or V_{CC} = 5 V, and T_A = 25°C.
(2) Short-circuit durations should be controlled to prevent exceeding the device absolute power dissipation ratings, and not more than one output should be shorted at a time.
(3) Test conditions are C1 – C4 = 0.1 μF at V_{CC} = 3.3 V ± 0.3 V; C1 = 0.047 μF, C2 – C4 = 0.33 μF at V_{CC} = 5 V ± 0.5 V.

6.8 Switching Characteristics: Driver

over recommended ranges of supply voltage and operating free-air temperature (unless otherwise noted)

PARAMETER		TEST CONDITIONS(3)			MIN	TYP(1)	MAX	UNIT
	Maximum data rate (see 图 7-1)	R_L = 3 kΩ, One DOUT switching	C_L = 1000 pF		250			kbit/s
			C_L = 250 pF,	V_{CC} = 3 V to 4.5 V	1000			
			C_L = 1000 pF,	V_{CC} = 4.5 V to 5.5 V	1000			
$t_{sk(p)}$	Pulse skew(2)	C_L = 150 pF to 2500 pF,	R_L = 3 kΩ to 7 kΩ,	See 图 7-2		25		ns
SR(tr)	Slew rate, transition region (see 图 7-1)	C_L = 150 pF to 1000 pF,	R_L = 3 kΩ to 7 kΩ,	V_{CC} = 3.3 V	18		150	V/μs

(1) All typical values are at V_{CC} = 3.3 V or V_{CC} = 5 V, and T_A = 25°C.
(2) Pulse skew is defined as $|t_{PLH} - t_{PHL}|$ of each channel of the same device.
(3) Test conditions are C1 – C4 = 0.1 μF at V_{CC} = 3.3 V ± 0.3 V; C1 = 0.047 μF, C2 – C4 = 0.33 μF at V_{CC} = 5 V ± 0.5 V.

6.9 Electrical Characteristics: Receiver

over recommended ranges of supply voltage and operating free-air temperature (unless otherwise noted)

PARAMETER		TEST CONDITIONS(2)	MIN	TYP(1)	MAX	UNIT
V_{OH}	High-level output voltage	I_{OH} = –1 mA	V_{CC} – 0.6	V_{CC} – 0.1		V
V_{OL}	Low-level output voltage	I_{OL} = 1.6 mA			0.4	V
V_{IT+}	Positive-going input threshold voltage	V_{CC} = 3.3 V		1.6	2.4	V
		V_{CC} = 5 V		1.9	2.4	
V_{IT-}	Negative-going input threshold voltage	V_{CC} = 3.3 V	0.6	1.1		V
		V_{CC} = 5 V	0.8	1.4		
V_{hys}	Input hysteresis ($V_{IT+} - V_{IT-}$)			0.5		V
I_{off}	Output leakage current (except ROUT2B)	$\overline{FORCEOFF}$ = 0 V		±0.05	±10	μA
r_i	Input resistance	V_I = ±3 V to ±25 V	3	5	7	kΩ

(1) All typical values are at V_{CC} = 3.3 V or V_{CC} = 5 V, and T_A = 25°C.

Copyright © 2022 Texas Instruments Incorporated

(2) Test conditions are C1 – C4 = 0.1 μF at V_{CC} = 3.3 V ± 0.3 V; C1 = 0.047 μF, C2 – C4 = 0.33 μF at V_{CC} = 5 V ± 0.5 V.

6.10 Switching Characteristics: Receiver

over recommended ranges of supply voltage and operating free-air temperature (unless otherwise noted)

PARAMETER		TEST CONDITIONS(3)	TYP(1)	UNIT
t_{PLH}	Propagation delay time, low- to high-level output	C_L = 150 pF, See 图 7-3	150	ns
t_{PHL}	Propagation delay time, high- to low-level output	C_L = 150 pF, See 图 7-3	150	ns
t_{en}	Output enable time	C_L = 150 pF, R_L = 3 kΩ, See 图 7-4	200	ns
t_{dis}	Output disable time	C_L = 150 pF, R_L = 3 kΩ, See 图 7-4	200	ns
$t_{sk(p)}$	Pulse skew(2)	See 图 7-3	50	ns

(1) All typical values are at V_{CC} = 3.3 V or V_{CC} = 5 V, and T_A = 25°C.
(2) Pulse skew is defined as $|t_{PLH} - t_{PHL}|$ of each channel of the same device.
(3) Test conditions are C1 – C4 = 0.1 μF at V_{CC} = 3.3 V ± 0.3 V; C1 = 0.047 μF, C2 – C4 = 0.33 μF at V_{CC} = 5 V ± 0.5 V.

6.11 Electrical Characteristics: Auto-Powerdown

over recommended ranges of supply voltage and operating free-air temperature (unless otherwise noted) (see 图 7-5)

PARAMETER		TEST CONDITIONS	MIN	MAX	UNIT
$V_{T+(valid)}$	Receiver input threshold for $\overline{INVALID}$ high-level output voltage	FORCEON = GND, $\overline{FORCEOFF}$ = V_{CC}		2.7	V
$V_{T-(valid)}$	Receiver input threshold for $\overline{INVALID}$ high-level output voltage	FORCEON = GND, $\overline{FORCEOFF}$ = V_{CC}	–2.7		V
$V_{T(invalid)}$	Receiver input threshold for $\overline{INVALID}$ low-level output voltage	FORCEON = GND, $\overline{FORCEOFF}$ = V_{CC}	–0.3	0.3	V
V_{OH}	$\overline{INVALID}$ high-level output voltage	I_{OH} = –1 mA, FORCEON = GND, $\overline{FORCEOFF}$ = V_{CC}	V_{CC} – 0.6		V
V_{OL}	$\overline{INVALID}$ low-level output voltage	I_{OL} = 1.6 mA, FORCEON = GND, $\overline{FORCEOFF}$ = V_{CC}		0.4	V

6.12 Switching Characteristics: Auto-Powerdown

over recommended ranges of supply voltage and operating free-air temperature (unless otherwise noted) (see 图 7-5)

PARAMETER		TYP(1)	UNIT
t_{valid}	Propagation delay time, low- to high-level output	1	μs
$t_{invalid}$	Propagation delay time, high- to low-level output	30	μs
t_{en}	Supply enable time	100	μs

(1) All typical values are at V_{CC} = 3.3 V or V_{CC} = 5 V, and T_A = 25°C.

Copyright © 2022 Texas Instruments Incorporated

Parameter Measurement Information

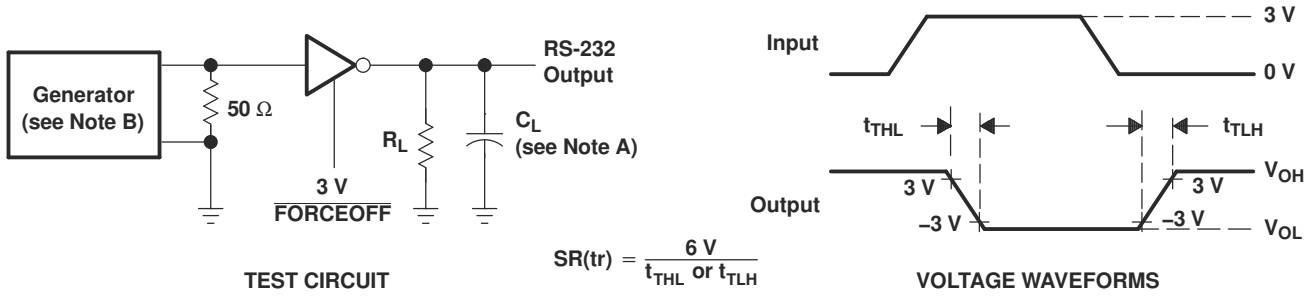

NOTES: A. C_L includes probe and jig capacitance.
B. The pulse generator has the following characteristics: PRR = 1 Mbit/s, Z_O = 50 Ω, 50% duty cycle, $t_r \le 10$ ns, $t_f \le 10$ ns.

图 7-1. Driver Slew Rate

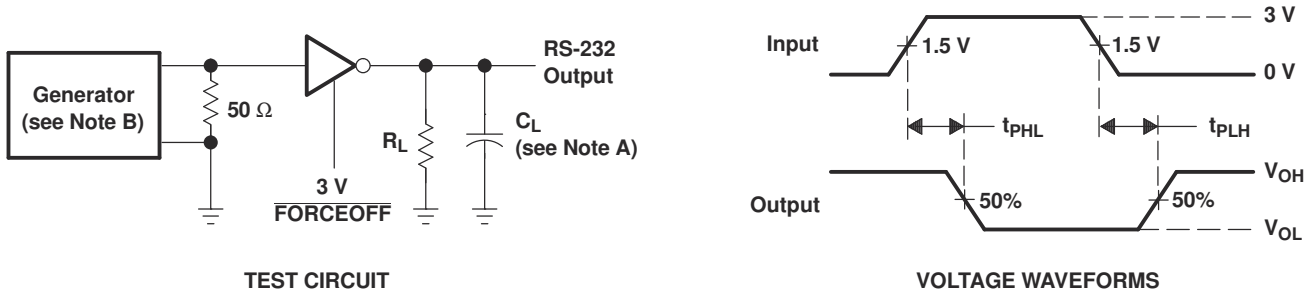

NOTES: A. C_L includes probe and jig capacitance.
B. The pulse generator has the following characteristics: PRR = 1 Mbit/s, Z_O = 50 Ω, 50% duty cycle, $t_r \le 10$ ns, $t_f \le 10$ ns.

图 7-2. Driver Pulse Skew

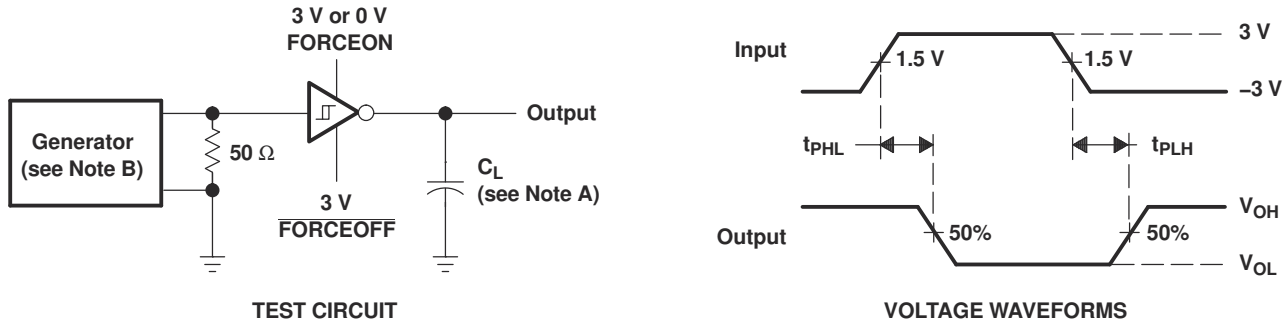

NOTES: A. C_L includes probe and jig capacitance.
B. The pulse generator has the following characteristics: Z_O = 50 Ω, 50% duty cycle, $t_r \le 10$ ns, $t_f \le 10$ ns.

图 7-3. Receiver Propagation Delay Times

Copyright © 2022 Texas Instruments Incorporated

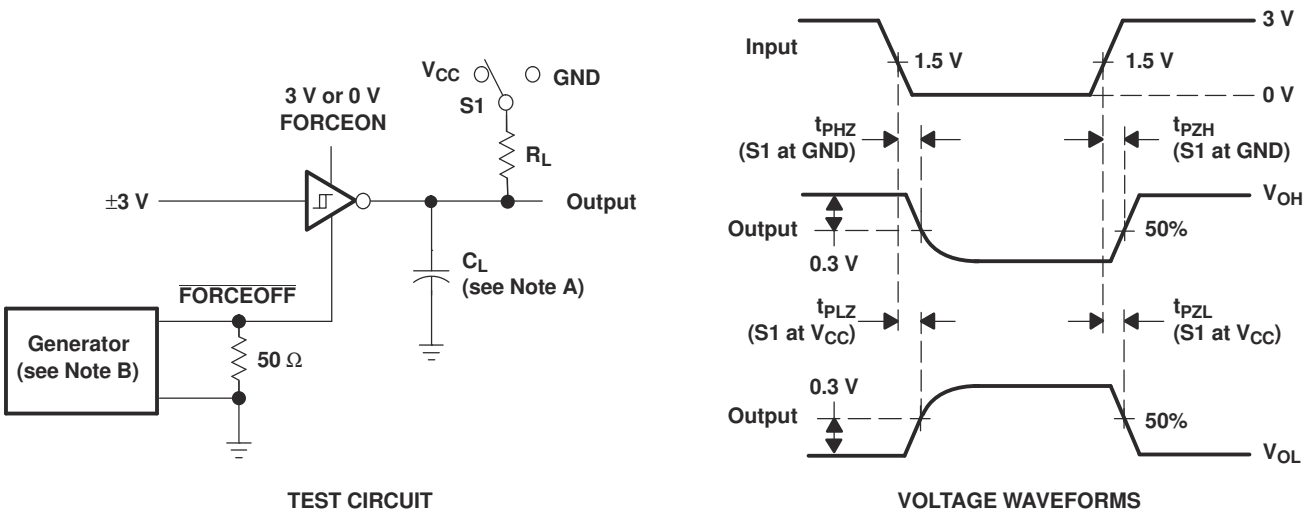

NOTES: A. C_L includes probe and jig capacitance.
B. The pulse generator has the following characteristics: Z_O = 50 Ω, 50% duty cycle, $t_r \le 10$ ns, $t_f \le 10$ ns.
C. t_{PLZ} and t_{PHZ} are the same as t_{dis}.
D. t_{PZL} and t_{PZH} are the same as t_{en}.

图 7-4. Receiver Enable and Disable Times

Copyright © 2022 Texas Instruments Incorporated

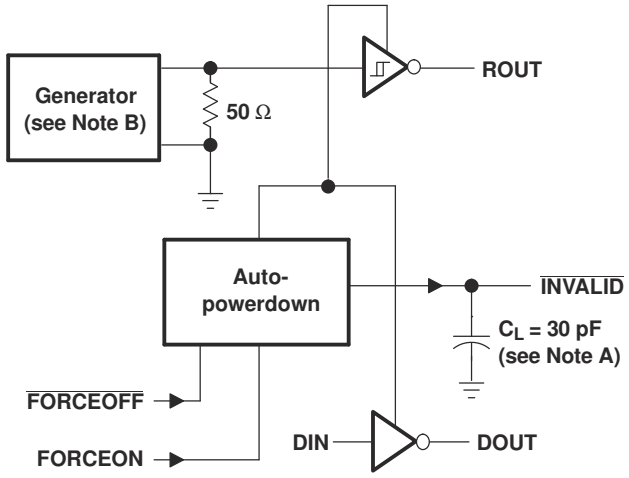

TEST CIRCUIT

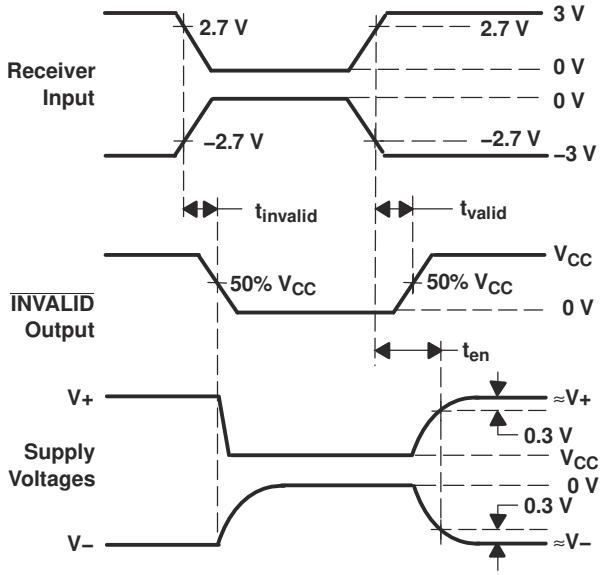

VOLTAGE WAVEFORMS

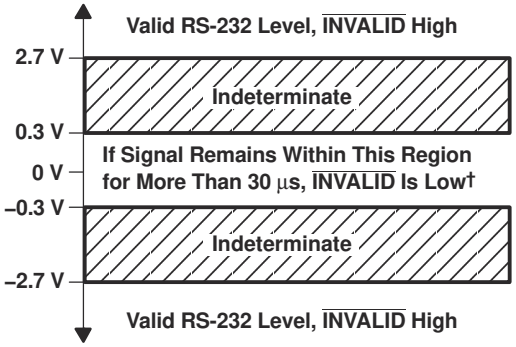

† Auto-powerdown disables drivers and reduces supply current to 1 µA.

NOTES: A. C_L includes probe and jig capacitance.
B. The pulse generator has the following characteristics: PRR = 5 kbit/s, Z_O = 50 Ω, 50% duty cycle, $t_r \le 10$ ns, $t_f \le 10$ ns.

图 7-5. INVALID Propagation Delay Times and Supply Enabling Time

Copyright © 2022 Texas Instruments Incorporated

7 Detailed Description

7.1 Overview

The TRSF3243E device consists of three line drivers, five line receivers, and a dual charge-pump circuit with ±15-kV ESD (HBM and IEC61000-4-2, Air-Gap Discharge) and ±8-kV ESD (IEC61000-4-2, Contact Discharge) protection on serial-port connection pins. The device meets the requirements of TIA/EIA-232-F and provides the electrical interface between an asynchronous communication controller and the serial-port connector.

The charge pump and four small external capacitors allow operation from a single 3-V to 5.5-V supply. In addition, the device includes an always-active noninverting output (ROUT2B), which allows applications using the ring indicator to transmit data while the device is powered down. The device operates at data signaling rates up to 500 kbit/s and a maximum of 30-V/μs driver output slew rate.

Functional Block Diagram

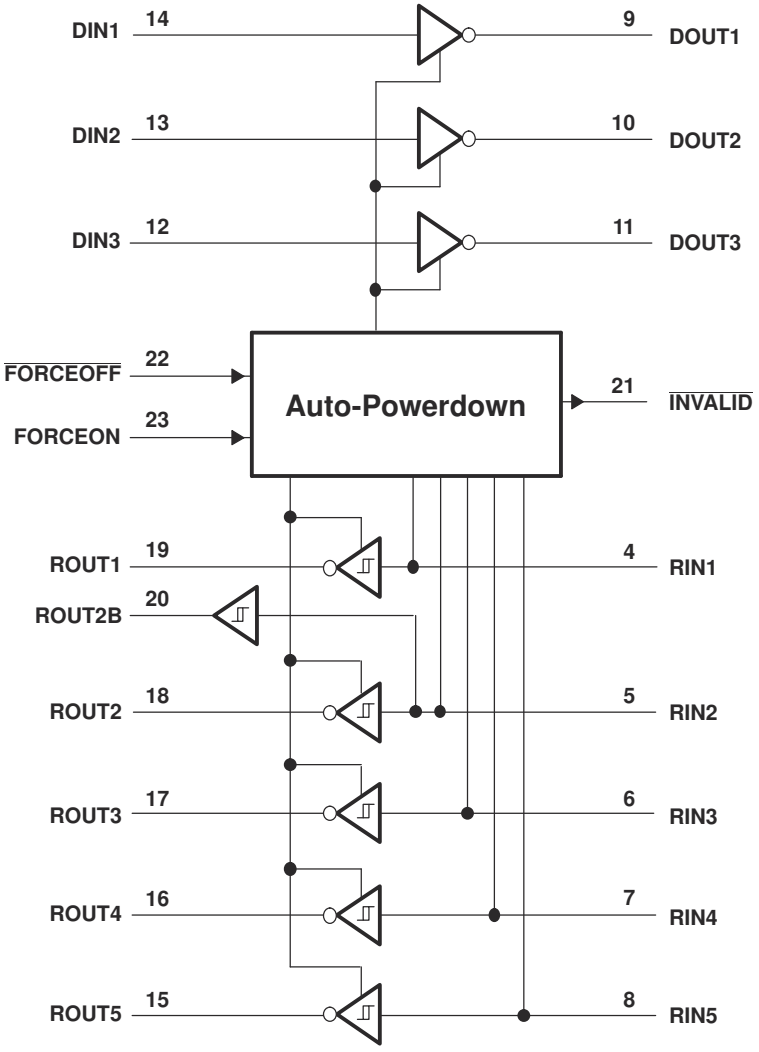

图 7-1. Logic Diagram

Copyright © 2022 Texas Instruments Incorporated

7.2 Feature Description

Auto-powerdown can be disabled when FORCEON and $\overline{\text{FORCEOFF}}$ are high and should be done when driving a serial mouse. With auto-powerdown enabled, the device is activated automatically when a valid signal is applied to any receiver input. The $\overline{\text{INVALID}}$ output is used to notify the user if an RS-232 signal is present at any receiver input. $\overline{\text{INVALID}}$ is high (valid data) if any receiver input voltage is greater than 2.7 V or less than –2.7 V or has been between –0.3 V and 0.3 V for less than 30 µs. $\overline{\text{INVALID}}$ is low (invalid data) if all receiver input voltages are between –0.3 V and 0.3 V for more than 30 µs. Refer to 图 7-5 for receiver input levels.

7.3 Device Functional Modes

表 7-1 through 表 7-3 show the device functional modes.

表 7-1. Each Driver

INPUTS(1)				OUTPUT	DRIVER STATUS
DIN	FORCEON	$\overline{\text{FORCEOFF}}$	VALID RIN RS-232 LEVEL	DOUT	
X	X	L	X	Z	Powered off
L	H	H	X	H	Normal operation with auto-powerdown disabled
H	H	H	X	L	
L	L	H	Yes	H	Normal operation with auto-powerdown enabled
H	L	H	Yes	L	
X	L	H	No	Z	Powered off by auto-powerdown feature

(1) H = high level, L = low level, X = irrelevant, Z = high impedance

表 7-2. Each Receiver

INPUTS(1)			OUTPUT	RECEIVER STATUS
RIN	FORCEON	$\overline{\text{FORCEOFF}}$	ROUT	
X	X	L	Z	Powered off
L	X	H	H	Normal operation with auto-powerdown disabled/enabled
H	X	H	L	
Open	X	H	H	

(1) H = high level, L = low level, X = irrelevant, Z = high impedance (off), Open = input disconnected or connected driver off

表 7-3. ROUT2B And Outputs $\overline{\text{INVALID}}$

INPUTS(1)				OUTPUTS		OUTPUT STATUS
VALID RIN RS-232 LEVEL	RIN2	FORCEON	$\overline{\text{FORCEOFF}}$	$\overline{\text{INVALID}}$	ROUT2B	
Yes	L	X	X	H	L	Always active
Yes	H	X	X	H	H	
Yes	Open	X	X	H	L	
No	Open	X	X	L	L	

(1) H = high level, L = low level, X = irrelevant, Z = high impedance (off), Open = input disconnected or connected driver off

Copyright © 2022 Texas Instruments Incorporated

8 Application and Implementation

Note

以下应用部分中的信息不属于 TI 器件规格的范围，TI 不担保其准确性和完整性。TI 的客 户应负责确定器件是否适用于其应用。客户应验证并测试其设计，以确保系统功能。

8.1 Application Information

For proper operation, add capacitors as shown in 图 8-1. Pins 12 through 23 connect to UART or general-purpose logic lines. RS-232 lines on Pins 4 through 11 connect to a connector or cable.

8.2 Typical Application

Three driver and five receiver channels are supported for full duplex transmission with hardware flow control. The five 5-kΩ resistors are internal to the device.

Copyright © 2022 Texas Instruments Incorporated

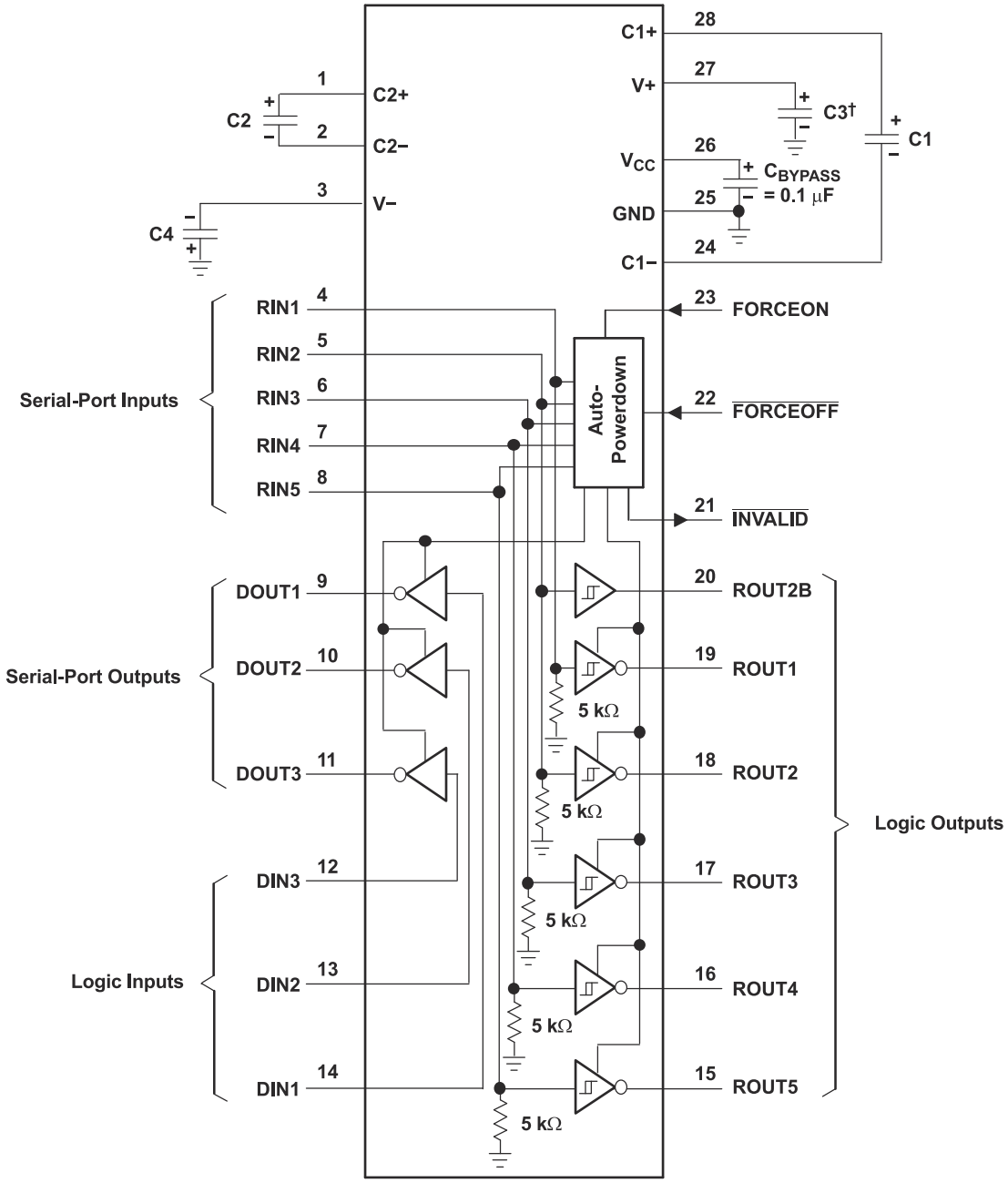

A. C3 can be connected to V_{CC} or GND
B. Resistor values shown are nominal.

图 8-1. Typical Operating Circuit and Capacitor Values

8.3 Design Requirements

For this design example, use the values in V_{CC} vs Capacitor Values.

- V_{CC} minimum is 3 V and maximum is 5.5 V.
- Maximum recommended bit rate is 1 Mbps.

表 8-1. V_{CC} vs Capacitor Values

V_{CC}	C1	C2, C3, and C4
3.3 V ± 0.3 V	0.1 µF	0.1 µF
5 V ± 0.5 V	0.047 µF	0.33 µF
3 V to 5.5 V	0.1 µF	0.47 µF

8.4 Detailed Design Procedure

TRSF3243E has integrated charge-pump that generates positive and negative rails needed for RS-232 signal levels. Main design requirement is that charge-pump capacitor terminals must be connected with recommended capacitor values. Charge-pump rail voltages and device supply pin must be properly bypassed with ceramic capacitors.

9 Power Supply Recommendations

The V_{CC} voltage must be connected to the same power source used for logic device connected to DIN and ROUT pins. V_{CC} must be between 3 V and 5.5 V.

Copyright © 2022 Texas Instruments Incorporated

10 Layout

10.1 Layout Guidelines

As shown in Layout Example, charge-pump and supply voltage capacitors must be located very close to device pins. Non-polarized ceramic capacitors are recommended. If polarized tantalum or electrolytic capacitors are used, they should be connected as per Typical Operating Circuit and Capacitor Values.

10.2 Layout Example

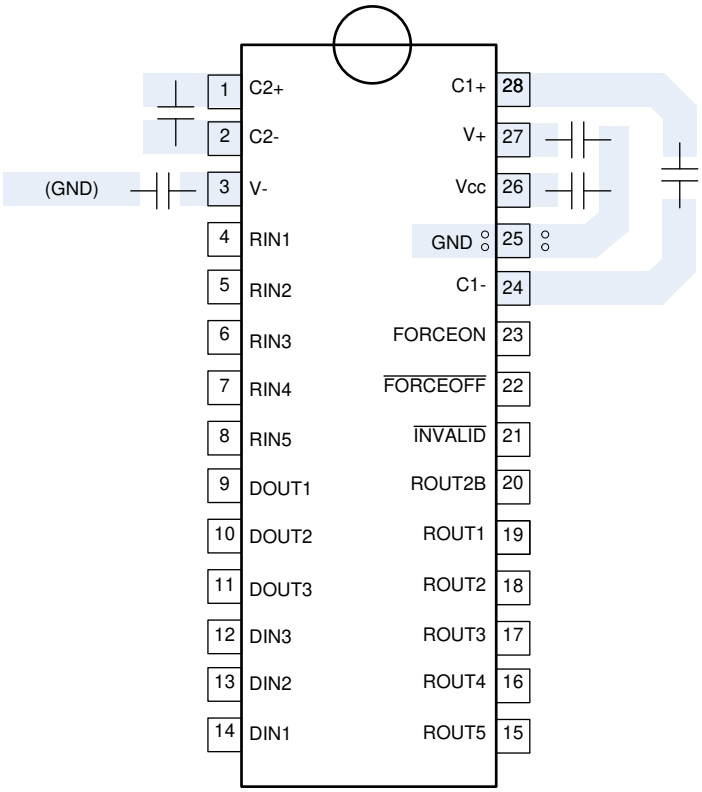

图 10-1. Example Layout

Copyright © 2022 Texas Instruments Incorporated

Device and Documentation Support

11.1 接收文档更新通知

要接收文档更新通知，请导航至 ti.com 上的器件产品文件夹。点击 *订阅更新* 进行注册，即可每周接收产品信息更改摘要。有关更改的详细信息，请查看任何已修订文档中包含的修订历史记录。

11.2 支持资源

TI E2E™ 支持论坛是工程师的重要参考资料，可直接从专家获得快速、经过验证的解答和设计帮助。搜索现有解答或提出自己的问题可获得所需的快速设计帮助。

链接的内容由各个贡献者“按原样”提供。这些内容并不构成 TI 技术规范，并且不一定反映 TI 的观点；请参阅 TI 的《使用条款》。

11.3 Trademarks

TI E2E™ is a trademark of Texas Instruments.
所有商标均为其各自所有者的财产。

11.4 Electrostatic Discharge Caution



This integrated circuit can be damaged by ESD. Texas Instruments recommends that all integrated circuits be handled with appropriate precautions. Failure to observe proper handling and installation procedures can cause damage.

ESD damage can range from subtle performance degradation to complete device failure. Precision integrated circuits may be more susceptible to damage because very small parametric changes could cause the device not to meet its published specifications.

11.5 术语表

TI 术语表　　本术语表列出并解释了术语、首字母缩略词和定义。

11 Mechanical, Packaging, and Orderable Information

The following pages include mechanical, packaging, and orderable information. This information is the most current data available for the designated devices. This data is subject to change without notice and revision of this document. For browser-based versions of this data sheet, refer to the left-hand navigation.

Copyright © 2022 Texas Instruments Incorporated

重要声明和免责声明

TI 提供技术和可靠性数据（包括数据表）、设计资源（包括参考设计）、应用或其他设计建议、网络工具、安全信息和其他资源，不保证没有瑕疵且不做出任何明示或暗示的担保，包括但不限于对适销性、某特定用途方面的适用性或不侵犯任何第三方知识产权的暗示担保。

这些资源可供使用 TI 产品进行设计的熟练开发人员使用。您将自行承担以下全部责任：(1) 针对您的应用选择合适的 TI 产品，(2) 设计、验证并测试您的应用，(3) 确保您的应用满足相应标准以及任何其他安全、安保或其他要求。这些资源如有变更，恕不另行通知。TI 授权您仅可将这些资源用于研发本资源所述的 TI 产品的应用。严禁对这些资源进行其他复制或展示。您无权使用任何其他 TI 知识产权或任何第三方知识产权。您应全额赔偿因在这些资源的使用中对 TI 及其代表造成的任何索赔、损害、成本、损失和债务，TI 对此概不负责。

TI 提供的产品受 TI 的销售条款 (https:www.ti.com/legal/termsofsale.html) 或 ti.com 上其他适用条款/TI 产品随附的其他适用条款的约束。TI 提供这些资源并不会扩展或以其他方式更改 TI 针对 TI 产品发布的适用的担保或担保免责声明。

邮寄地址：Texas Instruments, Post Office Box 655303, Dallas, Texas 75265
Copyright © 2021，德州仪器 (TI) 公司

PACKAGING INFORMATION

Orderable Device	Status (1)	Package Type	Package Drawing	Pins	Package Qty	Eco Plan (2)	Lead finish/ Ball material (6)	MSL Peak Temp (3)	Op Temp (°C)	Device Marking (4/5)	Samples
TRSF3243EIRHBR	ACTIVE	VQFN	RHB	32	5000	RoHS & Green	NIPDAU	Level-2-260C-1 YEAR	-40 to 85	TRSF 3243	Samples

(1) The marketing status values are defined as follows:
ACTIVE: Product device recommended for new designs.
LIFEBUY: TI has announced that the device will be discontinued, and a lifetime-buy period is in effect.
NRND: Not recommended for new designs. Device is in production to support existing customers, but TI does not recommend using this part in a new design.
PREVIEW: Device has been announced but is not in production. Samples may or may not be available.
OBSOLETE: TI has discontinued the production of the device.

(2) **RoHS:** TI defines "RoHS" to mean semiconductor products that are compliant with the current EU RoHS requirements for all 10 RoHS substances, including the requirement that RoHS substance do not exceed 0.1% by weight in homogeneous materials. Where designed to be soldered at high temperatures, "RoHS" products are suitable for use in specified lead-free processes. TI may reference these types of products as "Pb-Free".
RoHS Exempt: TI defines "RoHS Exempt" to mean products that contain lead but are compliant with EU RoHS pursuant to a specific EU RoHS exemption.
Green: TI defines "Green" to mean the content of Chlorine (Cl) and Bromine (Br) based flame retardants meet JS709B low halogen requirements of <=1000ppm threshold. Antimony trioxide based flame retardants must also meet the <=1000ppm threshold requirement.

(3) MSL, Peak Temp. - The Moisture Sensitivity Level rating according to the JEDEC industry standard classifications, and peak solder temperature.

(4) There may be additional marking, which relates to the logo, the lot trace code information, or the environmental category on the device.

(5) Multiple Device Markings will be inside parentheses. Only one Device Marking contained in parentheses and separated by a "~" will appear on a device. If a line is indented then it is a continuation of the previous line and the two combined represent the entire Device Marking for that device.

(6) Lead finish/Ball material - Orderable Devices may have multiple material finish options. Finish options are separated by a vertical ruled line. Lead finish/Ball material values may wrap to two lines if the finish value exceeds the maximum column width.

Important Information and Disclaimer: The information provided on this page represents TI's knowledge and belief as of the date that it is provided. TI bases its knowledge and belief on information provided by third parties, and makes no representation or warranty as to the accuracy of such information. Efforts are underway to better integrate information from third parties. TI has taken and continues to take reasonable steps to provide representative and accurate information but may not have conducted destructive testing or chemical analysis on incoming materials and chemicals. TI and TI suppliers consider certain information to be proprietary, and thus CAS numbers and other limited information may not be available for release.

In no event shall TI's liability arising out of such information exceed the total purchase price of the TI part(s) at issue in this document sold by TI to Customer on an annual basis.

GENERIC PACKAGE VIEW

RHB 32

VQFN - 1 mm max height

5 x 5, 0.5 mm pitch

PLASTIC QUAD FLATPACK - NO LEAD

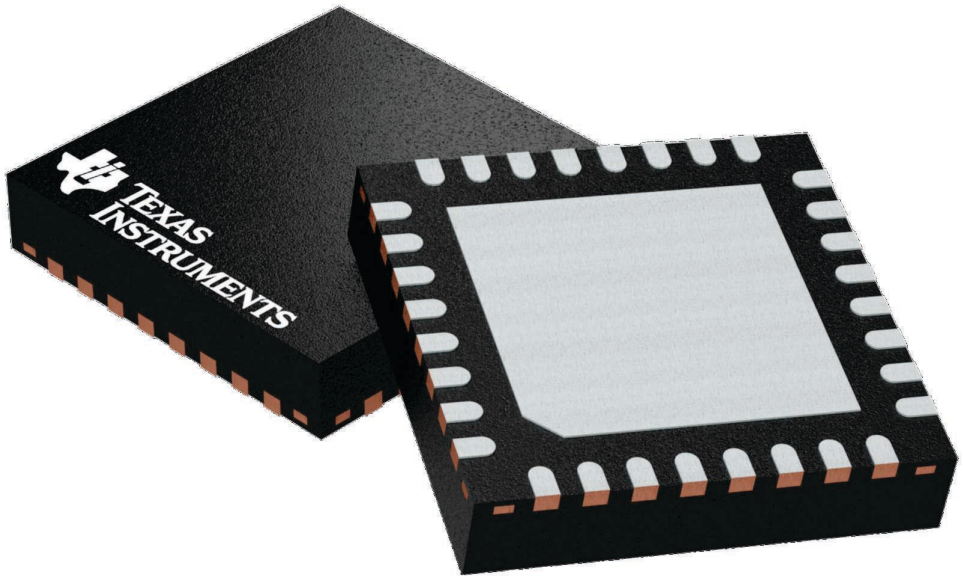

Images above are just a representation of the package family, actual package may vary.
Refer to the product data sheet for package details.

4224745/A

RHB0032E

PACKAGE OUTLINE

VQFN - 1 mm max height

PLASTIC QUAD FLATPACK - NO LEAD

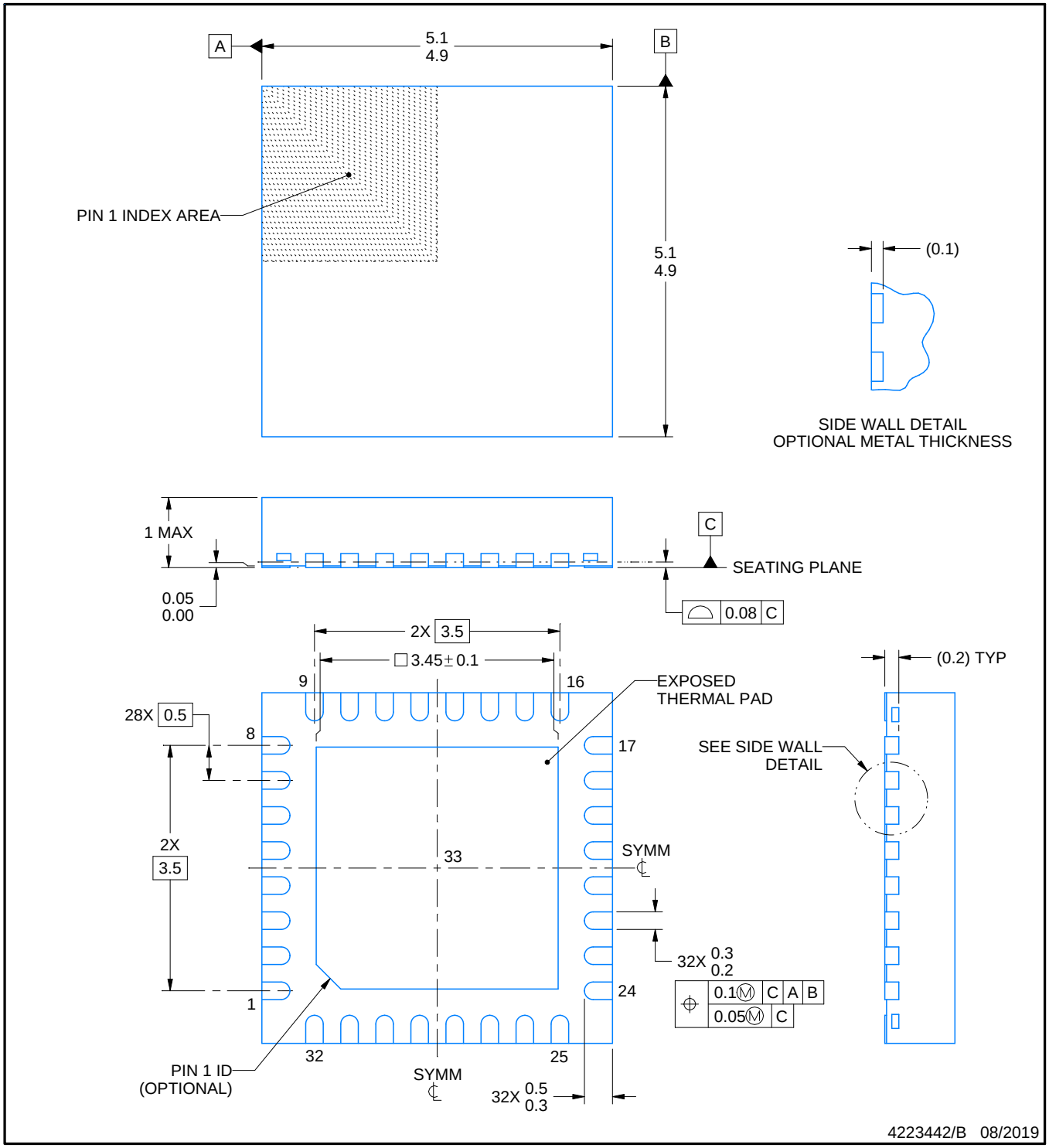

NOTES:

1. All linear dimensions are in millimeters. Any dimensions in parenthesis are for reference only. Dimensioning and tolerancing per ASME Y14.5M.
2. This drawing is subject to change without notice.
3. The package thermal pad must be soldered to the printed circuit board for thermal and mechanical performance.

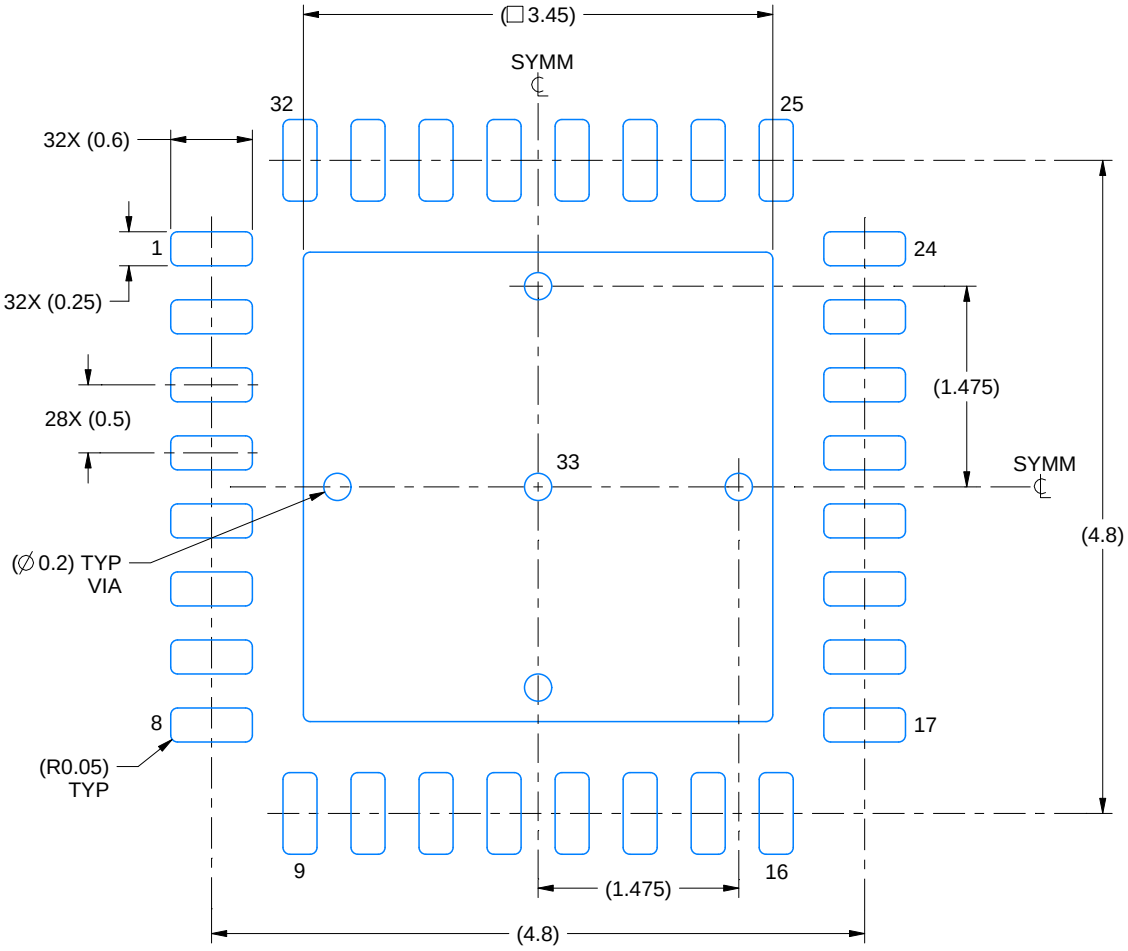

LAND PATTERN EXAMPLE
SCALE:18X

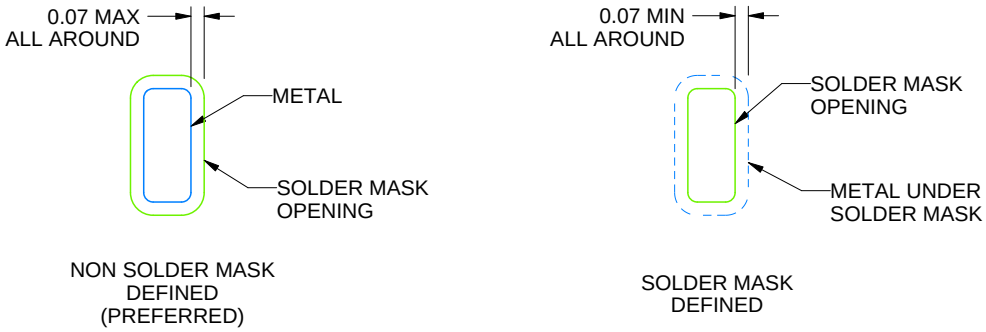

SOLDER MASK DETAILS

4223442/B 08/2019

NOTES: (continued)

4. This package is designed to be soldered to a thermal pad on the board. For more information, see Texas Instruments literature number SLUA271 (www.ti.com/lit/slua271).
5. Vias are optional depending on application, refer to device data sheet. If any vias are implemented, refer to their locations shown on this view. It is recommended that vias under paste be filled, plugged or tented.

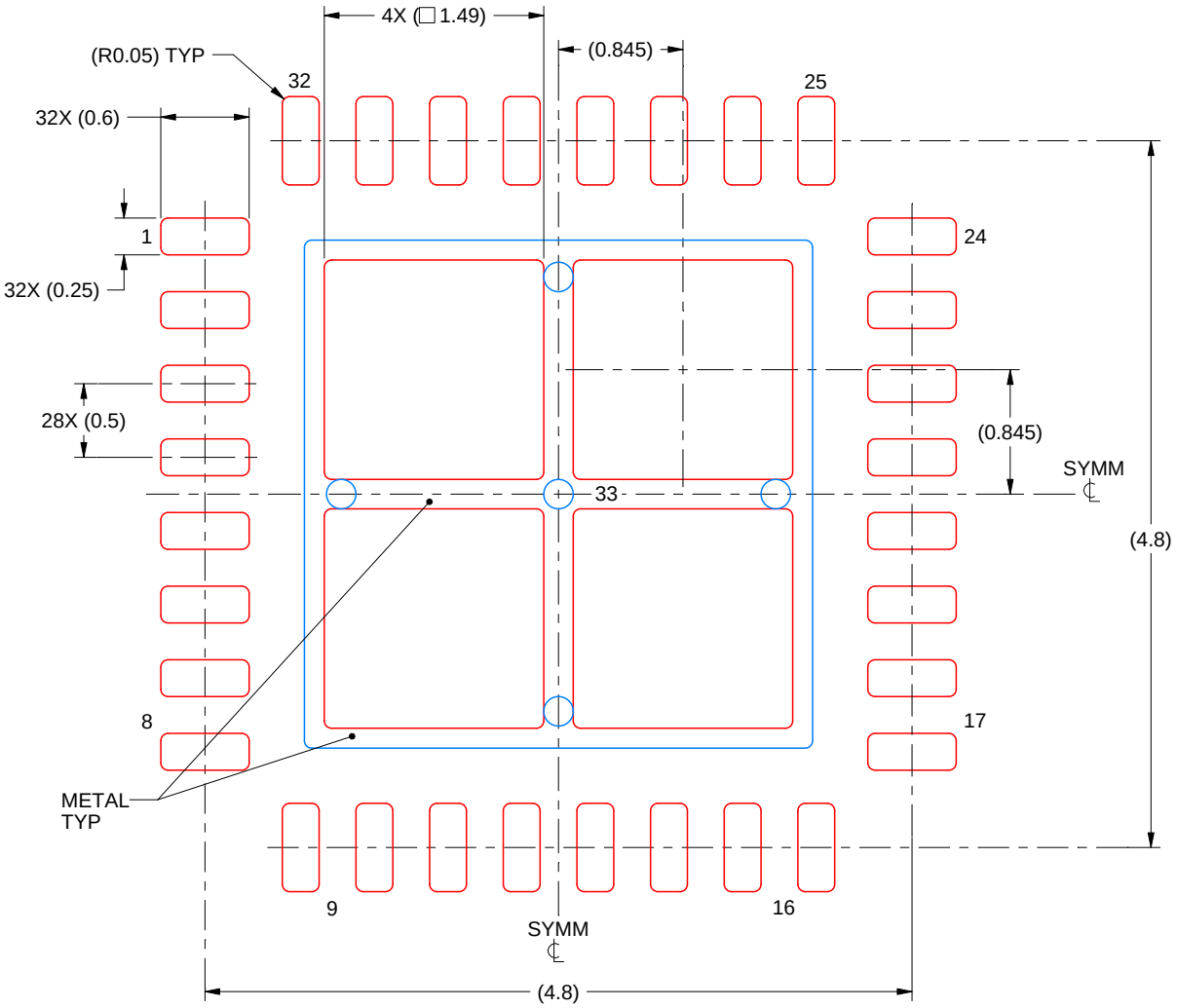

SOLDER PASTE EXAMPLE
BASED ON 0.125 mm THICK STENCIL

EXPOSED PAD 33:
75% PRINTED SOLDER COVERAGE BY AREA UNDER PACKAGE
SCALE:20X

4223442/B 08/2019

NOTES: (continued)

6. Laser cutting apertures with trapezoidal walls and rounded corners may offer better paste release. IPC-7525 may have alternate design recommendations.

重要声明和免责声明

TI“按原样”提供技术和可靠性数据（包括数据表）、设计资源（包括参考设计）、应用或其他设计建议、网络工具、安全信息和其他资源，不保证没有瑕疵且不做出任何明示或暗示的担保，包括但不限于对适销性、某特定用途方面的适用性或不侵犯任何第三方知识产权的暗示担保。

这些资源可供使用 TI 产品进行设计的熟练开发人员使用。您将自行承担以下全部责任：(1) 针对您的应用选择合适的 TI 产品，(2) 设计、验证并测试您的应用，(3) 确保您的应用满足相应标准以及任何其他功能安全、信息安全、监管或其他要求。

这些资源如有变更，恕不另行通知。TI 授权您仅可将这些资源用于研发本资源所述的 TI 产品的应用。严禁对这些资源进行其他复制或展示。您无权使用任何其他 TI 知识产权或任何第三方知识产权。您应全额赔偿因在这些资源的使用中对 TI 及其代表造成的任何索赔、损害、成本、损失和债务，TI 对此概不负责。

TI 提供的产品受 TI 的销售条款或 ti.com 上其他适用条款/TI 产品随附的其他适用条款的约束。TI 提供这些资源并不会扩展或以其他方式更改 TI 针对 TI 产品发布的适用的担保或担保免责声明。

TI 反对并拒绝您可能提出的任何其他或不同的条款。

邮寄地址：Texas Instruments, Post Office Box 655303, Dallas, Texas 75265
Copyright © 2022，德州仪器 (TI) 公司