LOW-VOLTAGE I/O TOUCH SCREEN CONTROLLER

Check for Samples: TSC2046E-Q1

FEATURES

- **Qualified for Automotive Applications**
- **Same Pinout as ADS7846**
- **2.2-V to 5.25-V Operation**
- **1.5-V to 5.25-V Digital I/O**
- **Internal 2.5-V Reference**
- **Direct Battery Measurement (0 V to 6 V)**
- **On-Chip Temperature Measurement**
- **Touch-Pressure Measurement**
- **QSPI™ and SPI™ 3-Wire Interface**
- **Auto Power-Down**
- **Exceeds IEC 61000-4-2 ESD Requirements**
  - **±15kV Contact Discharge**
  - **No External Components Needed**
- **Available In a TSSOP-16 (PW) Package**

APPLICATIONS

- **Touch Screen Monitors**

PW PACKAGE (TOP VIEW)

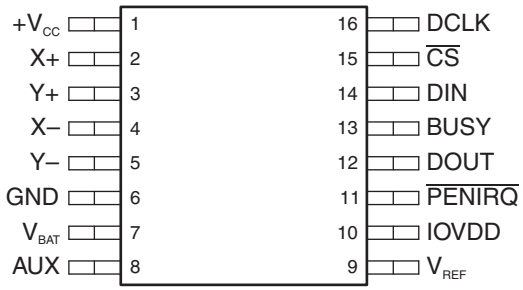

DESCRIPTION

The TSC2046E is the next-generation version of the ADS7846 4-wire touch screen controller, supporting a low-voltage I/O interface from 1.5 V to 5.25 V. The TSC2046E is 100% pin-compatible with the existing ADS7846, and drops into the same socket. This design allows for an easy upgrade of current applications to the new version. The TSC2046E also has an on-chip 2.5-V reference that can be used for the auxiliary input, battery monitor, and temperature measurement modes. The reference can also be powered down when not used to conserve power. The internal reference operates down to a supply voltage of 2.7 V, while monitoring the battery voltage from 0 V to 6 V.

The low power consumption of less than 0.75 mW (typ) at 2.7 V (reference off), high-speed (up to 125-kHz sample rate), and on-chip drivers make the TSC2046E an ideal choice for battery-operated systems such as personal digital assistants (PDAs) with resistive touch screens, pagers, cellular phones, and other portable equipment. The TSC2046E is available in a TSSOP-16 package and is specified over the -40°C to +125°C temperature range.

ORDERING INFORMATION(1)

T_A	PACKAGE		ORDERABLE PART NUMBER	TOP-SIDE MARKING
-40°C to 125°C	TSSOP - PW	Reel of 2000	TSC2046EQPWRQ1	T2046EQ

(1) For the most current package and ordering information, see the Package Option Addendum at the end of this document, or see the TI web site at www.ti.com.

Please be aware that an important notice concerning availability, standard warranty, and use in critical applications of Texas Instruments semiconductor products and disclaimers thereto appears at the end of this data sheet.

QSPI, SPI are trademarks of Motorola Inc.
Microwire is a trademark of National Semiconductor Corporation.
All other trademarks are the property of their respective owners.

PRODUCTION DATA information is current as of publication date. Products conform to specifications per the terms of the Texas Instruments standard warranty. Production processing does not necessarily include testing of all parameters.

Copyright © 2010, Texas Instruments Incorporated

This integrated circuit can be damaged by ESD. Texas Instruments recommends that all integrated circuits be handled with appropriate precautions. Failure to observe proper handling and installation procedures can cause damage.

ESD damage can range from subtle performance degradation to complete device failure. Precision integrated circuits may be more susceptible to damage because very small parametric changes could cause the device not to meet its published specifications.

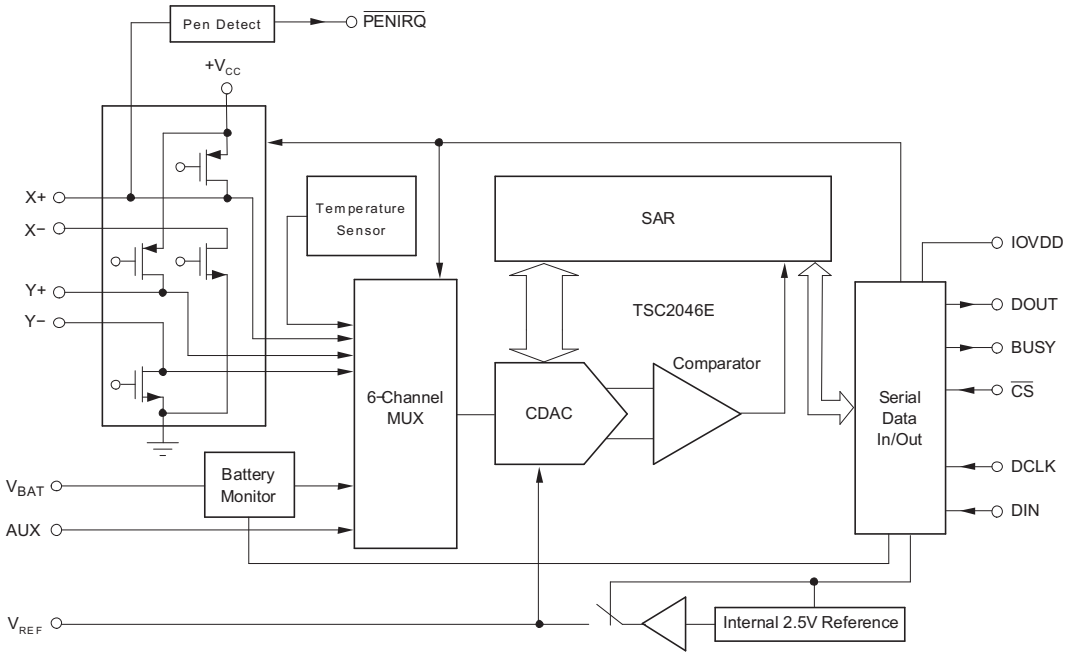

TERMINAL FUNCTIONS

TERMINAL		DESCRIPTION
NAME	NO.	
$+V_{CC}$	1	Power supply
X+	2	X+ position input
Y+	3	Y+ position input
X-	4	X- position input
Y-	5	Y- position input
GND	6	Ground
V_{BAT}	7	Battery monitor input
AUX	8	Auxiliary input to ADC
V_{REF}	9	Voltage reference input/output
IOVDD	10	Digital I/O power supply
$\overline{PENIRQ}$	11	Pen interrupt
DOUT	12	Serial data output. Data are shifted on the falling edge of DCLK. This output is high impedance when $\overline{CS}$ is high.
BUSY	13	Busy output. This output is high impedance when $\overline{CS}$ is high.
DIN	14	Serial data input. If $\overline{CS}$ is low, data sre latched on the rising edge of DCLK.
$\overline{CS}$	15	Chip select input. Controls conversion timing and enables the serial input/output register. $\overline{CS}$ high = power-down mode (ADC only).
DCLK	16	External clock input. This clock runs the SAR conversion process and synchronizes serial data I/O.

Copyright © 2010, Texas Instruments Incorporated

ABSOLUTE MAXIMUM RATINGS(1) (2)

over operating free-air temperature range (unless otherwise noted)

V_{CC}	Supply voltage range	$+V_{CC}$, IOVDD	-0.3 V to 6 V
V_I	Input voltage range	Digital inputs	-0.3 V to $+V_{CC}$ + 0.3 V
		Analog inputs	-0.3 V to $+V_{CC}$ + 0.3 V
P_D	Power dissipation		250 mW
θ_{JA}	Package thermal impedance, junction to free air		108.4°C
T_A	Operating free-air temperature range		-40°C to 125°C
T_J	Maximum junction temperature		150°C
T_{stg}	Storage temperature range		-65°C to 150°C
	IEC Contact Discharge(3)	X+, X-, Y+, Y-	±15kV

(1) Stresses beyond those listed under *absolute maximum ratings* may cause permanent damage to the device. These are stress ratings only, and functional operation of the device at these or any other conditions beyond those indicated under *recommended operating conditions* is not implied. Exposure to absolute-maximum-rated conditions for extended periods may affect device reliability.
(2) All voltages are referenced to GND.
(3) Test method based on IEC Std 61000-4-2. Contact Texas Instruments for test details.

ELECTRICAL CHARACTERISTICS

T_A = -40°C to 125°C, $+V_{CC}$ = 2.7V, V_{REF} = 2.5V internal voltage, f_{SAMPLE} = 125kHz, f_{CLK} = 16 × f_{SAMPLE} = 2MHz, 12-bit mode, digital inputs = GND or IOVDD, $+V_{CC}$ ≥ IOVDD (unless otherwise noted)

PARAMETER		TEST CONDITIONS	MIN	TYP	MAX	UNIT
Analog Input						
V_I	Full-scale input voltage span	Positive Input-Negative Input	0		V_{REF}	V
V_I	Absolute input voltage	Positive Input	-0.2		$+V_{CC}$ + 0.2	V
		Negative Input	-0.2		+0.2	
C_i	Capacitance			25		pF
I_{leak}	Leakage current			0.1		µA
System Performance						
	Resolution			12		bits
	No missing codes		11			bits
	Integral linearity error				±2	LSB(1)
	Offset error				±6	LSB
	Gain error	External V_{REF}			±4	LSB
V_n	Noise	Including internal V_{REF}, RMS		70		µV
PSRR	Power-supply rejection ratio			70		dB
Sampling Dynamics						
	Conversion time				12	CLK cycles
	Acquisition time		3			CLK cycles
	Throughput rate				125	kHz
	Multiplexer settling time			500		ns
	Aperture delay			30		ns
	Aperture jitter			100		ns
	Channel-to-channel isolation	V_{IN} = 2.5 V_{pp} at 50 kHz		100		dB
Switch Drivers						
	Y+, X+ on-resistance			5		Ω
	Y-, X- on-resistance			6		Ω
	Drive current(2)	Duration 100 ms			50	mA

(1) LSB = least significant bit. With V_{REF} equal to 2.5 V, one LSB is 610 µV.
(2) Specified by design. Exceeding 50-mA source current may result in device degradation.

Copyright © 2010, Texas Instruments Incorporated

ELECTRICAL CHARACTERISTICS (continued)

T_A = -40°C to 125°C, $+V_{CC}$ = 2.7V, V_{REF} = 2.5V internal voltage, f_{SAMPLE} = 125kHz, f_{CLK} = 16 × f_{SAMPLE} = 2MHz, 12-bit mode, digital inputs = GND or IOVDD, $+V_{CC}$ ≥ IOVDD (unless otherwise noted)

PARAMETER		TEST CONDITIONS	MIN	TYP	MAX	UNIT
Reference Output						
	Internal reference voltage		2.45	2.50	2.55	V
	Internal reference drift			15		ppm/°C
I_Q	Quiescent current	PD1 = 1, PD0 = 0, SDA and SCL high		500		µA
Reference Input						
V_I	Input voltage		1		$+V_{CC}$	V
	Input impedance	SER/$\overline{DFR}$ = 0, PD1 = 0, Internal reference off		1		GΩ
		Internal reference on		250		Ω
Battery Monitor						
V_I	Input voltage		0.5		6	V
Z_I	Input impedance	Sampling battery		10		kΩ
		Battery monitor off		1		GΩ
	Accuracy	V_{BAT} = 0.5 V to 5.5 V, External V_{REF} = 2.5 V	-2		+2	%
		V_{BAT} = 0.5 V to 5.5 V, Internal reference	-3		+3	
Temperature Measurement						
	Temperature range		-40		125	°C
	Resolution	Differential method(3)		1.6		°C
		TEMP0(4)		0.3		
	Accuracy	Differential method(3)		±2		°C
		TEMP0(4)		±3		
Digital Input/Output						
V_{IH}	High-level input voltage	$\lvert I_{IH} \rvert$ ≤ 5 µA	0.7 × IOVDD		IOVDD + 0.3	V
V_{IL}	Low-level input voltage	$\lvert I_{IL} \rvert$ ≤ 5 µA	-0.3		0.3 × IOVDD	V
V_{OH}	High-level output voltage	I_{OH} = -250 µA	0.8 × IOVDD			V
V_{OL}	Low-level output voltage	I_{OL} = 250 µA			0.4	V
C_i	Input capacitance	All digital control input pins		5	15	pF
Power Supply Requirements						
$+V_{CC}$	Supply voltage(5)	Specified performance	2.7		3.6	V
		Operating range	2.5		5.25	
IOVDD	Supply voltage(6)		1.5		$+V_{CC}$	V
I_Q	Quiescent current	Internal reference off		280	650	µA
		Internal reference on		970		
		f_{SAMPLE} = 12.5 kHz		220		
		Power-down mode, $\overline{CS}$ = DCLK = DIN = IOVDD		10	28	
P_D	Power dissipation	$+V_{CC}$ = 2.7 V			1.8	mW
Temperature Range						
T_A	Operating free-air temperature	Specified performance	-40		125	°C

(3) Difference between TEMP0 and TEMP1 measurement. No calibration necessary.
(4) Temperature drift is -2.1 mV/°C.s
(5) TSC2046E operates down to 2.2V.
(6) IOVDD must be ≤ $+V_{CC}$.

Copyright © 2010, Texas Instruments Incorporated

TYPICAL CHARACTERISTICS

At T_A = +25°C, $+V_{CC}$ = +2.7V, IOVDD = +1.8V, V_{REF} = External +2.5V, 12-bit mode, PD0 = 0, f_{SAMPLE} = 125kHz, f_{CLK} = 16 × f_{SAMPLE} = 2MHz (unless otherwise noted)

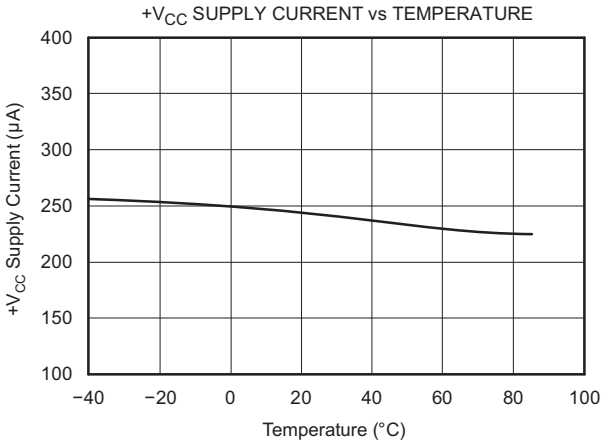

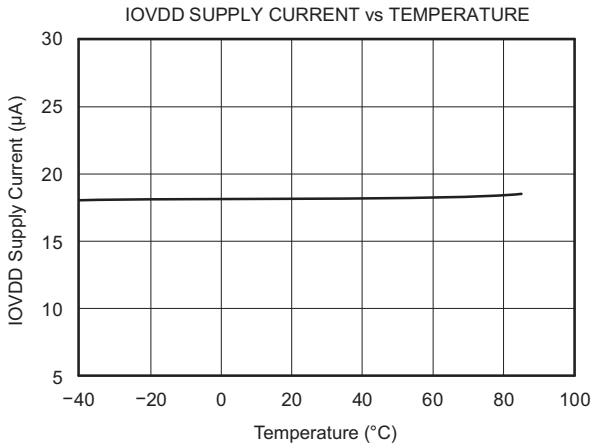

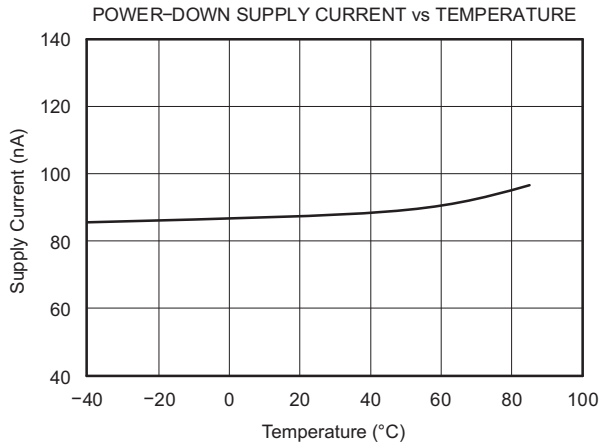

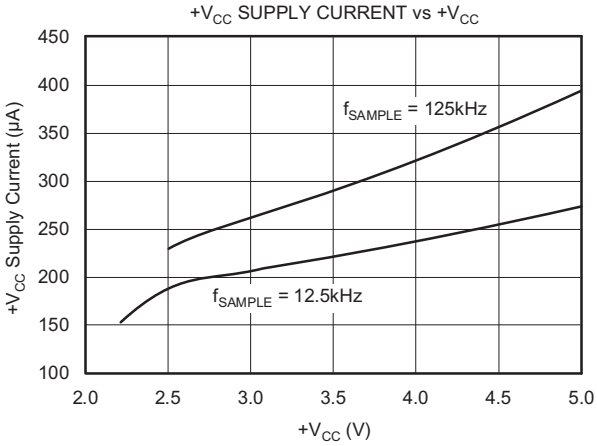

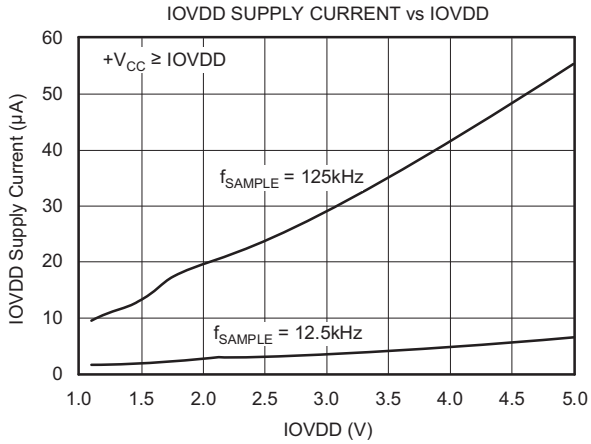

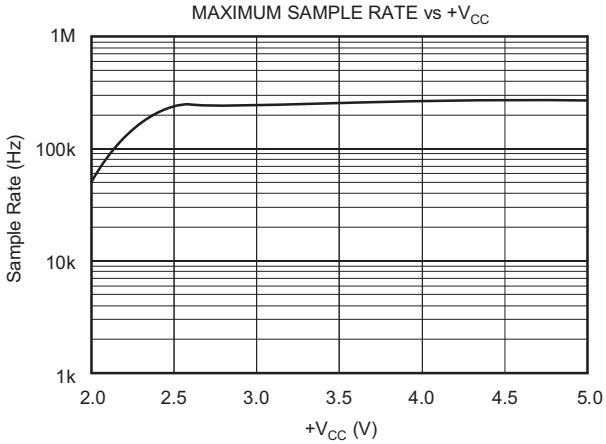

TYPICAL CHARACTERISTICS (continued)

At T_A = +25°C, $+V_{CC}$ = +2.7V, IOVDD = +1.8V, V_{REF} = External +2.5V, 12-bit mode, PD0 = 0, f_{SAMPLE} = 125kHz, f_{CLK} = 16 × f_{SAMPLE} = 2MHz (unless otherwise noted)

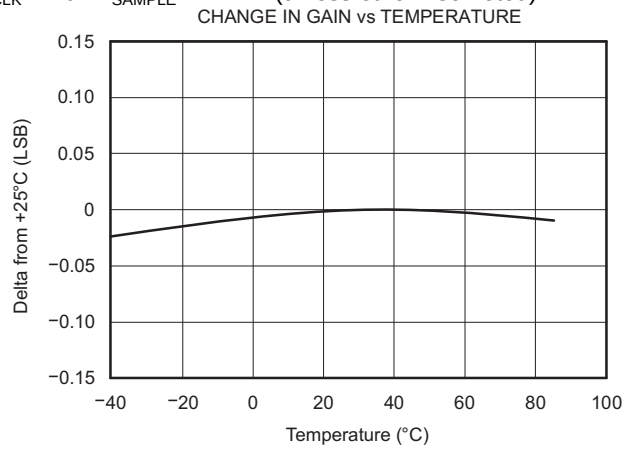

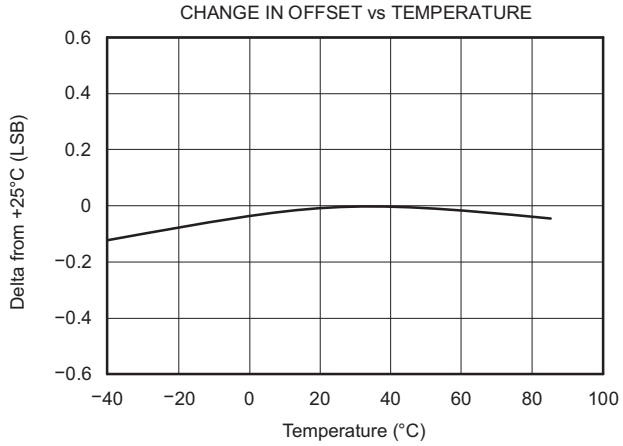

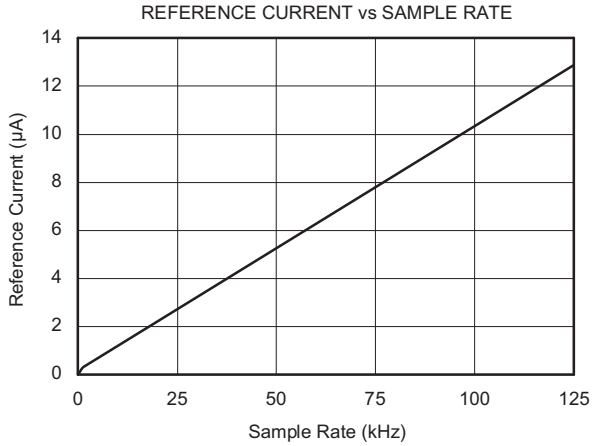

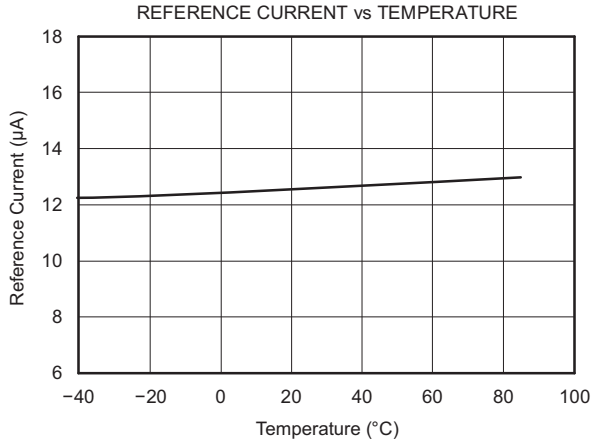

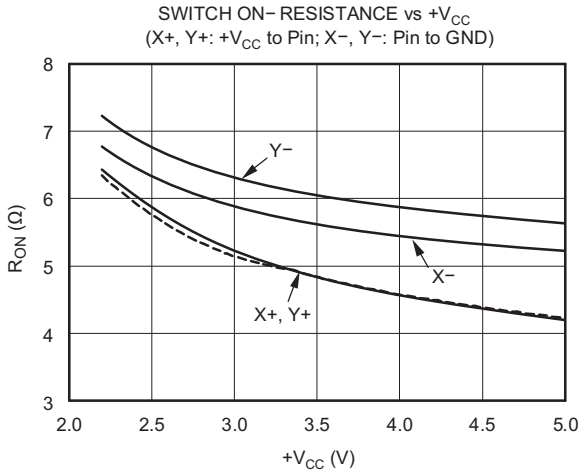

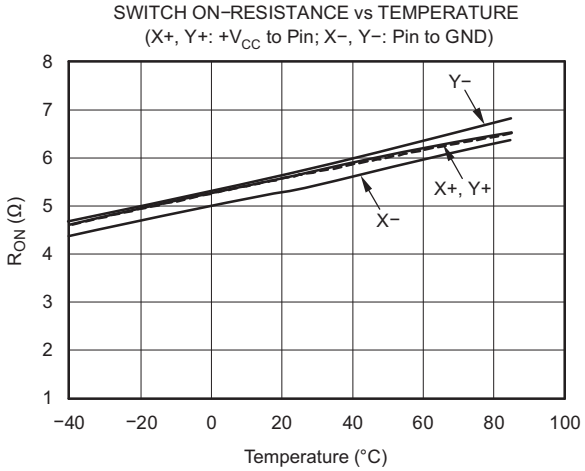

Copyright © 2010, Texas Instruments Incorporated

TYPICAL CHARACTERISTICS (continued)

At T_A = +25°C, $+V_{CC}$ = +2.7V, IOVDD = +1.8V, V_{REF} = External +2.5V, 12-bit mode, PD0 = 0, f_{SAMPLE} = 125kHz, f_{CLK} = 16 × f_{SAMPLE} = 2MHz (unless otherwise noted)

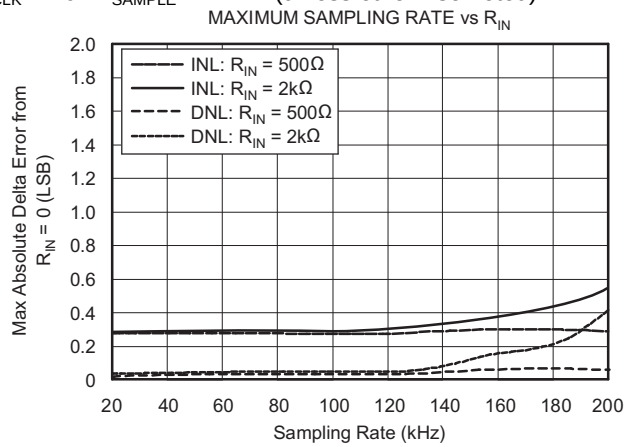

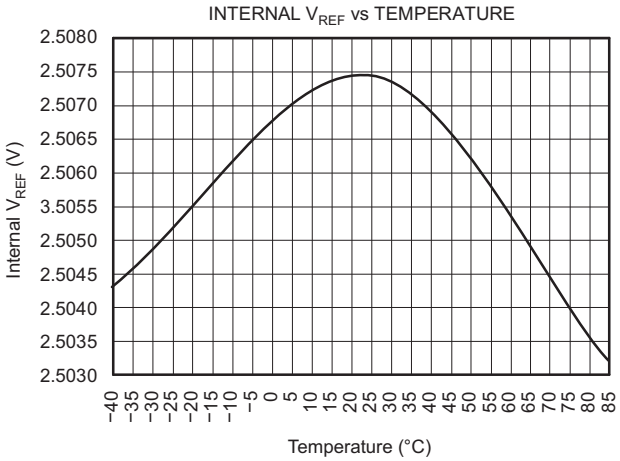

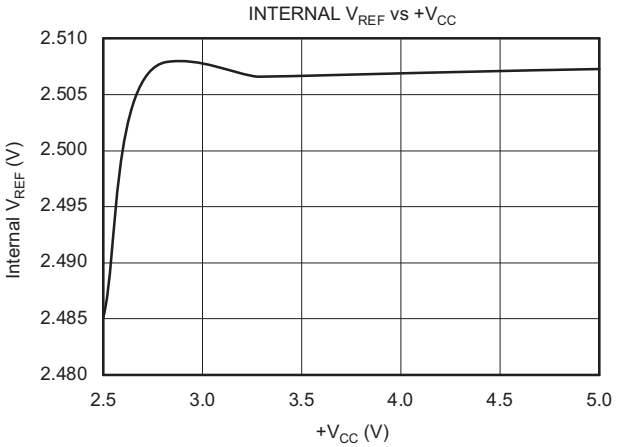

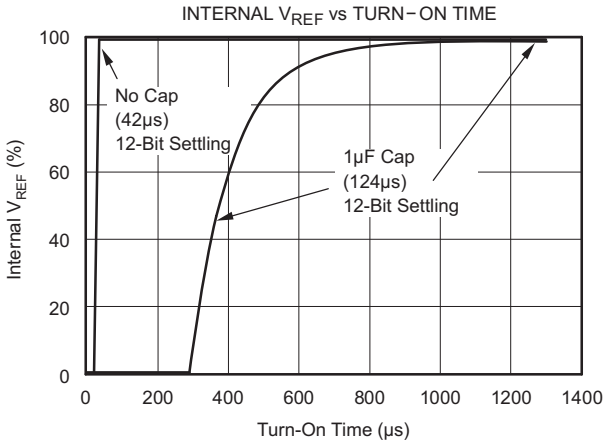

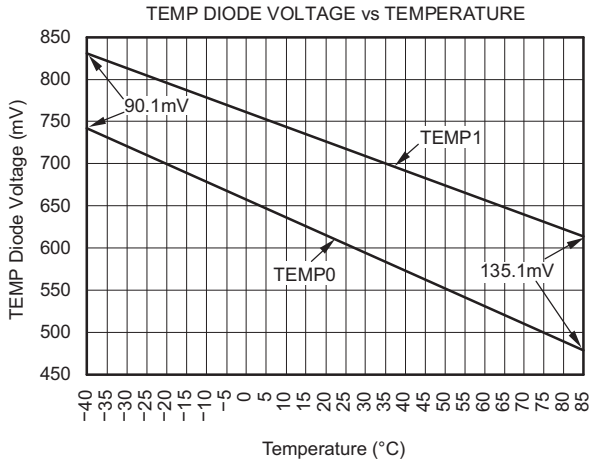

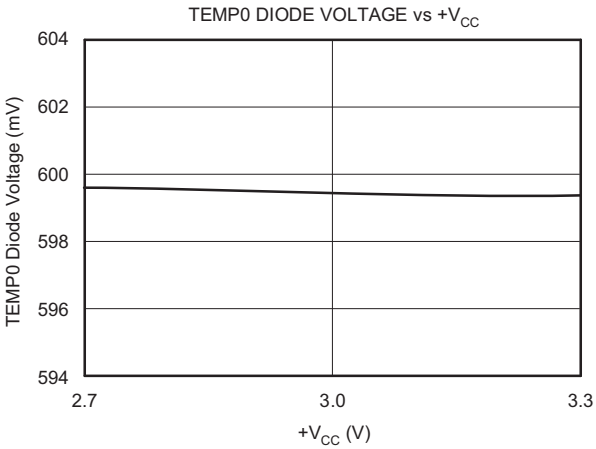

TYPICAL CHARACTERISTICS (continued)

At T_A = +25°C, $+V_{CC}$ = +2.7V, IOVDD = +1.8V, V_{REF} = External +2.5V, 12-bit mode, PD0 = 0, f_{SAMPLE} = 125kHz, f_{CLK} = 16 × f_{SAMPLE} = 2MHz (unless otherwise noted)

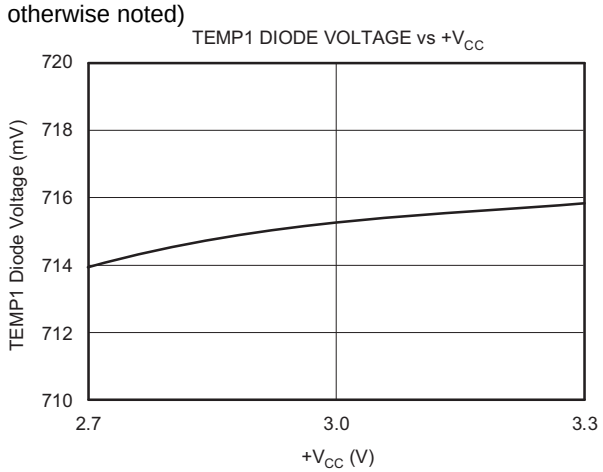

Copyright © 2010, Texas Instruments Incorporated

THEORY OF OPERATION

The TSC2046E is a classic successive approximation register (SAR) analog-to-digital converter (ADC). The architecture is based on capacitive redistribution, which inherently includes a sample-and-hold function. The converter is fabricated on a 0.6µm CMOS process.

The basic operation of the TSC2046E is shown in Figure 1. The device features an internal 2.5-V reference and an internal clock. Operation is maintained from a single supply of 2.7 V to 5.25 V. The internal reference can be overdriven with an external, low-impedance source between 2 V and $+V_{CC}$. The value of the reference voltage directly sets the input range of the converter.

The analog input (X-, Y-, and Z-position coordinates, auxiliary inputs, battery voltage, and chip temperature) to the converter is provided via a multiplexer. A unique configuration of low on-resistance switches allows an unselected ADC input channel to provide power and an accompanying pin to provide ground for an external device. By maintaining a differential input to the converter and a differential reference architecture, it is possible to negate the error from each touch panel driver switch on-resistance (if this is a source of error for the particular measurement).

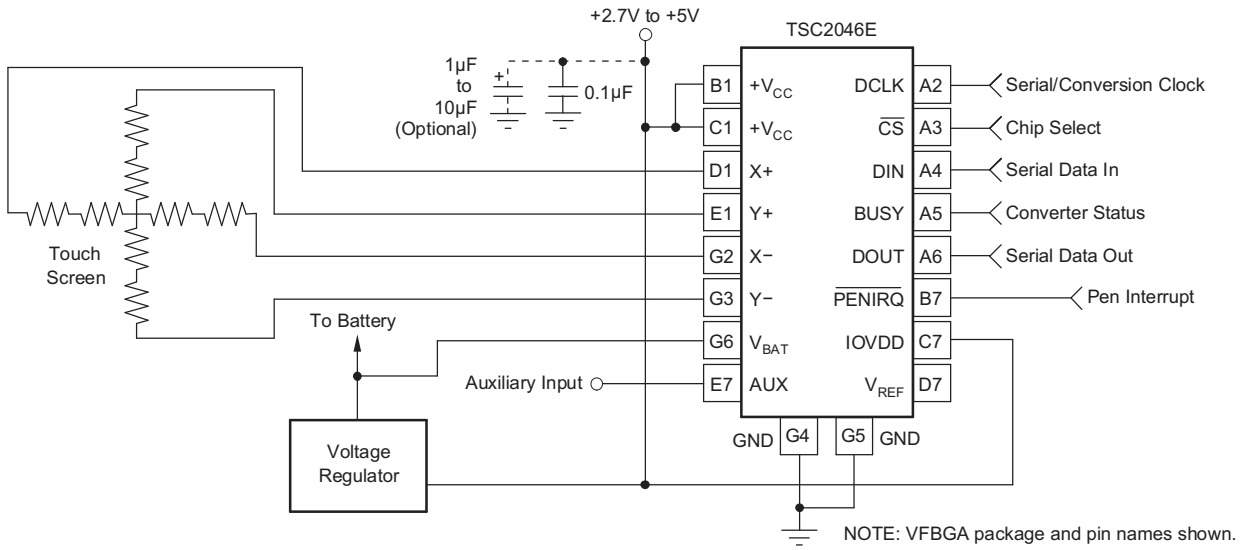

Figure 1. Basic Operation

Analog Input

Figure 2 shows a block diagram of the input multiplexer on the TSC2046E, the differential input of the ADC, and the differential reference of the converter. Table 1 and Table 2 show the relationship between the A2, A1, A0, and SER/$\overline{\text{DFR}}$ control bits and the configuration of the TSC2046E. The control bits are provided serially via the DIN pin—see the Digital Interface section of this data sheet for more details.

When the converter enters the Hold mode, the voltage difference between the +IN and -IN inputs (see Figure 2) is captured on the internal capacitor array. The input current on the analog inputs depends on the conversion rate of the device. During the sample period, the source must charge the internal sampling capacitor (typically 25 pF). After the capacitor has been fully charged, there is no further input current. The amount of charge transfer from the analog source to the converter is a function of conversion rate.

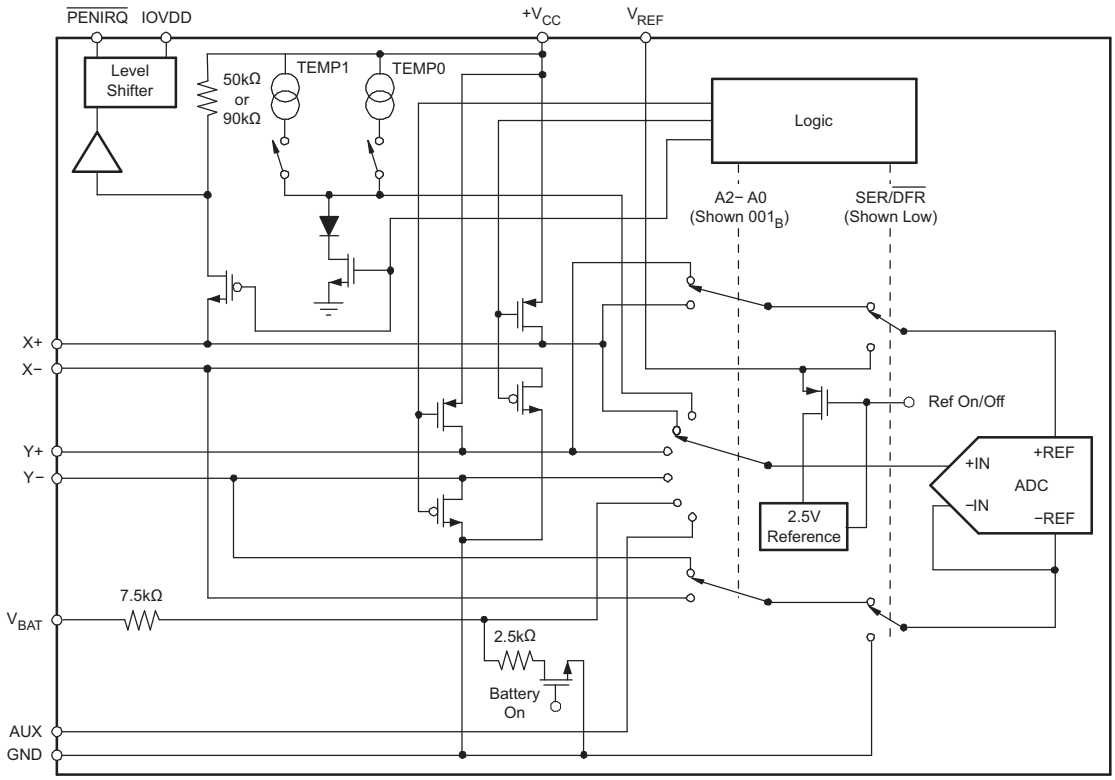

Figure 2. Simplified Diagram of the Analog Input

Table 1. Input Configuration (DIN), Single-Ended Reference Mode (SER/$\overline{\text{DFR}}$ High)

A2	A1	A0	V_{BAT}	AUX_{IN}	Temp	Y-	X+	Y+	Y- Position	X- Position	Z_1- Position	Z_2- Position	X- Drivers	Y- Drivers
0	0	0			+IN (TEMP0)								Off	Off
0	0	1					+IN		Measure				Off	On
0	1	0	+IN										Off	Off
0	1	1					+IN				Measure		X-, On	Y+, On
1	0	0				+IN						Measure	X-, On	Y+, On
1	0	1						+IN		Measure			On	Off
1	1	0		+IN									Off	Off
1	1	1			+IN (TEMP1)								Off	Off

Copyright © 2010, Texas Instruments Incorporated

Table 2. Input Configuration (DIN), Differential Reference Mode (SER/$\overline{DFR}$ Low)

A2	A1	A0	+REF	-REF	Y-	X+	Y+	Y-Position	X-Position	Z_1-Position	Z_2-Position	Drivers
0	0	1	Y+	Y-		+IN		Measure				Y+, Y-
0	1	1	Y+	X-		+IN				Measure		Y+, X-
1	0	0	Y+	X-	+IN						Measure	Y+, X-
1	0	1	X+	X-			+IN		Measure			X+, X-

Internal Reference

The TSC2046E has an internal 2.5-V voltage reference that can be turned on or off with the power-down control bit, PD1 (see Table 5 and Figure 3). Typically, the internal reference voltage is only used in the single-ended mode for battery monitoring, temperature measurement, and for using the auxiliary input. Optimal touch screen performance is achieved when using the differential mode. The internal reference voltage of the TSC2046E must be commanded to be off to maintain compatibility with the ADS7843. Therefore, after power-up, a write of PD1 = 0 is required to ensure the reference is off (see the Typical Characteristics for power-up time of the reference from power-down).

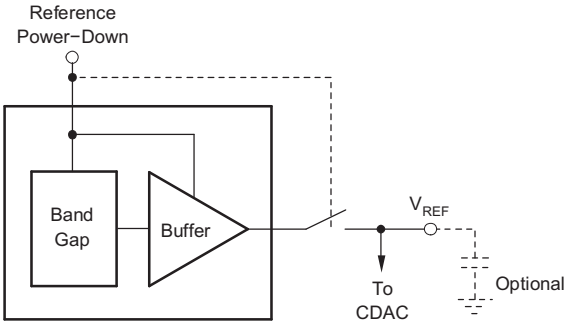

Figure 3. Simplified Diagram of the Internal Reference

Reference Input

The voltage difference between +REF and -REF (see Figure 2) sets the analog input range. The TSC2046E operates with a reference in the range of 1V to $+V_{CC}$. There are several critical items concerning the reference input and its wide voltage range. As the reference voltage is reduced, the analog voltage weight of each digital output code (referred to as LSB size) is also reduced. The LSB (least significant bit) size is equal to the reference voltage divided by 4096 in 12-bit mode. Any offset or gain error inherent in the ADC appears to increase, in terms of LSB size, as the reference voltage is reduced. For example, if the offset of a given converter is 2LSBs with a 2.5V reference, it is typically 5LSBs with a 1V reference. In each case, the actual offset of the device is the same, 1.22mV. With a lower reference voltage, more care must be taken to provide a clean layout including adequate bypassing, a clean (low-noise, low-ripple) power supply, a low-noise reference (if an external reference is used), and a low-noise input signal.

The voltage into the V_{REF} input directly drives the capacitor digital-to-analog converter (CDAC) portion of the TSC2046E. Therefore, the input current is very low (typically less than 13µA).

There is also a critical item regarding the reference when making measurements while the switch drivers are ON. For this discussion, it is useful to consider the basic operation of the TSC2046E (see Figure 1). This particular application shows the device being used to digitize a resistive touch screen. A measurement of the current Y-Position of the pointing device is made by connecting the X+ input to the ADC, turning on the Y+ and Y- drivers, and digitizing the voltage on X+ (Figure 4 shows a block diagram). For this measurement, the resistance in the X+ lead does not affect the conversion (it does affect the settling time, but the resistance is usually small enough that this is not a concern). However, because the resistance between Y+ and Y- is fairly low, the on-resistance of the Y drivers does make a small difference. Under the situation outlined so far, it is not possible to achieve a 0V input or a full-scale input regardless of where the pointing device is on the touch screen because some voltage is lost across the internal switches. In addition, the internal switch resistance is unlikely to track the resistance of the touch screen, providing an additional source of error.

Copyright © 2010, Texas Instruments Incorporated

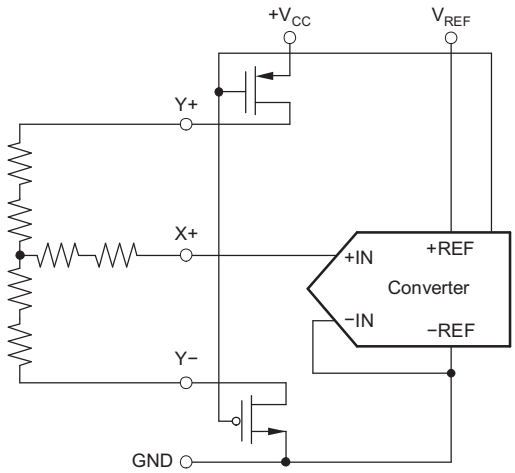

Figure 4. Simplified Diagram of Single-Ended Reference (SER/$\overline{\text{DFR}}$ High, Y Switches Enabled, X+ is Analog Input)

This situation can be remedied as shown in Figure 5. By setting the SER/$\overline{\text{DFR}}$ bit low, the +REF and -REF inputs are connected directly to Y+ and Y-, respectively, making the analog-to-digital conversion ratiometric. The result of the conversion is always a percentage of the external resistance, regardless of how it changes in relation to the on-resistance of the internal switches. Note that there is an important consideration regarding power dissipation when using the ratiometric mode of operation (see the Power Dissipation section for more details).

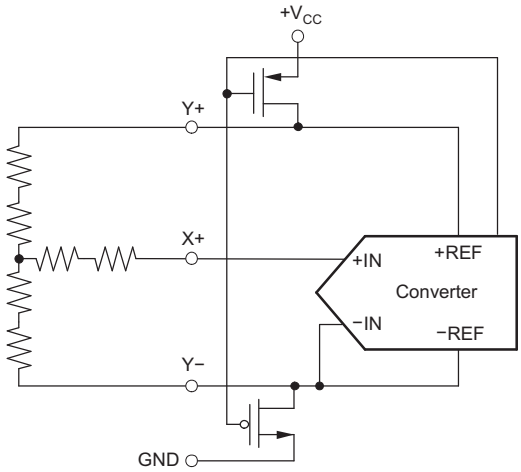

Figure 5. Simplified Diagram of Differential Reference (SER/$\overline{\text{DFR}}$ Low, Y Switches Enabled, X+ is Analog Input)

As a final note about the differential reference mode, it must be used with $+V_{CC}$as the source of the +REF voltage and cannot be used with V_{REF}. It is possible to use a high-precision reference on V_{REF} and single-ended reference mode for measurements that do not need to be ratiometric. In some cases, it is possible to power the converter directly from a precision reference. Most references can provide enough power for the TSC2046E, but might not be able to supply enough current for the external load (such as a resistive touch screen).

 Copyright © 2010, Texas Instruments Incorporated

Touch Screen Settling

In some applications, external capacitors may be required across the touch screen for filtering noise picked up by the touch screen (for example, noise generated by the LCD panel or backlight circuitry). These capacitors provide a low-pass filter to reduce the noise, but cause a settling time requirement when the panel is touched that typically shows up as a gain error. There are several methods for minimizing or eliminating this issue. The problem is that the input and/or reference has not settled to the final steady-state value prior to the ADC sampling the input(s) and providing the digital output. Additionally, the reference voltage may still be changing during the measurement cycle. Option 1 is to stop or slow down the TSC2046E DCLK for the required touch screen settling time. This option allows the input and reference to have stable values for the Acquire period (3 clock cycles of the TSC2046E; see Figure 9). This option works for both the single-ended and the differential modes. Option 2 is to operate the TSC2046E in the differential mode only for the touch screen measurements and command the TSC2046E to remain on (touch screen drivers ON) and not go into power-down (PD0 = 1). Several conversions are made, depending on the settling time required and the TSC2046E data rate. Once the required number of conversions have been made, the processor commands the TSC2046E to go into its power-down state on the last measurement. This process is required for X-Position, Y-Position, and Z-Position measurements. Option 3 is to operate in the 15 Clock-per-Conversion mode, which overlaps the analog-to-digital conversions and maintains the touch screen drivers on until commanded to stop by the processor (see Figure 13).

Temperature Measurement

In some applications, such as battery recharging, a measurement of ambient temperature is required. The temperature measurement technique used in the TSC2046E relies on the characteristics of a semiconductor junction operating at a fixed current level. The forward diode voltage (V_{BE}) has a well-defined characteristic versus temperature. The ambient temperature can be predicted in applications by knowing the +25°C value of the VBEvoltage and then monitoring the delta of that voltage as the temperature changes. The TSC2046E offers two modes of operation. The first mode requires calibration at a known temperature, but only requires a single reading to predict the ambient temperature. A diode is used (turned on) during this measurement cycle. The voltage across the diode is connected through the MUX for digitizing the forward bias voltage by the ADC with an address of A2 = 0, A1 = 0, and A0 = 0 (see Table 1 and Figure 6 for details). This voltage is typically 600mV at +25°C with a 20µA current through the diode. The absolute value of this diode voltage can vary by a few millivolts. However, the temperature coefficient (TC) of this voltage is very consistent at -2.1mV/°C. During the final test of the end product, the diode voltage would be stored at a known room temperature, in memory, for calibration purposes by the user. The result is an equivalent temperature measurement resolution of 0.3°C/LSB (in 12-bit mode).

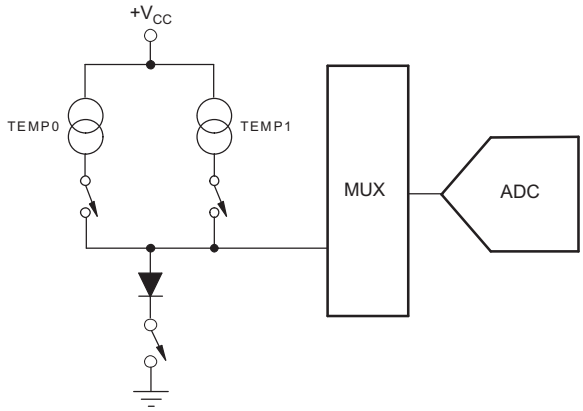

Figure 6. Temperature Measurement Functional Block Diagram

The second mode of operation does not require a test temperature calibration, but uses a two-measurement method to eliminate the need for absolute temperature calibration and for achieving 2°C accuracy. This mode requires a second conversion with an address of A2 = 1, A1 = 1, and A0 = 1, with a 91 times larger current. The voltage difference between the first and second conversion using 91 times the bias current is represented by Equation 1:

$$\Delta V = \frac{kT}{q} \times \ln(N) \tag{1}$$

where:

N = the current ratio = 91

k = Boltzmann's constant = 1.3807×10^{-23} J/K (joules/kelvin)

q = the electron charge = 1.6022×10^{-19} C (coulombs)

T = the temperature in kelvin (K)

This method can provide improved absolute temperature measurement, but at a lower resolution of 1.6°C/LSB. The resulting equation that solves for T is:

$$T = \frac{q - \Delta V}{k \times \ln(N)} \tag{2}$$

where:

$\Delta V = V_{BE}(TEMP1) - V_{BE}(TEMP0)$ (in mV)

$\therefore T = 2.573 \cdot \Delta V$ (in K)

or $T = 2.573 \cdot \Delta V - 273$ (in °C)

NOTE

The bias current for each diode temperature measurement is only on for three clock cycles (during the acquisition mode) and, therefore, does not add any noticeable increase in power, especially if the temperature measurement only occurs occasionally.

Battery Measurement

An added feature of the TSC2046E is the ability to monitor the battery voltage on the other side of the voltage regulator (dc/dc converter), as shown in Figure 7. The battery voltage can vary from 0V to 6V, while maintaining the voltage to the TSC2046E at 2.7V, 3.3V, etc. The input voltage (VBAT) is divided down by four so that a 5.5V battery voltage is represented as 1.375V to the ADC. This design simplifies the multiplexer and control logic. In order to minimize the power consumption, the divider is only on during the sampling period when A2 = 0, A1 = 1, and A0 = 0 (see Table 1 for the relationship between the control bits and configuration of the TSC2046E).

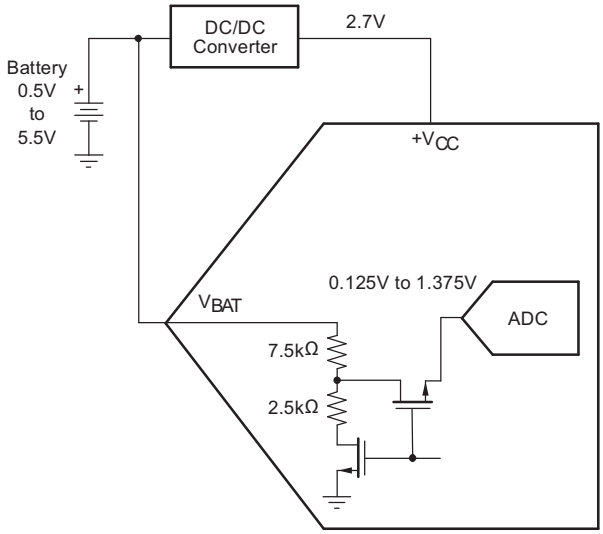

Figure 7. Battery Measurement Functional Block Diagram

Copyright © 2010, Texas Instruments Incorporated

Pressure Measurement

Measuring touch pressure can also be done with the TSC2046E. To determine pen or finger touch, the pressure of the touch needs to be determined. Generally, it is not necessary to have very high performance for this test; therefore, the 8-bit resolution mode is recommended (however, calculations shown here are in the 12-bit resolution mode). There are several different ways of performing this measurement. The TSC2046E supports two methods. The first method requires knowing the X-plate resistance, measurement of the X-Position, and two additional cross panel measurements (Z1 and Z2) of the touch screen, as shown in Figure 8. Using Equation 3 calculates the touch resistance:

$$R_{TOUCH} = R_{X\text{-}Plate} \times \frac{X\text{-}Position}{4096}\left(\frac{Z_2}{Z_1} - 1\right) \tag{3}$$

The second method requires knowing both the X-Plate and Y-Plate resistance, measurement of X-Position and Y-Position, and Z1. Equation 4 calculates the touch resistance using the second method:

$$R_{TOUCH} = \frac{R_{X\text{-}Plate} \times X\text{-}Position}{4096}\left(\frac{4096}{Z_1} - 1\right) - R_{Y\text{-}Plate}\left(1 - \frac{Y\text{-}Position}{4096}\right) \tag{4}$$

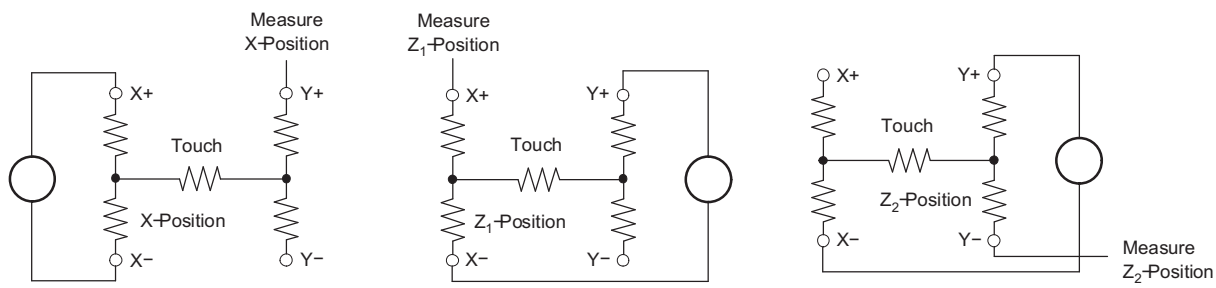

Figure 8. Pressure Measurement Block Diagram

Digital Interface

See Figure 9 for the typical operation of the TSC2046E digital interface. This diagram assumes that the source of the digital signals is a microcontroller or digital signal processor with a basic serial interface. Each communication between the processor and the converter, such as SPI, SSI, or Microwire™ synchronous serial interface, consists of eight clock cycles. One complete conversion can be accomplished with three serial communications for a total of 24 clock cycles on the DCLK input.

Control Byte

The control byte (on DIN), as shown in Table 3, provides the start conversion, addressing, ADC resolution, configuration, and power-down of the TSC2046E. Figure 9, Table 3 and Table 4 give detailed information regarding the order and description of these control bits within the control byte.

Initiate START—The first bit, the S bit, must always be high and initiates the start of the control byte. The TSC2046E ignores inputs on the DIN pin until the start bit is detected.

Addressing—The next three bits (A2, A1, and A0) select the active input channel(s) of the input multiplexer (see Table 1, Table 2, and Figure 2), touch screen drivers, and the reference inputs.

MODE—The mode bit sets the resolution of the ADC. With this bit low, the next conversion has 12-bit resolution, whereas with this bit high, the next conversion has 8-bit resolution.

SER/$\overline{\text{DFR}}$—The SER/$\overline{\text{DFR}}$ bit controls the reference mode, either single-ended (high) or differential (low). The differential mode is also referred to as the ratiometric conversion mode and is preferred for X-Position, Y-Position, and Pressure-Touch measurements for optimum performance. The reference is derived from the voltage at the switch drivers, which is almost the same as the voltage to the touch screen. In this case, a reference voltage is not needed as the reference voltage to the ADC is the voltage across the touch screen. In the single-ended mode, the converter reference voltage is always the difference between the V_{REF} and GND pins (see Table 1 and Table 2, and Figure 2 through Figure 5, for further information).

Table 3. Order of the Control Bits in the Control Byte

BIT 7 (MSB)	BIT 6	BIT 5	BIT 4	BIT 3	BIT 2	BIT 1	BIT 0 (LSB)
S	A2	A1	A0	MODE	SER/$\overline{\text{DFR}}$	PD1	PD0

Table 4. Descriptions of the Control Bits within the Control Byte

BIT	NAME	DESCRIPTION
7	S	Start bit. Control byte starts with first high bit on DIN. A new control byte can start every 15th clock cycle in 12-bit conversion mode or every 11th clock cycle in 8-bit conversion mode (see Figure 13).
6-4	A2-A0	Channel Select bits. Along with the SER/$\overline{\text{DFR}}$ bit, these bits control the setting of the multiplexer input, touch driver switches, and reference inputs (see Table 1 and Figure 13).
3	MODE	12-Bit/8-Bit Conversion Select bit. This bit controls the number of bits for the next conversion: 12-bits (low) or 8-bits (high).
2	SER/$\overline{\text{DFR}}$	Single-Ended/Differential Reference Select bit. Along with bits A2-A0, this bit controls the setting of the multiplexer input, touch driver switches, and reference inputs (see Table 1 and Table 2).
1-0	PD1-PD0	Power-Down Mode Select bits. See Table 5 for details.

Copyright © 2010, Texas Instruments Incorporated

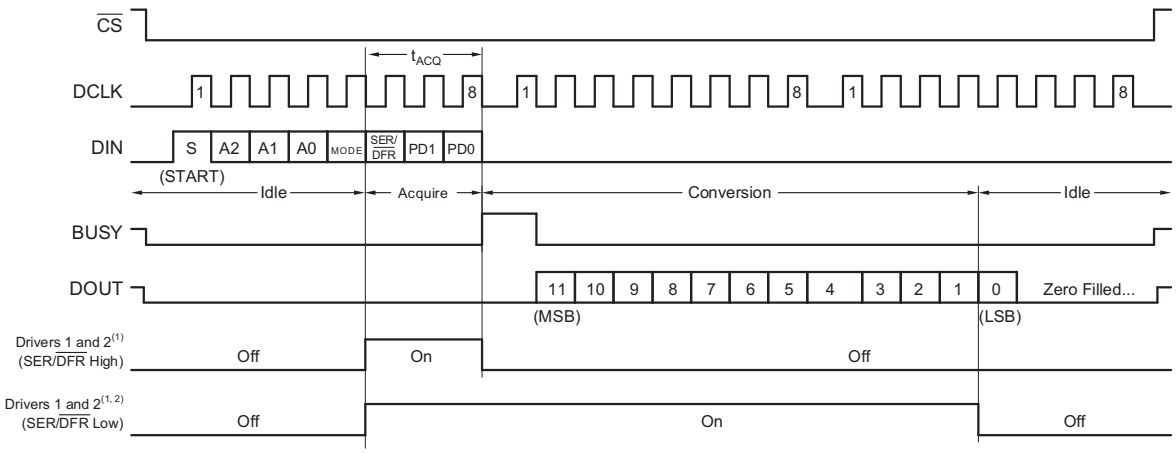

NOTES: (1) For Y-Position, Driver 1 is on X+ is selected, and Driver 2 is off. For X-Position, Driver 1 is off, Y+ is selected, and Driver 2 is on. Y− will turn on when power-down mode is entered and PD0 = 0.
(2) Drivers will remain on if PD0 = 1 (no power down) until selected input channel, reference mode, or power-down mode is changed, or $\overline{CS}$ is high.

Figure 9. Conversion Timing, 24 Clocks-per-Conversion, 8-Bit Bus Interface No DCLK Delay Required With Dedicated Serial Port

If X-Position, Y-Position, and Pressure-Touch are measured in the single-ended mode, an external reference voltage is needed. The TSC2046E must also be powered from the external reference. Caution should be observed when using the single-ended mode such that the input voltage to the ADC does not exceed the internal reference voltage, especially if the supply voltage is greater than 2.7V.

NOTE

The differential mode can only be used for X-Position, Y-Position, and Pressure-Touch measurements. All other measurements require the single-ended mode.

PD0 and PD1—Table 5 describes the power-down and the internal reference voltage configurations. The internal reference voltage can be turned on or off independently of the ADC. This feature can allow extra time for the internal reference voltage to settle to the final value prior to making a conversion. Make sure to also allow this extra wake-up time if the internal reference is powered down. The ADC requires no wake-up time and can be instantaneously used. Also note that the status of the internal reference power-down is latched into the part (internally) with BUSY going high. In order to turn the reference off, an additional write to the TSC2046E is required after the channel has been converted.

Table 5. Power-Down and Internal Reference Selection

PD1	PD0	$\overline{PENIRQ}$	DESCRIPTION
0	0	Enabled	Power-Down Between Conversions. When each conversion is finished, the converter enters a low-power mode. At the start of the next conversion, the device instantly powers up to full power. There is no need for additional delays to ensure full operation, and the very first conversion is valid. The Y-switch is on when in power-down.
0	1	Disabled	Reference is off and ADC is on.
1	0	Enabled	Reference is on and ADC is off.
1	1	Disabled	Device is always powered. Reference is on and ADC is on.

$\overline{PENIRQ}$ Output

The pen-interrupt output function is shown in Figure 10. While in power-down mode with PD0 = 0, the Y-driver is on and connects the Y-plane of the touch screen to GND. The $\overline{PENIRQ}$ output is connected to the X+ input through two transmission gates. When the screen is touched, the X+ input is pulled to ground through the touch screen.

In most of the TSC2046E models, the internal pullup resistor value is nominally 50kΩ, but this value may vary between 36kΩ and 67kΩ given process and temperature variations. In order to assure a logic low of 0.35 ($+V_{CC}$) is presented to the $\overline{PENIRQ}$ circuitry, the total resistance between the X+ and Y- terminals must be less than 21kΩ.

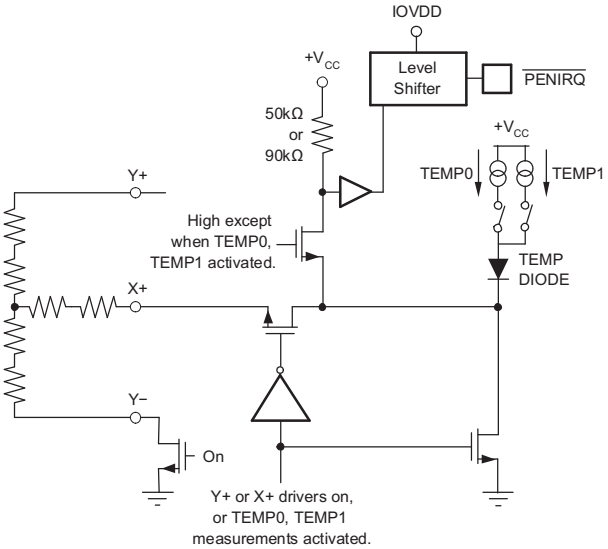

Figure 10. $\overline{PENIRQ}$ Functional Block Diagram

The -90 version of the TSC2046E uses a nominal 90kΩ pullup resistor that allows the total resistance between the X+ and Y- terminals to be as high as 30kΩ. Note that the higher pullup resistance causes a slower response time of the $\overline{PENIRQ}$ to a screen touch, so user software should take this into account.

The $\overline{PENIRQ}$ output goes low due to the current path through the touch screen to ground, initiating an interrupt to the processor. During the measurement cycle for X-, Y-, and Z-Position, the X+ input is disconnected from the $\overline{PENIRQ}$ internal pull-up resistor. This disconnection is done to eliminate any leakage current from the internal pull-up resistor through the touch screen, thus causing no errors.

Furthermore, the $\overline{PENIRQ}$ output is disabled and low during the measurement cycle for X-, Y-, and Z-Position. The $\overline{PENIRQ}$ output is disabled and high during the measurement cycle for battery monitor, auxiliary input, and chip temperature. If the last control byte written to the TSC2046E contains PD0 = 1, the pen-interrupt output function is disabled and is not able to detect when the screen is touched. In order to re-enable the pen-interrupt output function under these circumstances, a control byte needs to be written to the TSC2046E with PD0 = 0. If the last control byte written to the TSC2046E contains PD0 = 0, the pen-interrupt output function is enabled at the end of the conversion. The end of the conversion occurs on the falling edge of DCLK after bit 1 of the converted data is clocked out of the TSC2046E.

It is recommended that the processor mask the interrupt that $\overline{PENIRQ}$ is associated with whenever the processor sends a control byte to the TSC2046E. This masking prevents false triggering of interrupts when the $\overline{PENIRQ}$ output is disabled in the cases discussed in this section.

16 Clocks-per-Conversion

The control bits for conversion n + 1 can be overlapped with conversion n to allow for a conversion every 16 clock cycles, as shown in Figure 11. This figure also shows possible serial communication occurring with other serial peripherals between each byte transfer from the processor to the converter. (16 clocks cycles are possible, provided that each conversion completes within 1.6ms of starting. Otherwise, the signal that is captured on the input sample-and-hold may droop enough to affect the conversion result.) Note that the TSC2046E is fully powered while other serial communications are taking place during a conversion.

 Copyright © 2010, Texas Instruments Incorporated

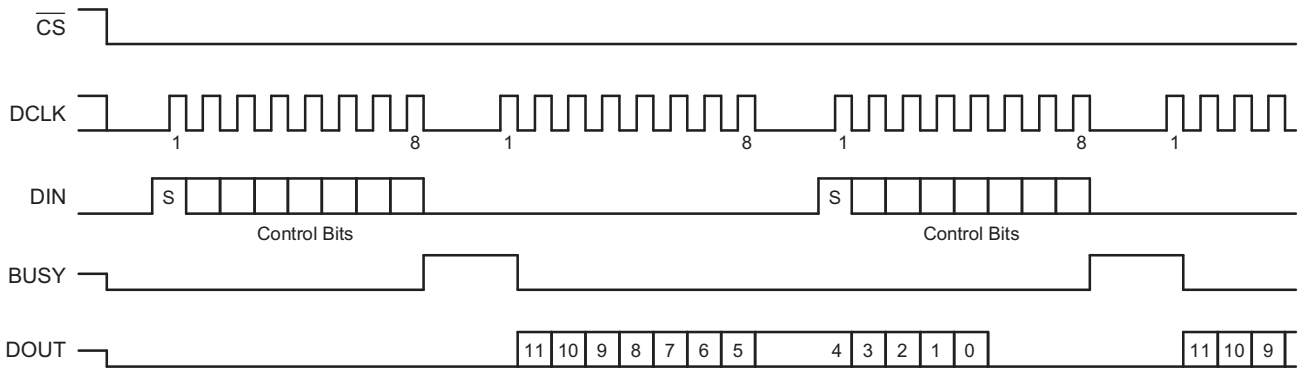

Figure 11. Conversion Timing, 16 Clocks-per-Conversion, 8-Bit Bus Interface No DCLK Delay Required With Dedicated Serial Port

Digital Timing

Figure 9, Figure 12, and Table 6 provide detailed timing for the digital interface of the TSC2046E.

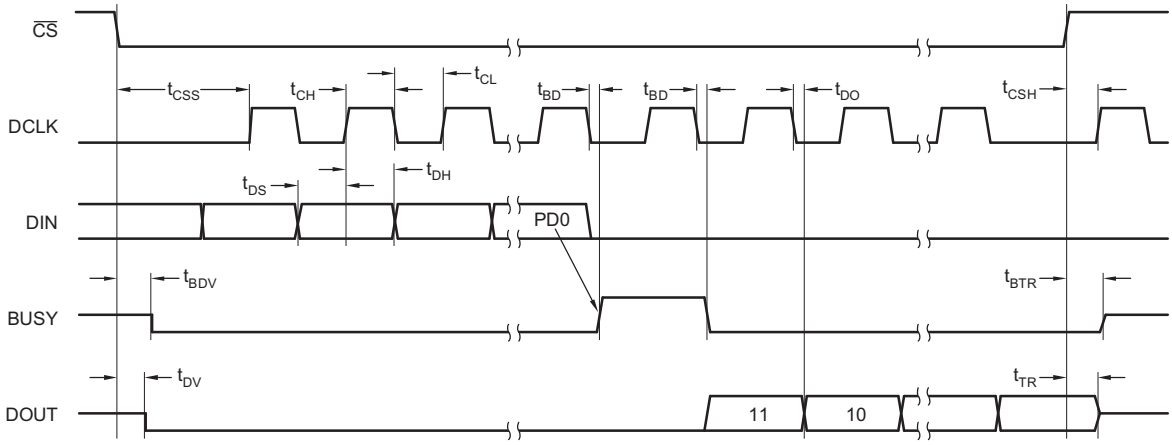

Figure 12. Detailed Timing Diagram

Table 6. Timing Specifications(1)

SYMBOL	DESCRIPTION	MIN	TYP	MAX	UNIT
t_{ACQ}	Acquisition Time	1.5			µs
t_{DS}	DIN Valid Prior to DCLK Rising	100			ns
t_{DH}	DIN Hold After DCLK High	50			ns
t_{DO}	DCLK Falling to DOUT Valid			200	ns
t_{DV}	$\overline{CS}$ Falling to DOUT Enabled			200	ns
t_{TR}	$\overline{CS}$ Rising to DOUT Disabled			200	ns
t_{CSS}	$\overline{CS}$ Falling to First DCLK Rising	100			ns
t_{CSH}	$\overline{CS}$ Rising to DCLK Ignored	10			ns
t_{CH}	DCLK High	200			ns
t_{CL}	DCLK Low	200			ns
t_{BD}	DCLK Falling to BUSY Rising/Falling			200	ns
t_{BDV}	$\overline{CS}$ Falling to BUSY Enabled			200	ns
t_{BTR}	$\overline{CS}$ Rising to BUSY Disabled			200	ns

(1) T_A = −40°C to +125°C, $+V_{CC}$ = 2.7V, $+V_{CC}$ ≥ IOVDD ≥ 1.5V, C_{LOAD} = 50pF

15 Clocks-per-Conversion

Figure 13 provides the fastest way to clock the TSC2046E. This method does not work with the serial interface of most microcontrollers and digital signal processors, as they are generally not capable of providing 15 clock cycles per serial transfer. However, this method can be used with field-programmable gate arrays (FPGAs) or application- specific integrated circuits (ASICs). Note that this effectively increases the maximum conversion rate of the converter beyond the values given in the specification tables, which assume 16 clock cycles per conversion.

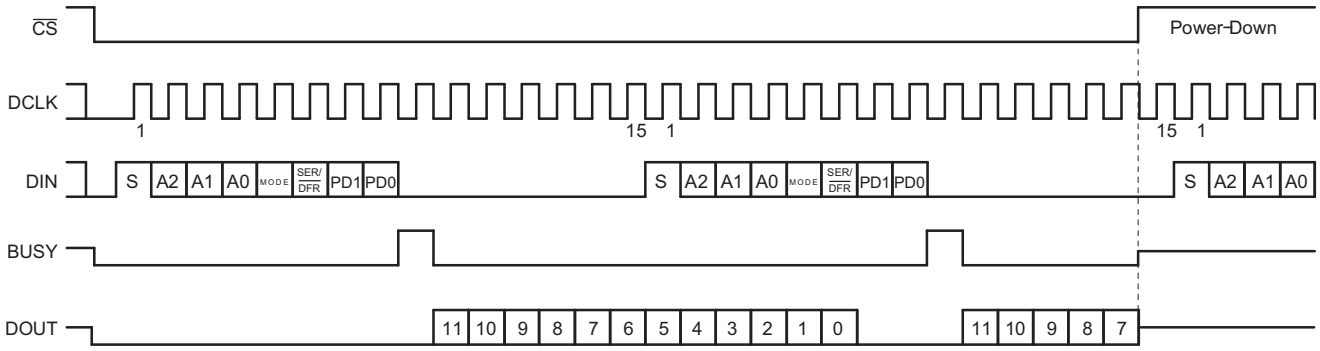

Figure 13. Maximum Conversion Rate, 15 Clocks-per-Conversion

Data Format

The TSC2046E output data is in Straight Binary format, as shown in Figure 14. This figure shows the ideal output code for the given input voltage and does not include the effects of offset, gain, or noise.

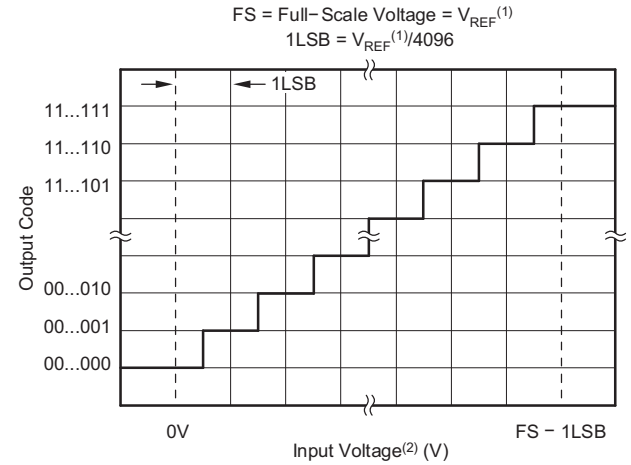

NOTES: (1) Reference voltage at converter: +REF − (−REF); see Figure 2.
(2) Input voltage at converter, after multiplexer: +IN − (−IN); see Figure 2.

Figure 14. Ideal Input Voltages and Output Codes

8-Bit Conversion

The TSC2046E provides an 8-bit conversion mode that can be used when faster throughput is needed and the digital result is not as critical. By switching to the 8-bit mode, a conversion is complete four clock cycles earlier. Not only does this shorten each conversion by four bits (25% faster throughput), but each conversion can actually occur at a faster clock rate. This faster rate occurs because the internal settling time of the TSC2046E is not as critical—settling to better than 8 bits is all that is needed. The clock rate can be as much as 50% faster. The faster clock rate and fewer clock cycles combine to provide a 2x increase in conversion rate.

Copyright © 2010, Texas Instruments Incorporated

Power Dissipation

There are two major power modes for the TSC2046E: full-power (PD0 = 1) and auto power-down (PD0 = 0). When operating at full speed and 16 clocks-per-conversion (see Figure 11), the TSC2046E spends most of the time acquiring or converting. There is little time for auto power-down, assuming that this mode is active. Therefore, the difference between full-power mode and auto power-down is negligible. If the conversion rate is decreased by slowing the frequency of the DCLK input, the two modes remain approximately equal. However, if the DCLK frequency is kept at the maximum rate during a conversion but conversions are done less often, the difference between the two modes is dramatic.

Figure 15 shows the difference between reducing the DCLK frequency (scaling DCLK to match the conversion rate) or maintaining DCLK at the highest frequency and reducing the number of conversions per second. In the latter case, the converter spends an increasing percentage of time in power-down mode (assuming the auto power-down mode is active).

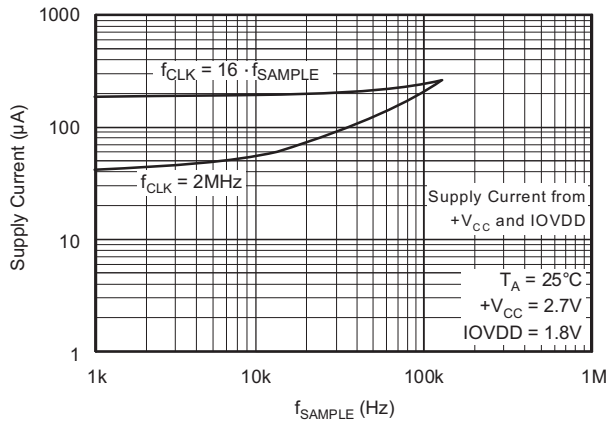

Figure 15. Supply Current vs Directly Scaling the Frequency of DCLK with Sample Rate or Maintaining DCLK at the Maximum Possible Frequency

Another important consideration for power dissipation is the reference mode of the converter. In the single-ended reference mode, the touch panel drivers are ON only when the analog input voltage is being acquired (see Figure 9 and Table 1). The external device (for example, a resistive touch screen), therefore, is only powered during the acquisition period. In the differential reference mode, the external device must be powered throughout the acquisition and conversion periods (see Figure 9). If the conversion rate is high, it could substantially increase power dissipation.

$\overline{CS}$ also puts the TSC2046E into power-down mode. When $\overline{CS}$ goes high, the TSC2046E immediately goes into power-down mode and does not complete the current conversion. The internal reference, however, does not turn off with $\overline{CS}$ going high. To turn the reference off, an additional write is required before $\overline{CS}$ goes high (PD1 = 0).

When the TSC2046E first powers up, the device draws about 20µA of current until a control byte is written to it with PD0 = 0 to put it into power-down mode. This current draw can be avoided if the TSC2046E is powered up with $\overline{CS}$ = 0 and DCLK = IOVDD.

Copyright © 2010, Texas Instruments Incorporated

Layout

The following layout suggestions provide the most optimum performance from the TSC2046E. Many portable applications, however, have conflicting requirements concerning power, cost, size, and weight. In general, most portable devices have fairly clean power and grounds because most of the internal components are very low power. This situation means less bypassing for the converter power and less concern regarding grounding. Still, each situation is unique and the following suggestions should be reviewed carefully.

For optimum performance, care should be taken with the physical layout of the TSC2046E circuitry. The basic SAR architecture is sensitive to glitches or sudden changes on the power supply, reference, ground connections, and digital inputs that occur just prior to latching the output of the analog comparator. Therefore, during any single conversion for an n-bit SAR converter, there are n windows in which large external transient voltages can easily affect the conversion result. Such glitches can originate from switching power supplies, nearby digital logic, and high-power devices. The degree of error in the digital output depends on the reference voltage, layout, and the exact timing of the external event. The error can change if the external event changes in time with respect to the DCLK input.

Because of the SAR architecture sensitvity, power to the TSC2046E should be clean and well bypassed. A 0.1µF ceramic bypass capacitor should be placed as close to the device as possible. A 1µF to 10µF capacitor may also be needed if the impedance of the connection between $+V_{CC}$ or IOVDD and the power supplies is high. Low-leakage capacitors should be used to minimize power dissipation through the bypass capacitors when the TSC2046E is in power-down mode.

A bypass capacitor is generally not needed on the V_{REF} pin because the internal reference is buffered by an internal op amp. If an external reference voltage originates from an op amp, make sure that it can drive any bypass capacitor that is used without oscillation.

The TSC2046E architecture offers no inherent rejection of noise or voltage variation in regards to using an external reference input. This is of particular concern when the reference input is tied to the power supply. Any noise and ripple from the supply appears directly in the digital results. Whereas high-frequency noise can be filtered out, voltage variation bacause of line frequency (50Hz or 60Hz) can be difficult to remove.

The GND pin must be connected to a clean ground point. In many cases, this is the analog ground. Avoid connections which are too near the grounding point of a microcontroller or digital signal processor. If needed, run a ground trace directly from the converter to the power-supply entry or battery connection point. The ideal layout includes an analog ground plane dedicated to the converter and associated analog circuitry.

In the specific case of use with a resistive touch screen, care should be taken with the connection between the converter and the touch screen. Although resistive touch screens have fairly low resistance, the interconnection should be as short and robust as possible. Longer connections are a source of error, much like the on-resistance of the internal switches. Likewise, loose connections can be a source of error when the contact resistance changes with flexing or vibrations.

As indicated previously, noise can be a major source of error in touch screen applications (such as in applications that require a backlit LCD panel). This EMI noise can be coupled through the LCD panel to the touch screen and cause flickering of the converted data. Several things can be done to reduce this error; for instance, using a touch screen with a bottom-side metal layer connected to ground to shunt the majority of noise to ground. Additionally, filtering capacitors from Y+, Y-, X+, and X- pins to ground can also help. Caution should be observed under these circumstances for settling time of the touch screen, especially operating in the single-ended mode and at high data rates.

Copyright © 2010, Texas Instruments Incorporated

PACKAGING INFORMATION

Orderable Device	Status (1)	Package Type	Package Drawing	Pins	Package Qty	Eco Plan (2)	Lead finish/ Ball material (6)	MSL Peak Temp (3)	Op Temp (°C)	Device Marking (4/5)	Samples
TSC2046EQPWRQ1	ACTIVE	TSSOP	PW	16	2000	RoHS & Green	NIPDAU	Level-1-260C-UNLIM	-40 to 125	T2046EQ	Samples

(1) The marketing status values are defined as follows:
ACTIVE: Product device recommended for new designs.
LIFEBUY: TI has announced that the device will be discontinued, and a lifetime-buy period is in effect.
NRND: Not recommended for new designs. Device is in production to support existing customers, but TI does not recommend using this part in a new design.
PREVIEW: Device has been announced but is not in production. Samples may or may not be available.
OBSOLETE: TI has discontinued the production of the device.

(2) **RoHS:** TI defines "RoHS" to mean semiconductor products that are compliant with the current EU RoHS requirements for all 10 RoHS substances, including the requirement that RoHS substance do not exceed 0.1% by weight in homogeneous materials. Where designed to be soldered at high temperatures, "RoHS" products are suitable for use in specified lead-free processes. TI may reference these types of products as "Pb-Free".
RoHS Exempt: TI defines "RoHS Exempt" to mean products that contain lead but are compliant with EU RoHS pursuant to a specific EU RoHS exemption.
Green: TI defines "Green" to mean the content of Chlorine (Cl) and Bromine (Br) based flame retardants meet JS709B low halogen requirements of <=1000ppm threshold. Antimony trioxide based flame retardants must also meet the <=1000ppm threshold requirement.

(3) MSL, Peak Temp. - The Moisture Sensitivity Level rating according to the JEDEC industry standard classifications, and peak solder temperature.

(4) There may be additional marking, which relates to the logo, the lot trace code information, or the environmental category on the device.

(5) Multiple Device Markings will be inside parentheses. Only one Device Marking contained in parentheses and separated by a "~" will appear on a device. If a line is indented then it is a continuation of the previous line and the two combined represent the entire Device Marking for that device.

(6) Lead finish/Ball material - Orderable Devices may have multiple material finish options. Finish options are separated by a vertical ruled line. Lead finish/Ball material values may wrap to two lines if the finish value exceeds the maximum column width.

Important Information and Disclaimer: The information provided on this page represents TI's knowledge and belief as of the date that it is provided. TI bases its knowledge and belief on information provided by third parties, and makes no representation or warranty as to the accuracy of such information. Efforts are underway to better integrate information from third parties. TI has taken and continues to take reasonable steps to provide representative and accurate information but may not have conducted destructive testing or chemical analysis on incoming materials and chemicals. TI and TI suppliers consider certain information to be proprietary, and thus CAS numbers and other limited information may not be available for release.

In no event shall TI's liability arising out of such information exceed the total purchase price of the TI part(s) at issue in this document sold by TI to Customer on an annual basis.

OTHER QUALIFIED VERSIONS OF TSC2046E-Q1 :

- Catalog: TSC2046E

NOTE: Qualified Version Definitions:

- Catalog - TI's standard catalog product

TAPE AND REEL INFORMATION

REEL DIMENSIONS

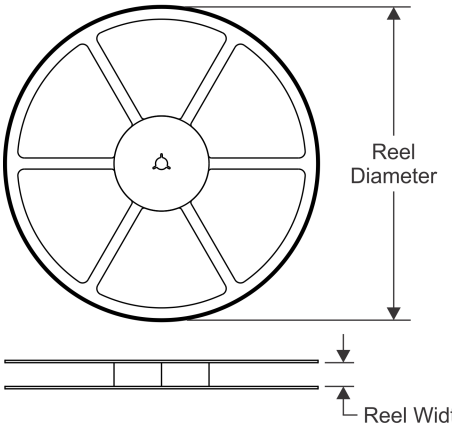

TAPE DIMENSIONS

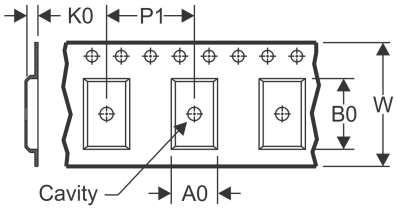

A0	Dimension designed to accommodate the component width
B0	Dimension designed to accommodate the component length
K0	Dimension designed to accommodate the component thickness
W	Overall width of the carrier tape
P1	Pitch between successive cavity centers

QUADRANT ASSIGNMENTS FOR PIN 1 ORIENTATION IN TAPE

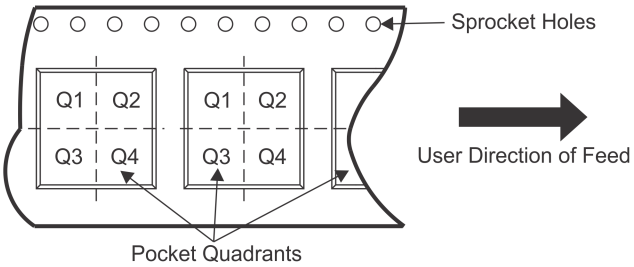

*All dimensions are nominal

Device	Package Type	Package Drawing	Pins	SPQ	Reel Diameter (mm)	Reel Width W1 (mm)	A0 (mm)	B0 (mm)	K0 (mm)	P1 (mm)	W (mm)	Pin1 Quadrant
TSC2046EQPWRQ1	TSSOP	PW	16	2000	330.0	12.4	6.9	5.6	1.6	8.0	12.0	Q1

TAPE AND REEL BOX DIMENSIONS

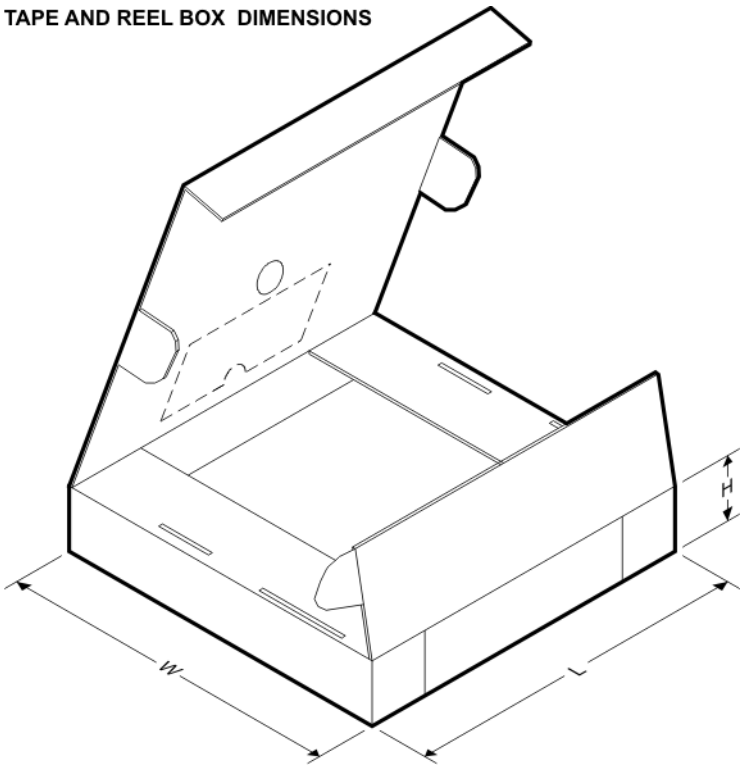

*All dimensions are nominal

Device	Package Type	Package Drawing	Pins	SPQ	Length (mm)	Width (mm)	Height (mm)
TSC2046EQPWRQ1	TSSOP	PW	16	2000	853.0	449.0	35.0

PW0016A

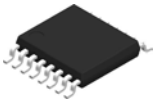

PACKAGE OUTLINE

TSSOP - 1.2 mm max height

SMALL OUTLINE PACKAGE

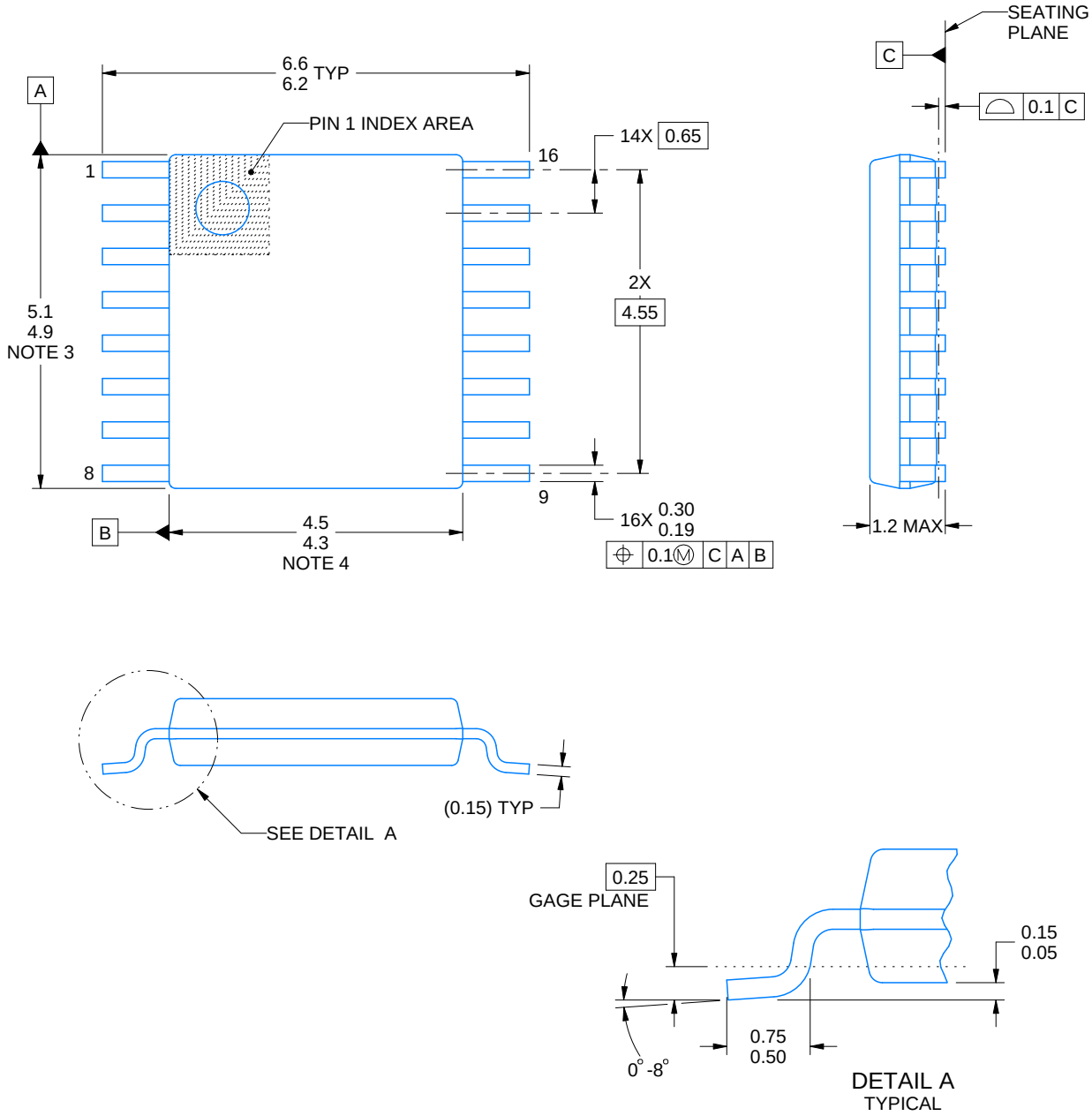

NOTES:

1. All linear dimensions are in millimeters. Any dimensions in parenthesis are for reference only. Dimensioning and tolerancing per ASME Y14.5M.
2. This drawing is subject to change without notice.
3. This dimension does not include mold flash, protrusions, or gate burrs. Mold flash, protrusions, or gate burrs shall not exceed 0.15 mm per side.
4. This dimension does not include interlead flash. Interlead flash shall not exceed 0.25 mm per side.
5. Reference JEDEC registration MO-153.

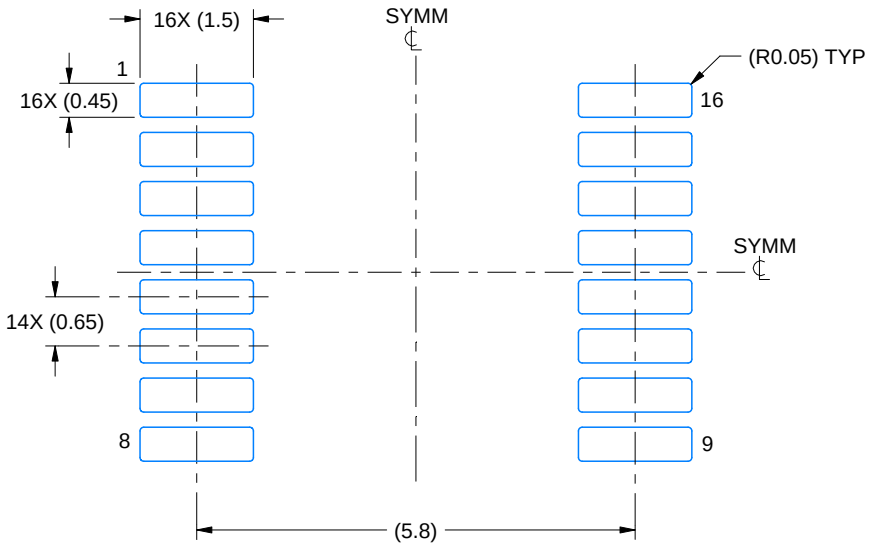

LAND PATTERN EXAMPLE
EXPOSED METAL SHOWN
SCALE: 10X

NON-SOLDER MASK DEFINED (PREFERRED)

SOLDER MASK DEFINED

SOLDER MASK DETAILS

4220204/A 02/2017

NOTES: (continued)

6. Publication IPC-7351 may have alternate designs.
7. Solder mask tolerances between and around signal pads can vary based on board fabrication site.

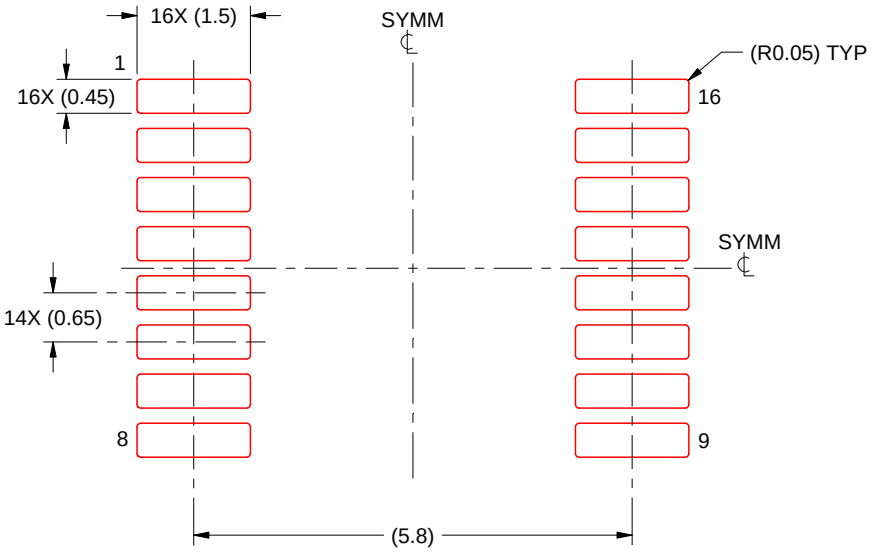

SOLDER PASTE EXAMPLE
BASED ON 0.125 mm THICK STENCIL
SCALE: 10X

4220204/A 02/2017

NOTES: (continued)

8. Laser cutting apertures with trapezoidal walls and rounded corners may offer better paste release. IPC-7525 may have alternate design recommendations.
9. Board assembly site may have different recommendations for stencil design.

IMPORTANT NOTICE AND DISCLAIMER

TI PROVIDES TECHNICAL AND RELIABILITY DATA (INCLUDING DATASHEETS), DESIGN RESOURCES (INCLUDING REFERENCE DESIGNS), APPLICATION OR OTHER DESIGN ADVICE, WEB TOOLS, SAFETY INFORMATION, AND OTHER RESOURCES “AS IS” AND WITH ALL FAULTS, AND DISCLAIMS ALL WARRANTIES, EXPRESS AND IMPLIED, INCLUDING WITHOUT LIMITATION ANY IMPLIED WARRANTIES OF MERCHANTABILITY, FITNESS FOR A PARTICULAR PURPOSE OR NON-INFRINGEMENT OF THIRD PARTY INTELLECTUAL PROPERTY RIGHTS.

These resources are intended for skilled developers designing with TI products. You are solely responsible for (1) selecting the appropriate TI products for your application, (2) designing, validating and testing your application, and (3) ensuring your application meets applicable standards, and any other safety, security, or other requirements. These resources are subject to change without notice. TI grants you permission to use these resources only for development of an application that uses the TI products described in the resource. Other reproduction and display of these resources is prohibited. No license is granted to any other TI intellectual property right or to any third party intellectual property right. TI disclaims responsibility for, and you will fully indemnify TI and its representatives against, any claims, damages, costs, losses, and liabilities arising out of your use of these resources.

TI’s products are provided subject to TI’s Terms of Sale (www.ti.com/legal/termsofsale.html) or other applicable terms available either on ti.com or provided in conjunction with such TI products. TI’s provision of these resources does not expand or otherwise alter TI’s applicable warranties or warranty disclaimers for TI products.

Mailing Address: Texas Instruments, Post Office Box 655303, Dallas, Texas 75265
Copyright © 2020, Texas Instruments Incorporated