- **Low Supply Voltage Range 1.8 V to 3.6 V**
- **Ultralow-Power Consumption:**
  - **Active Mode: 200 µA at 1 MHz, 2.2 V**
  - **Standby Mode: 0.7 µA**
  - **Off Mode (RAM Retention): 0.1 µA**
- **Five Power Saving Modes**
- **Wake-Up From Standby Mode in less than 6 µs**
- **16-Bit RISC Architecture, 125 ns Instruction Cycle Time**
- **Basic Clock Module Configurations:**
  - **Various Internal Resistors**
  - **Single External Resistor**
  - **32-kHz Crystal**
  - **High Frequency Crystal**
  - **Resonator**
  - **External Clock Source**
- **16-Bit Timer_A With Three Capture/Compare Registers**
- **10-Bit, 200-ksps A/D Converter With Internal Reference, Sample-and-Hold, Autoscan, and Data Transfer Controller**
- **Serial Communication Interface (USART0) With Software-Selectable Asynchronous UART or Synchronous SPI (MSP430x12x2 Only)**
- **Serial Onboard Programming, No External Programming Voltage Needed Programmable Code Protection by Security Fuse**
- **Supply Voltage Brownout Protection**
- **MSP430x11x2 Family Members Include:**
  MSP430F1122: 4KB + 256B Flash Memory 256B RAM
  MSP430F1132: 8KB + 256B Flash Memory 256B RAM
  Available in 20-Pin Plastic SOWB, 20-Pin Plastic TSSOP and 32-Pin QFN Packages
- **MSP430x12x2 Family Members Include:**
  MSP430F1222: 4KB + 256B Flash Memory 256B RAM
  MSP430F1232: 8KB + 256B Flash Memory 256B RAM
  Available in 28-Pin Plastic SOWB, 28-Pin Plastic TSSOP, and 32-Pin QFN Packages
- **For Complete Module Descriptions, See the *MSP430x1xx Family User's Guide*, Literature Number SLAU049**

description

The Texas Instruments MSP430 family of ultralow-power microcontrollers consist of several devices featuring different sets of peripherals targeted for various applications. The architecture, combined with five low power modes is optimized to achieve extended battery life in portable measurement applications. The device features a powerful 16-bit RISC CPU, 16-bit registers, and constant generators that attribute to maximum code efficiency. The digitally controlled oscillator (DCO) allows wake-up from low-power modes to active mode in less than 6µs.

The MSP430x11x2 and MSP430x12x2 series are ultralow-power mixed signal microcontrollers with a built-in 16-bit timer, 10-bit A/D converter with integrated reference and data transfer controller (DTC) and fourteen or twenty-two I/O pins. In addition, the MSP430x12x2 series microcontrollers have built-in communication capability using asynchronous (UART) and synchronous (SPI) protocols.

Digital signal processing with the 16-bit RISC performance enables effective system solutions such as glass breakage detection with signal analysis (including wave digital filter algorithm). Another area of application is in stand-alone RF sensors.

Please be aware that an important notice concerning availability, standard warranty, and use in critical applications of Texas Instruments semiconductor products and disclaimers thereto appears at the end of this data sheet.

PRODUCTION DATA information is current as of publication date. Products conform to specifications per the terms of Texas Instruments standard warranty. Production processing does not necessarily include testing of all parameters.

Copyright © 2002 − 2004, Texas Instruments Incorporated

AVAILABLE OPTIONS

T_A	PACKAGED DEVICES				
	PLASTIC 20-PIN SOWB (DW)	PLASTIC 20-PIN TSSOP (PW)	PLASTIC 28-PIN SOWB (DW)	PLASTIC 28-PIN TSSOP (PW)	PLASTIC 32-PIN QFN (RHB)
−40°C to 85°C	MSP430F1122IDW MSP430F1132IDW	MSP430F1122IPW MSP430F1132IPW	MSP430F1222IDW MSP430F1232IDW	MSP430F1222IPW MSP430F1232IPW	MSP430F1122IRHB MSP430F1132IRHB MSP430F1222IRHB MSP430F1232IRHB

pin designation, MSP430x11x2 (see Notes 1, 2 and 3)

DW or PW PACKAGE
(TOP VIEW)

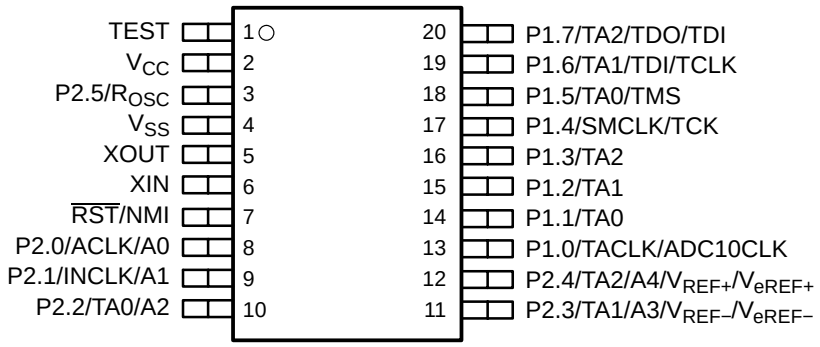

RHB PACKAGE
(TOP VIEW)

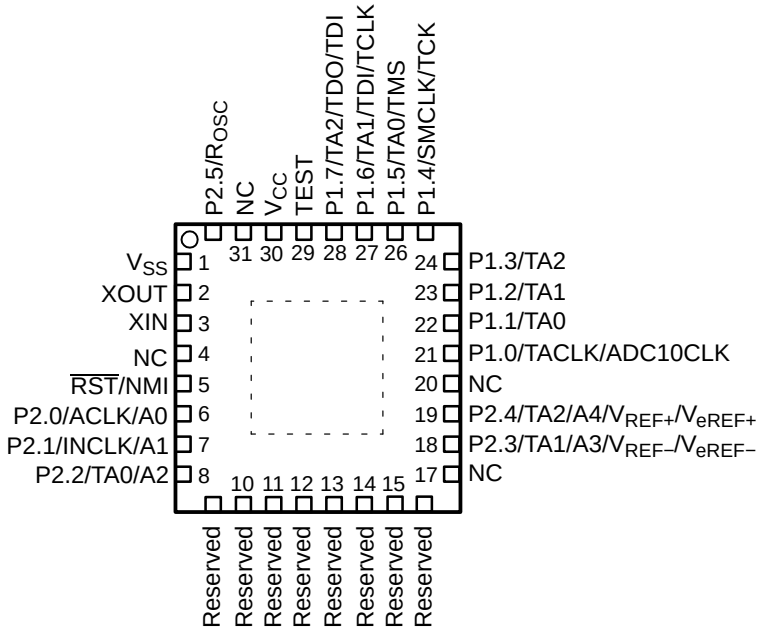

NOTES: 1. NC pins are not internally connected. Recommended connection to V_{SS}.
2. Recommended connection to V_{SS} for all pins labeled “Reserved” to avoid floating nodes, otherwise increased current consumption may occur.
3. Power pad connection to V_{SS} recommended.

pin designation, MSP430x12x2 (see Notes 1 and 2)

DW or PW PACKAGE
(TOP VIEW)

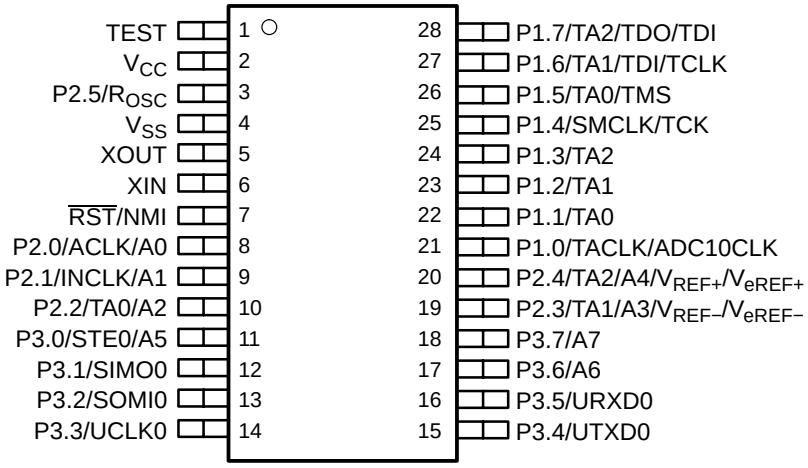

RHB PACKAGE
(TOP VIEW)

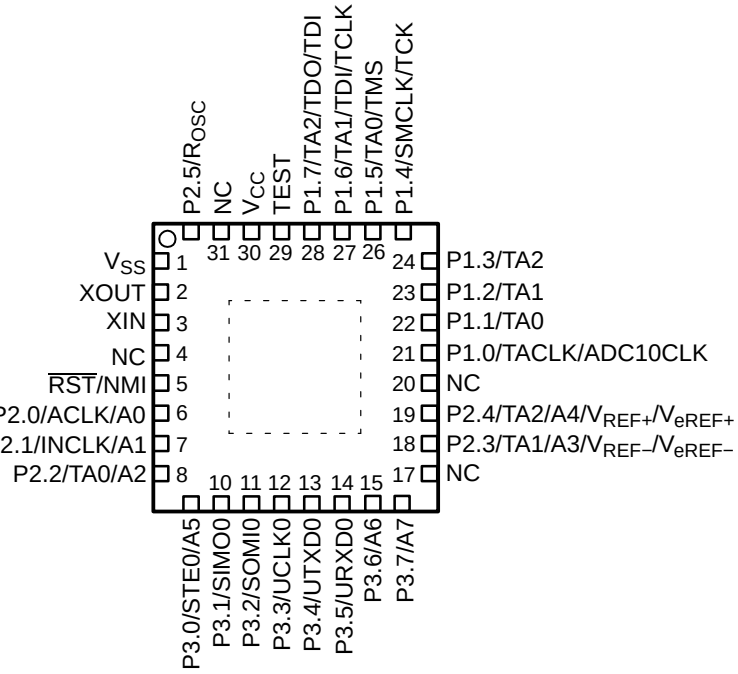

NOTES: 1. NC pins are not internally connected. Recommended connection to V_{SS}.
2. Power pad connection to V_{SS} recommended.

functional block diagram, MSP430x11x2

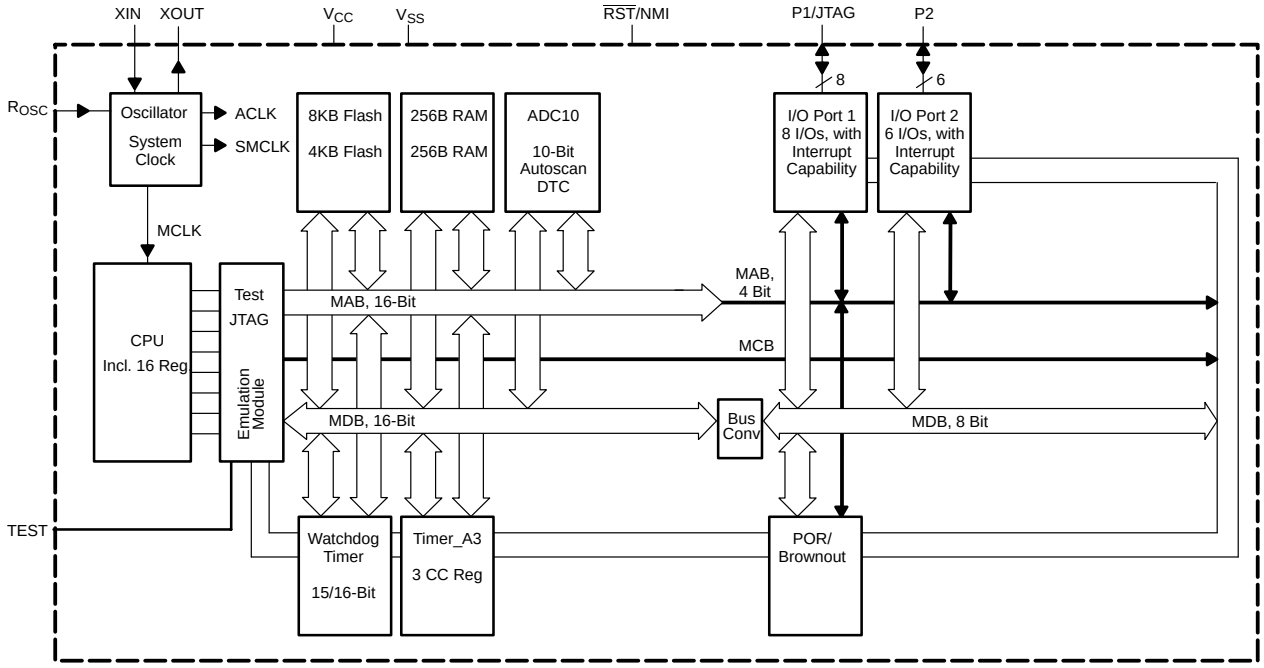

functional block diagram, MSP430x12x2

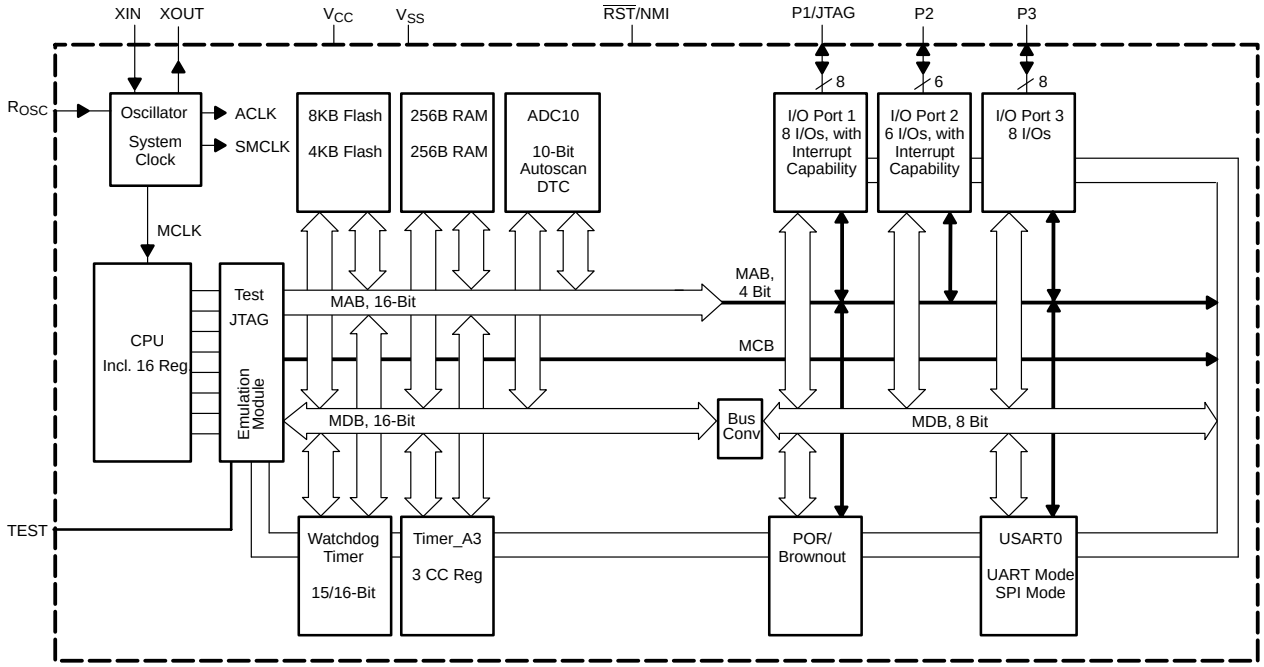

Terminal Functions, MSP430x11x2

TERMINAL			I/O	DESCRIPTION
NAME	DW & PW	RHB		
P1.0/TACLK/ ADC10CLK	13	21	I/O	General-purpose digital I/O pin/Timer_A, clock signal TACLK input/conversion clock—10-bit ADC
P1.1/TA0	14	22	I/O	General-purpose digital I/O pin/Timer_A, capture: CCI0A input, compare: Out0 output/BSL transmit
P1.2/TA1	15	23	I/O	General-purpose digital I/O pin/Timer_A, capture: CCI1A input, compare: Out1 output
P1.3/TA2	16	24	I/O	General-purpose digital I/O pin/Timer_A, capture: CCI2A input, compare: Out2 output
P1.4/SMCLK/TCK	17	25	I/O	General-purpose digital I/O pin/SMCLK signal output/test clock, input terminal for device programming and test
P1.5/TA0/TMS	18	26	I/O	General-purpose digital I/O pin/Timer_A, compare: Out0 output/test mode select, input terminal for device programming and test
P1.6/TA1/TDI/TCLK	19	27	I/O	General-purpose digital I/O pin/Timer_A, compare: Out1 output/test data input terminal or test clock input
P1.7/TA2/TDO/TDI†	20	28	I/O	General-purpose digital I/O pin/Timer_A, compare: Out2 output/test data output terminal or data input during programming
P2.0/ACLK/A0	8	6	I/O	General-purpose digital I/O pin/ACLK output/analog input to 10-bit ADC input A0
P2.1/INCLK/A1	9	7	I/O	General-purpose digital I/O pin/Timer_A, clock signal at INCLK/analog input to 10-bit ADC input A1
P2.2/TA0/A2	10	8	I/O	General-purpose digital I/O pin/Timer_A, capture: CCI0B input, compare: Out0 output/analog input to 10-bit ADC input A2/BSL receive
P2.3/TA1/A3/V_{REF-}/ V_{eREF-}	11	18	I/O	General-purpose digital I/O pin/Timer_A, capture: CCI1B input, compare: Out1 output/analog input to 10-bit ADC input A3/negative reference voltage terminal.
P2.4/TA2/A4/V_{REF+}/ V_{eREF+}	12	19	I/O	General-purpose digital I/O pin/Timer_A, compare: Out2 output/analog input to 10-bit ADC input A4/I/O of positive reference voltage terminal
P2.5/R_{OSC}	3	32	I/O	General-purpose digital I/O pin/Input for external resistor that defines the DCO nominal frequency
$\overline{RST}$/NMI	7	5	I	Reset or nonmaskable interrupt input
TEST	1	29	I	Selects test mode for JTAG pins on P1.x
V_{CC}	2	30		Supply voltage
V_{SS}	4	1		Ground reference
XIN	6	3	I	Input terminal of crystal oscillator
XOUT	5	2	O	Output terminal of crystal oscillator
NC	NA	4,17,20,31		Not connected internally. Recommended connection to V_{SS}.
Reserved	NA	9 - 16		Reserved pins. Recommended connection to V_{SS} to avoid floating nodes, otherwise increased current consumption may occur.
QFN Pad	NA	Package Pad		QFN package pad connection to V_{SS} recommended.

† TDO or TDI is selected via JTAG instruction.

Terminal Functions, MSP430x12x2

TERMINAL			I/O	DESCRIPTION
NAME	DW & PW	RHB		
P1.0/TACLK/ ADC10CLK	21	21	I/O	General-purpose digital I/O pin/Timer_A, clock signal TACLK input/conversion clock—10-bit ADC
P1.1/TA0	22	22	I/O	General-purpose digital I/O pin/Timer_A, capture: CCI0A input, compare: Out0 output/BSL transmit
P1.2/TA1	23	23	I/O	General-purpose digital I/O pin/Timer_A, capture: CCI1A input, compare: Out1 output
P1.3/TA2	24	24	I/O	General-purpose digital I/O pin/Timer_A, capture: CCI2A input, compare: Out2 output
P1.4/SMCLK/TCK	25	25	I/O	General-purpose digital I/O pin/SMCLK signal output/test clock, input terminal for device programming and test
P1.5/TA0/TMS	26	26	I/O	General-purpose digital I/O pin/Timer_A, compare: Out0 output/test mode select, input terminal for device programming and test
P1.6/TA1/TDI/TCLK	27	27	I/O	General-purpose digital I/O pin/Timer_A, compare: Out1 output/test data input terminal or test clock input
P1.7/TA2/TDO/TDI†	28	28	I/O	General-purpose digital I/O pin/Timer_A, compare: Out2 output/test data output terminal or data input during programming
P2.0/ACLK/A0	8	6	I/O	General-purpose digital I/O pin/ACLK output/analog input to 10-bit ADC input A0
P2.1/INCLK/A1	9	7	I/O	General-purpose digital I/O pin/Timer_A, clock signal at INCLK/analog input to 10-bit ADC input A1
P2.2/TA0/A2	10	8	I/O	General-purpose digital I/O pin/Timer_A, capture: CCI0B input, compare: Out0 output/analog input to 10-bit ADC input A2/BSL receive
P2.3/TA1/A3/V_{REF-}/ V_{eREF-}	19	18	I/O	General-purpose digital I/O pin/Timer_A, capture: CCI1B input, compare: Out1 output/analog input to 10-bit ADC input A3/negative reference voltage terminal.
P2.4/TA2/A4/V_{REF+}/ V_{eREF+}	20	19	I/O	General-purpose digital I/O pin/Timer_A, compare: Out2 output/analog input to 10-bit ADC input A4/I/O of positive reference voltage terminal
P2.5/R_{OSC}	3	32	I/O	General-purpose digital I/O pin/Input for external resistor that defines the DCO nominal frequency
P3.0/STE0/A5	11	9	I/O	General-purpose digital I/O pin/slave transmit enable—USART0/SPI mode/analog input to 10-bit ADC input A5
P3.1/SIMO0	12	10	I/O	General-purpose digital I/O pin/slave in/master out of USART0/SPI mode
P3.2/SOMI0	13	11	I/O	General-purpose digital I/O pin/slave out/master in of USART0/SPI mode
P3.3/UCLK0	14	12	I/O	General-purpose digital I/O pin/external clock input—USART0/UART or SPI mode, clock output—USART0/SPI mode clock input
P3.4/UTXD0	15	13	I/O	General-purpose digital I/O pin/transmit data out—USART0/UART mode
P3.5/URXD0	16	14	I/O	General-purpose digital I/O pin/receive data in—USART0/UART mode
P3.6/A6	17	15	I/O	General-purpose digital I/O pin/analog input to 10-bit ADC input A6
P3.7/A7	18	16	I/O	General-purpose digital I/O pin/analog input to 10-bit ADC input A7
$\overline{RST}$/NMI	7	5	I	Reset or nonmaskable interrupt input
TEST	1	29	I	Selects test mode for JTAG pins on P1.x
V_{CC}	2	30		Supply voltage
V_{SS}	4	1		Ground reference
XIN	6	3	I	Input terminal of crystal oscillator
XOUT	5	2	O	Output terminal of crystal oscillator
NC	NA	4,17,20,31		Not connected internally. Recommended connection to V_{SS}.
QFN Pad	NA			QFN package pad connection to V_{SS} recommended.

† TDO or TDI is selected via JTAG instruction.

short-form description

CPU

The MSP430 CPU has a 16-bit RISC architecture that is highly transparent to the application. All operations, other than program-flow instructions, are performed as register operations in conjunction with seven addressing modes for source operand and four addressing modes for destination operand.

The CPU is integrated with 16 registers that provide reduced instruction execution time. The register-to-register operation execution time is one cycle of the CPU clock.

Four of the registers, R0 to R3, are dedicated as program counter, stack pointer, status register, and constant generator respectively. The remaining registers are general-purpose registers.

Peripherals are connected to the CPU using data, address, and control buses, and can be handled with all instructions.

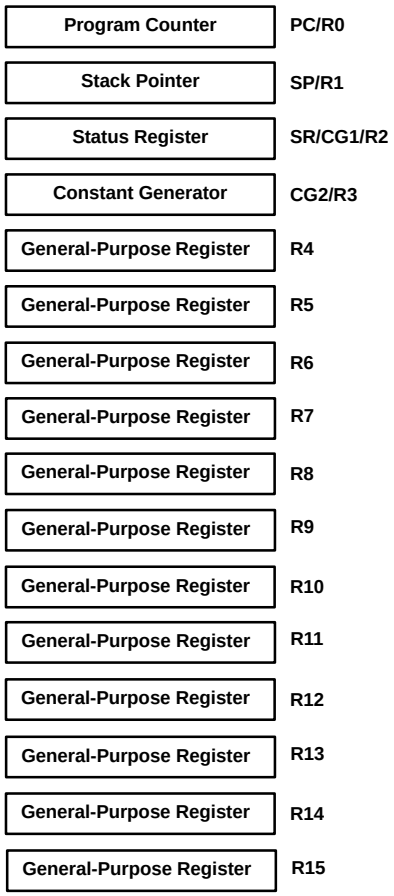

instruction set

The instruction set consists of 51 instructions with three formats and seven address modes. Each instruction can operate on word and byte data. Table 1 shows examples of the three types of instruction formats; the address modes are listed in Table 2.

Table 1. Instruction Word Formats

Dual operands, source-destination	e.g. ADD R4,R5	R4 + R5 −−−> R5
Single operands, destination only	e.g. CALL R8	PC −−>(TOS), R8−−> PC
Relative jump, un/conditional	e.g. JNE	Jump-on-equal bit = 0

Table 2. Address Mode Descriptions

ADDRESS MODE	S	D	SYNTAX	EXAMPLE	OPERATION
Register	●	●	MOV Rs,Rd	MOV R10,R11	R10 −−> R11
Indexed	●	●	MOV X(Rn),Y(Rm)	MOV 2(R5),6(R6)	M(2+R5)−−> M(6+R6)
Symbolic (PC relative)	●	●	MOV EDE,TONI		M(EDE) −−> M(TONI)
Absolute	●	●	MOV &MEM,&TCDAT		M(MEM) −−> M(TCDAT)
Indirect	●		MOV @Rn,Y(Rm)	MOV @R10,Tab(R6)	M(R10) −−> M(Tab+R6)
Indirect autoincrement	●		MOV @Rn+,Rm	MOV @R10+,R11	M(R10) −−> R11 R10 + 2−−> R10
Immediate	●		MOV #X,TONI	MOV #45,TONI	#45 −−> M(TONI)

NOTE: S = source D = destination

operating modes

The MSP430 has one active mode and five software selectable low-power modes of operation. An interrupt event can wake up the device from any of the five low-power modes, service the request and restore back to the low-power mode on return from the interrupt program.

The following six operating modes can be configured by software:

- Active mode AM;
  - All clocks are active
- Low-power mode 0 (LPM0);
  - CPU is disabled
    ACLK and SMCLK remain active. MCLK is disabled
- Low-power mode 1 (LPM1);
  - CPU is disabled
    ACLK and SMCLK remain active. MCLK is disabled
    DCO's dc-generator is disabled if DCO not used in active mode
- Low-power mode 2 (LPM2);
  - CPU is disabled
    MCLK and SMCLK are disabled
    DCO's dc-generator remains enabled
    ACLK remains active
- Low-power mode 3 (LPM3);
  - CPU is disabled
    MCLK and SMCLK are disabled
    DCO's dc-generator is disabled
    ACLK remains active
- Low-power mode 4 (LPM4);
  - CPU is disabled
    ACLK is disabled
    MCLK and SMCLK are disabled
    DCO's dc-generator is disabled
    Crystal oscillator is stopped

interrupt vector addresses

The interrupt vectors and the power-up starting address are located in the address range of 0FFFFh-0FFE0h. The vector contains the 16-bit address of the appropriate interrupt handler instruction sequence.

INTERRUPT SOURCE	INTERRUPT FLAG	SYSTEM INTERRUPT	WORD ADDRESS	PRIORITY
Power-up External reset Watchdog Flash memory	WDTIFG (see Note1) KEYV (see Note 1)	Reset	0FFFEh	15, highest
NMI Oscillator fault Flash memory access violation	NMIIFG (see Notes 1 and 4) OFIFG (see Notes 1 and 4) ACCVIFG (see Notes 1 and 4)	(Non)-maskable (Non)-maskable (Non)-maskable	0FFFCh	14
			0FFFAh	13
			0FFF8h	12
			0FFF6h	11
Watchdog timer	WDTIFG	Maskable	0FFF4h	10
Timer_A3	TACCR0 CCIFG (see Note 2)	Maskable	0FFF2h	9
Timer_A3	TACCR1 and TACCR2 CCIFGs, TAIFG (see Notes 1 and 2)	Maskable	0FFF0h	8
USART0 receive (see Note 5)	URXIFG0	Maskable	0FFEEh	7
USART0 transmit (see Note 5)	UTXIFG0	Maskable	0FFECh	6
ADC10	ADC10IFG	Maskable	0FFEAh	5
			0FFE8h	4
I/O Port P2 (eight flags − see Note 3)	P2IFG.0 to P2IFG.7 (see Notes 1 and 2)	Maskable	0FFE6h	3
I/O Port P1 (eight flags)	P1IFG.0 to P1IFG.7 (see Notes 1 and 2)	Maskable	0FFE4h	2
			0FFE2h	1
			0FFE0h	0, lowest

NOTES:
1. Multiple source flags
2. Interrupt flags are located in the module
3. There are eight Port P2 interrupt flags, but only six Port P2 I/O pins (P2.0−5) are implemented on the ’11x2 and ’12x2 devices.
4. (Non)-maskable: the individual interrupt enable bit can disable an interrupt event, but the general interrupt enable cannot.
5. USART0 is implemented in MSP430x12x2 devices only.

special function registers

Most interrupt and module enable bits are collected into the lowest address space. Special function register bits that are not allocated to a functional purpose are not physically present in the device. Simple software access is provided with this arrangement.

interrupt enable 1 and 2

Address	7	6	5	4	3	2	1	0
0h			ACCVIE	NMIIE			OFIE	WDTIE
			rw-0	rw-0			rw-0	rw-0

WDTIE: Watchdog Timer interrupt enable. Inactive if watchdog mode is selected. Active if Watchdog Timer is configured in interval timer mode.
OFIE: Oscillator fault enable
NMIIE: (Non)maskable interrupt enable
ACCVIE: Flash access violation interrupt enable

Address	7	6	5	4	3	2	1	0
01h							UTXIE0	URXIE0
							rw-0	rw-0

URXIE0: USART0: UART and SPI receive-interrupt enable (MSP430x12x2 devices only)
UTXIE0: USART0: UART and SPI transmit-interrupt enable (MSP430x12x2 devices only)

interrupt flag register 1 and 2

Address	7	6	5	4	3	2	1	0
02h				NMIIFG			OFIFG	WDTIFG
				rw-0			rw-1	rw-(0)

WDTIFG: Set on Watchdog Timer overflow (in watchdog mode) or security key violation. Reset on V_{CC} power-up or a reset condition at $\overline{RST}$/NMI pin in reset mode.
OFIFG: Flag set on oscillator fault
NMIIFG: Set via $\overline{RST}$/NMI-pin

Address	7	6	5	4	3	2	1	0
03h							UTXIFG0	URXIFG0
							rw-1	rw-0

URXIFG0: USART0: UART and SPI receive flag (MSP430x12x2 devices only)
UTXIFG0: USART0: UART and SPI transmit flag (MSP430x12x2 devices only)

module enable registers 1 and 2

Address	7	6	5	4	3	2	1	0
04h								

Address	7	6	5	4	3	2	1	0
05h							UTXE0	URXE0 USPIE0
							rw-0	rw-0

URXE0: USART0: UART mode receive enable (MSP430x12x2 devices only)
UTXE0: USART0: UART mode transmit enable (MSP430x12x2 devices only)
USPIE0: USART0: SPI mode transmit and receive enable (MSP430x12x2 devices only)

Legend		
	rw:	Bit can be read and written.
	rw-0,1:	Bit can be read and written. It is Reset or Set by PUC
	rw-(0,1):	Bit can be read and written. It is Reset or Set by POR
		SFR bit is not present in device.

memory organization

		MSP430F1122	MSP430F1132	MSP430F1222	MSP430F1232
Memory Main: interrupt vector Main: code memory	Size Flash Flash	4KB Flash 0FFFFh−0FFE0h 0FFFFh−0F000h	8KB Flash 0FFFFh−0FFE0h 0FFFFh−0E000h	4KB Flash 0FFFFh−0FFE0h 0FFFFh−0F000h	8KB Flash 0FFFFh−0FFE0h 0FFFFh−0E000h
Information memory	Size Flash	256 Byte 010FFh − 01000h	256 Byte 010FFh − 01000h	256 Byte 010FFh − 01000h	256 Byte 010FFh − 01000h
Boot memory	Size ROM	1KB 0FFFh − 0C00h	1KB 0FFFh − 0C00h	1KB 0FFFh − 0C00h	1KB 0FFFh − 0C00h
RAM	Size	256 Byte 02FFh − 0200h	256 Byte 02FFh − 0200h	256 Byte 02FFh − 0200h	256 Byte 02FFh − 0200h
Peripherals	16-bit 8-bit 8-bit SFR	01FFh − 0100h 0FFh − 010h 0Fh − 00h	01FFh − 0100h 0FFh − 010h 0Fh − 00h	01FFh − 0100h 0FFh − 010h 0Fh − 00h	01FFh − 0100h 0FFh − 010h 0Fh − 00h

bootstrap loader (BSL)

The MSP430 bootstrap loader (BSL) enables users to program the flash memory or RAM using a UART serial interface. Access to the MSP430 memory via the BSL is protected by user-defined password. For complete description of the features of the BSL and its implementation, see the Application report *Features of the MSP430 Bootstrap Loader*, Literature Number SLAA089.

BSL Function	MSP430x11x2 DW & PW Package (20 Pins)	MSP430x12x2 DW & PW Package (28 Pins)	MSP430x11x2/12x2 RHB Package (32 Pins)
Data Transmit	14 - P1.1	22 - P1.1	22 - P1.1
Data Receive	10 - P2.2	10 - P2.2	8 - P2.2

flash memory

The flash memory can be programmed via the JTAG port, the bootstrap loader, or in-system by the CPU. The CPU can perform single-byte and single-word writes to the flash memory. Features of the flash memory include:

- Flash memory has n segments of main memory and two segments of information memory (A and B) of 128 bytes each. Each segment in main memory is 512 bytes in size.
- Segments 0 to n may be erased in one step, or each segment may be individually erased.
- Segments A and B can be erased individually, or as a group with segments 0−n.
  Segments A and B are also called *information memory.*
- New devices may have some bytes programmed in the information memory (needed for test during manufacturing). The user should perform an erase of the information memory prior to the first use.

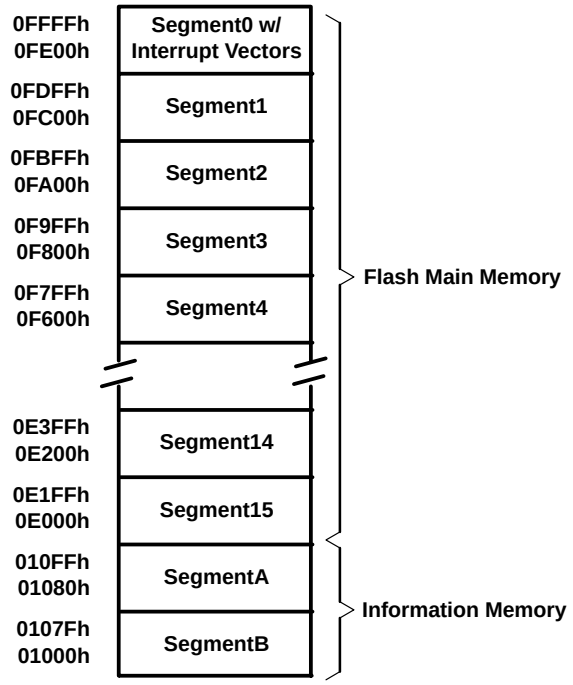

NOTE: All segments not implemented on all devices.

peripherals

Peripherals are connected to the CPU through data, address, and control busses and can be handled using all instructions. For complete module descriptions, see the *MSP430x1xx Family User's Guide*, literature number SLAU049.

oscillator and system clock

The clock system in the MSP430x11x2 and MSP430x12x2 devices is supported by the basic clock module that includes support for a 32768-Hz watch crystal oscillator, an internal digitally-controlled oscillator (DCO) and a high frequency crystal oscillator. The basic clock module is designed to meet the requirements of both low system cost and low-power consumption. The internal DCO provides a fast turn-on clock source and stabilizes in less than 6 µs. The basic clock module provides the following clock signals:

- Auxiliary clock (ACLK), sourced from a 32768-Hz watch crystal or a high frequency crystal.
- Main clock (MCLK), the system clock used by the CPU.
- Sub-Main clock (SMCLK), the sub-system clock used by the peripheral modules.

digital I/O

There are 3 8-bit I/O ports implemented—ports P1, P2, and P3 (only six port P2 I/O signals are available on external pins; port P3 is implemented only on 'x12x2 devices):

- All individual I/O bits are independently programmable.
- Any combination of input, output, and interrupt conditions is possible.
- Edge-selectable interrupt input capability for all the eight bits of ports P1 and six bits of port P2.
- Read/write access to port-control registers is supported by all instructions.

NOTE:
Six bits of port P2, P2.0 to P2.5, are available on external pins, but all control and data bits for port P2 are implemented. Port P3 has no interrupt capability. Port P3 is implemented in MSP430x12x2 only.

brownout

The brownout circuit is implemented to provide the proper internal reset signal to the device during power on and power off.

watchdog timer

The primary function of the watchdog timer (WDT) module is to perform a controlled system restart after a software problem occurs. If the selected time interval expires, a system reset is generated. If the watchdog function is not needed in an application, the module can be configured as an interval timer and can generate interrupts at selected time intervals.

USART0 (MSP430x12x2 Only)

The MSP430x12x2 devices have one hardware universal synchronous/asynchronous receive transmit (USART0) peripheral module that is used for serial data communication. The USART supports synchronous SPI (3 or 4 pin) and asynchronous UART communication protocols, using double-buffered transmit and receive channels.

ADC10

The ADC10 module supports fast, 10-bit analog-to-digital conversions. The module implements a 10-bit SAR core, sample select control, reference generator and data transfer controller, or DTC, for automatic conversion result handling allowing ADC samples to be converted and stored without any CPU intervention.

timer_A3

Timer_A3 is a 16-bit timer/counter with three capture/compare registers. Timer_A3 can support multiple capture/compares, PWM outputs, and interval timing. Timer_A3 also has extensive interrupt capabilities. Interrupts may be generated from the counter on overflow conditions and from each of the capture/compare registers.

Timer_A3 Signal Connections									
Input Pin Number			Device Input Signal	Module Input Name	Module Block	Module Output Signal	Output Pin Number		
DW and PW		RHB					DW and PW		RHB
’11x2 20-Pin	’12x2 28-Pin	’11x2/12x2 32-Pin					’11x2 20-Pin	’12x2 28-Pin	’11x2/12x2 32-Pin
13 - P1.0	21 - P1.0	21 - P1.0	TACLK	TACLK	Timer	NA			
			ACLK	ACLK					
			SMCLK	SMCLK					
9 - P2.1	9 - P2.1	7 - P2.1	INCLK	INCLK					
14 - P1.1	22 - P1.1	22 - P1.1	TA0	CCI0A	CCR0	TA0	14 - P1.1	22 - P1.1	22 - P1.1
10 - P2.2	10 - P2.2	8 - P2.2	TA0	CCI0B			18 - P1.5	26 - P1.5	26 - P1.5
			DV_{SS}	GND			10 - P2.2	10 - P2.2	8 - P2.2
			DV_{CC}	V_{CC}			ADC10 Internal		
15 - P1.2	23 - P1.2	23 - P1.2	TA1	CCI1A	CCR1	TA1	15 - P1.2	23 - P1.2	23 - P1.2
11 - P2.3	19 - P2.3	18 - P2.3	TA1	CCI1B			19 - P1.6	27 - P1.6	27 - P1.6
			DV_{SS}	GND			11 - P2.3	19 - P2.3	18 - P2.3
			DV_{CC}	V_{CC}			ADC10 Internal		
16 - P1.3	24 - P1.3	24 - P1.3	TA2	CCI2A	CCR2	TA2	16 - P1.3	24 - P1.3	24 - P1.3
			ACLK (internal)	CCI2B			20 - P1.7	28 - P1.7	28 - P1.7
			DV_{SS}	GND			12 - P2.4	20 - P2.4	19 - P2.4
			DV_{CC}	V_{CC}			ADC10 Internal		

peripheral file map

PERIPHERALS WITH WORD ACCESS			
ADC10	ADC data transfer start address	ADC10SA	1BCh
	ADC memory	ADC10MEM	1B4h
	ADC control register 1	ADC10CTL1	1B2h
	ADC control register 0	ADC10CTL0	1B0h
	ADC analog enable	ADC10AE	04Ah
	ADC data transfer control register 1	ADC10DTC1	049h
	ADC data transfer control register 0	ADC10DTC0	048h
Timer_A	Reserved		017Eh
	Reserved		017Ch
	Reserved		017Ah
	Reserved		0178h
	Capture/compare register	TACCR2	0176h
	Capture/compare register	TACCR1	0174h
	Capture/compare register	TACCR0	0172h
	Timer_A register	TAR	0170h
	Reserved		016Eh
	Reserved		016Ch
	Reserved		016Ah
	Reserved		0168h
	Capture/compare control	TACCTL2	0166h
	Capture/compare control	TACCTL1	0164h
	Capture/compare control	TACCTL0	0162h
	Timer_A control	TACTL	0160h
	Timer_A interrupt vector	TAIV	012Eh
Flash Memory	Flash control 3	FCTL3	012Ch
	Flash control 2	FCTL2	012Ah
	Flash control 1	FCTL1	0128h
Watchdog	Watchdog/timer control	WDTCTL	0120h
PERIPHERALS WITH BYTE ACCESS			
USART0 (in MSP430x12x2 only)	Transmit buffer	U0TXBUF	077h
	Receive buffer	U0RXBUF	076h
	Baud rate	U0BR1	075h
	Baud rate	U0BR0	074h
	Modulation control	U0MCTL	073h
	Receive control	U0RCTL	072h
	Transmit control	U0TCTL	071h
	USART control	U0CTL	070h
Basic Clock	Basic clock sys. control2	BCSCTL2	058h
	Basic clock sys. control1	BCSCTL1	057h
	DCO clock freq. control	DCOCTL	056h
Port P2	Port P2 selection	P2SEL	02Eh
	Port P2 interrupt enable	P2IE	02Dh
	Port P2 interrupt edge select	P2IES	02Ch
	Port P2 interrupt flag	P2IFG	02Bh
	Port P2 direction	P2DIR	02Ah
	Port P2 output	P2OUT	029h
	Port P2 input	P2IN	028h
Port P1	Port P1 selection	P1SEL	026h
	Port P1 interrupt enable	P1IE	025h
	Port P1 interrupt edge select	P1IES	024h
	Port P1 interrupt flag	P1IFG	023h
	Port P1 direction	P1DIR	022h
	Port P1 output	P1OUT	021h
	Port P1 input	P1IN	020h

peripheral file map (continued)

PERIPHERALS WITH BYTE ACCESS (CONTINUED)			
Port P3 (in MSP430x12x2 only)	Port P3 selection Port P3 direction Port P3 output Port P3 input	P3SEL P3DIR P3OUT P3IN	01Bh 01Ah 019h 018h
Special Function	Module enable2 Module enable1 SFR interrupt flag2 SFR interrupt flag1 SFR interrupt enable2 SFR interrupt enable1	ME2 ME1 IFG2 IFG1 IE2 IE1	005h 004h 003h 002h 001h 000h

absolute maximum ratings†

Voltage applied at V_{CC} to V_{SS} . . . . . −0.3 V to 4.1 V
Voltage applied to any pin (see Note) . . . . . −0.3 V to V_{CC} + 0.3 V
Diode current at any device terminal . . . . . ±2 mA
Storage temperature, T_{stg} (unprogrammed device) . . . . . −55°C to 150°C
Storage temperature, T_{stg} (programmed device) . . . . . −40°C to 85°C

† Stresses beyond those listed under “absolute maximum ratings” may cause permanent damage to the device. These are stress ratings only, and functional operation of the device at these or any other conditions beyond those indicated under “recommended operating conditions” is not implied. Exposure to absolute-maximum-rated conditions for extended periods may affect device reliability.

NOTE: All voltages referenced to V_{SS}. The JTAG fuse-blow voltage, V_{FB}, is allowed to exceed the absolute maximum rating. The voltage is applied to the TEST pin when blowing the JTAG fuse.

recommended operating conditions

			MIN	NOM	MAX	UNITS
Supply voltage during program execution, V_{CC} (see Note 1)		MSP430F11x2 MSP430F12x2	1.8		3.6	V
Supply voltage during program/erase flash memory, V_{CC}			2.7		3.6	V
Supply voltage, V_{SS}				0		V
Operating free-air temperature range, T_A		MSP430F11x2 MSP430F12x2	−40		85	°C
LFXT1 crystal frequency, $f_{(LFXT1)}$ (see Note 1 & Note 2)	LF mode selected, XTS=0	Watch crystal		32 768		Hz
	XT1 selected mode, XTS=1	Ceramic resonator	450		8000	kHz
		Crystal	1000		8000	
Processor frequency $f_{(system)}$ (MCLK signal)		V_{CC} = 1.8 V, MSP430F11x2 MSP430F12x2	dc		4.15	MHz
		V_{CC} = 3.6 V, MSP430F11x2 MSP430F12x2	dc		8	

NOTES: 1. The LFXT1 oscillator in LF-mode requires a resistor of 5.1 MΩ from XOUT to V_{SS} when V_{CC} <2.5 V.
The LFXT1 oscillator in XT1-mode accepts a ceramic resonator or a crystal frequency of 4 MHz at $V_{CC} \geq 2.2$ V.
The LFXT1 oscillator in XT1-mode accepts a ceramic resonator or a crystal frequency of 8 MHz at $V_{CC} \geq 2.8$ V.
2. The LFXT1 oscillator in LF-mode requires a watch crystal.
The LFXT1 oscillator in XT1-mode accepts a ceramic resonator or a crystal.

electrical characteristics over recommended ranges of supply voltage and operating free-air temperature (unless otherwise noted)

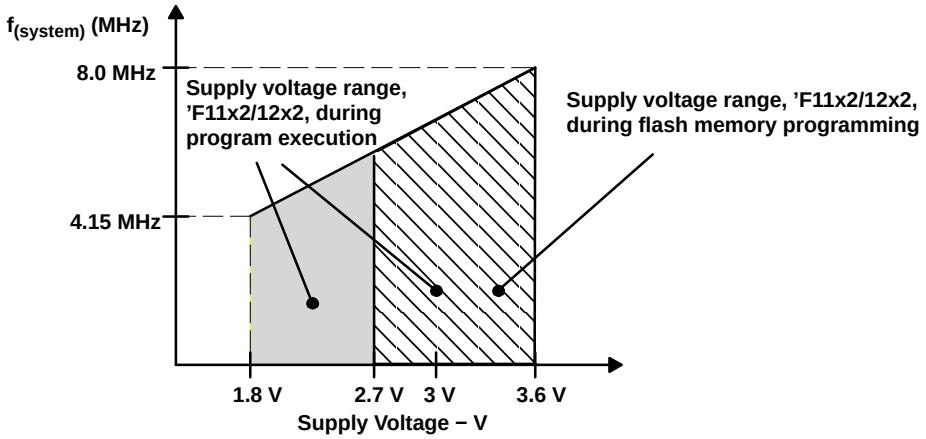

NOTE: Minimum processor frequency is defined by system clock. Flash program or erase operations require a minimum V_{CC} of 2.7 V.

Figure 1. Frequency vs Supply Voltage

supply current (into V_{CC}) excluding external current

PARAMETER		TEST CONDITIONS		MIN	TYP	MAX	UNIT
$I_{(AM)}$	Active mode	T_A = −40°C +85°C, $f_{MCLK} = f_{(SMCLK)}$ = 1 MHz, $f_{(ACLK)}$ = 32,768 Hz, Program executes in Flash	V_{CC} = 2.2 V		200	250	µA
			V_{CC} = 3 V		300	350	
		T_A = −40°C +85°C, $f_{(MCLK)} = f_{(SMCLK)} = f_{(ACLK)}$ = 4096 Hz, Program executes in Flash	V_{CC} = 2.2 V		3	5	µA
			V_{CC} = 3 V		11	18	
$I_{(CPUOff)}$	Low-power mode, (LPM0)	T_A = −40°C +85°C, $f_{(MCLK)}$ = 0, $f_{(SMCLK)}$ = 1 MHz, $f_{(ACLK)}$ = 32,768 Hz	V_{CC} = 2.2 V		32	45	µA
			V_{CC} = 3 V		55	70	
$I_{(LPM2)}$	Low-power mode, (LPM2)	T_A = −40°C +85°C, $f_{(MCLK)} = f_{(SMCLK)}$ = 0 MHz, $f_{(ACLK)}$ = 32,768 Hz, SCG0 = 0	V_{CC} = 2.2 V		11	14	µA
			V_{CC} = 3 V		17	22	
$I_{(LPM3)}$	Low-power mode, (LPM3)	T_A = −40°C	V_{CC} = 2.2 V		0.8	1.2	µA
		T_A = 25°C			0.7	1	
		T_A = 85°C			1.6	2.3	
		T_A = −40°C	V_{CC} = 3 V		1.8	2.2	µA
		T_A = 25°C			1.6	1.9	
		T_A = 85°C			2.3	3.4	
$I_{(LPM4)}$	Low-power mode, (LPM4)	T_A = −40°C	V_{CC} = 2.2 V/3 V		0.1	0.5	µA
		T_A = 25°C			0.1	0.5	
		T_A = 85°C			0.8	1.9	

NOTES: 1. All inputs are tied to 0 V or V_{CC}. Outputs do not source or sink any current.

current consumption of active mode versus system frequency

$$I_{AM} = I_{AM[1\ MHz]} \times f_{system}\ [MHz]$$

current consumption of active mode versus supply voltage

$$I_{AM} = I_{AM[3\ V]} + 120\ \mu A/V \times (V_{CC} - 3\ V)$$

electrical characteristics over recommended ranges of supply voltage and operating free-air temperature (unless otherwise noted) (continued)

Schmitt-trigger inputs Port P1 to Port P3; P1.0 to P1.7, P2.0 to P2.5, P3.0 to P3.7

PARAMETER		TEST CONDITIONS	MIN	TYP	MAX	UNIT
V_{IT+}	Positive-going input threshold voltage	V_{CC} = 2.2 V	1.1		1.5	V
		V_{CC} = 3 V	1.5		1.9	
V_{IT-}	Negative-going input threshold voltage	V_{CC} = 2.2 V	0.4		0.9	V
		V_{CC} = 3 V	0.9		1.3	
V_{hys}	Input voltage hysteresis, ($V_{IT+} - V_{IT-}$)	V_{CC} = 2.2 V	0.3		1.1	V
		V_{CC} = 3 V	0.5		1	

standard inputs − $\overline{RST}$/NMI, TEST; JTAG: TCK, TMS, TDI/TCLK

PARAMETER		TEST CONDITIONS	MIN	TYP	MAX	UNIT
V_{IL}	Low-level input voltage	V_{CC} = 2.2 V / 3 V	V_{SS}		V_{SS}+0.6	V
V_{IH}	High-level input voltage		0.8×V_{CC}		V_{CC}	V

inputs Px.x, TAx

PARAMETER		TEST CONDITIONS	V_{CC}	MIN	TYP	MAX	UNIT
$t_{(int)}$	External interrupt timing	Port P1, P2: P1.x to P2.x, External trigger signal for the interrupt flag, (see Note 1)	2.2 V/3 V	1.5			cycle
			2.2 V	62			ns
			3 V	50			
$t_{(cap)}$	Timer_A, capture timing	TA0, TA1, TA2	2.2 V	62			ns
			3 V	50			
$f_{(TAext)}$	Timer_A clock frequency externally applied to pin	TACLK, INCLK $t_{(H)} = t_{(L)}$	2.2 V			8	MHz
			3 V			10	
$f_{(TAint)}$	Timer_A clock frequency	SMCLK or ACLK signal selected	2.2 V			8	MHz
			3 V			10	

NOTES: 1. The external signal sets the interrupt flag every time the minimum $t_{(int)}$ cycle and time parameters are met. It may be set even with trigger signals shorter than $t_{(int)}$. Both the cycle and timing specifications must be met to ensure the flag is set. $t_{(int)}$ is measured in MCLK cycles.

leakage current

PARAMETER		TEST CONDITIONS	V_{CC}	MIN	TYP	MAX	UNIT
$I_{lkg(Px.x)}$	High-impedance leakage current	Port P1: P1.x, 0 ≤ × ≤ 7 (see Notes 1 and 2)	2.2 V/3 V			±50	nA
		Port P2: P2.x, 0 ≤ × ≤ 5 (see Notes 1 and 2)	2.2 V/3 V			±50	

NOTES: 1. The leakage current is measured with V_{SS} or V_{CC} applied to the corresponding pin(s), unless otherwise noted.
2. The leakage of the digital port pins is measured individually. The port pin must be selected for input and there must be no optional pullup or pulldown resistor.

electrical characteristics over recommended ranges of supply voltage and operating free-air temperature (unless otherwise noted) (continued)

outputs Port 1 to Port 3; P1.0 to P1.7, P2.0 to P2.5, P3.0 to P3.7

PARAMETER		TEST CONDITIONS			MIN	TYP	MAX	UNIT
V_{OH}	High-level output voltage	$I_{(OHmax)}$ = −1.5 mA	V_{CC} = 2.2 V	See Note 1	V_{CC}−0.25		V_{CC}	V
		$I_{(OHmax)}$ = −6 mA		See Note 2	V_{CC}−0.6		V_{CC}	
		$I_{(OHmax)}$ = −1.5 mA	V_{CC} = 3 V	See Note 1	V_{CC}−0.25		V_{CC}	
		$I_{(OHmax)}$ = −6 mA		See Note 2	V_{CC}−0.6		V_{CC}	
V_{OL}	Low-level output voltage	$I_{(OLmax)}$ = 1.5 mA	V_{CC} = 2.2 V	See Note 1	V_{SS}		V_{SS}+0.25	V
		$I_{(OLmax)}$ = 6 mA		See Note 2	V_{SS}		V_{SS}+0.6	
		$I_{(OLmax)}$ = 1.5 mA	V_{CC} = 3 V	See Note 1	V_{SS}		V_{SS}+0.25	
		$I_{(OLmax)}$ = 6 mA		See Note 2	V_{SS}		V_{SS}+0.6	

NOTES: 1. The maximum total current, I_{OHmax} and I_{OLmax}, for all outputs combined, should not exceed ±12 mA to hold the maximum voltage drop specified.
2. The maximum total current, I_{OHmax} and I_{OLmax}, for all outputs combined, should not exceed ±48 mA to hold the maximum voltage drop specified.

outputs P1.x, P2.x, P3.x, TAx

PARAMETER		TEST CONDITIONS		V_{CC}	MIN	TYP	MAX	UNIT
$f_{(P20)}$	Output frequency	P2.0/ACLK, C_L = 20 pF		2.2 V/3 V			f_{System}	MHz
$f_{(TAx)}$		TA0, TA1, TA2, C_L = 20 pF, Internal clock source, SMCLK signal applied (see Note 1)		2.2 V/3 V	dc		f_{System}	
$t_{(Xdc)}$	Duty cycle of O/P frequency	P1.4/SMCLK, C_L = 20 pF	$f_{SMCLK} = f_{LFXT1} = f_{XT1}$	2.2 V/3 V	40%		60%	
			$f_{SMCLK} = f_{LFXT1} = f_{LF}$		35%		65%	
			$f_{SMCLK} = f_{LFXT1/n}$		50%− 15 ns	50%	50%+ 15 ns	
			$f_{SMCLK} = f_{DCOCLK}$	2.2 V/3 V	50%− 15 ns	50%	50%+ 15 ns	
		P2.0/ACLK, C_L = 20 pF	$f_{P20} = f_{LFXT1} = f_{XT1}$	2.2 V/3 V	40%		60%	
			$f_{P20} = f_{LFXT1} = f_{LF}$		30%		70%	
			$f_{P20} = f_{LFXT1/n}$			50%		
$t_{(TAdc)}$		TA0, TA1, TA2,	C_L = 20 pF, Duty cycle = 50%	2.2 V/3 V		0	±50	ns

NOTES: 1. The limits of the system clock MCLK has to be met. MCLK and SMCLK can have different frequencies.

electrical characteristics over recommended ranges of supply voltage and operating free-air temperature (unless otherwise noted) (continued)

outputs − Ports P1, P2, and P3 (see Note)

TYPICAL LOW-LEVEL OUTPUT CURRENT vs LOW-LEVEL OUTPUT VOLTAGE

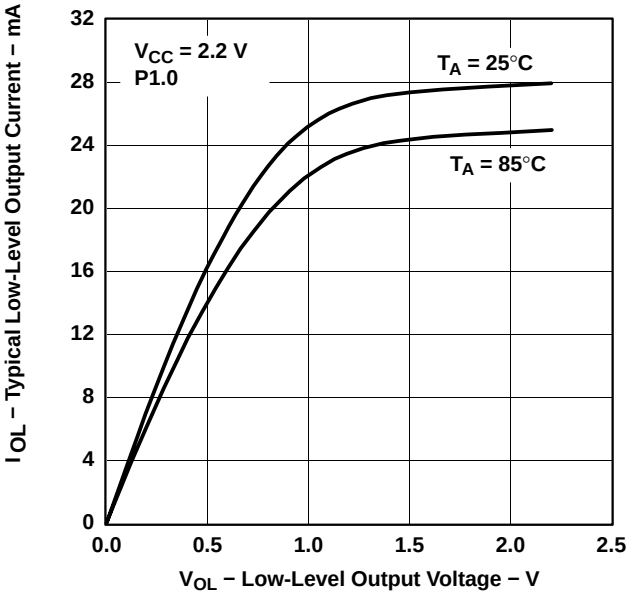

Figure 2

TYPICAL LOW-LEVEL OUTPUT CURRENT vs LOW-LEVEL OUTPUT VOLTAGE

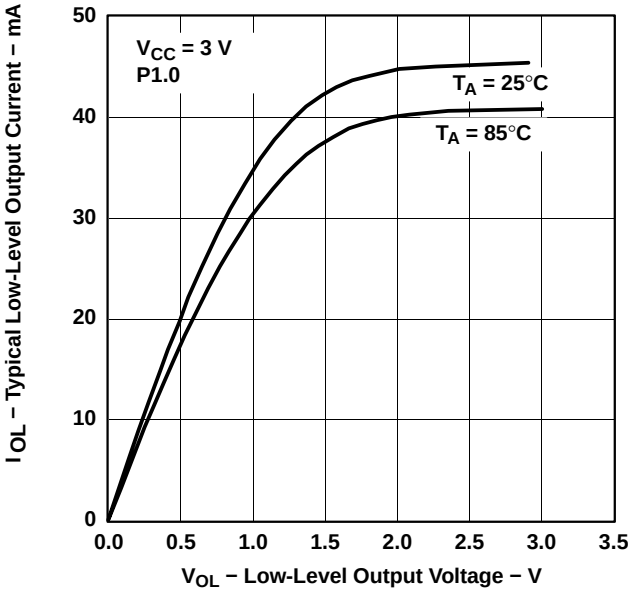

Figure 3

TYPICAL HIGH-LEVEL OUTPUT CURRENT vs HIGH-LEVEL OUTPUT VOLTAGE

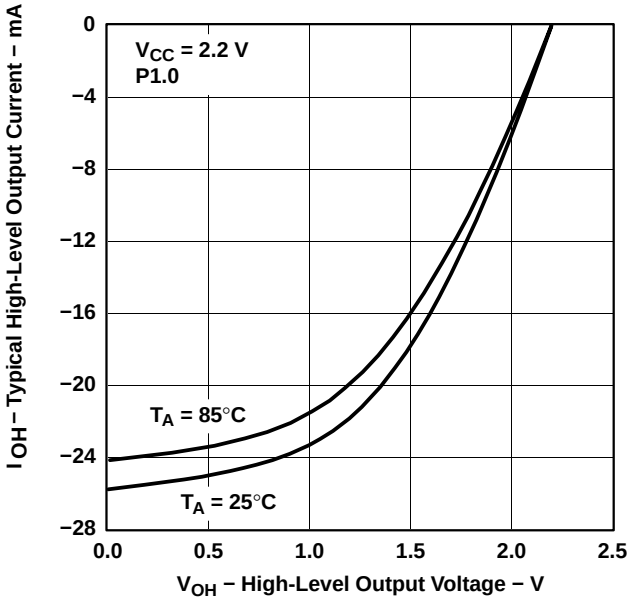

Figure 4

TYPICAL HIGH-LEVEL OUTPUT CURRENT vs HIGH-LEVEL OUTPUT VOLTAGE

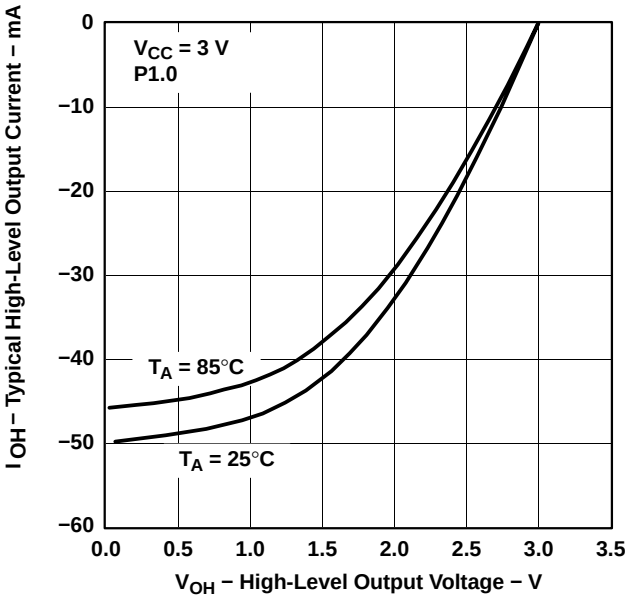

Figure 5

NOTE: Only one output is loaded at a time.

electrical characteristics over recommended ranges of supply voltage and operating free-air temperature (unless otherwise noted) (continued)

wake-up from lower power modes (LPMx)

PARAMETER		TEST CONDITIONS		MIN	TYP	MAX	UNIT
$t_{(LPM0)}$	Delay time (see Note 1)	V_{CC} = 2.2 V/3 V			100		ns
$t_{(LPM2)}$		V_{CC} = 2.2 V/3 V			100		ns
$t_{(LPM3)}$		$f_{(MCLK)}$ = 1 MHz,	V_{CC} = 2.2 V/3 V			6	µs
		$f_{(MCLK)}$ = 2 MHz,	V_{CC} = 2.2 V/3 V			6	µs
		$f_{(MCLK)}$ = 3 MHz,	V_{CC} = 2.2 V/3 V			6	µs
$t_{(LPM4)}$		$f_{(MCLK)}$ = 1 MHz,	V_{CC} = 2.2 V/3 V			6	µs
		$f_{(MCLK)}$ = 2 MHz,	V_{CC} = 2.2 V/3 V			6	µs
		$f_{(MCLK)}$ = 3 MHz,	V_{CC} = 2.2 V/3 V			6	µs

NOTES: 1. Parameter applicable only if DCOCLK is used for MCLK.

USART (see Note 1)

PARAMETER		TEST CONDITIONS	MIN	TYP	MAX	UNIT
$t_{(\tau)}$	USART: deglitch time	V_{CC} = 2.2 V	200	430	800	ns
		V_{CC} = 3 V	150	280	500	ns

NOTES: 1. The signal applied to the USART receive signal/terminal (URXD) should meet the timing requirements of $t_{(\tau)}$ to ensure that the URXS flip-flop is set. The URXS flip-flop is set with negative pulses meeting the minimum-timing condition of $t_{(\tau)}$. The operating conditions to set the flag must be met independently from this timing constraint. The deglitch circuitry is active only on negative transitions on the URXD line.

RAM

PARAMETER		MIN	NOM	MAX	UNIT
$V_{(RAMh)}$	CPU halted (see Note 1)	1.6			V

NOTES: 1. This parameter defines the minimum supply voltage V_{CC} when the data in the program memory RAM remains unchanged. No program execution should happen during this supply voltage condition.

POR brownout, reset (see Notes 1 and 2)

PARAMETER		TEST CONDITIONS	MIN	TYP	MAX	UNIT
$t_{d(BOR)}$	Brownout				2000	µs
$V_{CC(start)}$		$dV_{CC}/dt \le 3$ V/s		$0.7 \times V_{(B_IT-)}$		V
$V_{(B_IT-)}$		$dV_{CC}/dt \le 3$ V/s			1.71	V
$V_{hys(B_IT-)}$		$dV_{CC}/dt \le 3$ V/s	70	130	180	mV
$t_{(reset)}$		Pulse length needed at $\overline{RST}$/NMI pin to accepted reset internally, V_{CC} = 2.2 V/3 V	2			µs

NOTES: 1. The current consumption of the brown-out module is already included in the I_{CC} current consumption data.
2. During power up, the CPU begins code execution following a period of $t_{d(BOR)}$ after $V_{CC} = V_{(B_IT-)} + V_{hys(B_IT-)}$. The default DCO settings must not be changed until $V_{CC} \ge V_{CC(min)}$, where $V_{CC(min)}$ is the minimum supply voltage for the desired operating frequency. See the *MSP430x1xx Family User's Guide* for more information on the brownout circuit.

electrical characteristics over recommended ranges of supply voltage and operating free-air temperature (unless otherwise noted) (continued)

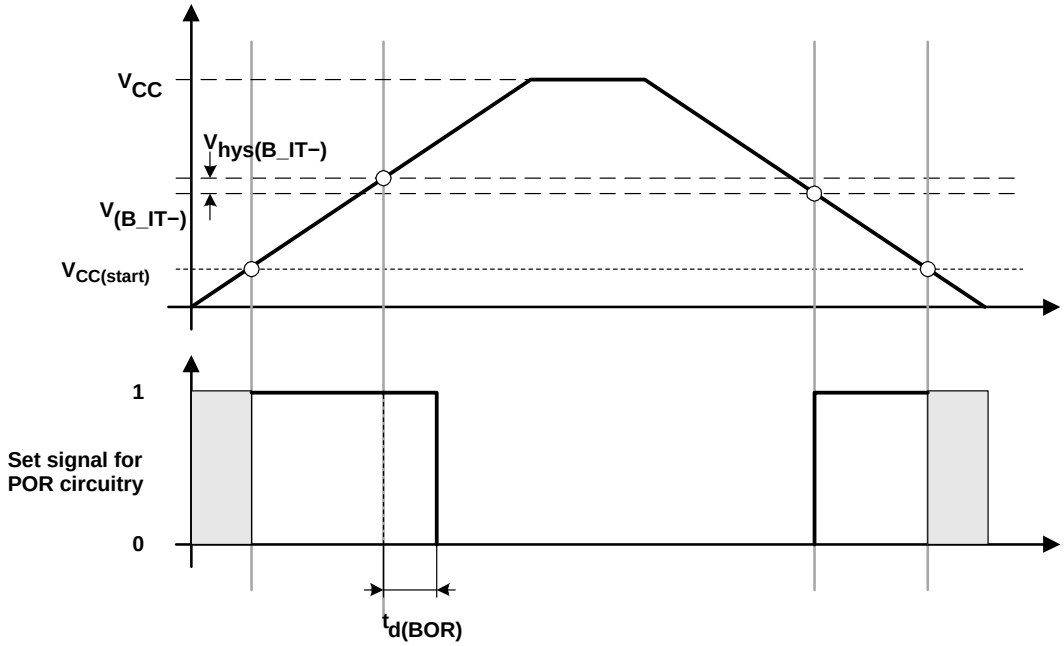

Figure 6. POR/Brownout Reset (BOR) vs Supply Voltage

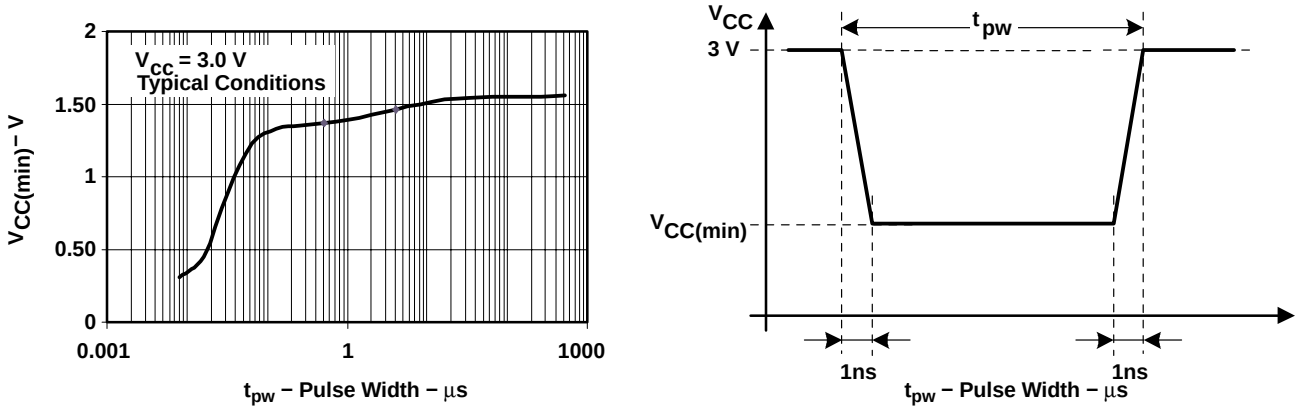

Figure 7. $V_{CC(min)}$ Level With a Square Voltage Drop to Generate a POR/Brownout Signal

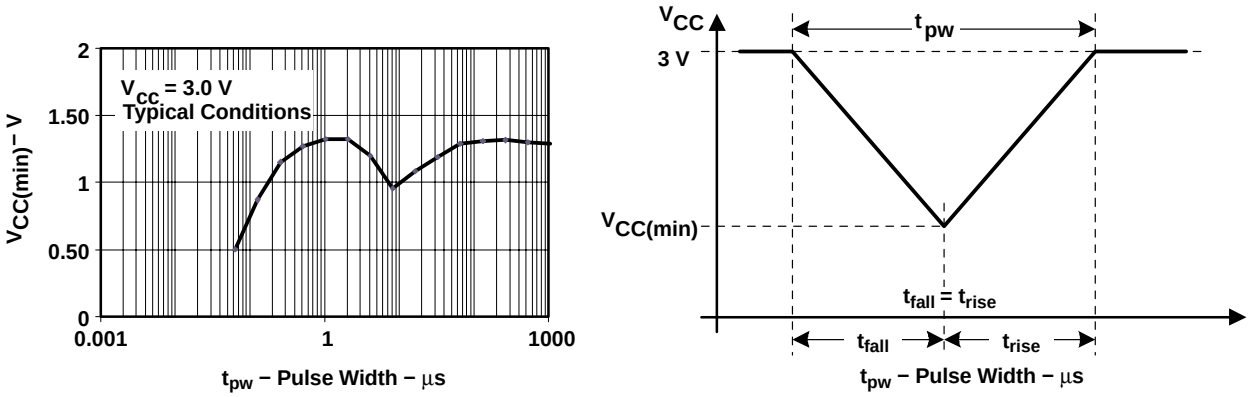

Figure 8. $V_{CC(min)}$ Level With a Triangle Voltage Drop to Generate a POR/Brownout Signal

electrical characteristics over recommended ranges of supply voltage and operating free-air temperature (unless otherwise noted) (continued)

DCO

PARAMETER	TEST CONDITIONS	V_{CC}	MIN	TYP	MAX	UNIT
$f_{(DCO03)}$	R_{sel} = 0, DCO = 3, MOD = 0, DCOR = 0, T_A = 25°C	2.2 V	0.08	0.12	0.15	MHz
		3 V	0.08	0.13	0.16	
$f_{(DCO13)}$	R_{sel} = 1, DCO = 3, MOD = 0, DCOR = 0, T_A = 25°C	2.2 V	0.14	0.19	0.23	MHz
		3 V	0.14	0.18	0.22	
$f_{(DCO23)}$	R_{sel} = 2, DCO = 3, MOD = 0, DCOR = 0, T_A = 25°C	2.2 V	0.22	0.3	0.36	MHz
		3 V	0.22	0.28	0.34	
$f_{(DCO33)}$	R_{sel} = 3, DCO = 3, MOD = 0, DCOR = 0, T_A = 25°C	2.2 V	0.37	0.49	0.59	MHz
		3 V	0.37	0.47	0.56	
$f_{(DCO43)}$	R_{sel} = 4, DCO = 3, MOD = 0, DCOR = 0, T_A = 25°C	2.2 V	0.61	0.77	0.93	MHz
		3 V	0.61	0.75	0.9	
$f_{(DCO53)}$	R_{sel} = 5, DCO = 3, MOD = 0, DCOR = 0, T_A = 25°C	2.2 V	1	1.2	1.5	MHz
		3 V	1	1.3	1.5	
$f_{(DCO63)}$	R_{sel} = 6, DCO = 3, MOD = 0, DCOR = 0, T_A = 25°C	2.2 V	1.6	1.9	2.2	MHz
		3 V	1.69	2	2.29	
$f_{(DCO73)}$	R_{sel} = 7, DCO = 3, MOD = 0, DCOR = 0, T_A = 25°C	2.2 V	2.4	2.9	3.4	MHz
		3 V	2.7	3.2	3.65	
$f_{(DCO77)}$	R_{sel} = 7, DCO = 7, MOD = 0, DCOR = 0, T_A = 25°C	2.2 V	4	4.5	4.9	MHz
		3 V	4.4	4.9	5.4	
$f_{(DCO47)}$	R_{sel} = 4, DCO = 7, MOD = 0, DCOR = 0, T_A = 25°C	2.2 V/3 V	f_{DCO40} x1.7	f_{DCO40} x2.1	f_{DCO40} x2.5	MHz
$S_{(Rsel)}$	$S_R = f_{Rsel+1}/f_{Rsel}$	2.2 V/3 V	1.35	1.65	2	ratio
$S_{(DCO)}$	$S_{DCO} = f_{DCO+1}/f_{DCO}$	2.2 V/3 V	1.07	1.12	1.16	
D_t	Temperature drift, R_{sel} = 4, DCO = 3, MOD = 0 (see Note 1)	2.2 V	−0.31	−0.36	−0.4	%/°C
		3 V	−0.33	−0.38	−0.43	
D_V	Drift with V_{CC} variation, R_{sel} = 4, DCO = 3, MOD = 0 (see Note 1)	2.2 V/3 V			±5	%/V

NOTES: 1. These parameters are not production tested.

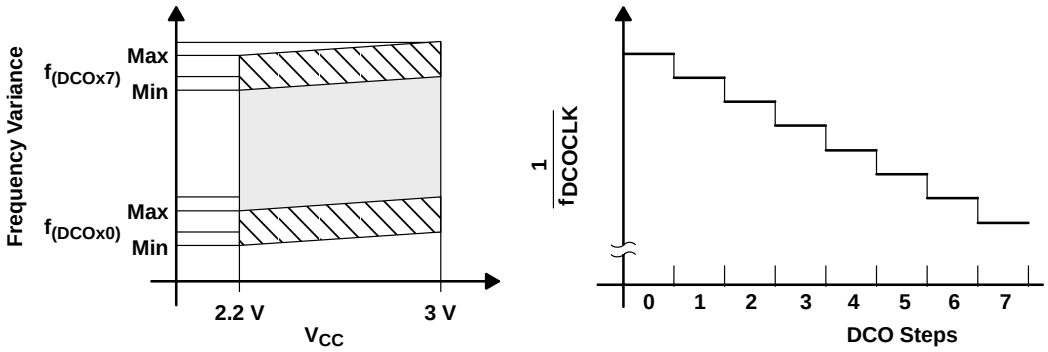

Figure 9. DCO Characteristics

electrical characteristics over recommended ranges of supply voltage and operating free-air temperature (unless otherwise noted) (continued)

main DCO characteristics

- Individual devices have a minimum and maximum operation frequency. The specified parameters for $f_{(DCOx0)}$ to $f_{(DCOx7)}$ are valid for all devices.
- All ranges selected by Rsel(n) overlap with Rsel(n+1): Rsel0 overlaps Rsel1, ... Rsel6 overlaps Rsel7.
- DCO control bits DCO0, DCO1, and DCO2 have a step size as defined by parameter S_{DCO}.
- Modulation control bits MOD0 to MOD4 select how often $f_{(DCO+1)}$ is used within the period of 32 DCOCLK cycles. The frequency $f_{(DCO)}$ is used for the remaining cycles. The frequency is an average equal to:

$$f_{average} = \frac{32 \times f_{(DCO)} \times f_{(DCO+1)}}{MOD \times f_{(DCO)} + (32 - MOD) \times f_{(DCO+1)}}$$

DCO when using R_{OSC} (see Note 1)

PARAMETER	TEST CONDITIONS	V_{CC}	MIN	NOM	MAX	UNIT
f_{DCO}, DCO output frequency	R_{sel} = 4, DCO = 3, MOD = 0, DCOR = 1, T_A = 25°C	2.2 V		1.8±15%		MHz
		3 V		1.95±15%		MHz
D_t, Temperature drift	R_{sel} = 4, DCO = 3, MOD = 0, DCOR = 1	2.2 V/3 V		±0.1		%/°C
D_v, Drift with V_{CC} variation	R_{sel} = 4, DCO = 3, MOD = 0, DCOR = 1	2.2 V/3 V		10		%/V

NOTES: 1. R_{OSC} = 100kΩ. Metal film resistor, type 0257. 0.6 watt with 1% tolerance and T_K = ±50ppm/°C.

crystal oscillator,LFXT1

PARAMETER		TEST CONDITIONS	V_{CC}	MIN	TYP	MAX	UNIT
C_{XIN}	Pin load capacitance	XTS=0; LF mode selected	2.2 V / 3 V		12		pF
		XTS=1; XT1 mode selected (see Note 1)	2.2 V / 3 V		2		
C_{XOUT}	Pin load capacitance	XTS=0; LF mode selected	2.2 V / 3 V		12		pF
		XTS=1; XT1 mode selected (see Note 1)	2.2 V / 3 V		2		
V_{IL}	Input levels at XIN	see Note 2	2.2 V / 3 V	V_{SS}		$0.2 \times V_{CC}$	V
V_{IH}				$0.8 \times V_{CC}$		V_{CC}	V

NOTES: 1. Requires external capacitors at both terminals. Values are specified by crystal manufacturers.
2. Applies only when using an external logic-level clock source. Not applicable when using a crystal or resonator.

electrical characteristics over recommended operating free-air temperature (unless otherwise noted) (continued)

10-bit ADC, power supply and input range conditions (see Note 1)

PARAMETER		TEST CONDITIONS		MIN	NOM	MAX	UNIT
V_{CC}	Analog supply voltage	V_{SS} = 0 V		2.2		3.6	V
$V_{(P6.x/Ax)}$	Analog input voltage range (see Note 2)	All Ax terminals. Analog inputs selected in ADC10AE register and PxSel.x=1 $V_{SS} \le V_{Px.x/Ax} \le V_{CC}$		0		V_{CC}	V
I_{ADC10}	Operating supply current into V_{CC} terminal (see Note 3)	$f_{ADC10CLK}$ = 5.0 MHz ADC10ON = 1, REFON = 0 ADC10SHT0=1, ADC10SHT1=0, ADC10DIV=0	V_{CC} = 2.2 V		0.52	1.05	mA
			V_{CC} = 3 V		0.6	1.2	
I_{REF+}	Reference operating supply current, reference buffer disabled (see Note 4)	$f_{ADC10CLK}$ = 5.0 MHz ADC10ON = 0, REFON = 1, REF2_5V = x; REFOUT = 0	V_{CC} = 2.2V/3 V		0.25	0.4	mA
I_{REFB}	Reference buffer operating supply current (see Note 4)	$f_{ADC10CLK}$ = 5.0 MHz ADC10ON = 0, REFON = 1, REF2_5V = 0 REFOUT = 1	ADC10SR = 0		1.1	1.4	mA
			ADC10SR = 1		0.46	0.55	
C_I †	Input capacitance	Only one terminal can be selected at one time, Px.x/Ax	V_{CC} = 2.2 V			27	pF
R_I†	Input MUX ON resistance	$0V \le V_{Ax} \le V_{CC}$	V_{CC} = 3 V			2000	Ω

† Not production tested, limits verified by design

NOTES:
1. The leakage current is defined in the leakage current table with Px.x/Ax parameter.
2. The analog input voltage range must be within the selected reference voltage range V_{R+} to V_{R-} for valid conversion results.
3. The internal reference supply current is not included in current consumption parameter I_{ADC10}.
4. The internal reference current is supplied via terminal V_{CC}. Consumption is independent of the ADC10ON control bit, unless a conversion is active. The REFON bit enables the built-in reference to settle before starting an A/D conversion.

10-bit ADC, external reference (see Note 1)

PARAMETER		TEST CONDITIONS	V_{CC}	MIN	NOM	MAX	UNIT
V_{eREF+}	Positive external reference voltage input	$V_{eREF+} > V_{REF-}/V_{eREF-}$ (see Note 2)		1.4		V_{CC}	V
V_{REF-}/V_{eREF-}	Negative external reference voltage input	$V_{eREF+} > V_{REF-}/V_{eREF-}$ (see Note 3)		0		1.2	V
($V_{eREF+} - V_{REF-}/V_{eREF-}$)	Differential external reference voltage input	$V_{eREF+} > V_{REF-}/V_{eREF-}$ (see Note 4)		1.4		V_{CC}	V
I_{VeREF+}	Static input current	$0V \le V_{eREF+} \le V_{CC}$	2.2 V/3 V			±1	µA
$I_{VREF-/VeREF-}$	Static input current	$0V \le V_{eREF-} \le V_{CC}$	2.2 V/3 V			±1	µA

NOTES:
1. The external reference is used during conversion to charge and discharge the capacitance array. The input capacitance, C_I, is also the dynamic load for an external reference during conversion. The dynamic impedance of the reference supply should follow the recommendations on analog-source impedance to allow the charge to settle for 10-bit accuracy.
2. The accuracy limits the minimum positive external reference voltage. Lower reference voltage levels may be applied with reduced accuracy requirements.
3. The accuracy limits the maximum negative external reference voltage. Higher reference voltage levels may be applied with reduced accuracy requirements.
4. The accuracy limits minimum external differential reference voltage. Lower differential reference voltage levels may be applied with reduced accuracy requirements.

electrical characteristics over recommended operating free-air temperature (unless otherwise noted) (continued)

10-bit ADC, built-in reference

PARAMETER		TEST CONDITIONS		MIN	NOM	MAX	UNIT
V_{REF+}	Positive built-in reference voltage output	REF2_5V = 1 for 2.5 V $I_{VREF+} \leq I_{VREF+}$max	V_{CC} = 3 V	2.35	2.5	2.65	V
		REF2_5V = 0 for 1.5 V $I_{VREF+} \leq I_{VREF+}$max	V_{CC} = 2.2 V/3 V	1.41	1.5	1.59	
$V_{CC(min)}$	V_{CC} minimum voltage, Positive built-in reference active	REF2_5V = 0, $I_{VREF+} \leq$ 1mA		2.2			V
		REF2_5V = 1, $I_{VREF+} \leq$ 0.5mA		V_{REF+} + 0.15			
		REF2_5V = 1, $I_{VREF+} \leq$ 1mA		V_{REF+} + 0.15			
I_{VREF+}	Load current out of V_{REF+} terminal		V_{CC} = 2.2 V			±0.5	mA
			V_{CC} = 3 V			±1	
$I_{L(VREF)+}$ †	Load-current regulation V_{REF+} terminal	I_{VREF+} = 500 µA +/− 100 µA Analog input voltage ~0.75 V; REF2_5V = 0	V_{CC} = 2.2 V			±2	LSB
			V_{CC} = 3 V			±2	
		I_{VREF+} = 500 µA ± 100 µA Analog input voltage ~1.25 V; REF2_5V = 1	V_{CC} = 3 V			±2	LSB
$t_{DL(VREF)+}$ ‡	Load current regulation V_{REF+} terminal	I_{VREF+} =100 µA → 900 µA, V_{CC}=3 V, Ax ~0.5 x V_{REF+} Error of conversion result ≤ 1 LSB	ADC10SR = 0			400	ns
			ADC10SR = 1			2000	
C_{VREF+}	Capacitance at pin V_{REF+} (see Note 1)	REFON =1, $I_{VREF+} \leq$ ±1 mA	V_{CC} = 2.2 V/3 V			100	pF
T_{REF+}†	Temperature coefficient of built-in reference	I_{VREF+} is a constant in the range of 0 mA ≤ I_{VREF+} ≤ 1 mA	V_{CC} = 2.2 V/3 V			±100	ppm/°C
t_{REFON}†	Settle time of internal reference voltage and V_{REF+} (see Note 2)	I_{VREF+} = 0.5 mA,V_{REF+} = 1.5 V, V_{CC} = 3.6 V, REFON = 0 → 1				30	µs
		I_{VREF+} = 0.5 mA, V_{REF+} = 1.5 V, V_{CC} = 2.2 V, REFON = 1	ADC10SR = 0			0.8	
			ADC10SR = 1			2.5	

† Not production tested, limits characterized
‡ Not production tested, limits verified by design

NOTES: 1. The capacitance applied to the internal buffer operational amplifier, if switched to terminal P2.4/TA2/A4/V_{REF+}/V_{eREF+} (REFOUT=1), must be limited; the reference buffer may become unstable otherwise.
2. The condition is that the error in a conversion started after t_{REFON} is less than ±0.5 LSB.

electrical characteristics over recommended operating free-air temperature (unless otherwise noted) (continued)

10-bit ADC, timing parameters

PARAMETER		TEST CONDITIONS		MIN	NOM	MAX	UNIT
$f_{ADC10CLK}$		For specified performance of ADC10 linearity parameters	ADC10SR = 0	0.450		6.3	MHz
			ADC10SR = 1	0.450		1.5	
$f_{ADC10OSC}$		ADC10DIV=0, $f_{ADC10CLK}$=$f_{ADC10OSC}$	V_{CC} = 2.2 V/ 3V	3.7		6.3	MHz
$t_{CONVERT}$	Conversion time	Internal oscillator, $f_{ADC10OSC}$ = 3.7 MHz to 6.3 MHz	V_{CC} = 2.2 V/ 3 V	2.06		3.51	µs
		External $f_{ADC10CLK}$ from ACLK, MCLK or SMCLK: ADC10SSEL ≠ 0			13×ADC10DIV× 1/$f_{ADC10CLK}$		µs
$t_{ADC10ON}$‡	Turn on settling time of the ADC	(see Note 1)				100	ns
t_{Sample}‡	Sampling time	R_S = 400 Ω, R_I = 2000 Ω, C_I = 20 pF (see Note 2)	V_{CC} = 3 V	1400			ns
			V_{CC} = 2.2 V	1400			

† Not production tested, limits characterized
‡ Not production tested, limits verified by design

NOTES: 1. The condition is that the error in a conversion started after $t_{ADC10ON}$ is less than ±0.5 LSB. The reference and input signal are already settled.
2. Approximately eight Tau (τ) are needed to get an error of less than ±0.5 LSB.
$t_{Sample} = \ln(2^{n+1}) \times (R_S + R_I) \times C_I + 800$ ns. (ADC10SR = 0, n = ADC resolution = 10, R_S = external source resistance)
$t_{Sample} = \ln(2^{n+1}) \times (R_S + R_I) \times C_I + 2.5$ µs. (ADC10SR = 1, n = ADC resolution = 10, R_S = external source resistance)

10-bit ADC, linearity parameters

PARAMETER		TEST CONDITIONS	V_{CC}	MIN	NOM	MAX	UNIT
E_I	Integral linearity error	1.4 V ≤ (V_{eREF+} − V_{REF-}/V_{eREF-}) min ≤ 1.6 V	2.2 V/3 V			±1	LSB
		1.6 V < (V_{eREF+} − V_{REF-}/V_{eREF-}) min ≤ [V_{CC}]				±1	
E_D	Differential linearity error	(V_{eREF+} − V_{REF-}/V_{eREF-})$_{min}$ ≤ (V_{eREF+} − V_{REF-}/V_{eREF-})	2.2 V/3 V			±1	LSB
E_O	Offset error	(V_{eREF+} − V_{REF-}/V_{eREF-})$_{min}$ ≤ (V_{eREF+} − V_{REF-}/V_{eREF-}), Internal impedance of source R_S < 100 Ω,	2.2 V/3 V		±2	±4	LSB
E_G	Gain error	(V_{eREF+} − V_{REF-}/V_{eREF-})$_{min}$ ≤ (V_{eREF+} − V_{REF-}/V_{eREF-}),	2.2 V/3 V		±1.1	±2	LSB
E_T	Total unadjusted error	(V_{eREF+} − V_{REF-}/V_{eREF-})$_{min}$ ≤ (V_{eREF+} − V_{REF-}/V_{eREF-}),	2.2 V/3 V		±2	±5	LSB

electrical characteristics over recommended operating free-air temperature (unless otherwise noted) (continued)

10-bit ADC, temperature sensor and built-in V_{MID}

PARAMETER		TEST CONDITIONS	V_{CC}	MIN	NOM	MAX	UNIT
I_{SENSOR}	Operating supply current into V_{CC} terminal (see Note 1)	REFON = 0, INCH = 0Ah, ADC10ON=NA, T_A = 25°C	2.2 V		40	120	µA
			3 V		60	160	
V_{SENSOR}†		ADC10ON = 1, INCH = 0Ah, T_A = 0°C	2.2 V		986	986±5%	mV
			3 V		986	986±5%	
TC_{SENSOR}†		ADC10ON = 1, INCH = 0Ah	2.2 V		3.55	3.55±3%	mV/°C
			3 V		3.55	3.55±3%	
$t_{SENSOR(sample)}$†	Sample time required if channel 10 is selected (see Note 2)	ADC10ON = 1, INCH = 0Ah, Error of conversion result ≤ 1 LSB	2.2 V	30			µs
			3 V	30			
I_{VMID}	Current into divider at channel 11 (see Note 3)	ADC10ON = 1, INCH = 0Bh,	2.2 V			NA	µA
			3 V			NA	
V_{MID}	V_{CC} divider at channel 11	ADC10ON = 1, INCH = 0Bh, V_{MID} is ~0.5 x V_{CC}	2.2 V		1.1	1.1±0.04	V
			3 V		1.5	1.50±0.04	
$t_{VMID(sample)}$	Sample time required if channel 11 is selected (see Note 4)	ADC10ON = 1, INCH = 0Bh, Error of conversion result ≤ 1 LSB	2.2 V	1400			ns
			3 V	1220			

† Not production tested, limits characterized

NOTES:
1. The sensor current I_{SENSOR} is consumed if (ADC10ON = 1 and REFON = 1), or (ADC10ON=1 and INCH=0Ah and sample signal is high). When REFON = 1, ISENSOR is included in IREF+. When REFON = 0, ISENSOR applies during conversion of the temperature sensor input (INCH = 0Ah).
2. The typical equivalent impedance of the sensor is 51 kΩ. The sample time required includes the sensor-on time $t_{SENSOR(on)}$.
3. No additional current is needed. The V_{MID} is used during sampling.
4. The on-time $t_{VMID(on)}$ is included in the sampling time $t_{VMID(sample)}$; no additional on time is needed.

electrical characteristics over recommended operating free-air temperature (unless otherwise noted) (continued)

Flash Memory

PARAMETER		TEST CONDITIONS	V_{CC}	MIN	NOM	MAX	UNIT
$V_{CC(PGM/ERASE)}$	Program and Erase supply voltage			2.7		3.6	V
f_{FTG}	Flash Timing Generator frequency			257		476	kHz
I_{PGM}	Supply current from V_{CC} during program		2.7 V/ 3.6 V		3	5	mA
I_{ERASE}	Supply current from V_{CC} during erase		2.7 V/ 3.6 V		3	7	mA
t_{CPT}	Cumulative program time	see Note 1	2.7 V/ 3.6 V			4	ms
$t_{CMErase}$	Cumulative mass erase time	see Note 2	2.7 V/ 3.6 V	200			ms
	Program/Erase endurance			10^4	10^5		cycles
$t_{Retention}$	Data retention duration	T_J = 25°C		100			years
t_{Word}	Word or byte program time	see Note 3			35		t_{FTG}
$t_{Block, 0}$	Block program time for 1st byte or word				30		
$t_{Block, 1-63}$	Block program time for each additional byte or word				21		
$t_{Block, End}$	Block program end-sequence wait time				6		
$t_{Mass\ Erase}$	Mass erase time				5297		
$t_{Seg\ Erase}$	Segment erase time				4819		

NOTES: 1. The cumulative program time must not be exceeded when writing to a 64-byte flash block. This parameter applies to all programming methods: individual word/byte write and block write modes.
2. The mass erase duration generated by the flash timing generator is at least 11.1ms (= 5297x1/f_{FTG},max = 5297x1/476kHz). To achieve the required cumulative mass erase time the Flash Controller's mass erase operation can be repeated until this time is met. (A worst case minimum of 19 cycles are required).
3. These values are hardwired into the Flash Controller's state machine; t_{FTG} = 1/f_{FTG}.

JTAG Interface

PARAMETER		TEST CONDITIONS	V_{CC}	MIN	NOM	MAX	UNIT
f_{TCK}	TCK input frequency	see Note 1	2.2 V	0		5	MHz
			3 V	0		10	MHz
$R_{Internal}$	Internal pull-down resistance on TEST	see Note 2	2.2 V/ 3 V	25	60	90	kΩ

NOTES: 1. f_{TCK} may be restricted to meet the timing requirements of the module selected.
2. TEST pull-down resistor implemented in all Flash versions.

JTAG Fuse (see Note 1)

PARAMETER		TEST CONDITIONS	V_{CC}	MIN	NOM	MAX	UNIT
$V_{CC(FB)}$	Supply voltage during fuse-blow condition	T_A = 25°C		2.5			V
V_{FB}	Voltage level on TEST for fuse-blow			6		7	V
I_{FB}	Supply current into TEST during fuse blow					100	mA
t_{FB}	Time to blow fuse					1	ms

NOTES: 1. Once the fuse is blown, no further access to the MSP430 JTAG/Test and emulation features is possible. The JTAG block is switched to bypass mode.

APPLICATION INFORMATION

input/output schematic

Port P1, P1.0 to P1.3, input/output with Schmitt-trigger

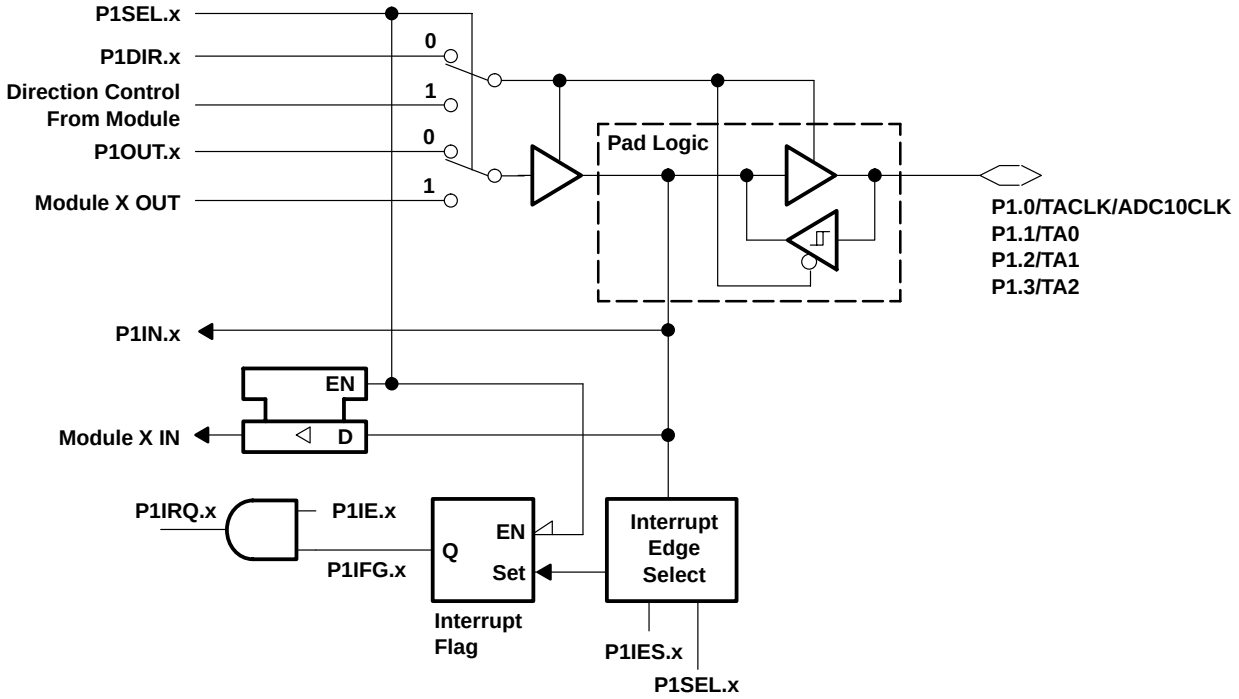

NOTE: x = Bit/identifier, 0 to 3 for port P1

PnSel.x	PnDIR.x	DIRECTION CONTROL FROM MODULE	PnOUT.x	MODULE X OUT	PnIN.x	MODULE X IN	PnIE.x	PnIFG.x	PnIES.x
P1Sel.0	P1DIR.0	P1DIR.0	P1OUT.0	ADC10CLK	P1IN.0	TACLK†	P1IE.0	P1IFG.0	P1IES.0
P1Sel.1	P1DIR.1	P1DIR.1	P1OUT.1	Out0 signal†	P1IN.1	CCI0A†	P1IE.1	P1IFG.1	P1IES.1
P1Sel.2	P1DIR.2	P1DIR.2	P1OUT.2	Out1 signal†	P1IN.2	CCI1A†	P1IE.2	P1IFG.2	P1IES.2
P1Sel.3	P1DIR.3	P1DIR.3	P1OUT.3	Out2 signal†	P1IN.3	CCI2A†	P1IE.3	P1IFG.3	P1IES.3

† Signal from or to Timer_A

APPLICATION INFORMATION

input/output schematic (continued)

Port P1, P1.4 to P1.7, input/output with Schmitt-trigger and in-system access features

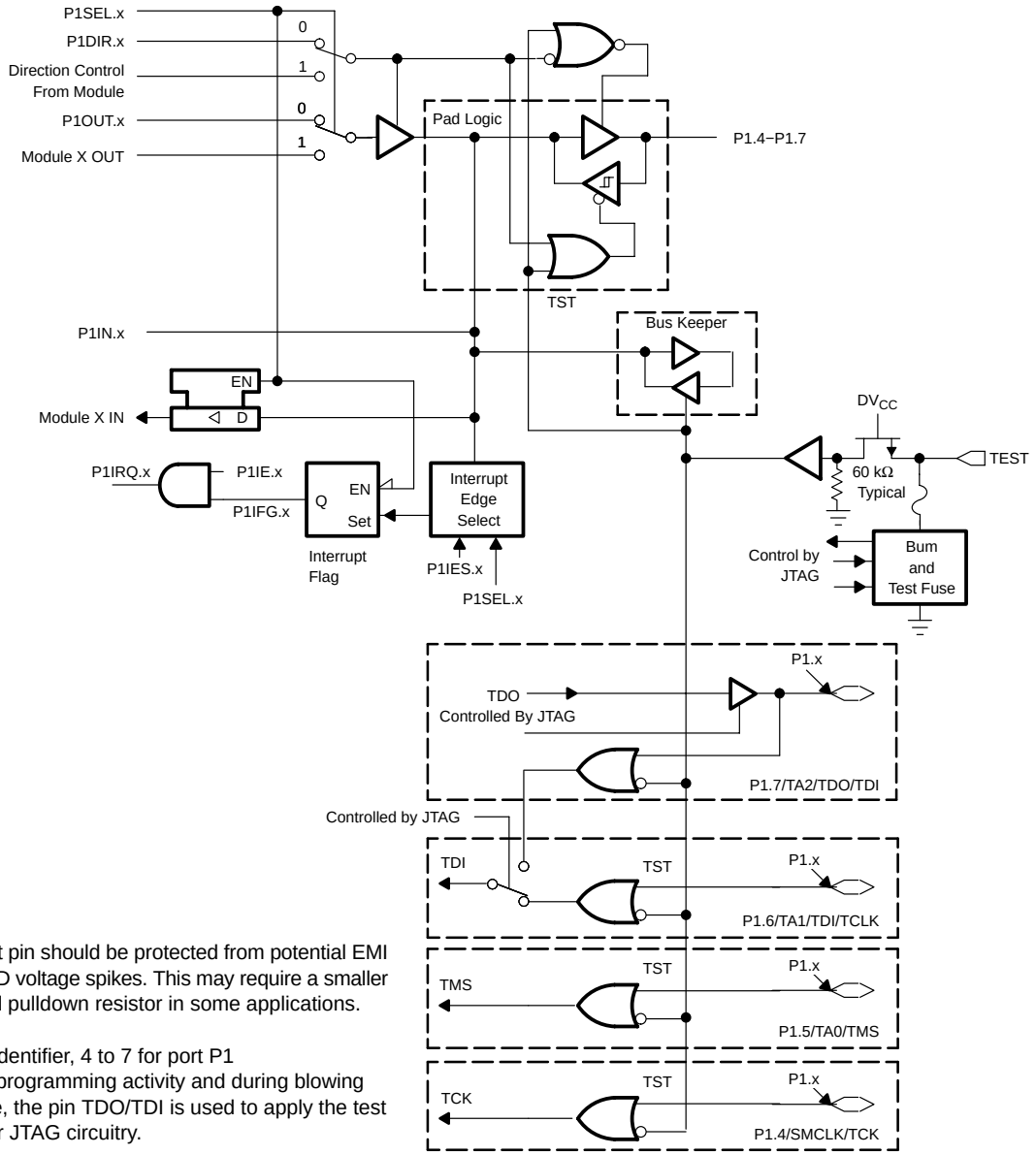

NOTE: The test pin should be protected from potential EMI and ESD voltage spikes. This may require a smaller external pulldown resistor in some applications.

x = Bit identifier, 4 to 7 for port P1
During programming activity and during blowing the fuse, the pin TDO/TDI is used to apply the test input for JTAG circuitry.

PnSel.x	PnDIR.x	DIRECTION CONTROL FROM MODULE	PnOUT.x	MODULE X OUT	PnIN.x	MODULE X IN	PnIE.x	PnIFG.x	PnIES.x
P1Sel.4	P1DIR.4	P1DIR.4	P1OUT.4	SMCLK	P1IN.4	unused	P1IE.4	P1IFG.4	P1IES.4
P1Sel.5	P1DIR.5	P1DIR.5	P1OUT.5	Out0 signal†	P1IN.5	unused	P1IE.5	P1IFG.5	P1IES.5
P1Sel.6	P1DIR.6	P1DIR.6	P1OUT.6	Out1 signal†	P1IN.6	unused	P1IE.6	P1IFG.6	P1IES.6
P1Sel.7	P1DIR.7	P1DIR.7	P1OUT.7	Out2 signal†	P1IN.7	unused	P1IE.7	P1IFG.7	P1IES.7

† Signal from or to Timer_A

APPLICATION INFORMATION

input/output schematic (continued)

Port P2, P2.0 to P2.2, input/output with Schmitt-trigger

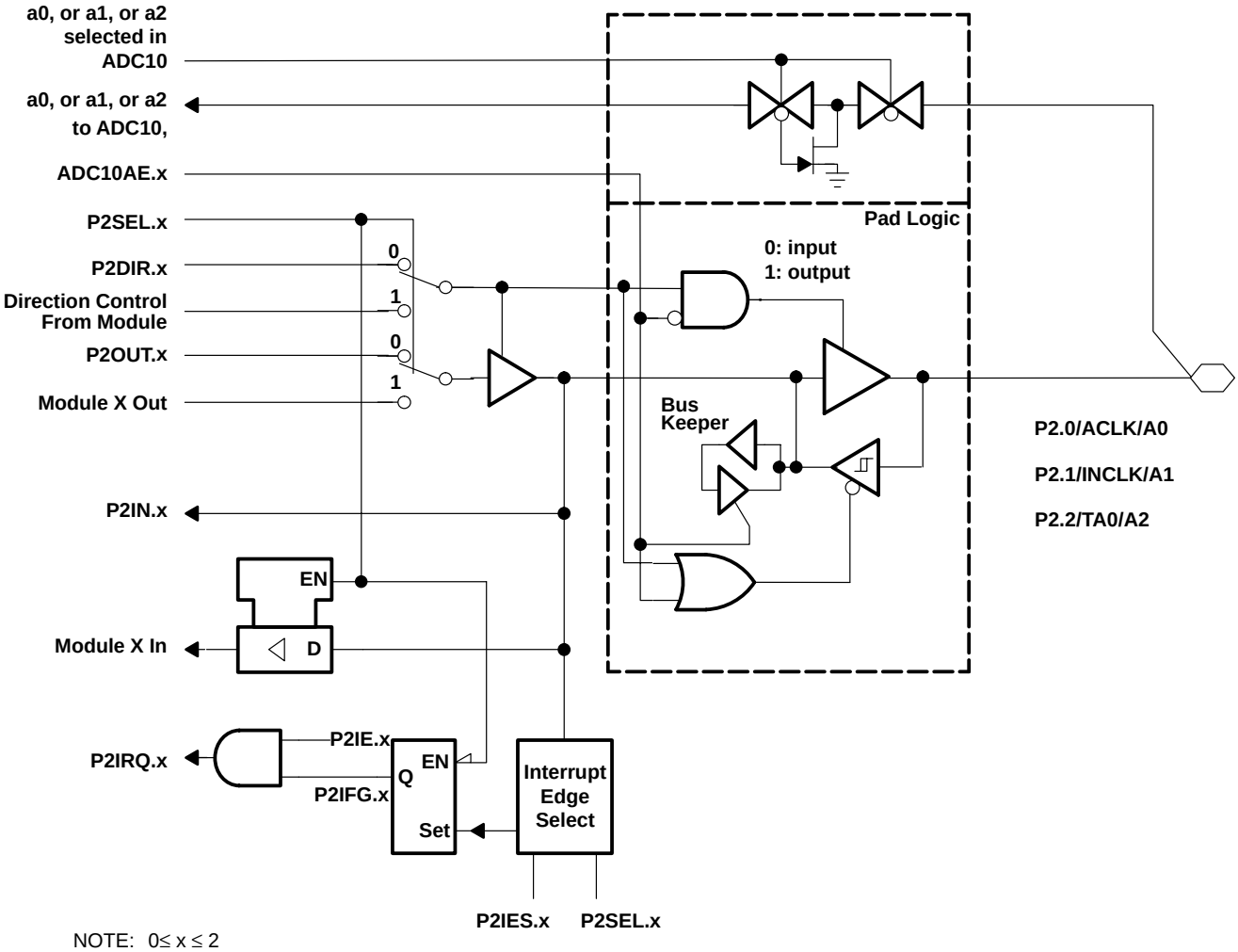

NOTE: 0≤ x ≤ 2

PnSel.x	PnDIR.x	DIRECTION CONTROL FROM MODULE	PnOUT.x	MODULE X OUT	PnIN.x	MODULE X IN	PnIE.x	PnIFG.x	PnIES.x
P2Sel.0	P2DIR.0	P2DIR.0	P2OUT.0	ACLK†	P2IN.0	unused	P2IE.0	P2IFG.0	P1IES.0
P2Sel.1	P2DIR.1	P2DIR.1	P2OUT.1	V_{SS}	P2IN.1	INCLK†	P2IE.1	P2IFG.1	P1IES.1
P2Sel.2	P2DIR.2	P2DIR.2	P2OUT.2	OUT0 signal†	P2IN.2	CCI0B†	P2IE.2	P2IFG.2	P1IES.2

† Timer_A

APPLICATION INFORMATION

input/output schematic (continued)

Port P2, P2.3 to P2.4, input/output with Schmitt-trigger

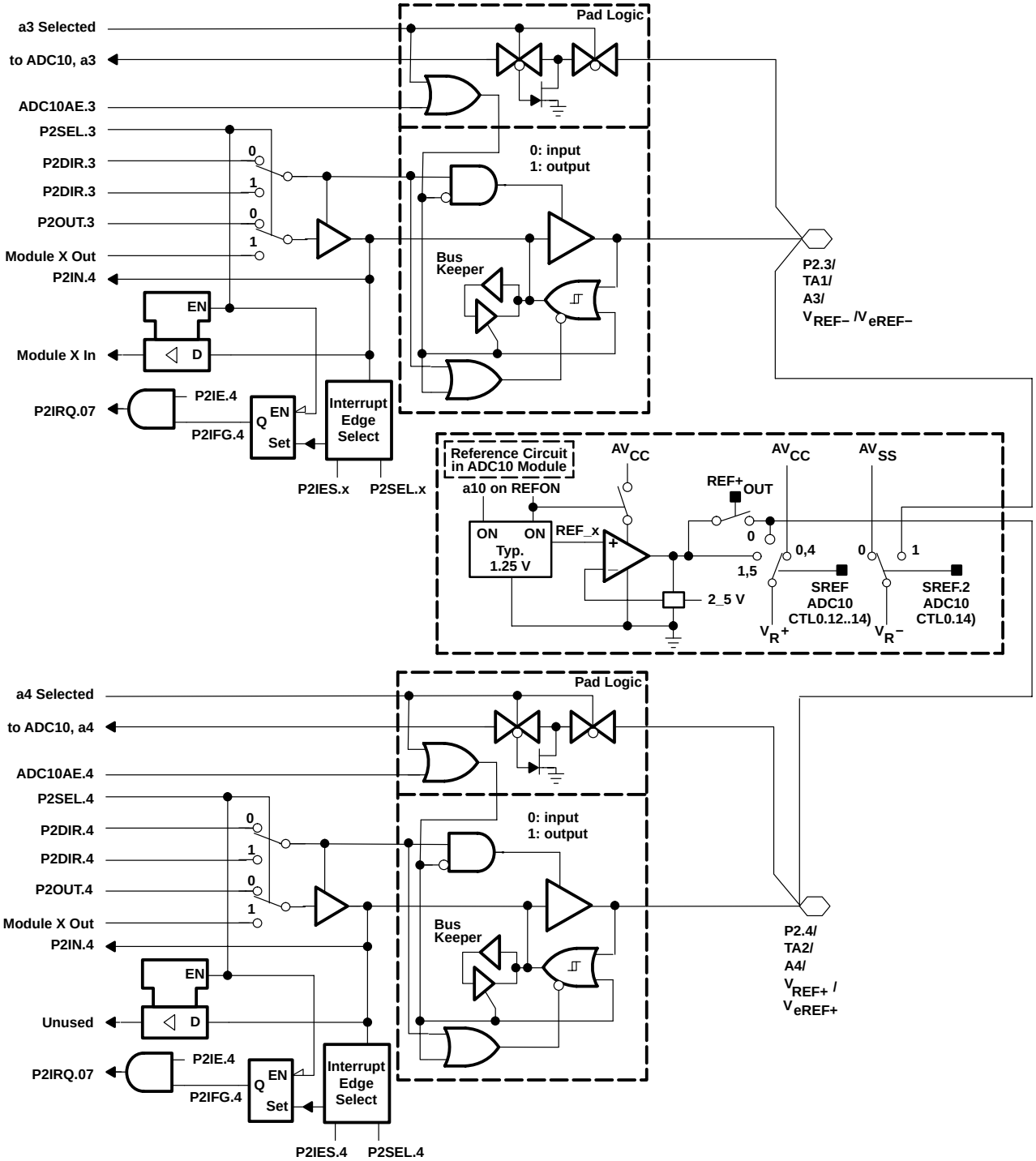

APPLICATION INFORMATION

Port P2, P2.3 to P2.4, input/output with Schmitt-trigger (continued)

PnSel.x	PnDIR.x	DIRECTION CONTROL FROM MODULE	PnOUT.x	MODULE X OUT	PnIN.x	MODULE X IN	PnIE.x	PnIFG.x	PnIES.x
P2Sel.3	P2DIR.3	P2DIR.3	P2OUT.3	Out1 signal†	P2IN.3	CCI1B†	P2IE.3	P2IFG.3	P1IES.3
P2Sel.4	P2DIR.4	P2DIR.4	P2OUT.4	Out2 signal†	P2IN.4	Unused	P2IE.4	P2IFG.4	P1IES.4

† Timer_A

input/output schematic (continued)

Port P2, P2.5, input/output with Schmitt-trigger and R_{OSC} function for the Basic Clock Module

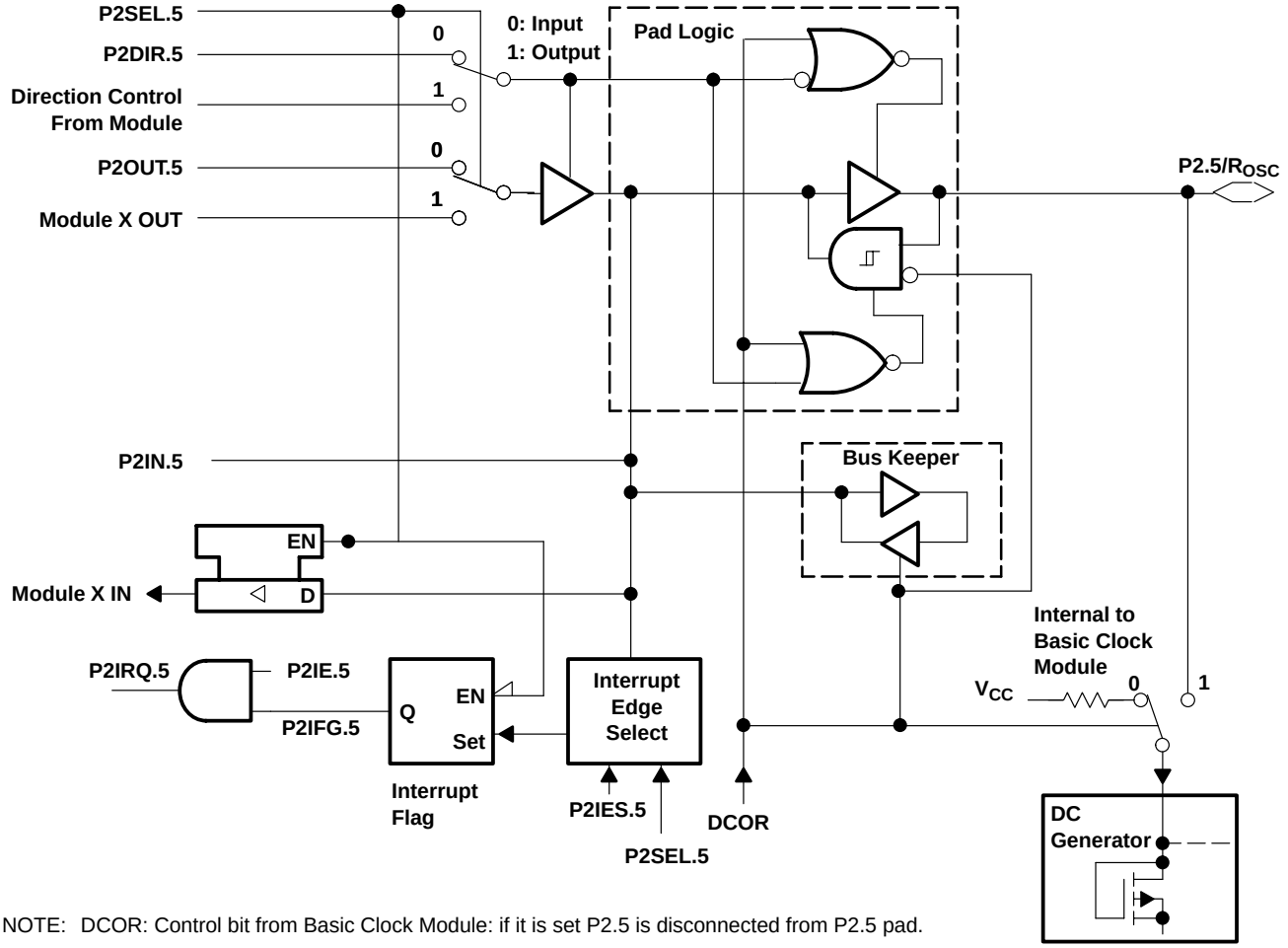

NOTE: DCOR: Control bit from Basic Clock Module: if it is set P2.5 is disconnected from P2.5 pad.

PnSel.x	PnDIR.x	DIRECTION CONTROL FROM MODULE	PnOUT.x	MODULE X OUT	PnIN.x	MODULE X IN	PnIE.x	PnIFG.x	PnIES.x
P2Sel.5	P2DIR.5	P2DIR.5	P2OUT.5	V_{SS}	P2IN.5	unused	P2IE.5	P2IFG.5	P2IES.5

APPLICATION INFORMATION

input/output schematic (continued)

Port P2, unbonded bits P2.6 and P2.7

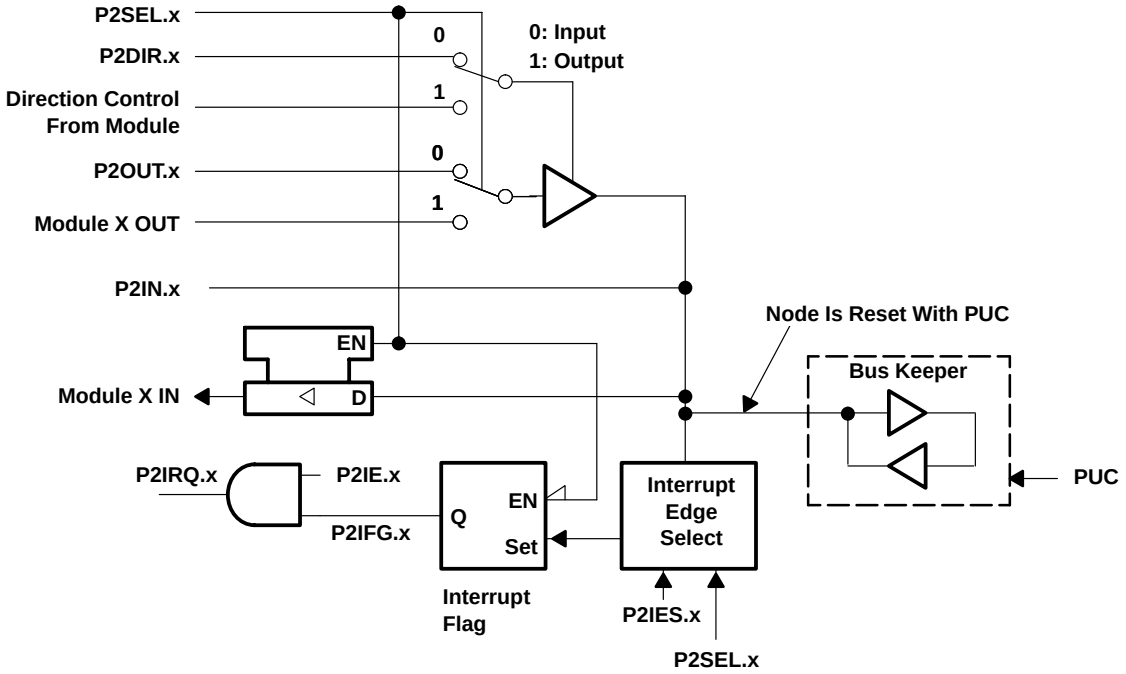

NOTE: x = Bit/identifier, 6 to 7 for port P2 without external pins

P2Sel.x	P2DIR.x	DIRECTION CONTROL FROM MODULE	P2OUT.x	MODULE X OUT	P2IN.x	MODULE X IN	P2IE.x	P2IFG.x	P2IES.x
P2Sel.6	P2DIR.6	P2DIR.6	P2OUT.6	V_{SS}	P2IN.6	unused	P2IE.6	P2IFG.6	P2IES.6
P2Sel.7	P2DIR.7	P2DIR.7	P2OUT.7	V_{SS}	P2IN.7	unused	P2IE.7	P2IFG.7	P2IES.7

NOTE: Unbonded bits 6 and 7 of port P2 can be used as interrupt flags. Only software can affect the interrupt flags. They work as software interrupts.

APPLICATION INFORMATION

input/output schematic (continued)

port P3, P3.0, P3.6 and P3.7 input/output with Schmitt-trigger

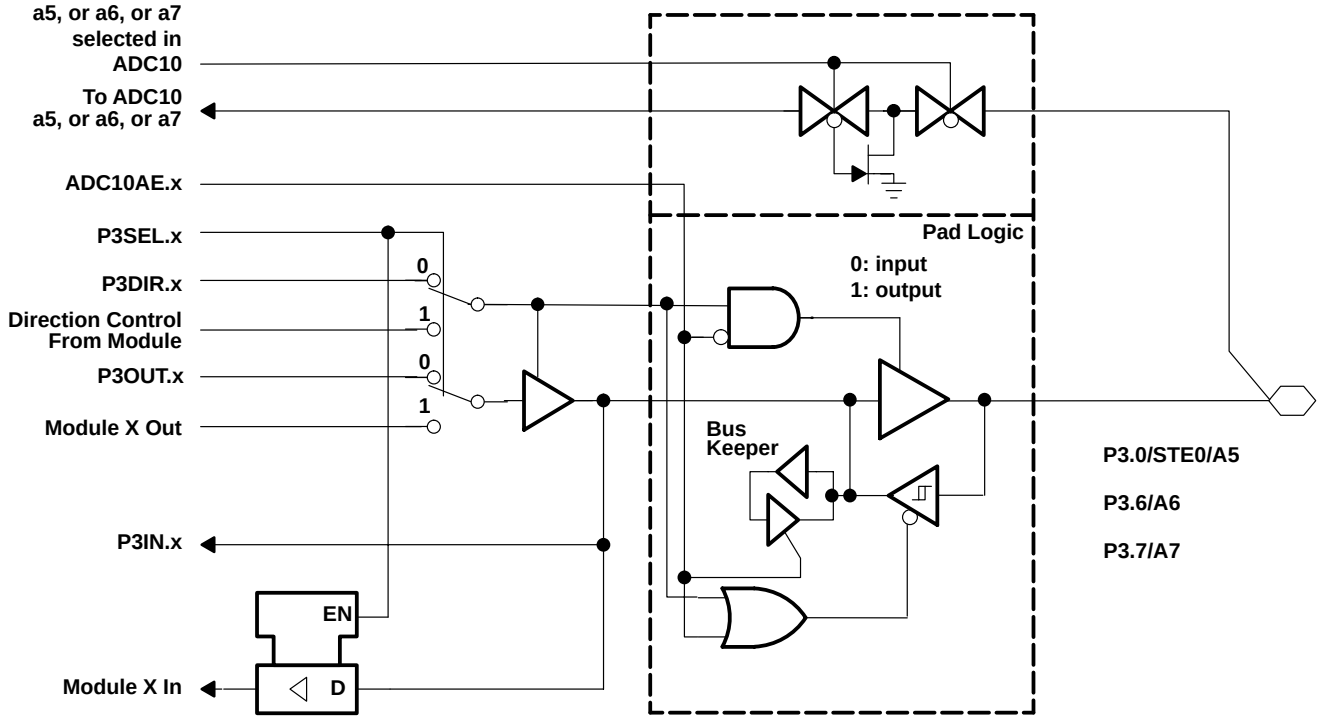

NOTE: x (0,6,7)

PnSel.x	PnDIR.x	Direction Control From Module	PnOUT.x	Module X OUT	PnIN.x	Module X IN
P3Sel.0	P3DIR.0	V_{SS}	P3OUT.0	V_{SS}	P3IN.0	STE0†
P3Sel.6	P3DIR.1	P3DIR.6	P3OUT.6	V_{SS}	P3IN.6	Unused
P3Sel.7	P3DIR.2	P3DIR.7	P3OUT.7	V_{SS}	P3IN.7	Unused

† USART0

APPLICATION INFORMATION

input/output schematic (continued)

port P3, P3.1 input/output with Schmitt-trigger

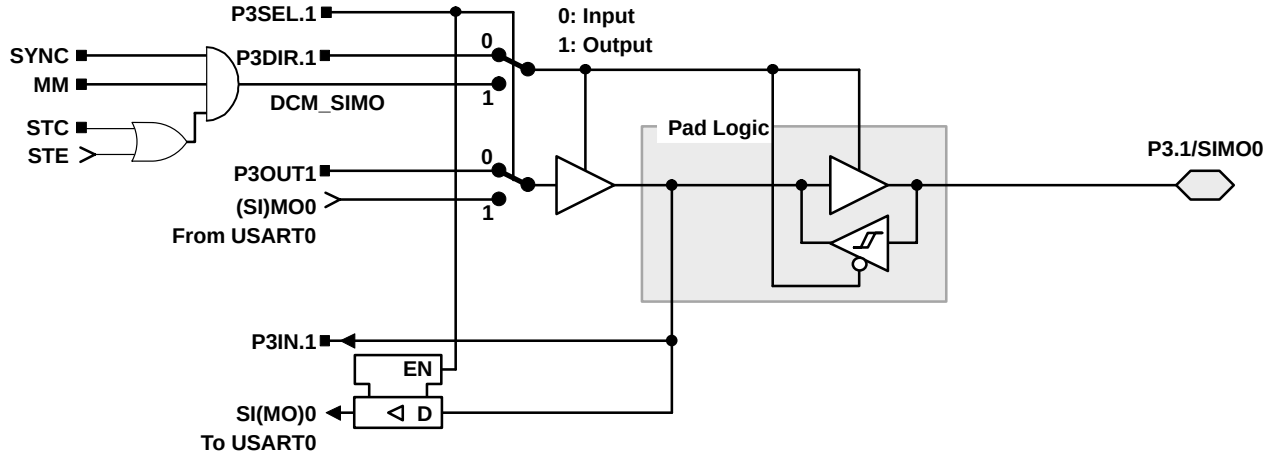

port P3, P3.2, input/output with Schmitt-trigger

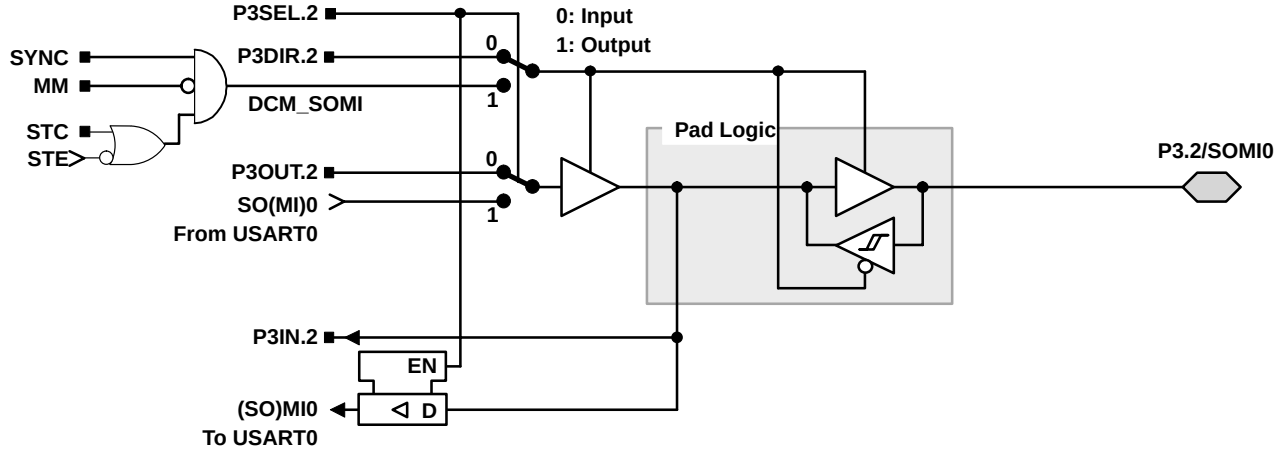

APPLICATION INFORMATION

input/output schematic (continued)

port P3, P3.3, input/output with Schmitt-trigger

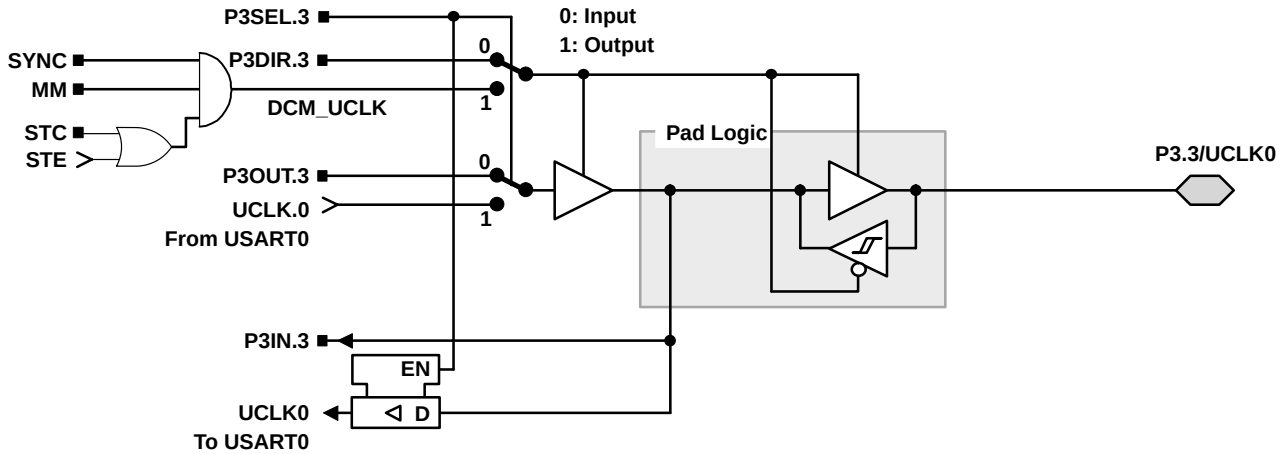

NOTE: UART mode: The UART clock can only be an input. If UART mode and UART function are selected, the P3.3/UCLK0 is always an input.
SPI, slave mode: The clock applied to UCLK0 is used to shift data in and out.
SPI, master mode: The clock to shift data in and out is supplied to connected devices on pin P3.3/UCLK0 (in slave mode).

port P3, P3.4, and P3.5 input/output with Schmitt-trigger

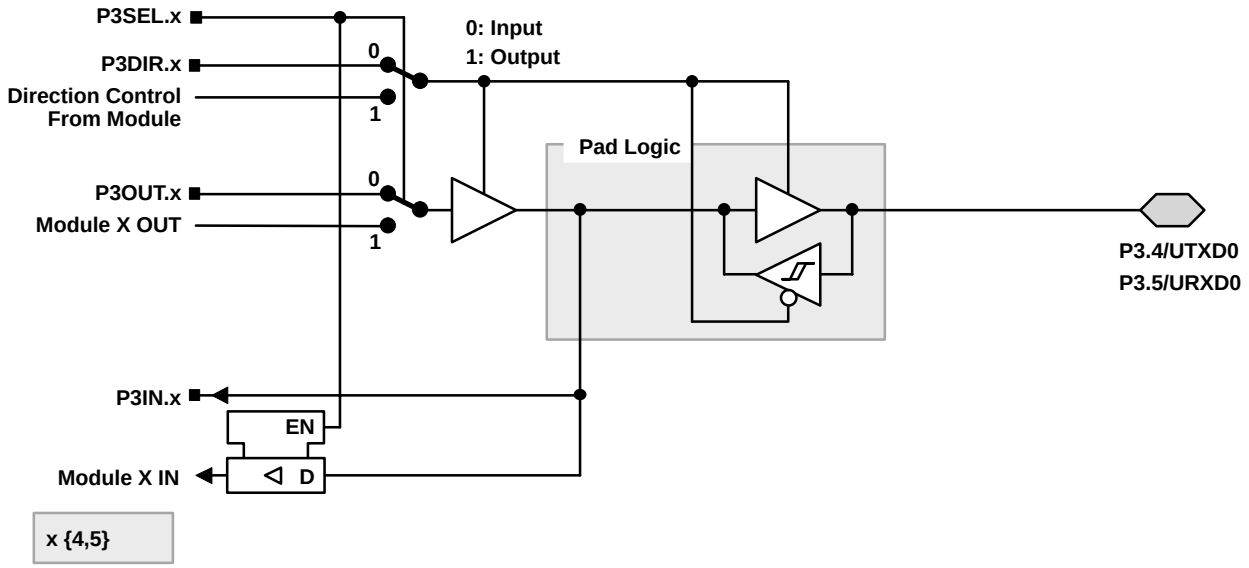

PnSel.x	PnDIR.x	DIRECTION CONTROL FROM MODULE	PnOUT.x	MODULE X OUT	PnIN.x	MODULE X IN
P3Sel.4	P3DIR.4	V_{CC}	P3OUT.4	UTXD0†	P3IN.4	Unused
P3Sel.5	P3DIR.5	V_{SS}	P3OUT.5	V_{SS}	P3IN.5	URXD0‡

† Output from USART0 module
‡ Input to USART0 module

APPLICATION INFORMATION

JTAG fuse check mode

MSP430 devices that have the fuse on the TEST terminal have a fuse check mode that tests the continuity of the fuse the first time the JTAG port is accessed after a power-on reset (POR). When activated, a fuse check current, I_{TF}, of 1 mA at 3 V, 2.5 mA at 5 V can flow from the TEST pin to ground if the fuse is not burned. Care must be taken to avoid accidentally activating the fuse check mode and increasing overall system power consumption.

When the TEST pin is taken back low after a test or programming session, the fuse check mode and sense currents are terminated.

Activation of the fuse check mode occurs with the first negative edge on the TMS pin after power up or if TMS is being held low during power up. The second positive edge on the TMS pin deactivates the fuse check mode. After deactivation, the fuse check mode remains inactive until another POR occurs. After each POR the fuse check mode has the potential to be activated.

The fuse check current will only flow when the fuse check mode is active and the TMS pin is in a low state (see Figure 10). Therefore, the additional current flow can be prevented by holding the TMS pin high (default condition).

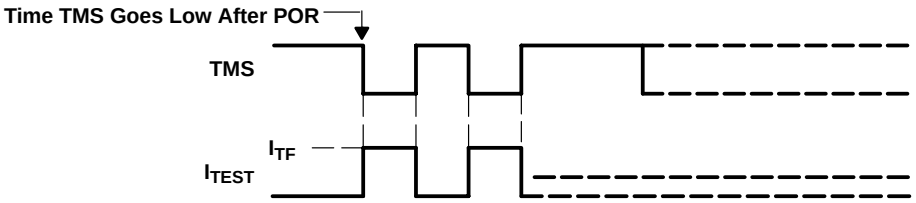

Figure 10. Fuse Check Mode Current, MSP430F11x2, MSP430F12x2

NOTE:

The CODE and RAM data protection is ensured if the JTAG fuse is blown and the 256-bit bootloader access key is used. Also, see the *bootstrap loader* section for more information.

PACKAGING INFORMATION

Orderable Device	Status (1)	Package Type	Package Drawing	Pins	Package Qty	Eco Plan (2)	Lead finish/ Ball material (6)	MSL Peak Temp (3)	Op Temp (°C)	Device Marking (4/5)	Samples
MSP430F1122IDW	ACTIVE	SOIC	DW	20	25	RoHS & Green	NIPDAU	Level-1-260C-UNLIM	-40 to 85	M430F1122	Samples
MSP430F1122IDWR	ACTIVE	SOIC	DW	20	2000	RoHS & Green	NIPDAU	Level-1-260C-UNLIM	-40 to 85	M430F1122	Samples
MSP430F1122IPW	ACTIVE	TSSOP	PW	20	70	RoHS & Green	NIPDAU	Level-1-260C-UNLIM	-40 to 85	430F1122	Samples
MSP430F1122IPWR	ACTIVE	TSSOP	PW	20	2000	RoHS & Green	NIPDAU	Level-1-260C-UNLIM	-40 to 85	430F1122	Samples
MSP430F1122IRHBT	ACTIVE	VQFN	RHB	32	250	RoHS & Green	NIPDAU	Level-2-260C-1 YEAR	-40 to 85	MSP430 F1122	Samples
MSP430F1132IDW	ACTIVE	SOIC	DW	20	25	RoHS & Green	NIPDAU	Level-1-260C-UNLIM	-40 to 85	M430F1132	Samples
MSP430F1132IDWR	ACTIVE	SOIC	DW	20	2000	RoHS & Green	NIPDAU	Level-1-260C-UNLIM	-40 to 85	M430F1132	Samples
MSP430F1132IPW	ACTIVE	TSSOP	PW	20	70	RoHS & Green	NIPDAU	Level-1-260C-UNLIM	-40 to 85	430F1132	Samples
MSP430F1132IPWR	ACTIVE	TSSOP	PW	20	2000	RoHS & Green	NIPDAU	Level-1-260C-UNLIM	-40 to 85	430F1132	Samples
MSP430F1132IRHBR	ACTIVE	VQFN	RHB	32	3000	RoHS & Green	NIPDAU	Level-2-260C-1 YEAR	-40 to 85	MSP430 F1132	Samples
MSP430F1132IRHBT	ACTIVE	VQFN	RHB	32	250	RoHS & Green	NIPDAU	Level-2-260C-1 YEAR	-40 to 85	MSP430 F1132	Samples
MSP430F1222IDW	ACTIVE	SOIC	DW	28	20	RoHS & Green	NIPDAU	Level-1-260C-UNLIM	-40 to 85	M430F1222	Samples
MSP430F1222IDWR	ACTIVE	SOIC	DW	28	1000	RoHS & Green	NIPDAU	Level-1-260C-UNLIM	-40 to 85	M430F1222	Samples
MSP430F1222IPW	ACTIVE	TSSOP	PW	28	50	RoHS & Green	NIPDAU	Level-1-260C-UNLIM	-40 to 85	M430F1222	Samples
MSP430F1222IPWR	ACTIVE	TSSOP	PW	28	2000	RoHS & Green	NIPDAU	Level-1-260C-UNLIM	-40 to 85	M430F1222	Samples
MSP430F1222IRHBR	ACTIVE	VQFN	RHB	32	3000	RoHS & Green	NIPDAU	Level-2-260C-1 YEAR	-40 to 85	MSP430 F1222	Samples
MSP430F1222IRHBT	ACTIVE	VQFN	RHB	32	250	RoHS & Green	NIPDAU	Level-2-260C-1 YEAR	-40 to 85	MSP430 F1222	Samples
MSP430F1232IDW	ACTIVE	SOIC	DW	28	20	RoHS & Green	NIPDAU	Level-1-260C-UNLIM	-40 to 85	M430F1232	Samples
MSP430F1232IDWR	ACTIVE	SOIC	DW	28	1000	RoHS & Green	NIPDAU	Level-1-260C-UNLIM	-40 to 85	M430F1232	Samples

Orderable Device	Status (1)	Package Type	Package Drawing	Pins	Package Qty	Eco Plan (2)	Lead finish/ Ball material (6)	MSL Peak Temp (3)	Op Temp (°C)	Device Marking (4/5)	Samples
MSP430F1232IPW	ACTIVE	TSSOP	PW	28	50	RoHS & Green	NIPDAU	Level-1-260C-UNLIM	-40 to 85	M430F1232	Samples
MSP430F1232IPWR	ACTIVE	TSSOP	PW	28	2000	RoHS & Green	NIPDAU	Level-1-260C-UNLIM	-40 to 85	M430F1232	Samples
MSP430F1232IRHBR	ACTIVE	VQFN	RHB	32	3000	RoHS & Green	NIPDAU	Level-2-260C-1 YEAR	-40 to 85	MSP430 F1232	Samples
MSP430F1232IRHBT	ACTIVE	VQFN	RHB	32	250	RoHS & Green	NIPDAU	Level-2-260C-1 YEAR	-40 to 85	MSP430 F1232	Samples

(1) The marketing status values are defined as follows:
ACTIVE: Product device recommended for new designs.
LIFEBUY: TI has announced that the device will be discontinued, and a lifetime-buy period is in effect.
NRND: Not recommended for new designs. Device is in production to support existing customers, but TI does not recommend using this part in a new design.
PREVIEW: Device has been announced but is not in production. Samples may or may not be available.
OBSOLETE: TI has discontinued the production of the device.

(2) **RoHS:** TI defines "RoHS" to mean semiconductor products that are compliant with the current EU RoHS requirements for all 10 RoHS substances, including the requirement that RoHS substance do not exceed 0.1% by weight in homogeneous materials. Where designed to be soldered at high temperatures, "RoHS" products are suitable for use in specified lead-free processes. TI may reference these types of products as "Pb-Free".
RoHS Exempt: TI defines "RoHS Exempt" to mean products that contain lead but are compliant with EU RoHS pursuant to a specific EU RoHS exemption.
Green: TI defines "Green" to mean the content of Chlorine (Cl) and Bromine (Br) based flame retardants meet JS709B low halogen requirements of <=1000ppm threshold. Antimony trioxide based flame retardants must also meet the <=1000ppm threshold requirement.

(3) MSL, Peak Temp. - The Moisture Sensitivity Level rating according to the JEDEC industry standard classifications, and peak solder temperature.

(4) There may be additional marking, which relates to the logo, the lot trace code information, or the environmental category on the device.

(5) Multiple Device Markings will be inside parentheses. Only one Device Marking contained in parentheses and separated by a "~" will appear on a device. If a line is indented then it is a continuation of the previous line and the two combined represent the entire Device Marking for that device.

(6) Lead finish/Ball material - Orderable Devices may have multiple material finish options. Finish options are separated by a vertical ruled line. Lead finish/Ball material values may wrap to two lines if the finish value exceeds the maximum column width.

Important Information and Disclaimer: The information provided on this page represents TI's knowledge and belief as of the date that it is provided. TI bases its knowledge and belief on information provided by third parties, and makes no representation or warranty as to the accuracy of such information. Efforts are underway to better integrate information from third parties. TI has taken and continues to take reasonable steps to provide representative and accurate information but may not have conducted destructive testing or chemical analysis on incoming materials and chemicals. TI and TI suppliers consider certain information to be proprietary, and thus CAS numbers and other limited information may not be available for release.

In no event shall TI's liability arising out of such information exceed the total purchase price of the TI part(s) at issue in this document sold by TI to Customer on an annual basis.

TAPE AND REEL INFORMATION

REEL DIMENSIONS

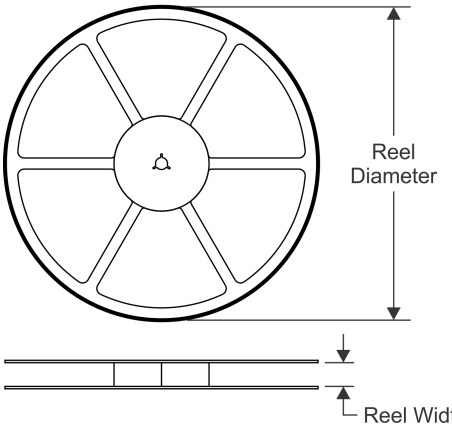

TAPE DIMENSIONS

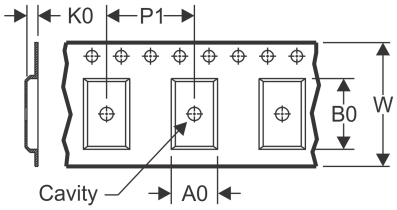

A0	Dimension designed to accommodate the component width
B0	Dimension designed to accommodate the component length
K0	Dimension designed to accommodate the component thickness
W	Overall width of the carrier tape
P1	Pitch between successive cavity centers

QUADRANT ASSIGNMENTS FOR PIN 1 ORIENTATION IN TAPE

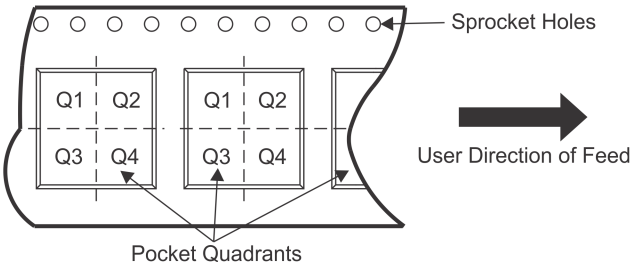

*All dimensions are nominal

Device	Package Type	Package Drawing	Pins	SPQ	Reel Diameter (mm)	Reel Width W1 (mm)	A0 (mm)	B0 (mm)	K0 (mm)	P1 (mm)	W (mm)	Pin1 Quadrant
MSP430F1122IDWR	SOIC	DW	20	2000	330.0	24.4	10.8	13.3	2.7	12.0	24.0	Q1
MSP430F1122IPWR	TSSOP	PW	20	2000	330.0	16.4	6.95	7.0	1.4	8.0	16.0	Q1
MSP430F1122IRHBT	VQFN	RHB	32	250	180.0	12.4	5.3	5.3	1.5	8.0	12.0	Q2
MSP430F1132IDWR	SOIC	DW	20	2000	330.0	24.4	10.8	13.3	2.7	12.0	24.0	Q1
MSP430F1132IPWR	TSSOP	PW	20	2000	330.0	16.4	6.95	7.0	1.4	8.0	16.0	Q1
MSP430F1132IRHBR	VQFN	RHB	32	3000	330.0	12.4	5.3	5.3	1.5	8.0	12.0	Q2
MSP430F1132IRHBT	VQFN	RHB	32	250	180.0	12.4	5.3	5.3	1.5	8.0	12.0	Q2
MSP430F1222IDWR	SOIC	DW	28	1000	330.0	32.4	11.35	18.67	3.1	16.0	32.0	Q1
MSP430F1222IPWR	TSSOP	PW	28	2000	330.0	16.4	6.9	10.2	1.8	12.0	16.0	Q1
MSP430F1222IRHBR	VQFN	RHB	32	3000	330.0	12.4	5.3	5.3	1.5	8.0	12.0	Q2
MSP430F1222IRHBT	VQFN	RHB	32	250	180.0	12.4	5.3	5.3	1.5	8.0	12.0	Q2
MSP430F1232IDWR	SOIC	DW	28	1000	330.0	32.4	11.35	18.67	3.1	16.0	32.0	Q1
MSP430F1232IPWR	TSSOP	PW	28	2000	330.0	16.4	6.9	10.2	1.8	12.0	16.0	Q1
MSP430F1232IRHBR	VQFN	RHB	32	3000	330.0	12.4	5.3	5.3	1.5	8.0	12.0	Q2
MSP430F1232IRHBT	VQFN	RHB	32	250	180.0	12.4	5.3	5.3	1.5	8.0	12.0	Q2

TAPE AND REEL BOX DIMENSIONS

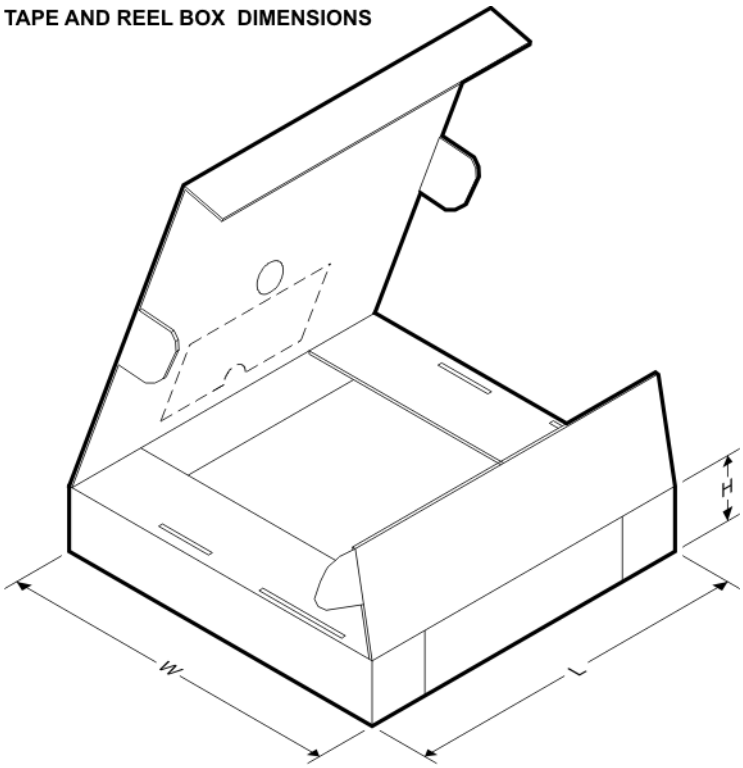

*All dimensions are nominal

Device	Package Type	Package Drawing	Pins	SPQ	Length (mm)	Width (mm)	Height (mm)
MSP430F1122IDWR	SOIC	DW	20	2000	367.0	367.0	45.0
MSP430F1122IPWR	TSSOP	PW	20	2000	853.0	449.0	35.0
MSP430F1122IRHBT	VQFN	RHB	32	250	210.0	185.0	35.0
MSP430F1132IDWR	SOIC	DW	20	2000	367.0	367.0	45.0
MSP430F1132IPWR	TSSOP	PW	20	2000	853.0	449.0	35.0
MSP430F1132IRHBR	VQFN	RHB	32	3000	853.0	449.0	35.0
MSP430F1132IRHBT	VQFN	RHB	32	250	210.0	185.0	35.0
MSP430F1222IDWR	SOIC	DW	28	1000	350.0	350.0	66.0
MSP430F1222IPWR	TSSOP	PW	28	2000	350.0	350.0	43.0
MSP430F1222IRHBR	VQFN	RHB	32	3000	853.0	449.0	35.0
MSP430F1222IRHBT	VQFN	RHB	32	250	210.0	185.0	35.0
MSP430F1232IDWR	SOIC	DW	28	1000	350.0	350.0	66.0
MSP430F1232IPWR	TSSOP	PW	28	2000	350.0	350.0	43.0
MSP430F1232IRHBR	VQFN	RHB	32	3000	853.0	449.0	35.0
MSP430F1232IRHBT	VQFN	RHB	32	250	210.0	185.0	35.0

TUBE

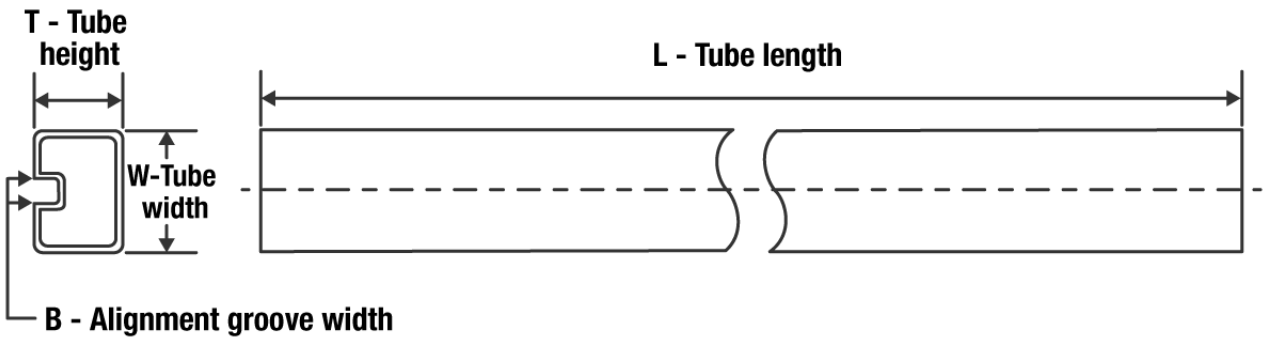

*All dimensions are nominal

Device	Package Name	Package Type	Pins	SPQ	L (mm)	W (mm)	T (µm)	B (mm)
MSP430F1122IDW	DW	SOIC	20	25	507	12.83	5080	6.6
MSP430F1122IPW	PW	TSSOP	20	70	530	10.2	3600	3.5
MSP430F1132IDW	DW	SOIC	20	25	507	12.83	5080	6.6
MSP430F1132IPW	PW	TSSOP	20	70	530	10.2	3600	3.5
MSP430F1222IDW	DW	SOIC	28	20	506.98	12.7	4826	6.6
MSP430F1222IPW	PW	TSSOP	28	50	530	10.2	3600	3.5
MSP430F1232IDW	DW	SOIC	28	20	506.98	12.7	4826	6.6
MSP430F1232IPW	PW	TSSOP	28	50	530	10.2	3600	3.5

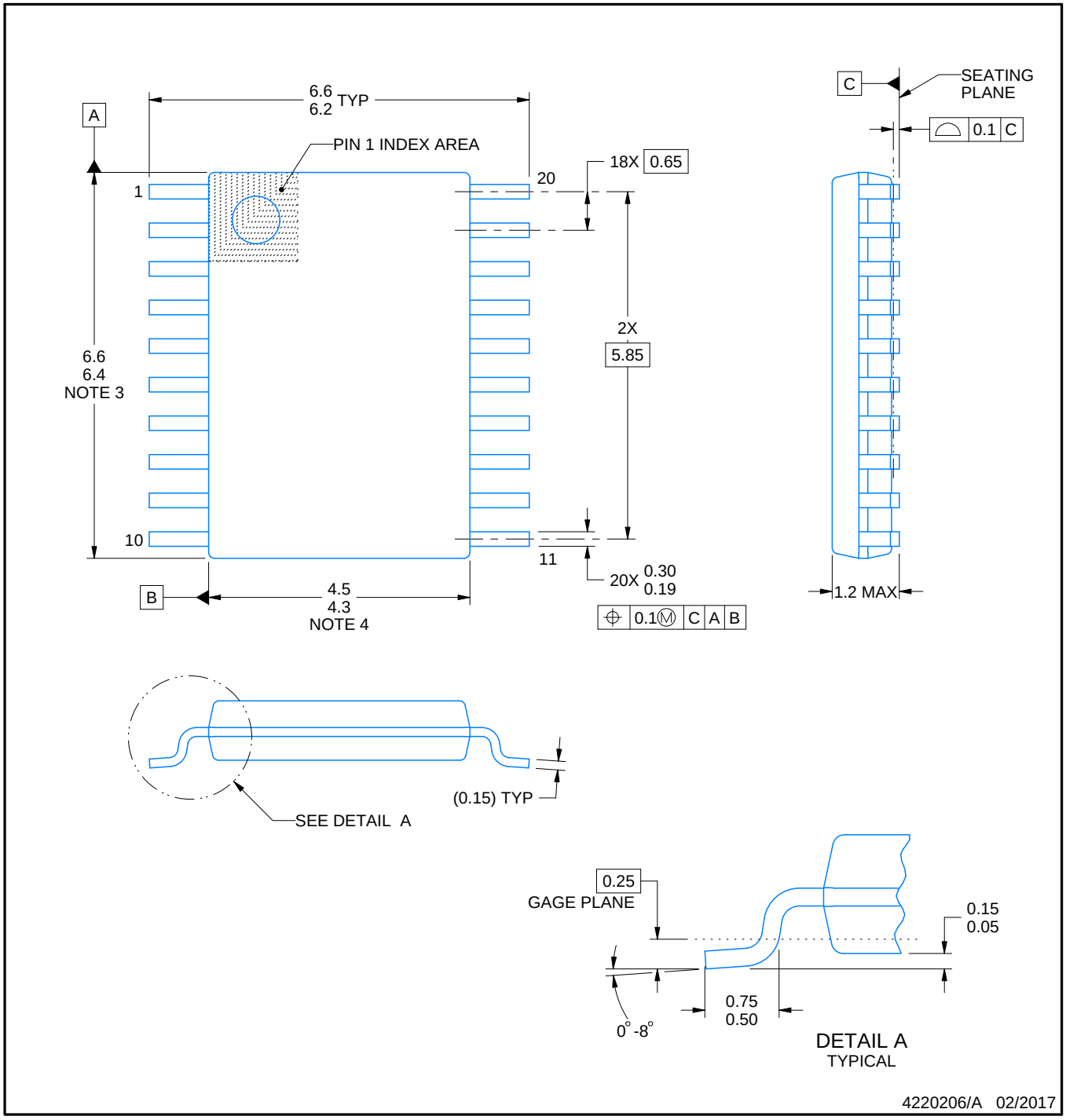

NOTES:

1. All linear dimensions are in millimeters. Any dimensions in parenthesis are for reference only. Dimensioning and tolerancing per ASME Y14.5M.
2. This drawing is subject to change without notice.
3. This dimension does not include mold flash, protrusions, or gate burrs. Mold flash, protrusions, or gate burrs shall not exceed 0.15 mm per side.
4. This dimension does not include interlead flash. Interlead flash shall not exceed 0.25 mm per side.
5. Reference JEDEC registration MO-153.

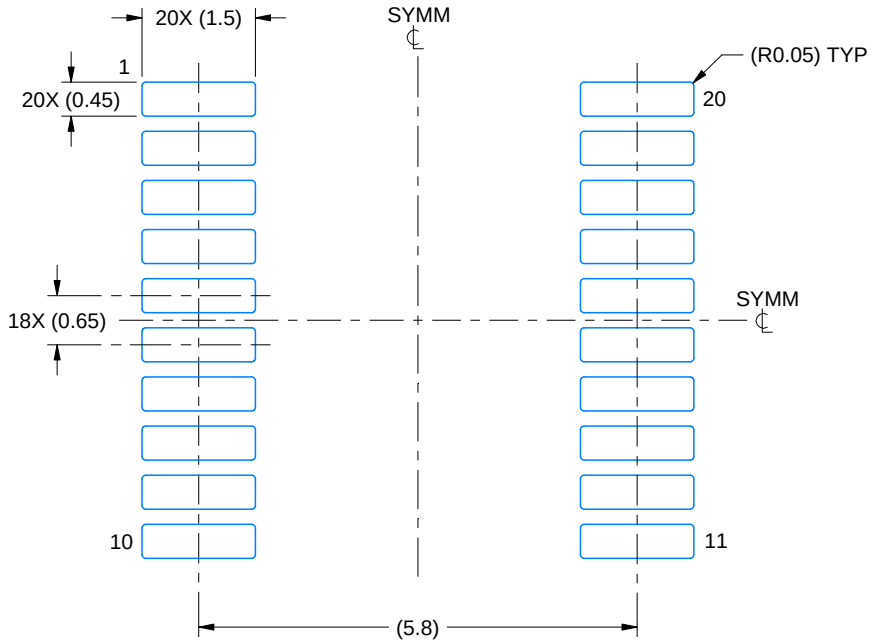

LAND PATTERN EXAMPLE
EXPOSED METAL SHOWN
SCALE: 10X

NON-SOLDER MASK DEFINED (PREFERRED)

SOLDER MASK DEFINED

SOLDER MASK DETAILS

4220206/A 02/2017

NOTES: (continued)

6. Publication IPC-7351 may have alternate designs.
7. Solder mask tolerances between and around signal pads can vary based on board fabrication site.

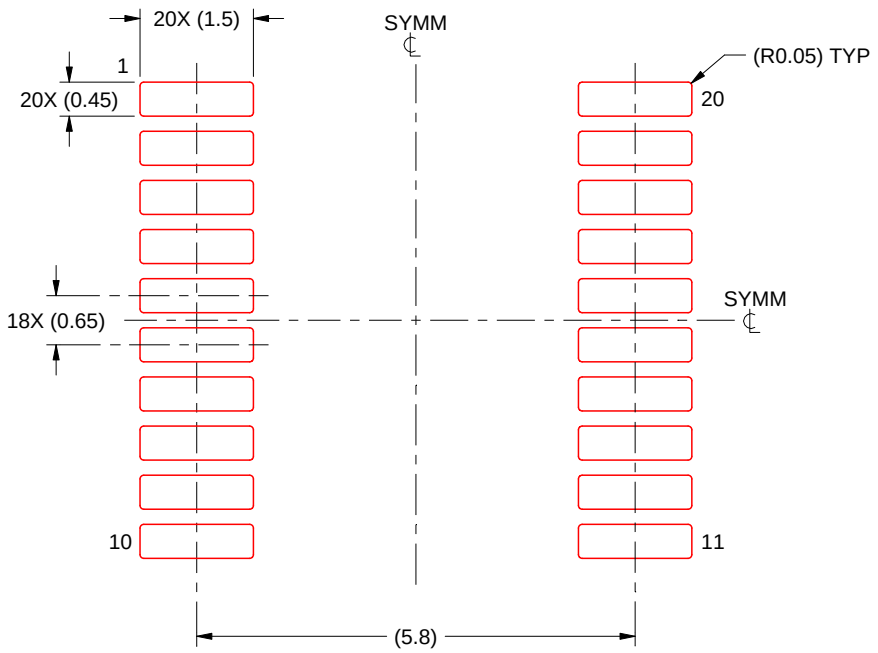

SOLDER PASTE EXAMPLE
BASED ON 0.125 mm THICK STENCIL
SCALE: 10X

4220206/A 02/2017

NOTES: (continued)

8. Laser cutting apertures with trapezoidal walls and rounded corners may offer better paste release. IPC-7525 may have alternate design recommendations.
9. Board assembly site may have different recommendations for stencil design.

PW (R–PDSO–G20) PLASTIC SMALL OUTLINE

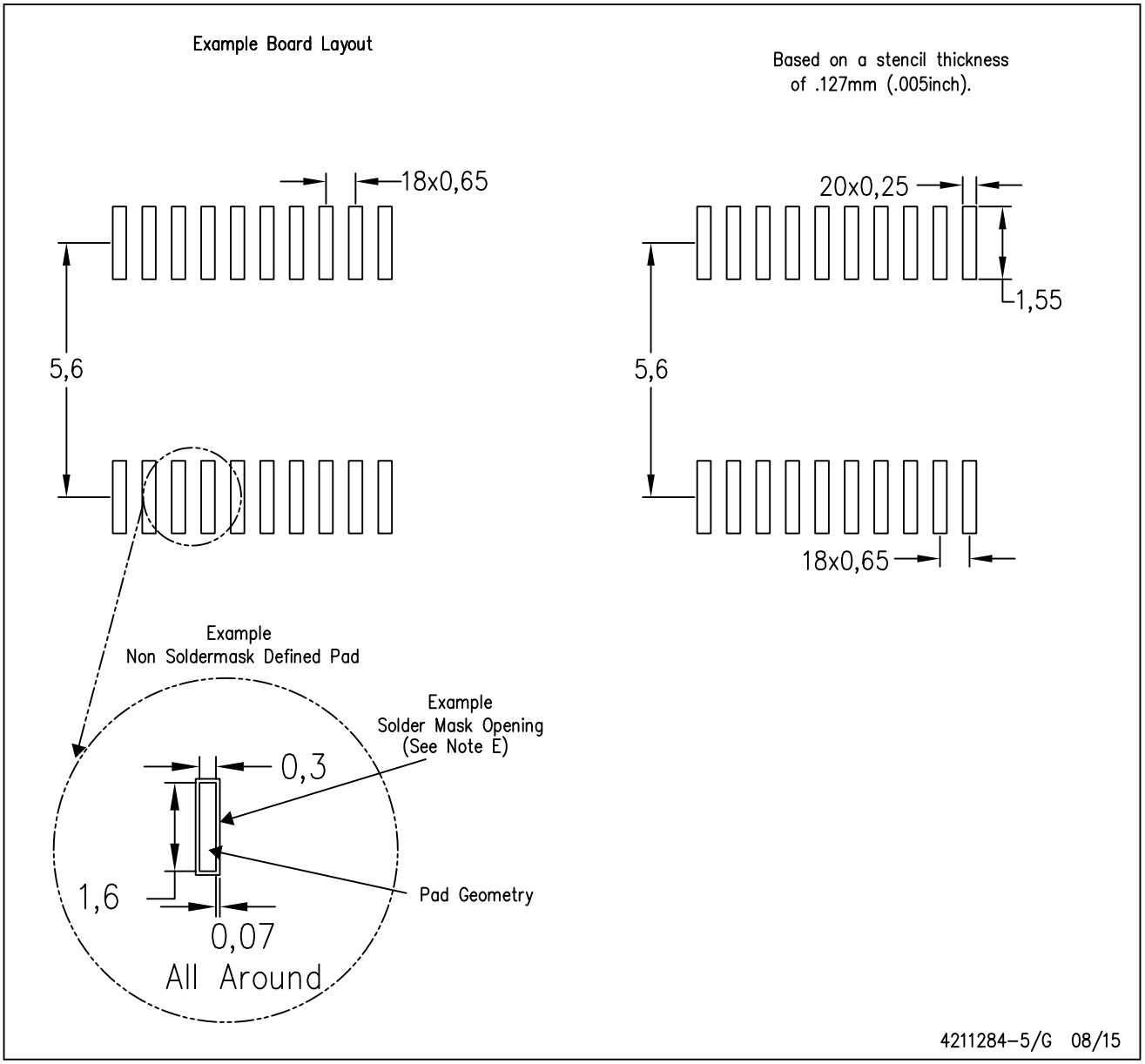

NOTES:
A. All linear dimensions are in millimeters.
B. This drawing is subject to change without notice.
C. Publication IPC–7351 is recommended for alternate design.
D. Laser cutting apertures with trapezoidal walls and also rounding corners will offer better paste release. Customers should contact their board assembly site for stencil design recommendations. Refer to IPC–7525 for other stencil recommendations.
E. Customers should contact their board fabrication site for solder mask tolerances between and around signal pads.

GENERIC PACKAGE VIEW

RHB 32

VQFN - 1 mm max height

5 x 5, 0.5 mm pitch

PLASTIC QUAD FLATPACK - NO LEAD

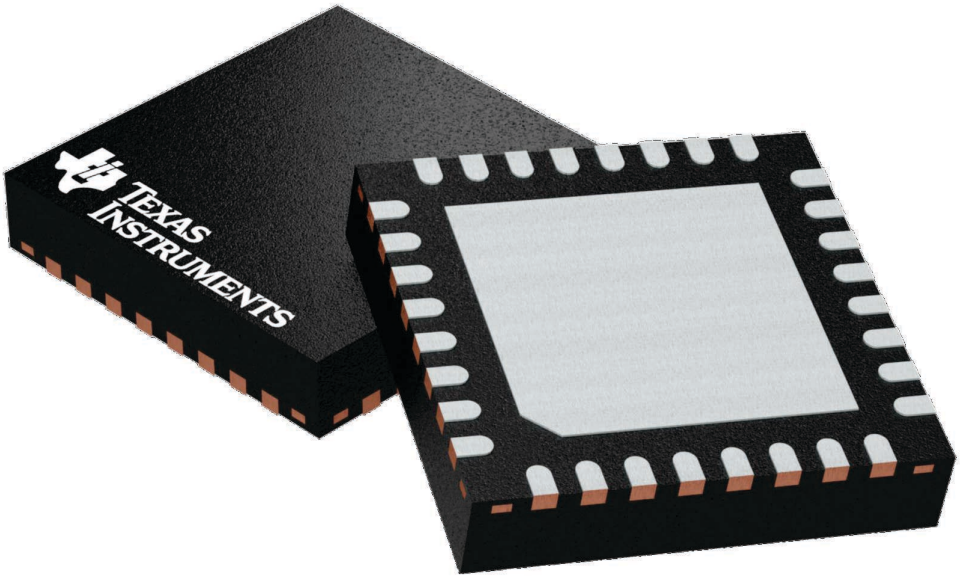

Images above are just a representation of the package family, actual package may vary.
Refer to the product data sheet for package details.

4224745/A

RHB0032E

PACKAGE OUTLINE

VQFN - 1 mm max height

PLASTIC QUAD FLATPACK - NO LEAD

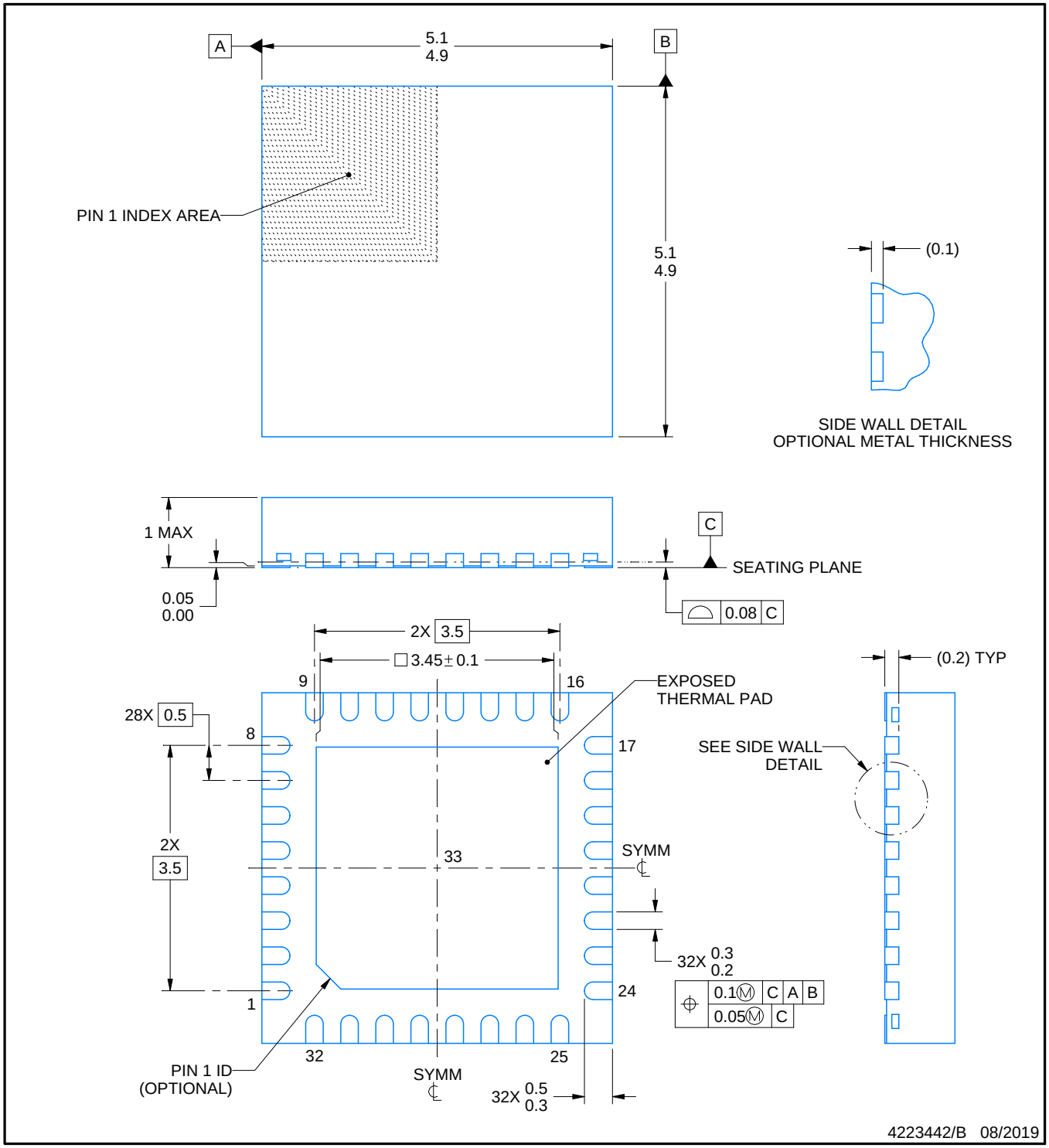

NOTES:

1. All linear dimensions are in millimeters. Any dimensions in parenthesis are for reference only. Dimensioning and tolerancing per ASME Y14.5M.
2. This drawing is subject to change without notice.
3. The package thermal pad must be soldered to the printed circuit board for thermal and mechanical performance.

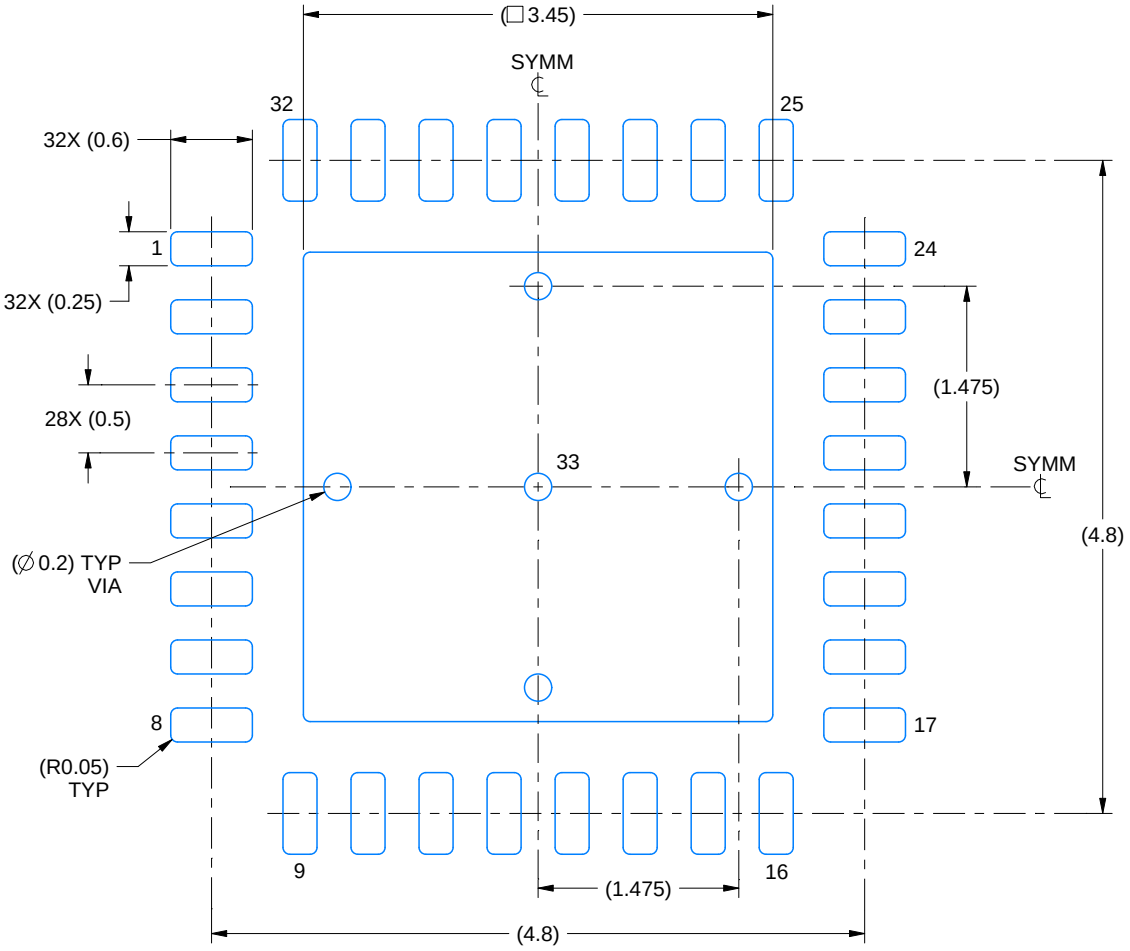

LAND PATTERN EXAMPLE
SCALE:18X

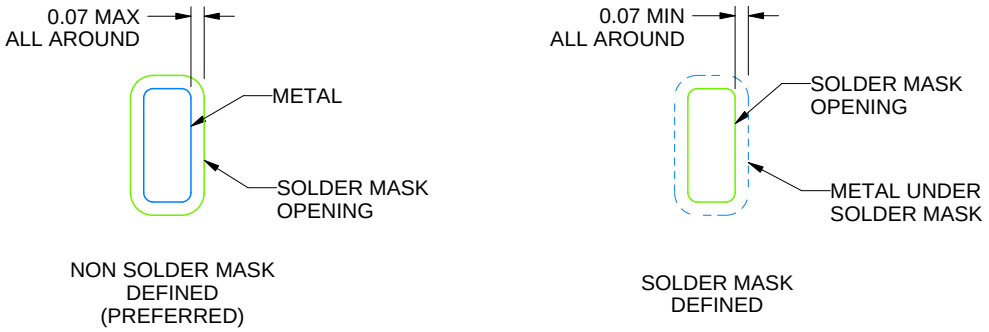

SOLDER MASK DETAILS

4223442/B 08/2019

NOTES: (continued)

4. This package is designed to be soldered to a thermal pad on the board. For more information, see Texas Instruments literature number SLUA271 (www.ti.com/lit/slua271).
5. Vias are optional depending on application, refer to device data sheet. If any vias are implemented, refer to their locations shown on this view. It is recommended that vias under paste be filled, plugged or tented.

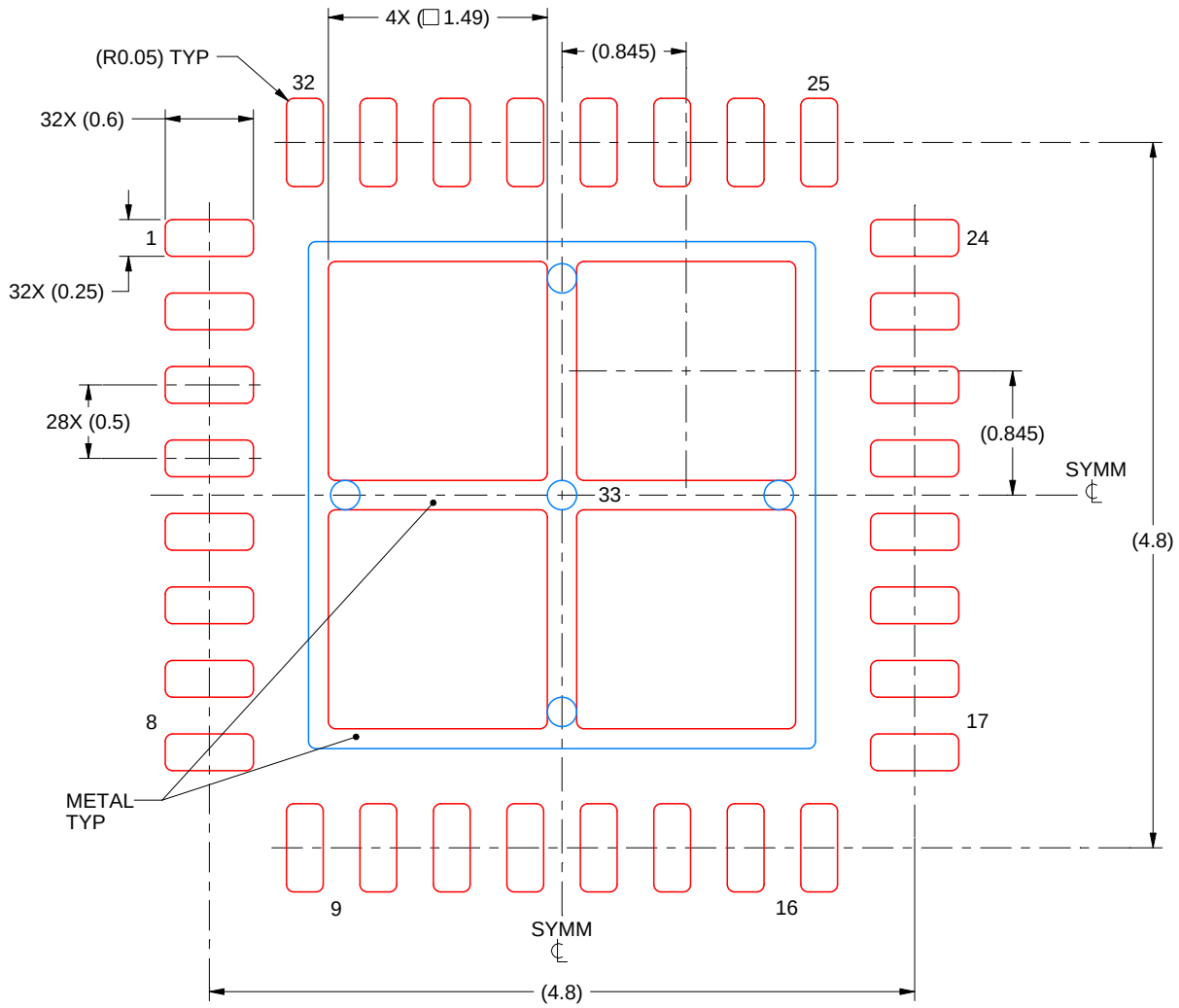

SOLDER PASTE EXAMPLE
BASED ON 0.125 mm THICK STENCIL

EXPOSED PAD 33:
75% PRINTED SOLDER COVERAGE BY AREA UNDER PACKAGE
SCALE:20X

4223442/B 08/2019

NOTES: (continued)

6. Laser cutting apertures with trapezoidal walls and rounded corners may offer better paste release. IPC-7525 may have alternate design recommendations.

DW (R–PDSO–G28) PLASTIC SMALL OUTLINE

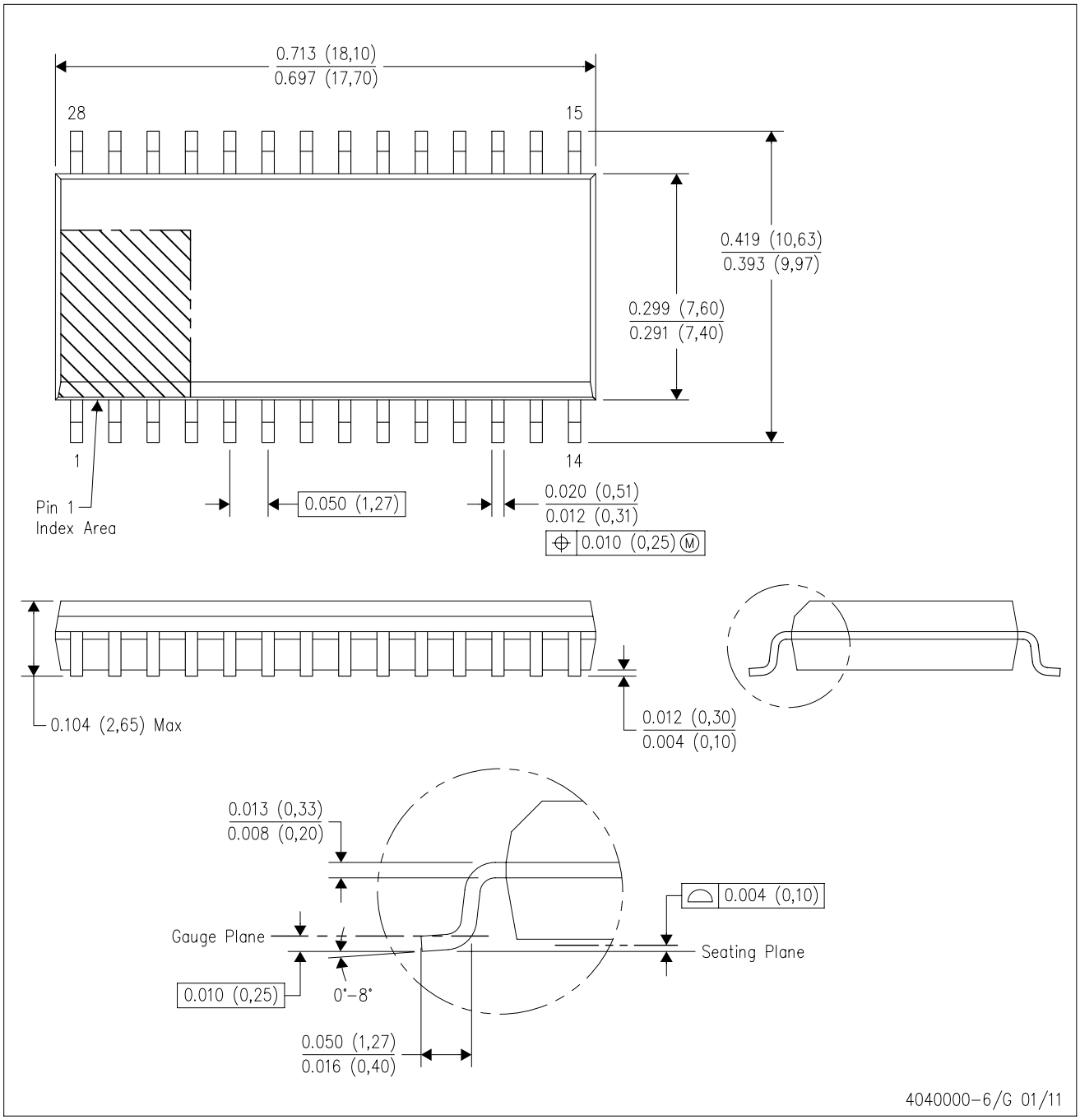

NOTES:
A. All linear dimensions are in inches (millimeters). Dimensioning and tolerancing per ASME Y14.5M–1994.
B. This drawing is subject to change without notice.
C. Body dimensions do not include mold flash or protrusion not to exceed 0.006 (0,15).
D. Falls within JEDEC MS–013 variation AE.

DW (R–PDSO–G28) PLASTIC SMALL OUTLINE

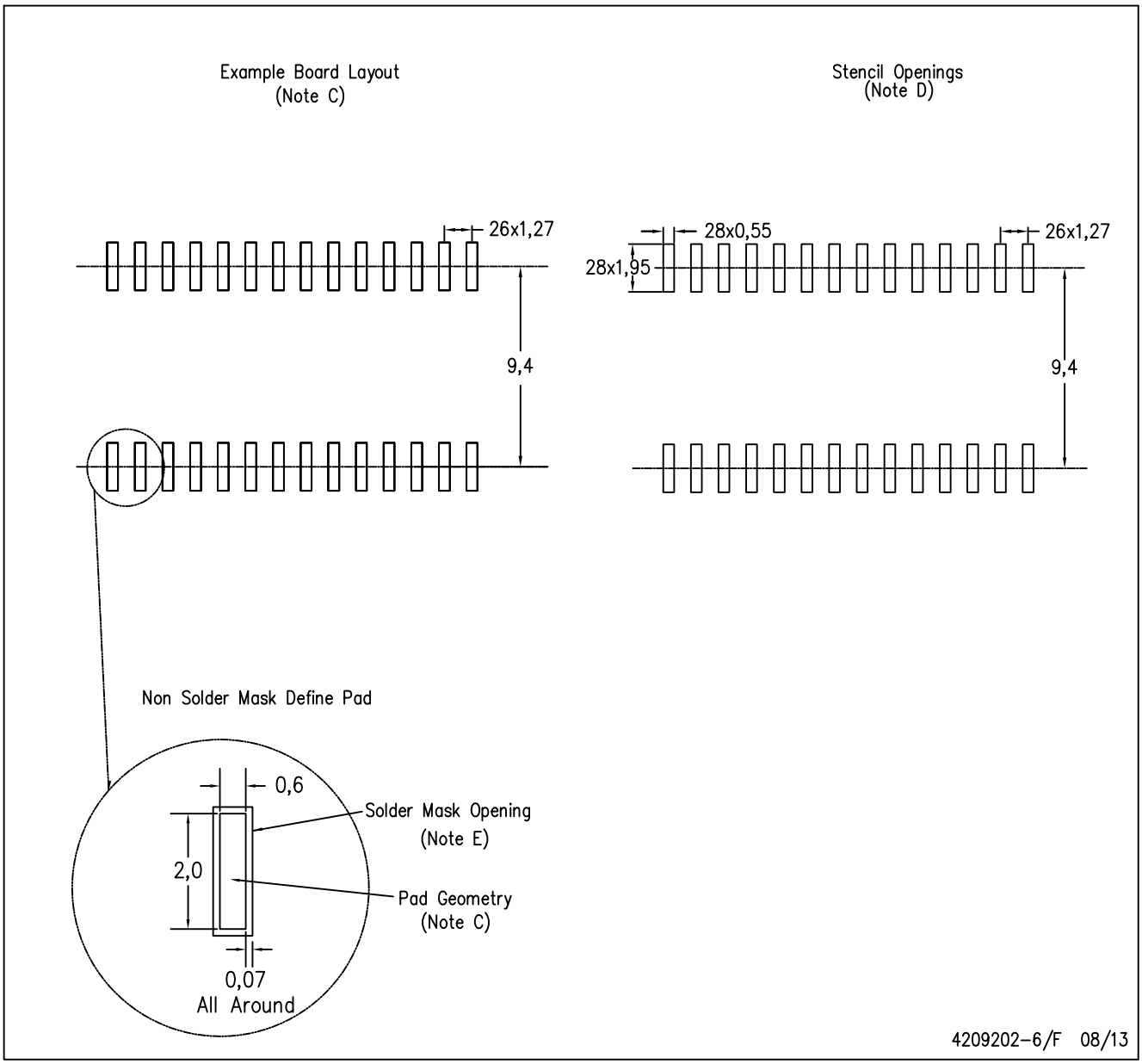

NOTES:
A. All linear dimensions are in millimeters.
B. This drawing is subject to change without notice.
C. Refer to IPC7351 for alternate board design.
D. Laser cutting apertures with trapezoidal walls and also rounding corners will offer better paste release. Customers should contact their board assembly site for stencil design recommendations. Refer to IPC–7525
E. Customers should contact their board fabrication site for solder mask tolerances between and around signal pads.

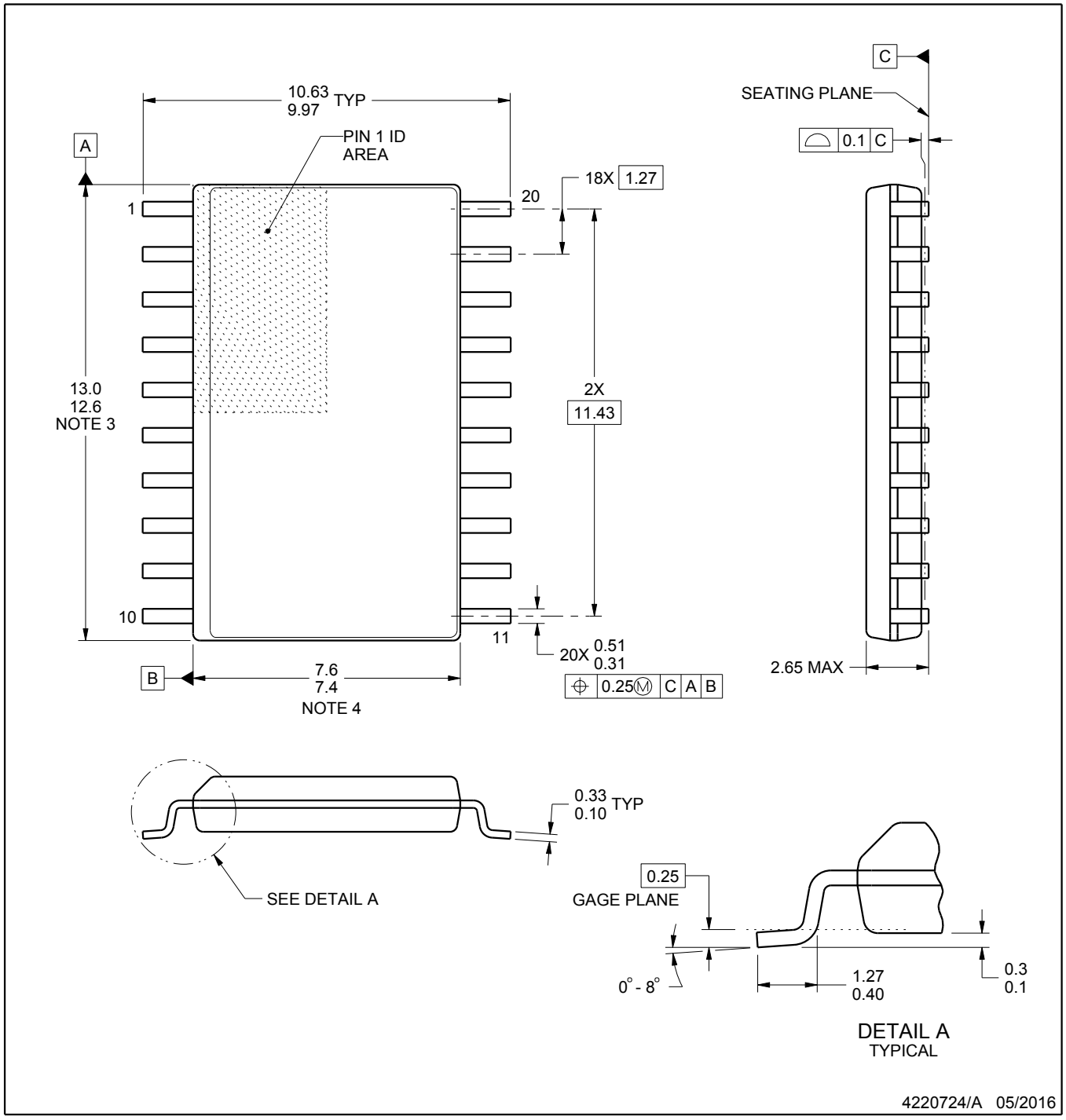

NOTES:

1. All linear dimensions are in millimeters. Dimensions in parenthesis are for reference only. Dimensioning and tolerancing per ASME Y14.5M.
2. This drawing is subject to change without notice.
3. This dimension does not include mold flash, protrusions, or gate burrs. Mold flash, protrusions, or gate burrs shall not exceed 0.15 mm per side.
4. This dimension does not include interlead flash. Interlead flash shall not exceed 0.43 mm per side.
5. Reference JEDEC registration MS-013.

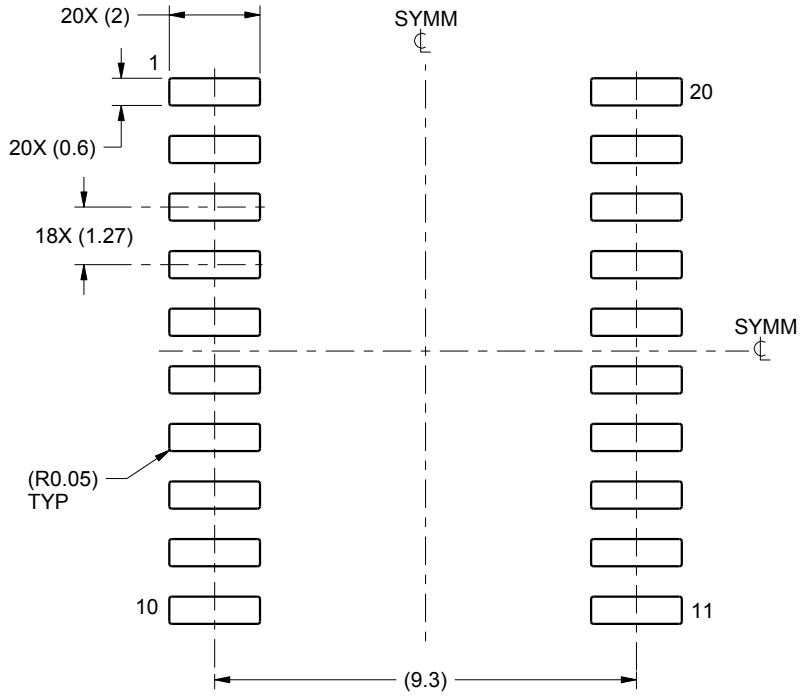

LAND PATTERN EXAMPLE
SCALE:6X

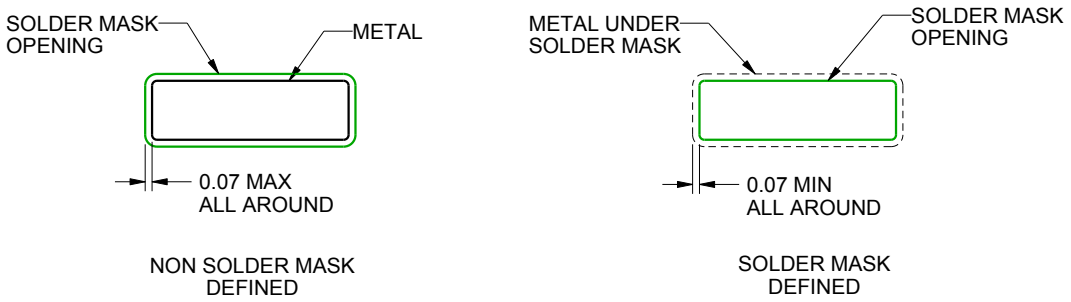

SOLDER MASK DETAILS

4220724/A 05/2016

NOTES: (continued)

6. Publication IPC-7351 may have alternate designs.
7. Solder mask tolerances between and around signal pads can vary based on board fabrication site.

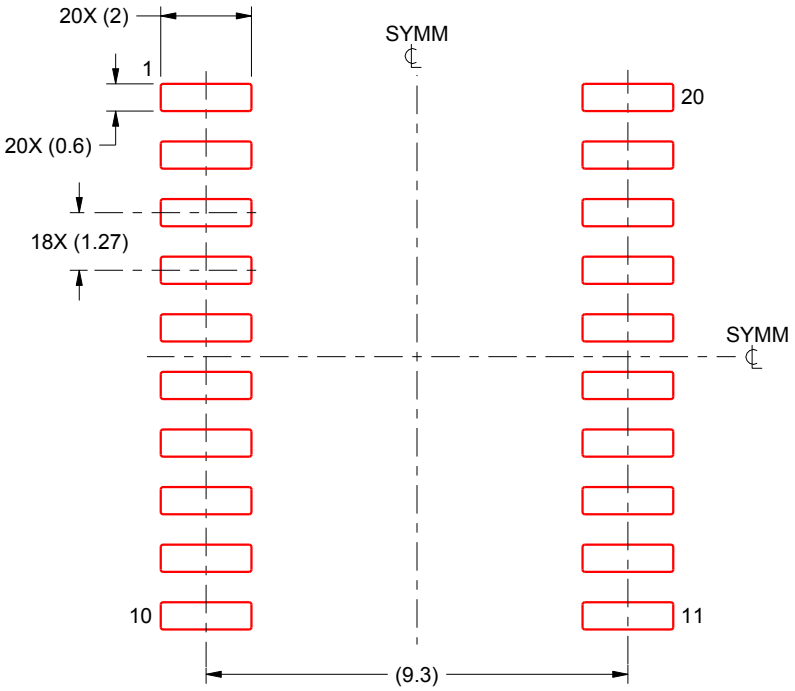

SOLDER PASTE EXAMPLE
BASED ON 0.125 mm THICK STENCIL
SCALE:6X

4220724/A 05/2016

NOTES: (continued)

8. Laser cutting apertures with trapezoidal walls and rounded corners may offer better paste release. IPC-7525 may have alternate design recommendations.
9. Board assembly site may have different recommendations for stencil design.

PW (R-PDSO-G28) PLASTIC SMALL OUTLINE

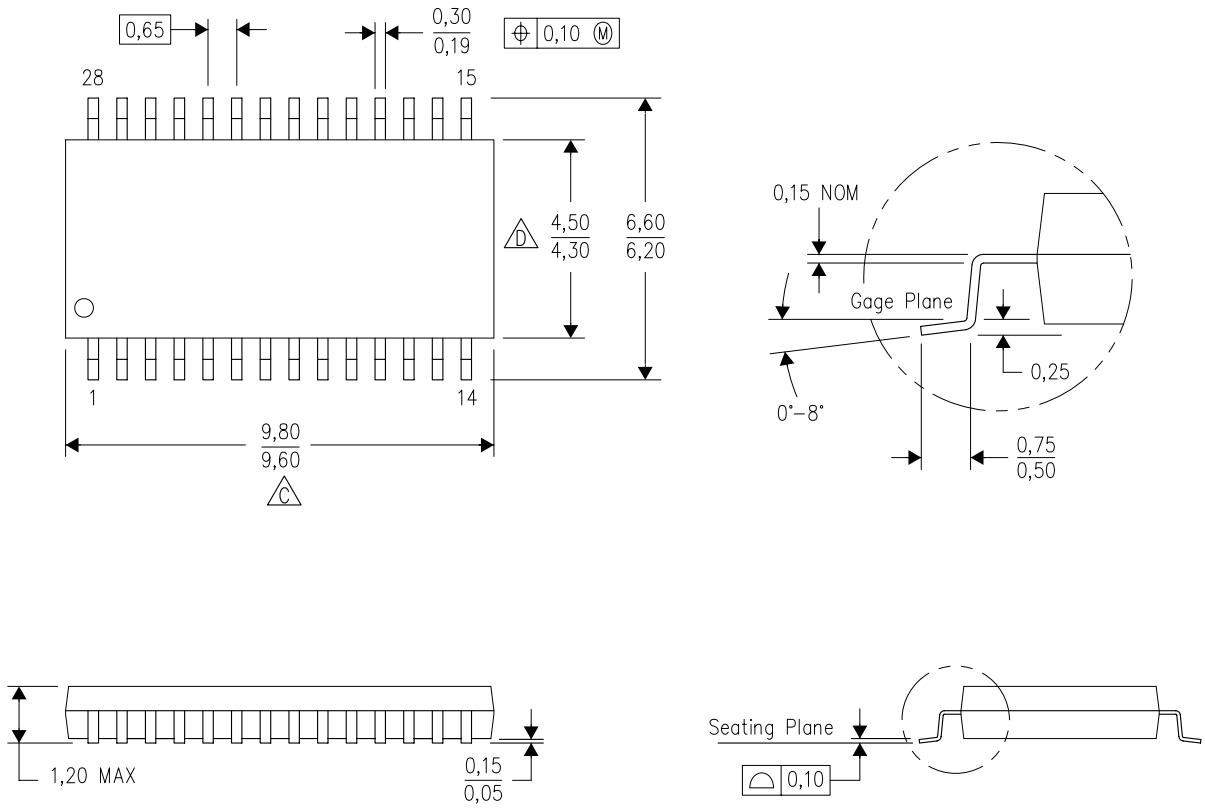

NOTES:
A. All linear dimensions are in millimeters. Dimensioning and tolerancing per ASME Y14.5M–1994.
B. This drawing is subject to change without notice.
C. Body length does not include mold flash, protrusions, or gate burrs. Mold flash, protrusions, or gate burrs shall not exceed 0,15 each side.
D. Body width does not include interlead flash. Interlead flash shall not exceed 0,25 each side.
E. Falls within JEDEC MO-153

PW (R–PDSO–G28) PLASTIC SMALL OUTLINE

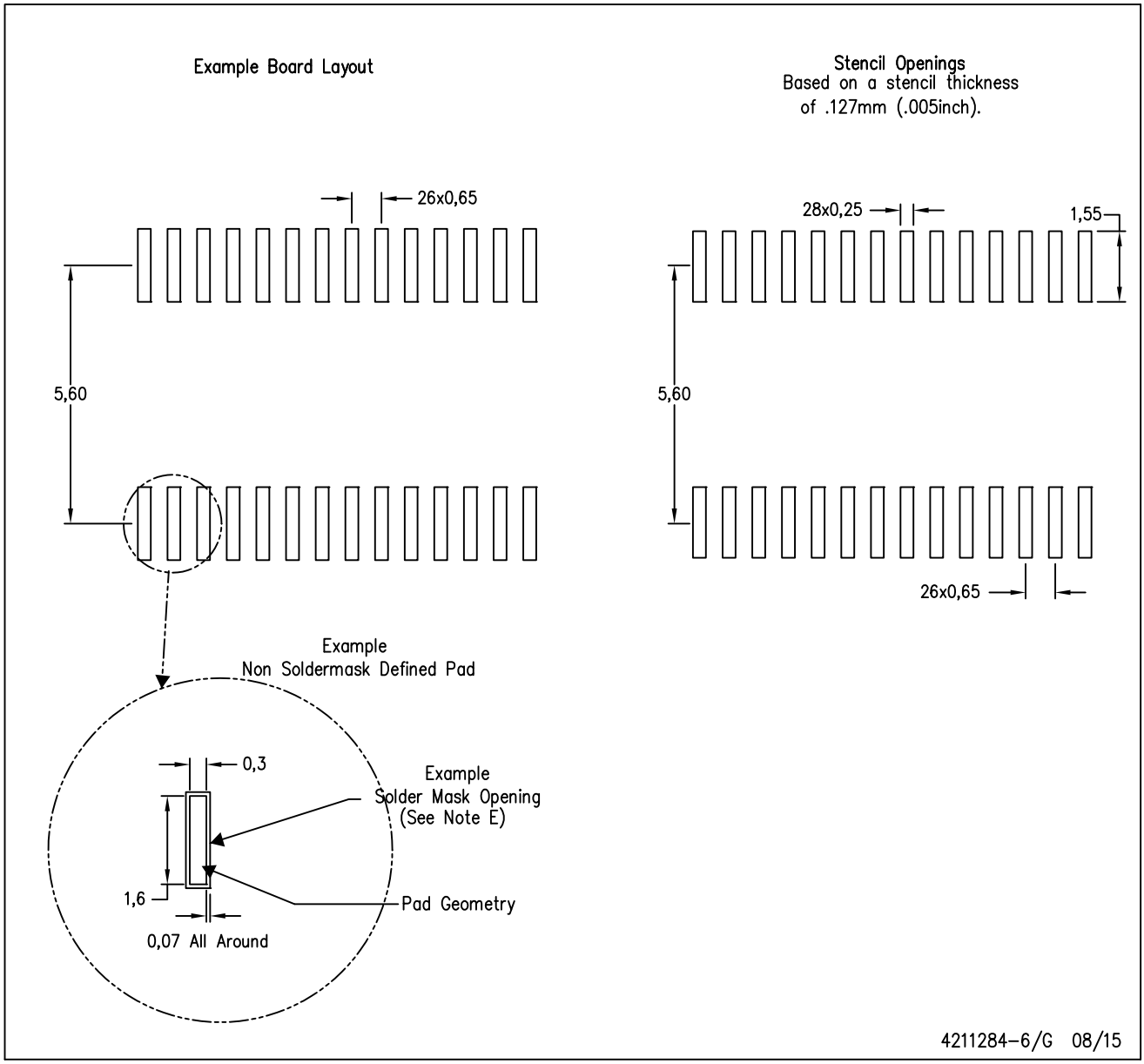

NOTES:
A. All linear dimensions are in millimeters.
B. This drawing is subject to change without notice.
C. Publication IPC–7351 is recommended for alternate design.
D. Laser cutting apertures with trapezoidal walls and also rounding corners will offer better paste release. Customers should contact their board assembly site for stencil design recommendations. Refer to IPC–7525 for other stencil recommendations.
E. Customers should contact their board fabrication site for solder mask tolerances between and around signal pads.

IMPORTANT NOTICE AND DISCLAIMER

TI PROVIDES TECHNICAL AND RELIABILITY DATA (INCLUDING DATA SHEETS), DESIGN RESOURCES (INCLUDING REFERENCE DESIGNS), APPLICATION OR OTHER DESIGN ADVICE, WEB TOOLS, SAFETY INFORMATION, AND OTHER RESOURCES “AS IS” AND WITH ALL FAULTS, AND DISCLAIMS ALL WARRANTIES, EXPRESS AND IMPLIED, INCLUDING WITHOUT LIMITATION ANY IMPLIED WARRANTIES OF MERCHANTABILITY, FITNESS FOR A PARTICULAR PURPOSE OR NON-INFRINGEMENT OF THIRD PARTY INTELLECTUAL PROPERTY RIGHTS.

These resources are intended for skilled developers designing with TI products. You are solely responsible for (1) selecting the appropriate TI products for your application, (2) designing, validating and testing your application, and (3) ensuring your application meets applicable standards, and any other safety, security, regulatory or other requirements.

These resources are subject to change without notice. TI grants you permission to use these resources only for development of an application that uses the TI products described in the resource. Other reproduction and display of these resources is prohibited. No license is granted to any other TI intellectual property right or to any third party intellectual property right. TI disclaims responsibility for, and you will fully indemnify TI and its representatives against, any claims, damages, costs, losses, and liabilities arising out of your use of these resources.

TI’s products are provided subject to TI’s Terms of Sale or other applicable terms available either on ti.com or provided in conjunction with such TI products. TI’s provision of these resources does not expand or otherwise alter TI’s applicable warranties or warranty disclaimers for TI products.

TI objects to and rejects any additional or different terms you may have proposed.

Mailing Address: Texas Instruments, Post Office Box 655303, Dallas, Texas 75265
Copyright © 2022, Texas Instruments Incorporated