DRV5056单极比例式线性霍尔效应传感器

1 特性

- 单极线性霍尔效应传感器
- 由 3.3V 和 5V 电源供电
- 具有 0.6V 静态失调电压的模拟输出：
  - 可最大限度地提高电压摆幅以实现高精度
- 磁性灵敏度选项（V_{CC} = 5V 时）：
  - A1：200mV/mT，20mT 范围
  - A2：100mV/mT，39mT 范围
  - A3：50mV/mT，79mT 范围
  - A4：25mV/mT，158mT 范围
  - A6：100mV/mT，39mT 范围
- 20kHz 快速检测带宽
- 低噪声输出，具有 ±1mA 的驱动能力
- 磁体温度漂移补偿
- 行业标准封装：
  - 表面贴装 SOT-23
  - 穿孔 TO-92

2 应用

- 精确位置检测
- 工业自动化和机器人
- 家用电器
- 游戏手柄、踏板、键盘、触发器
- 高度找平、倾斜和重量测量
- 流体流速测量
- 医疗设备
- 电流检测

3 说明

DRV5056 器件是一款线性霍尔效应传感器，可按比例响应南磁极磁通量密度。该器件可用于进行精确的位置检测，应用范围 广泛。

此模拟输出配备特色的单极磁响应，无磁场时可驱动 0.6V 的电压，存在南磁极时电压会升高。对于感应一个磁极 的应用， 此响应可以最大限度提高输出动态范围。4 种灵敏度选项可以基于所需的感应范围进一步最大限度提高输出摆幅。

该器件由 3.3V 或 5V 电源供电。它可检测垂直于封装顶部的磁通量，两个封装选项提供不同的检测方向。

该器件使用比例式架构，当外部模数转换器 (ADC) 使用相同的 V_{CC} 进行参考时，可以最大限度减小 V_{CC} 容差产生的误差。此外，该器件 还具有 磁体温度补偿功能，可以抵消磁体漂移，在 的宽温度范围内实现线性性能。

A1 至 A4 选项支持 –40°C 至 +125°C 的温度范围。A6 版本支持 0°C 至 85°C 的温度范围。

器件信息(1)

器件型号	封装	封装尺寸（标称值）
DRV5056	SOT-23 (3)	2.92mm × 1.30mm
	TO-92 (3)	4.00mm × 3.15mm

(1) 如需了解所有可用封装，请参阅数据表末尾的封装选项附录。

典型电路原理图

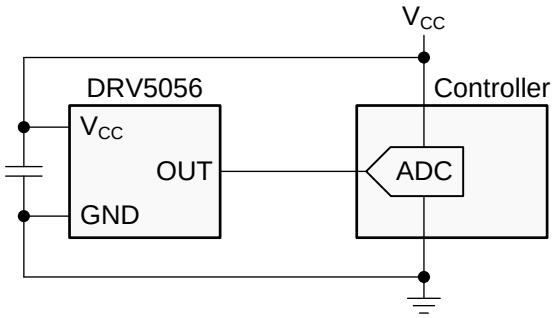

磁响应

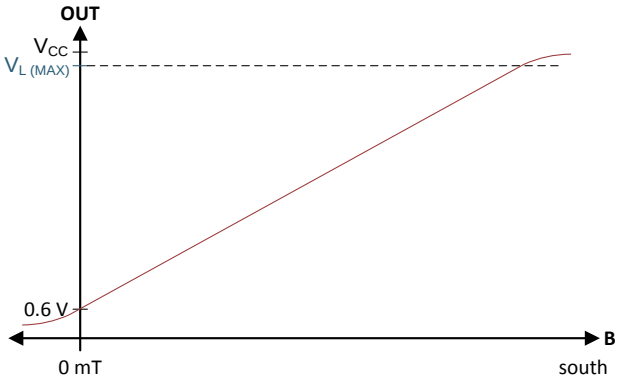

本文档旨在为方便起见，提供有关 TI 产品中文版本的信息，以确认产品的概要。 有关适用的官方英文版本的最新信息，请访问 www.ti.com，其内容始终优先。 TI 不保证翻译的准确性和有效性。 在实际设计之前，请务必参考最新版本的英文版本。

目录

1 特性 ... 1
2 应用 ... 1
3 说明 ... 1
4 修订历史记录 ... 2
5 Pin Configuration and Functions ... 3
6 Specifications ... 3
6.1 Absolute Maximum Ratings ... 3
6.2 ESD Ratings ... 4
6.3 Recommended Operating Conditions ... 4
6.4 Thermal Information ... 4
6.5 Electrical Characteristics ... 4
6.6 Magnetic Characteristics ... 5
6.7 Typical Characteristics ... 6
7 Detailed Description ... 9
7.1 Overview ... 9
7.2 Functional Block Diagram ... 9
7.3 Feature Description ... 9
7.4 Device Functional Modes ... 13
8 Application and Implementation ... 14
8.1 Application Information ... 14
8.2 Typical Application ... 15
8.3 What to Do and What Not to Do ... 17
9 Power Supply Recommendations ... 19
10 Layout ... 19
10.1 Layout Guidelines ... 19
10.2 Layout Examples ... 19
11 器件和文档支持 ... 20
11.1 文档支持 ... 20
11.2 接收文档更新通知 ... 20
11.3 社区资源 ... 20
11.4 商标 ... 20
11.5 静电放电警告 ... 20
11.6 术语表 ... 20
12 机械、封装和可订购信息 ... 20

4 修订历史记录

注：之前版本的页码可能与当前版本有所不同。

Changes from Original (April 2018) to Revision A	Page
• 已添加 在数据表中添加了新的 A6 磁性灵敏度选项	1

Copyright © 2018–2019, Texas Instruments Incorporated

5 Pin Configuration and Functions

DBZ Package
3-Pin SOT-23
Top View

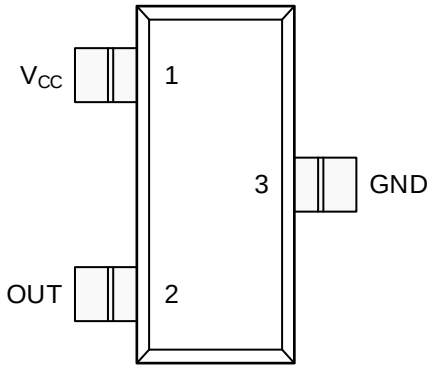

LPG Package
3-Pin TO-92
Top View

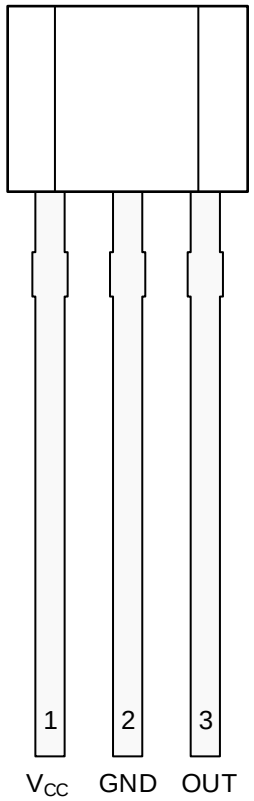

Pin Functions

PIN			I/O	DESCRIPTION
NAME	SOT-23	TO-92		
GND	3	2	—	Ground reference
OUT	2	3	O	Analog output
V_{CC}	1	1	—	Power supply. TI recommends connecting this pin to a ceramic capacitor to ground with a value of at least 0.1 µF.

6 Specifications

6.1 Absolute Maximum Ratings

over operating free-air temperature range (unless otherwise noted)[(1)]

		MIN	MAX	UNIT
Power supply voltage	V_{CC}	–0.3	7	V
Output voltage	OUT	–0.3	V_{CC} + 0.3	V
Magnetic flux density, B_{MAX}		Unlimited		T
Operating junction temperature, T_J		–40	150	°C
Storage temperature, T_{stg}		–65	150	°C

(1) Stresses beyond those listed under *Absolute Maximum Ratings* may cause permanent damage to the device. These are stress ratings only, which do not imply functional operation of the device at these or any other conditions beyond those indicated under *Recommended Operating Conditions*. Exposure to absolute-maximum-rated conditions for extended periods may affect device reliability.

Copyright © 2018–2019, Texas Instruments Incorporated

6.2 ESD Ratings

			VALUE	UNIT
$V_{(ESD)}$	Electrostatic discharge	Human-body model (HBM), per ANSI/ESDA/JEDEC JS-001 (1)	±2500	V
		Charged-device model (CDM), per JEDEC specification JESD22-C101 (2)	±750	

(1) JEDEC document JEP155 states that 500-V HBM allows safe manufacturing with a standard ESD control process.
(2) JEDEC document JEP157 states that 250-V CDM allows safe manufacturing with a standard ESD control process.

6.3 Recommended Operating Conditions

over operating free-air temperature range (unless otherwise noted)

		MIN	MAX	UNIT
V_{CC}	Power supply voltage (1)	3	3.6	V
		4.5	5.5	
I_O	Output continuous current	–1	1	mA
T_A	A1-A4 versions operating ambient temperature (2)	–40	125	°C
T_A	A6 version operating ambient temperature (2)	0	85	°C

(1) There are two isolated operating V_{CC} ranges. For more information see the *Operating V_{CC} Ranges* section.
(2) Power dissipation and thermal limits must be observed.

6.4 Thermal Information

THERMAL METRIC (1)		DRV5056		UNIT
		SOT-23 (DBZ)	TO-92 (LPG)	
		3 PINS	3 PINS	
$R_{\theta JA}$	Junction-to-ambient thermal resistance	170	121	°C/W
$R_{\theta JC(top)}$	Junction-to-case (top) thermal resistance	66	67	°C/W
$R_{\theta JB}$	Junction-to-board thermal resistance	49	97	°C/W
Y_{JT}	Junction-to-top characterization parameter	1.7	7.6	°C/W
Y_{JB}	Junction-to-board characterization parameter	48	97	°C/W

(1) For more information about traditional and new thermal metrics, see the *Semiconductor and IC Package Thermal Metrics* application report.

6.5 Electrical Characteristics

for V_{CC} = 3 V to 3.63 V and 4.5 V to 5.5 V, over operating free-air temperature range (unless otherwise noted)

PARAMETER		TEST CONDITIONS (1)		MIN	TYP	MAX	UNIT
I_{CC}	Operating supply current				6	10	mA
t_{ON}	Power-on time (see 图 19)	B = 0 mT, no load on OUT			150	300	µs
f_{BW}	Sensing bandwidth				20		kHz
t_d	Propagation delay time	From change in B to change in OUT			10		µs
B_{ND}	Input-referred RMS noise density	V_{CC} = 5 V			130		nT/√Hz
		V_{CC} = 3.3 V			215		
B_N	Input-referred noise	$B_{ND} \times 6.6 \times \sqrt{20\ kHz}$	V_{CC} = 5 V		0.12		mT_{PP}
			V_{CC} = 3.3 V		0.2		
V_N	Output-referred noise (2)	$B_N \times S$	DRV5056A1		24		mV_{PP}
			DRV5056A2, DRV5056A6		12		
			DRV5056A3		6		
			DRV5056A4		3		

(1) B is the applied magnetic flux density.
(2) V_N describes voltage noise on the device output. If the full device bandwidth is not needed, noise can be reduced with an RC filter.

Copyright © 2018–2019, Texas Instruments Incorporated

6.6 Magnetic Characteristics

for V_{CC} = 3 V to 3.63 V and 4.5 V to 5.5 V, over operating free-air temperature range (unless otherwise noted)

PARAMETER		TEST CONDITIONS(1)		MIN	TYP	MAX	UNIT
V_Q	Quiescent voltage	B = 0 mT, T_A = 25°C	DRV5056A1	0.535	0.6	0.665	V
			DRV5056A2, DRV5056A6	0.54	0.6	0.66	
			DRV5056A3, DRV5056A4	0.55	0.6	0.65	
$V_{Q\Delta T}$	Quiescent voltage temperature drift	B = 0 mT, T_A = –40°C to 125°C versus 25°C	V_{CC} = 5 V		0.08		V
			V_{CC} = 3.3 V		0.04		
$V_{Q\Delta L}$	Quiescent voltage lifetime drift	High-temperature operating stress for 1000 hours			< 0.5%		
S	Sensitivity	V_{CC} = 5 V, T_A = 25°C	DRV5056A1	190	200	210	mV/mT
			DRV5056A2, DRV5056A6	95	100	105	
			DRV5056A3	47.5	50	52.5	
			DRV5056A4	23.8	25	26.2	
		V_{CC} = 3.3 V, T_A = 25°C	DRV5056A1	114	120	126	
			DRV5056A2, DRV5056A6	57	60	63	
			DRV5056A3	28.5	30	31.5	
			DRV5056A4	14.3	15	15.8	
B_L	Linear magnetic sensing range(2)	V_{CC} = 5 V, T_A = 25°C	DRV5056A1	20			mT
			DRV5056A2, DRV5056A6	39			
			DRV5056A3	79			
			DRV5056A4	158			
		V_{CC} = 3.3 V, T_A = 25°C	DRV5056A1	19			
			DRV5056A2, DRV5056A6	39			
			DRV5056A3	78			
			DRV5056A4	155			
V_L	Linear range of output voltage(3)			V_Q		V_{CC} – 0.2	V
S_{TC}	Sensitivity temperature compensation for magnets(4)	DRV5056A6		0.05	0.12	0.19	%/°C
S_{TC}	Sensitivity temperature compensation for magnets(4)	DRV5056A1, DRV5056A2, DRV5056A3, DRV5056A4			0.12		%/°C
S_{LE}	Sensitivity linearity error(3)	V_{OUT} is within V_L			±1%		
S_{RE}	Sensitivity ratiometry error(5)	T_A = 25°C, with respect to V_{CC} = 3.3 V or 5 V		-2.5%		2.5%	
$S_{\Delta L}$	Sensitivity lifetime drift	High-temperature operating stress for 1000 hours			< 0.5%		

(1) B is the applied magnetic flux density.
(2) B_L describes the minimum linear sensing range at 25°C taking into account the maximum V_Q and Sensitivity tolerances.
(3) See the *Sensitivity Linearity* section.
(4) S_{TC} describes the rate the device increases Sensitivity with temperature. For more information, see the *Sensitivity Temperature Compensation For Magnets* section.
(5) See the *Ratiometric Architecture* section.

6.7 Typical Characteristics

at T_A = 25°C (unless otherwise noted)

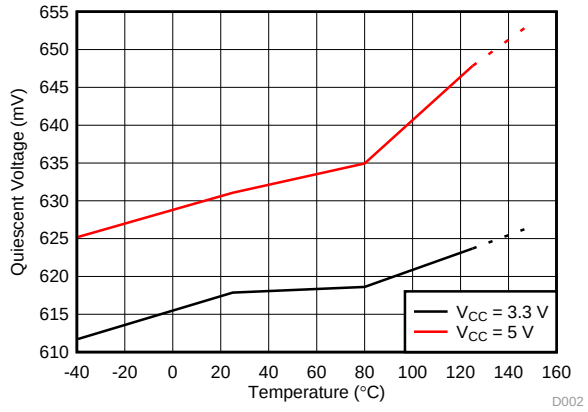

图 1. Quiescent Voltage vs Temperature

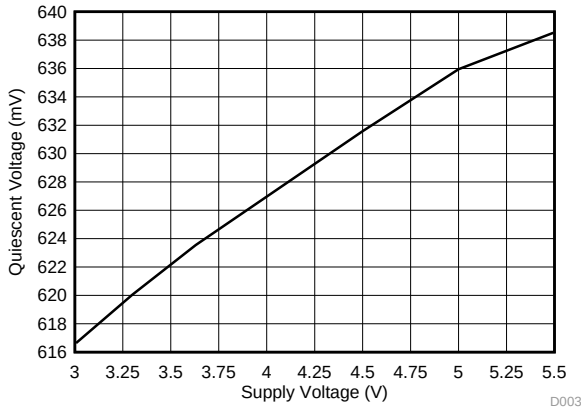

图 2. Quiescent Voltage vs Supply Voltage

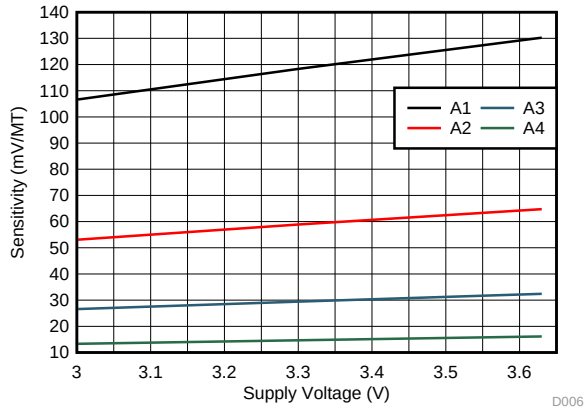

V_{CC} = 3.3 V

图 3. Sensitivity vs Supply Voltage

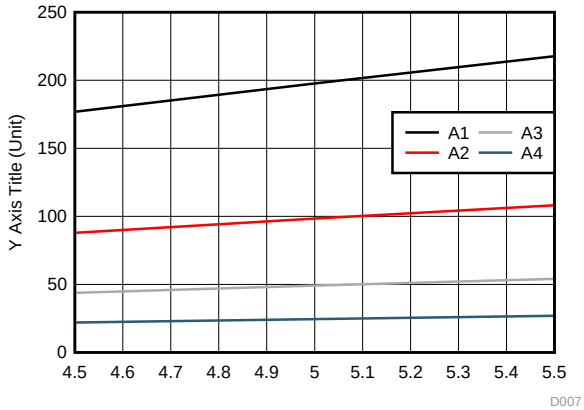

V_{CC} = 5 V

图 4. Sensitivity vs Supply Voltage

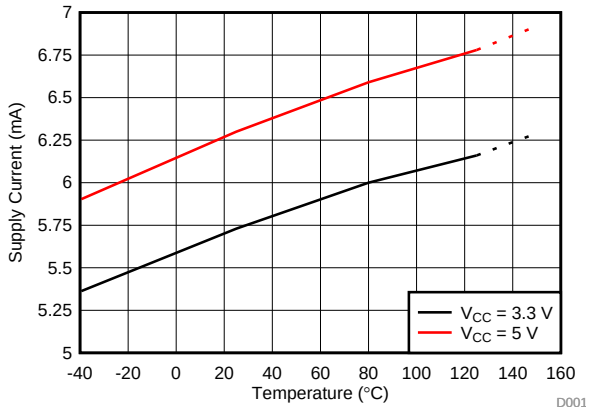

图 5. Supply Current vs Temperature

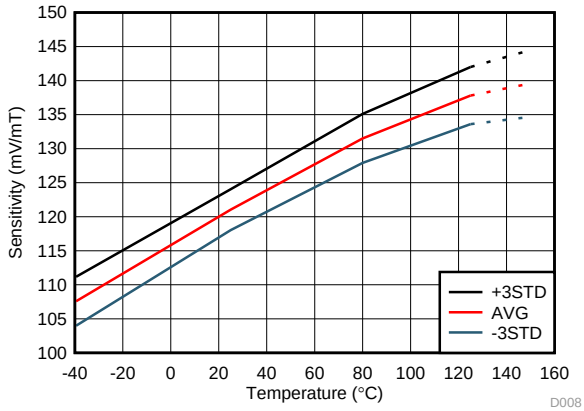

DRV5056A1, V_{CC} = 3.3 V

图 6. Sensitivity vs Temperature

版权 © 2018–2019, Texas Instruments Incorporated

Typical Characteristics (接下页)

at T_A = 25°C (unless otherwise noted)

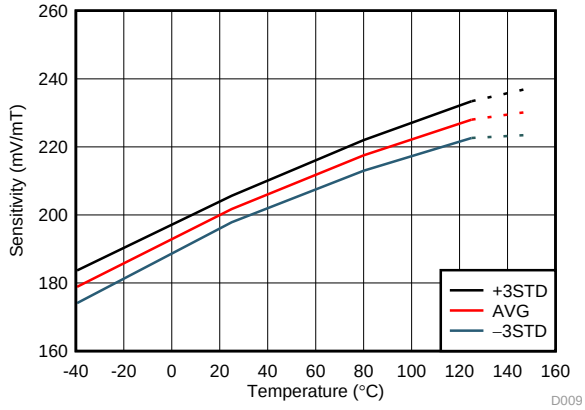

DRV5056A1, V_{CC} = 5.0 V

图 7. Sensitivity vs Temperature

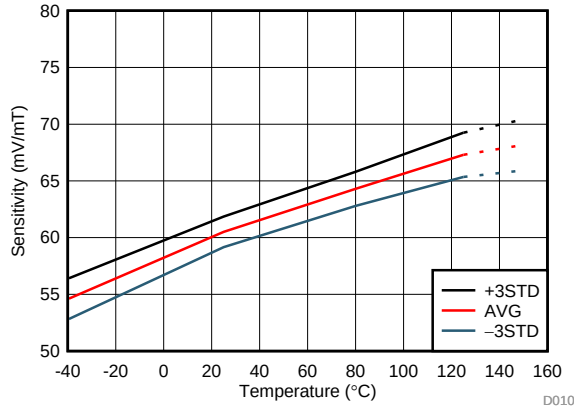

DRV5056A2, V_{CC} = 3.3 V

图 8. Sensitivity vs Temperature

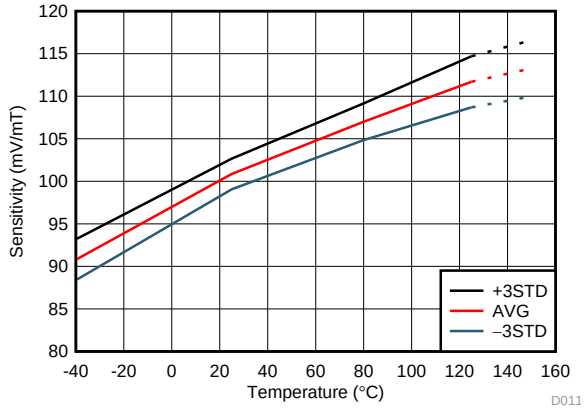

DRV5056A2, V_{CC} = 5.0 V

图 9. Sensitivity vs Temperature

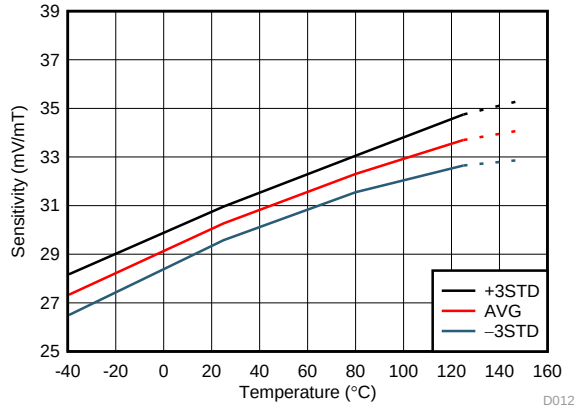

DRV5056A3, V_{CC} = 3.3 V

图 10. Sensitivity vs Temperature

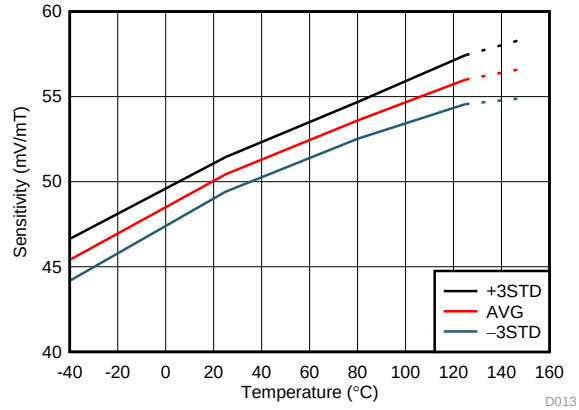

DRV5056A3, V_{CC} = 5.0 V

图 11. Sensitivity vs Temperature

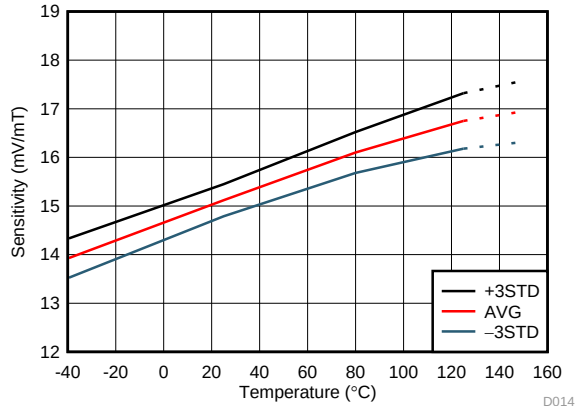

DRV5056A4, V_{CC} = 3.3 V

图 12. Sensitivity vs Temperature

Typical Characteristics (接下页)

at T_A = 25°C (unless otherwise noted)

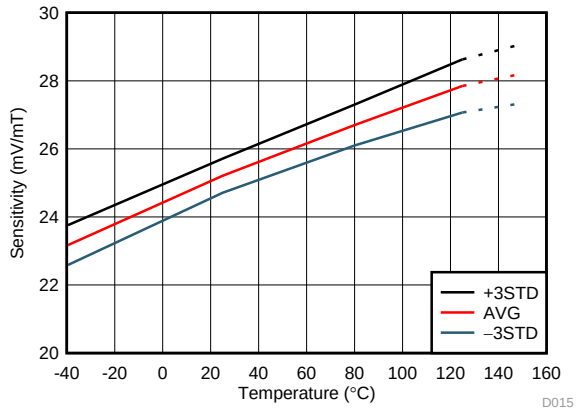

DRV5056A4, V_{CC} = 5.0 V

图 13. Sensitivity vs Temperature

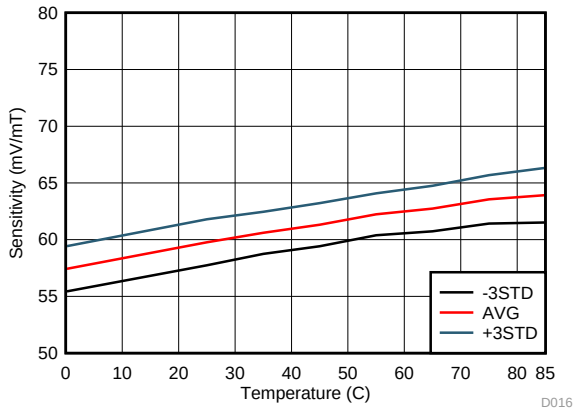

DRV5056A6, V_{CC} = 3.3 V

图 14. Sensitivity vs Temperature

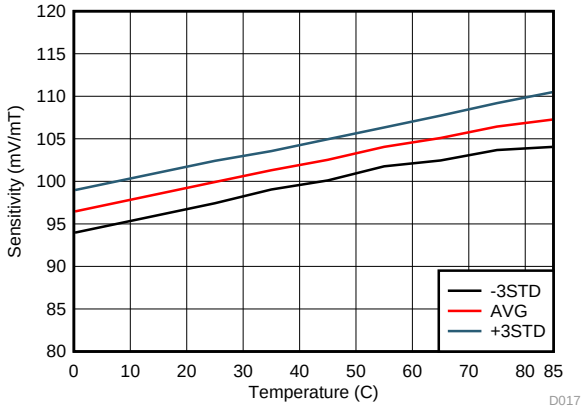

DRV5056A6, V_{CC} = 5.0 V

图 15. Sensitivity vs Temperature

版权 © 2018–2019, Texas Instruments Incorporated

7 Detailed Description

7.1 Overview

The DRV5056 is a 3-pin linear Hall effect sensor with fully integrated signal conditioning, temperature compensation circuits, mechanical stress cancellation, and amplifiers. The device operates from 3.3-V and 5-V (±10%) power supplies, measures magnetic flux density, and outputs a proportional analog voltage that is referenced to V_{CC}.

7.2 Functional Block Diagram

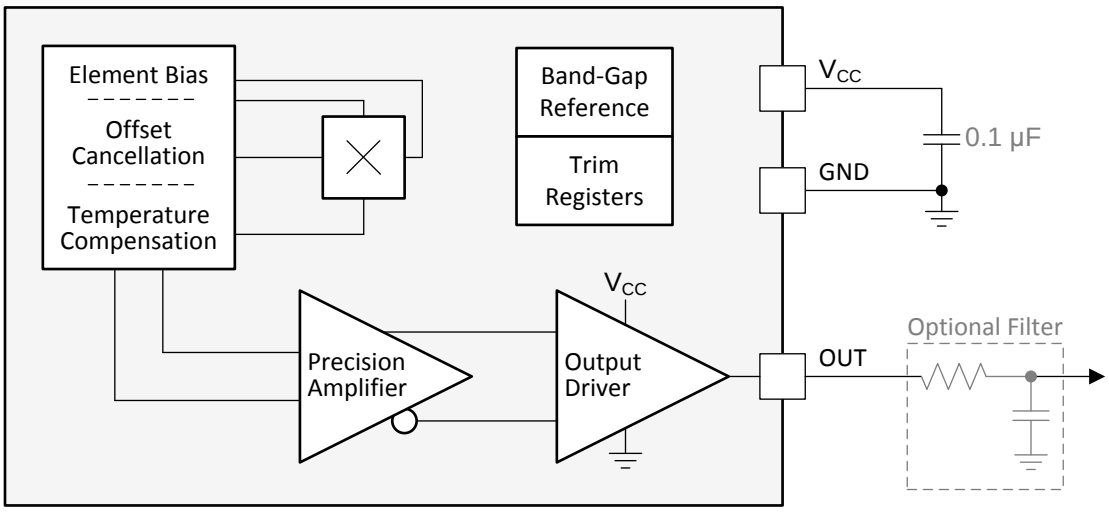

7.3 Feature Description

7.3.1 Magnetic Flux Direction

As shown in 图 16, the DRV5056 is sensitive to the magnetic field component that is perpendicular to the die inside the package.

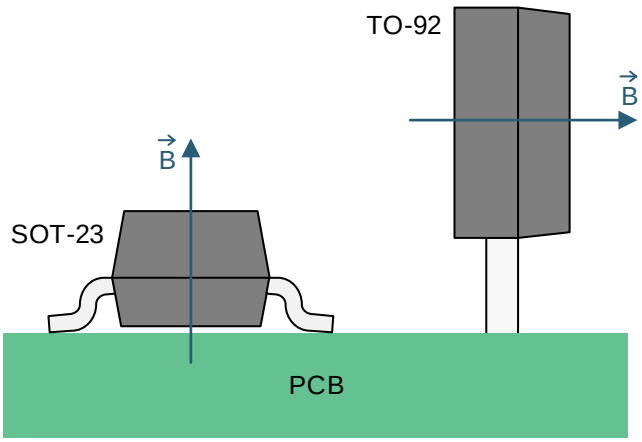

图 16. Direction of Sensitivity

Feature Description (接下页)

Magnetic flux that travels from the bottom to the top of the package is considered positive. This condition exists when a south magnetic pole is near the top (marked-side) of the package. Magnetic flux that travels from the top to the bottom of the package results in negative millitesla values.

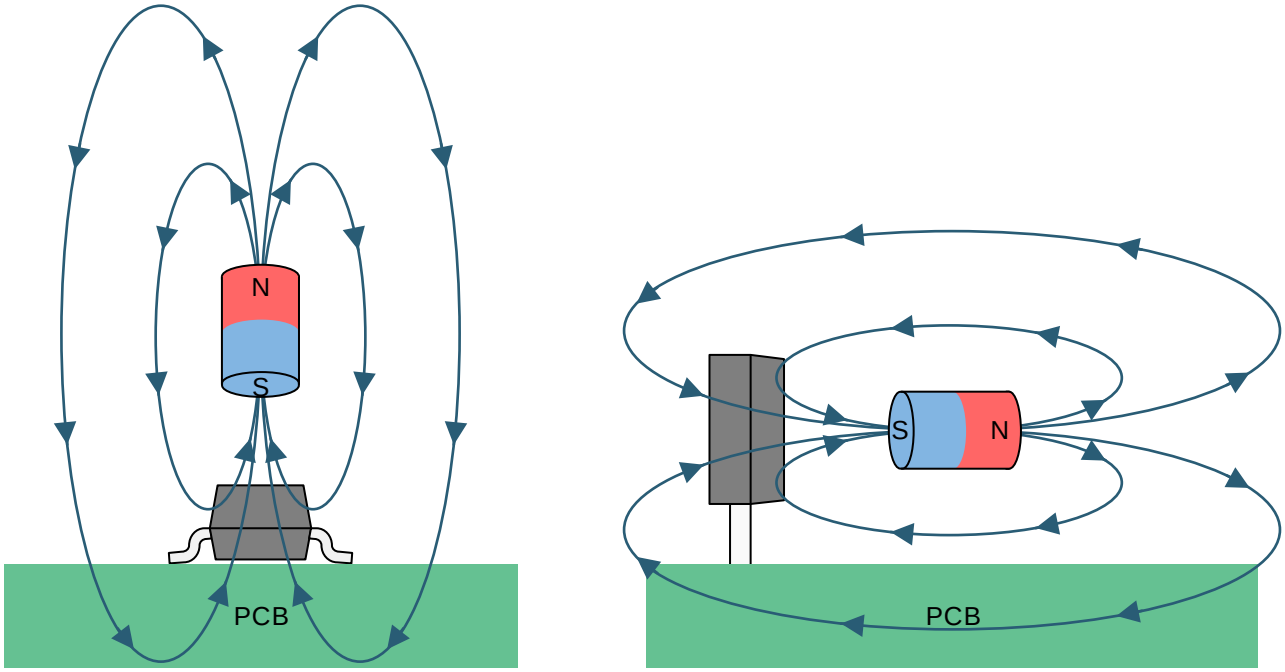

图 17. The Flux Direction for Positive B

7.3.2 Magnetic Response

The DRV5056 outputs an analog voltage according to 公式 1 when in the presence of a magnetic field:

$$V_{OUT} = V_Q + B \times \left(\text{Sensitivity}_{(25°C)} \times (1 + S_{TC} \times (T_A - 25°C))\right)$$

where

- V_Q is typically 600 mV
- B is the applied magnetic flux density
- $\text{Sensitivity}_{(25°C)}$ depends on the device option and V_{CC}
- S_{TC} is typically 0.12%/°C
- T_A is the ambient temperature
- V_{OUT} is within the V_L range (1)

As an example, consider the DRV5056A3 with V_{CC} = 3.3 V, a temperature of 50°C, and 67 mT applied. Excluding tolerances, V_{OUT} = 600 mV + 67 mT × (30 mV/mT × [1 + 0.0012/°C × (50°C – 25°C)]) = 2.67 V.

The DRV5056 only responds to the flux density of a magnetic south pole.

版权 © 2018–2019, Texas Instruments Incorporated

Feature Description (接下页)

7.3.3 Sensitivity Linearity

The device produces a linear response when the output voltage is within the specified V_L range. Outside this range, sensitivity is reduced and nonlinear. 图 18 graphs the magnetic response.

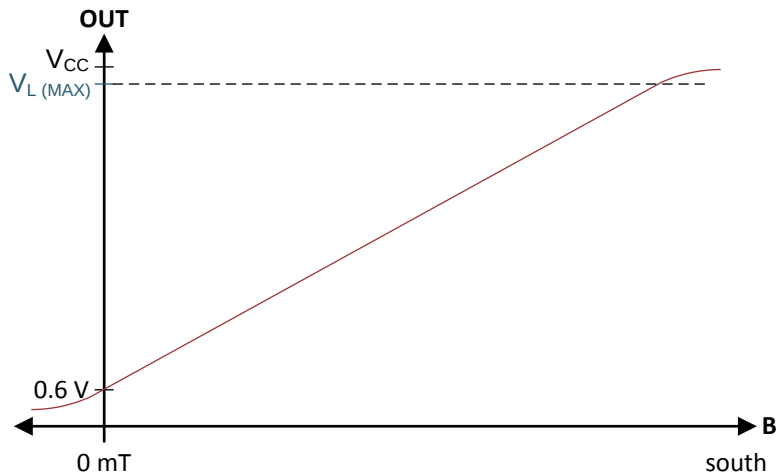

图 18. Magnetic Response

公式 2 calculates parameter B_L, the minimum linear sensing range at 25°C taking into account the maximum quiescent voltage and sensitivity tolerances.

$$B_{L(MIN)} = \frac{V_{L(MAX)} - V_{Q(MAX)}}{S_{(MAX)}} \quad (2)$$

The parameter S_{LE} defines linearity error as the difference in sensitivity between any two positive B values when the output is within the V_L range.

7.3.4 Ratiometric Architecture

The DRV5056 has a ratiometric analog architecture that scales the sensitivity linearly with the power-supply voltage. For example, the sensitivity is 5% higher when V_{CC} = 5.25 V compared to V_{CC} = 5 V. This behavior enables external ADCs to digitize a more consistent value regardless of the power-supply voltage tolerance, when the ADC uses V_{CC} as its reference.

公式 3 calculates sensitivity ratiometry error:

$$S_{RE} = 1 - \frac{S_{(VCC)} / S_{(5V)}}{V_{CC} / 5V} \text{ for } V_{CC} = 4.5 \text{ V to } 5.5 \text{ V}, \qquad S_{RE} = 1 - \frac{S_{(VCC)} / S_{(3.3V)}}{V_{CC} / 3.3V} \text{ for } V_{CC} = 3 \text{ V to } 3.6 \text{ V}$$

where

- $S_{(VCC)}$ is the sensitivity at the current V_{CC} voltage
- $S_{(5V)}$ or $S_{(3.3V)}$ is the sensitivity when V_{CC} = 5 V or 3.3 V
- V_{CC} is the current V_{CC} voltage (3)

Feature Description (接下页)

7.3.5 Operating V_{CC} Ranges

The DRV5056 has two recommended operating V_{CC} ranges: 3 V to 3.6 V and 4.5 V to 5.5 V. When V_{CC} is in the middle region between 3.6 V to 4.5 V, the device continues to function, but sensitivity is less known because there is a crossover threshold near 4 V that adjusts device characteristics.

7.3.6 Sensitivity Temperature Compensation For Magnets

Magnets generally produce weaker fields as temperature increases. The DRV5056 compensates by increasing sensitivity with temperature, as defined by the parameter S_{TC}. The sensitivity at T_A = 125°C is typically 12% higher than at T_A = 25°C.

7.3.7 Power-On Time

After the V_{CC} voltage is applied, the DRV5056 requires a short initialization time before the output is set. The parameter t_{ON} describes the time from when V_{CC} crosses 3 V until OUT is within 5% of V_Q, with 0 mT applied and no load attached to OUT. 图 19 shows this timing diagram.

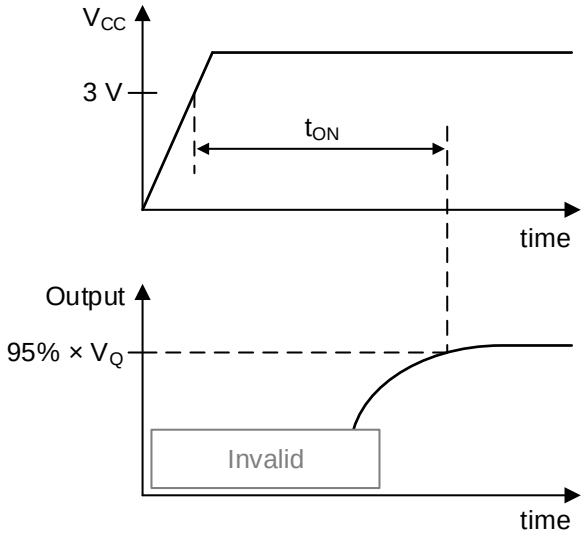

图 19. t_{ON} Definition

版权 © 2018–2019, Texas Instruments Incorporated

Feature Description (接下页)

7.3.8 Hall Element Location

图 20 shows the location of the sensing element inside each package option.

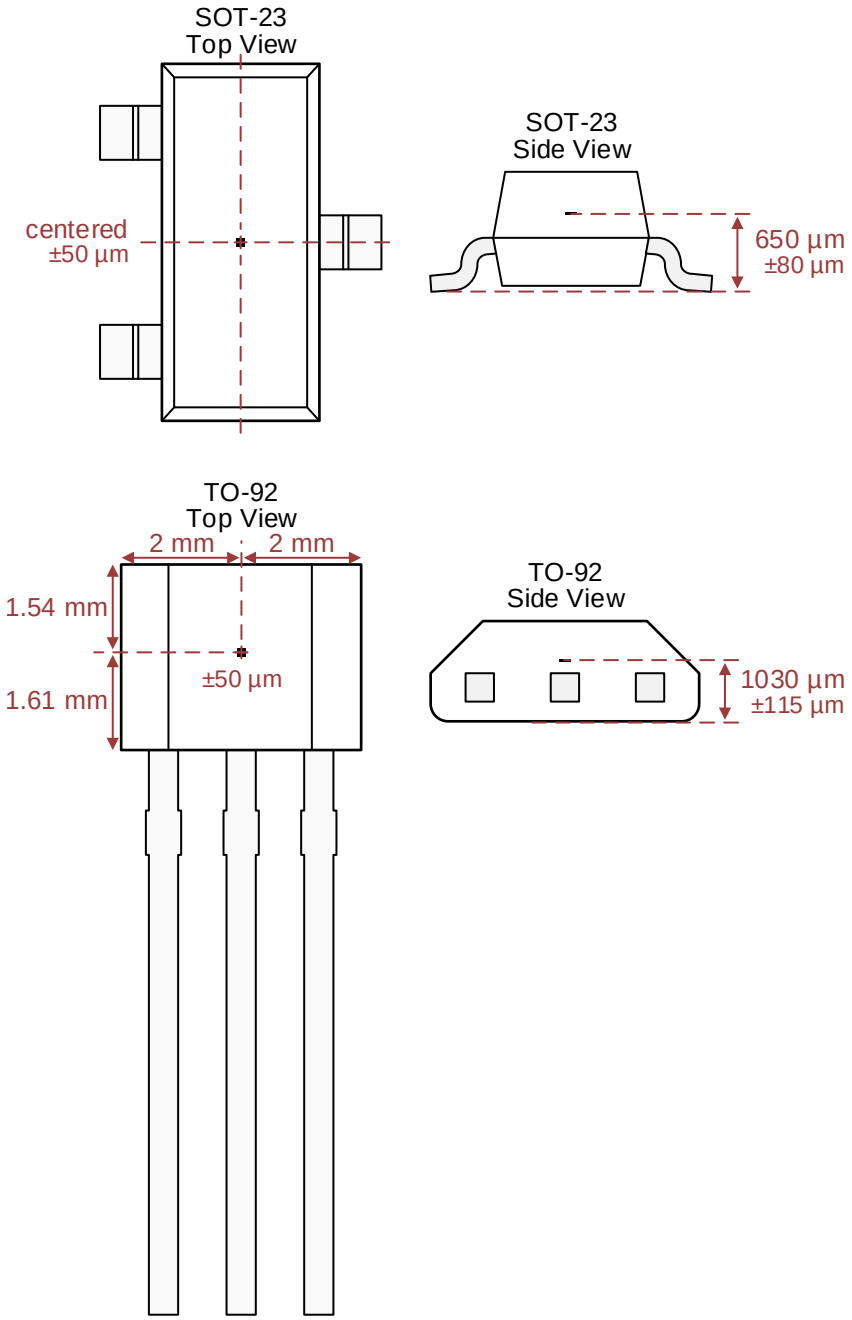

图 20. Hall Element Location

7.4 Device Functional Modes

The DRV5056 has one mode of operation that applies when the *Recommended Operating Conditions* are met.

8 Application and Implementation

注

Information in the following applications sections is not part of the TI component specification, and TI does not warrant its accuracy or completeness. TI's customers are responsible for determining suitability of components for their purposes. Customers should validate and test their design implementation to confirm system functionality.

8.1 Application Information

8.1.1 Selecting the Sensitivity Option

Select the highest DRV5056 sensitivity option that can measure the required range of magnetic flux density, so that the output voltage swing is maximized.

Larger magnets and greater sensing distances can generally enable better positional accuracy than very small magnets at close distances, because magnetic flux density increases exponentially with the proximity to a magnet.

8.1.2 Temperature Compensation for Magnets

The DRV5056 temperature compensation is designed to directly compensate the average drift of neodymium (NdFeB) magnets and partially compensate ferrite magnets. The residual flux density (B_r) of a magnet typically reduces by 0.12%/°C for NdFeB, and 0.20%/°C for ferrite. When the operating temperature range of a system is reduced, temperature drift errors are also reduced.

8.1.3 Adding a Low-Pass Filter

As illustrated in the *Functional Block Diagram*, an RC low-pass filter can be added to the device output for the purpose of minimizing voltage noise when the full 20-kHz bandwidth is not needed. This filter can improve the signal-to-noise ratio (SNR) and overall accuracy. Do not connect a capacitor directly to the device output without a resistor in between because doing so can make the output unstable.

8.1.4 Designing for Wire Break Detection

Some systems must detect if interconnect wires become open or shorted. The DRV5056 can support this function.

First, select a sensitivity option that causes the output voltage to stay within the V_L range during normal operation. Second, add a pullup resistor between OUT and V_{CC}. TI recommends a value between 20 kΩ to 100 kΩ, and the current through OUT must not exceed the I_O specification, including current going into an external ADC. Then, if the output voltage is ever measured to be within 150 mV of V_{CC} or GND, a fault condition exists. 图 21 shows the circuit, and 表 1 describes fault scenarios.

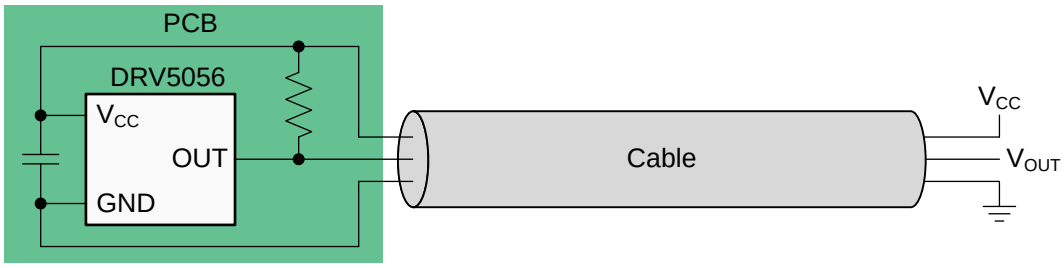

图 21. Wire Fault Detection Circuit

版权 © 2018–2019, Texas Instruments Incorporated

表 1. Fault Scenarios and the Resulting V_{OUT}

FAULT SCENARIO	V_{OUT}
V_{CC} disconnects	Close to GND
GND disconnects	Close to V_{CC}
V_{CC} shorts to OUT	Close to V_{CC}
GND shorts to OUT	Close to GND

8.2 Typical Application

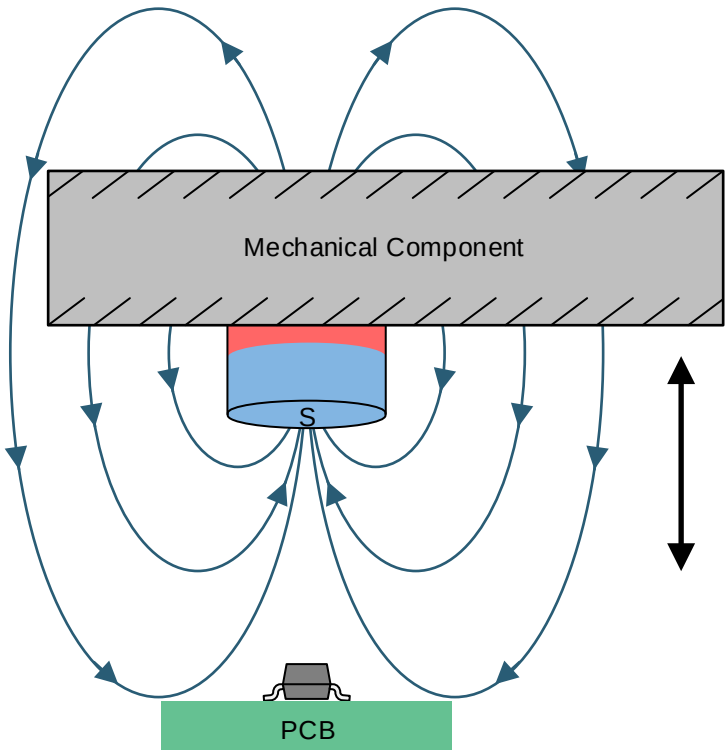

图 22. Unipolar Sensing Application

8.2.1 Design Requirements

Use the parameters listed in 表 2 for this design example.

表 2. Design Parameters

DESIGN PARAMETER	EXAMPLE VALUE
V_{CC}	3.3 V
Magnet	10-mm diameter × 6-mm long cylinder, ferrite
Distance from magnet to sensor	From 20 mm to 3 mm
Maximum B at the sensor at 25°C	72 mT at 3 mm
Device option	DRV5056A3-Q1

8.2.2 Detailed Design Procedure

This design example consists of a mechanical component that moves back and forth, an embedded magnet with the south pole facing the printed-circuit board, and a DRV5056. The DRV5056 outputs an analog voltage that describes the precise position of the component. The component must not contain ferromagnetic materials such as iron, nickel, and cobalt because these materials change the magnetic flux density at the sensor.

When designing a linear magnetic sensing system, always consider these three variables: the magnet, sensing distance, and range of the sensor. Select the DRV5056 with the highest sensitivity that has a B_L (linear magnetic sensing range) that is larger than the maximum magnetic flux density in the application.

Magnets are made from various ferromagnetic materials that have tradeoffs in cost, drift with temperature, absolute maximum temperature ratings, remanence or residual induction (B_r), and coercivity (H_c). The B_r and the dimensions of a magnet determine the magnetic flux density (B) produced in 3-dimensional space. For simple magnet shapes, such as rectangular blocks and cylinders, there are simple equations that solve B at a given distance centered with the magnet. 图 23 shows diagrams for 公式 4 and 公式 5.

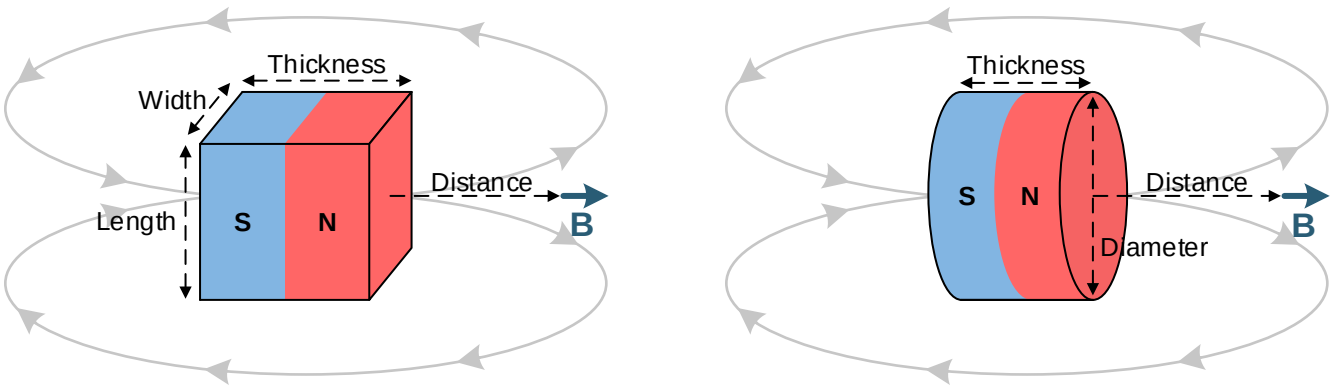

图 23. Rectangular Block and Cylinder Magnets

Use 公式 4 for the rectangular block shown in 图 23:

$$\vec{B} = \frac{B_r}{\pi}\left(\arctan\left(\frac{WL}{2D\sqrt{4D^2 + W^2 + L^2}}\right) - \arctan\left(\frac{WL}{2(D+T)\sqrt{4(D+T)^2 + W^2 + L^2}}\right)\right) \tag{4}$$

Use 公式 5 for the cylinder shown in 图 23:

$$\vec{B} = \frac{B_r}{2}\left(\frac{D+T}{\sqrt{(0.5C)^2 + (D+T)^2}} - \frac{D}{\sqrt{(0.5C)^2 + D^2}}\right)$$

where

- W is width
- L is length
- T is thickness (the direction of magnetization)
- D is distance
- C is diameter (5)

版权 © 2018–2019, Texas Instruments Incorporated

8.2.3 Application Curve

图 24 shows the magnetic flux density versus distance for a 10-mm × 6-mm cylinder ferrite magnet.

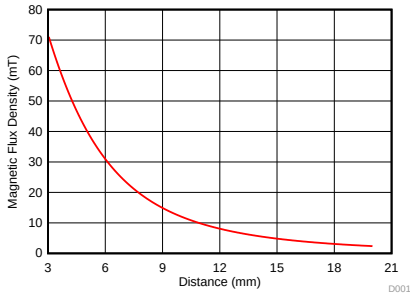

图 24. Magnetic Profile of a 10-mm × 6-mm Cylindrical Ferrite Magnet

8.3 What to Do and What Not to Do

Because the Hall element is sensitive to magnetic fields that are perpendicular to the top of the package, a correct magnet approach must be used for the sensor to detect the field. 图 25 illustrates correct and incorrect approaches.

What to Do and What Not to Do (接下页)

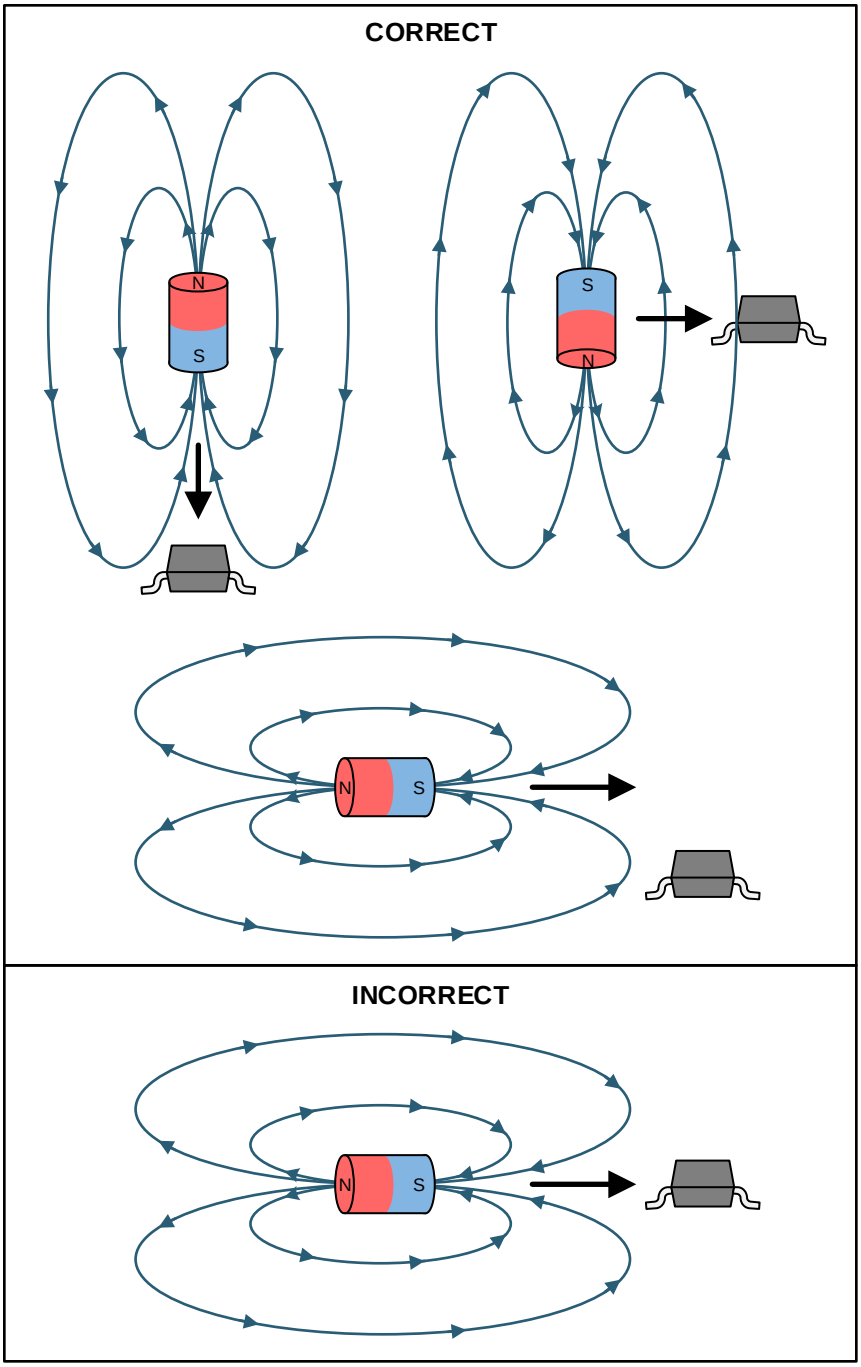

图 25. Correct and Incorrect Magnet Approaches

版权 © 2018–2019, Texas Instruments Incorporated

9 Power Supply Recommendations

A decoupling capacitor close to the device must be used to provide local energy with minimal inductance. TI recommends using a ceramic capacitor with a value of at least 0.01 µF.

10 Layout

10.1 Layout Guidelines

Magnetic fields pass through most nonferromagnetic materials with no significant disturbance. Embedding Hall effect sensors within plastic or aluminum enclosures and sensing magnets on the outside is common practice. Magnetic fields also easily pass through most printed-circuit boards, which makes placing the magnet on the opposite side possible.

10.2 Layout Examples

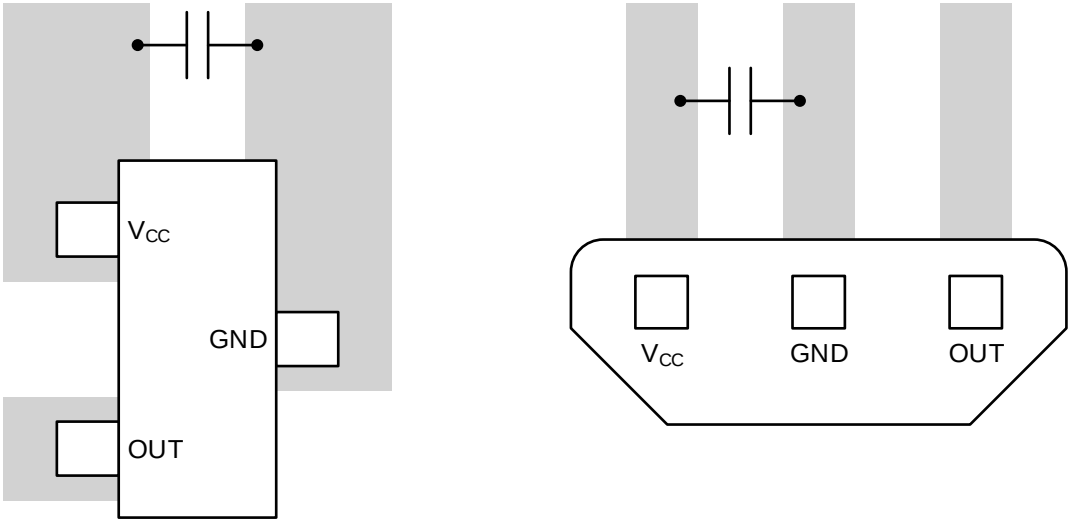

图 26. Layout Examples

11 器件和文档支持

11.1 文档支持

11.1.1 相关文档

请参阅如下相关文档：

- 德州仪器 (TI)，*《增量旋转编码器设计注意事项》应用手册*
- 德州仪器 (TI)，*《利用线性霍尔效应传感器测量角度》应用手册*
- 德州仪器 (TI)，*《使用线性霍尔效应传感器的角度测量》*

11.2 接收文档更新通知

要接收文档更新通知，请导航至 TI.com.cn 上的器件产品文件夹。单击右上角的*通知我* 进行注册，即可每周接收产品信息更改摘要。有关更改的详细信息，请查看任何已修订文档中包含的修订历史记录。

11.3 社区资源

下列链接提供到 TI 社区资源的连接。链接的内容由各个分销商"按照原样"提供。这些内容并不构成 TI 技术规范，并且不一定反映 TI 的观点；请参阅 TI 的 《使用条款》。

TI E2E™ Online Community ***TI's Engineer-to-Engineer (E2E) Community.*** Created to foster collaboration among engineers. At e2e.ti.com, you can ask questions, share knowledge, explore ideas and help solve problems with fellow engineers.

Design Support ***TI's Design Support*** Quickly find helpful E2E forums along with design support tools and contact information for technical support.

11.4 商标

E2E is a trademark of Texas Instruments.
All other trademarks are the property of their respective owners.

11.5 静电放电警告

ESD 可能会损坏该集成电路。德州仪器 (TI) 建议通过适当的预防措施处理所有集成电路。如果不遵守正确的处理措施和安装程序，可能会损坏集成电路。

ESD 的损坏小至导致微小的性能降级，大至整个器件故障。 精密的集成电路可能更容易受到损坏，这是因为非常细微的参数更改都可能会导致器件与其发布的规格不相符。

11.6 术语表

SLYZ022 — *TI 术语表*。

这份术语表列出并解释术语、缩写和定义。

12 机械、封装和可订购信息

以下页面包含机械、封装和可订购信息。这些信息是指定器件的最新可用数据。数据如有变更，恕不另行通知，且不会对此文档进行修订。如需获取此数据表的浏览器版本，请查阅左侧的导航栏。

版权 © 2018–2019, Texas Instruments Incorporated

重要声明和免责声明

TI 均以“原样”提供技术性及可靠性数据（包括数据表）、设计资源（包括参考设计）、应用或其他设计建议、网络工具、安全信息和其他资源，不保证其中不含任何瑕疵，且不做任何明示或暗示的担保，包括但不限于对适销性、适合某特定用途或不侵犯任何第三方知识产权的暗示担保。

所述资源可供专业开发人员应用TI 产品进行设计使用。您将对以下行为独自承担全部责任：(1) 针对您的应用选择合适的TI 产品；(2) 设计、验证并测试您的应用；(3) 确保您的应用满足相应标准以及任何其他安全、安保或其他要求。所述资源如有变更，恕不另行通知。TI 对您使用所述资源的授权仅限于开发资源所涉及TI 产品的相关应用。除此之外不得复制或展示所述资源，也不提供其它TI或任何第三方的知识产权授权许可。如因使用所述资源而产生任何索赔、赔偿、成本、损失及债务等，TI对此概不负责，并且您须赔偿由此对TI 及其代表造成的损害。

TI 所提供产品均受TI 的销售条款 (http://www.ti.com.cn/zh-cn/legal/termsofsale.html) 以及ti.com.cn上或随附TI产品提供的其他可适用条款的约束。TI提供所述资源并不扩展或以其他方式更改TI 针对TI 产品所发布的可适用的担保范围或担保免责声明。

邮寄地址：上海市浦东新区世纪大道 1568 号中建大厦 32 楼，邮政编码：200122
Copyright © 2019 德州仪器半导体技术（上海）有限公司

PACKAGING INFORMATION

Orderable Device	Status (1)	Package Type	Package Drawing	Pins	Package Qty	Eco Plan (2)	Lead finish/ Ball material (6)	MSL Peak Temp (3)	Op Temp (°C)	Device Marking (4/5)	Samples
DRV5056A1QDBZR	ACTIVE	SOT-23	DBZ	3	3000	RoHS & Green	SN	Level-2-260C-1 YEAR	-40 to 125	56A1	Samples
DRV5056A1QDBZT	ACTIVE	SOT-23	DBZ	3	250	RoHS & Green	SN	Level-2-260C-1 YEAR	-40 to 125	56A1	Samples
DRV5056A1QLPG	ACTIVE	TO-92	LPG	3	1000	RoHS & Green	SN	N / A for Pkg Type	-40 to 125	56A1	Samples
DRV5056A1QLPGM	ACTIVE	TO-92	LPG	3	3000	RoHS & Green	SN	N / A for Pkg Type	-40 to 125	56A1	Samples
DRV5056A2QDBZR	ACTIVE	SOT-23	DBZ	3	3000	RoHS & Green	SN	Level-2-260C-1 YEAR	-40 to 125	56A2	Samples
DRV5056A2QDBZT	ACTIVE	SOT-23	DBZ	3	250	RoHS & Green	SN	Level-2-260C-1 YEAR	-40 to 125	56A2	Samples
DRV5056A2QLPG	ACTIVE	TO-92	LPG	3	1000	RoHS & Green	SN	N / A for Pkg Type	-40 to 125	56A2	Samples
DRV5056A2QLPGM	ACTIVE	TO-92	LPG	3	3000	RoHS & Green	SN	N / A for Pkg Type	-40 to 125	56A2	Samples
DRV5056A3QDBZR	ACTIVE	SOT-23	DBZ	3	3000	RoHS & Green	SN	Level-2-260C-1 YEAR	-40 to 125	56A3	Samples
DRV5056A3QDBZT	ACTIVE	SOT-23	DBZ	3	250	RoHS & Green	SN	Level-2-260C-1 YEAR	-40 to 125	56A3	Samples
DRV5056A3QLPG	ACTIVE	TO-92	LPG	3	1000	RoHS & Green	SN	N / A for Pkg Type	-40 to 125	56A3	Samples
DRV5056A3QLPGM	ACTIVE	TO-92	LPG	3	3000	RoHS & Green	SN	N / A for Pkg Type	-40 to 125	56A3	Samples
DRV5056A4QDBZR	ACTIVE	SOT-23	DBZ	3	3000	RoHS & Green	SN	Level-2-260C-1 YEAR	-40 to 125	56A4	Samples
DRV5056A4QDBZT	ACTIVE	SOT-23	DBZ	3	250	RoHS & Green	SN	Level-2-260C-1 YEAR	-40 to 125	56A4	Samples
DRV5056A4QLPG	ACTIVE	TO-92	LPG	3	1000	RoHS & Green	SN	N / A for Pkg Type	-40 to 125	56A4	Samples
DRV5056A4QLPGM	ACTIVE	TO-92	LPG	3	3000	RoHS & Green	SN	N / A for Pkg Type	-40 to 125	56A4	Samples
DRV5056A6QDBZR	ACTIVE	SOT-23	DBZ	3	3000	RoHS & Green	SN	Level-2-260C-1 YEAR	-40 to 125	56A6	Samples
DRV5056A6QDBZT	ACTIVE	SOT-23	DBZ	3	250	RoHS & Green	SN	Level-2-260C-1 YEAR	-40 to 125	56A6	Samples
DRV5056Z1QDBZR	ACTIVE	SOT-23	DBZ	3	3000	RoHS & Green	SN	Level-2-260C-1 YEAR	-40 to 125	56Z1	Samples
DRV5056Z1QDBZT	ACTIVE	SOT-23	DBZ	3	250	RoHS & Green	SN	Level-2-260C-1 YEAR	-40 to 125	56Z1	Samples

Orderable Device	Status (1)	Package Type	Package Drawing	Pins	Package Qty	Eco Plan (2)	Lead finish/ Ball material (6)	MSL Peak Temp (3)	Op Temp (°C)	Device Marking (4/5)	Samples
DRV5056Z2QDBZR	ACTIVE	SOT-23	DBZ	3	3000	RoHS & Green	SN	Level-2-260C-1 YEAR	-40 to 125	56Z2	Samples
DRV5056Z2QDBZT	ACTIVE	SOT-23	DBZ	3	250	RoHS & Green	SN	Level-2-260C-1 YEAR	-40 to 125	56Z2	Samples
DRV5056Z3QDBZR	ACTIVE	SOT-23	DBZ	3	3000	RoHS & Green	SN	Level-2-260C-1 YEAR	-40 to 125	56Z3	Samples
DRV5056Z3QDBZT	ACTIVE	SOT-23	DBZ	3	250	RoHS & Green	SN	Level-2-260C-1 YEAR	-40 to 125	56Z3	Samples
DRV5056Z4QDBZR	ACTIVE	SOT-23	DBZ	3	3000	RoHS & Green	SN	Level-2-260C-1 YEAR	-40 to 125	56Z4	Samples
DRV5056Z4QDBZT	ACTIVE	SOT-23	DBZ	3	250	RoHS & Green	SN	Level-2-260C-1 YEAR	-40 to 125	56Z4	Samples

(1) The marketing status values are defined as follows:
ACTIVE: Product device recommended for new designs.
LIFEBUY: TI has announced that the device will be discontinued, and a lifetime-buy period is in effect.
NRND: Not recommended for new designs. Device is in production to support existing customers, but TI does not recommend using this part in a new design.
PREVIEW: Device has been announced but is not in production. Samples may or may not be available.
OBSOLETE: TI has discontinued the production of the device.

(2) **RoHS:** TI defines "RoHS" to mean semiconductor products that are compliant with the current EU RoHS requirements for all 10 RoHS substances, including the requirement that RoHS substance do not exceed 0.1% by weight in homogeneous materials. Where designed to be soldered at high temperatures, "RoHS" products are suitable for use in specified lead-free processes. TI may reference these types of products as "Pb-Free".
RoHS Exempt: TI defines "RoHS Exempt" to mean products that contain lead but are compliant with EU RoHS pursuant to a specific EU RoHS exemption.
Green: TI defines "Green" to mean the content of Chlorine (Cl) and Bromine (Br) based flame retardants meet JS709B low halogen requirements of <=1000ppm threshold. Antimony trioxide based flame retardants must also meet the <=1000ppm threshold requirement.

(3) MSL, Peak Temp. - The Moisture Sensitivity Level rating according to the JEDEC industry standard classifications, and peak solder temperature.

(4) There may be additional marking, which relates to the logo, the lot trace code information, or the environmental category on the device.

(5) Multiple Device Markings will be inside parentheses. Only one Device Marking contained in parentheses and separated by a "~" will appear on a device. If a line is indented then it is a continuation of the previous line and the two combined represent the entire Device Marking for that device.

(6) Lead finish/Ball material - Orderable Devices may have multiple material finish options. Finish options are separated by a vertical ruled line. Lead finish/Ball material values may wrap to two lines if the finish value exceeds the maximum column width.

Important Information and Disclaimer: The information provided on this page represents TI's knowledge and belief as of the date that it is provided. TI bases its knowledge and belief on information provided by third parties, and makes no representation or warranty as to the accuracy of such information. Efforts are underway to better integrate information from third parties. TI has taken and continues to take reasonable steps to provide representative and accurate information but may not have conducted destructive testing or chemical analysis on incoming materials and chemicals. TI and TI suppliers consider certain information to be proprietary, and thus CAS numbers and other limited information may not be available for release.

In no event shall TI's liability arising out of such information exceed the total purchase price of the TI part(s) at issue in this document sold by TI to Customer on an annual basis.

TAPE AND REEL INFORMATION

REEL DIMENSIONS

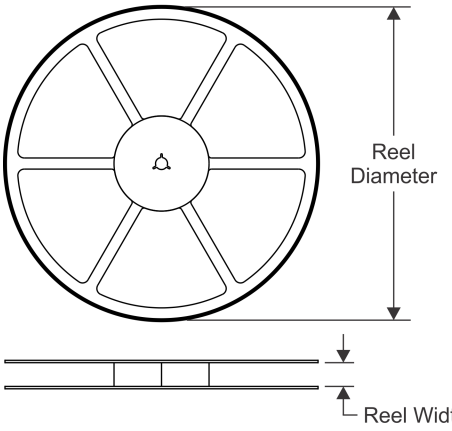

TAPE DIMENSIONS

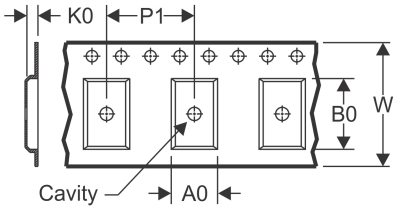

A0	Dimension designed to accommodate the component width
B0	Dimension designed to accommodate the component length
K0	Dimension designed to accommodate the component thickness
W	Overall width of the carrier tape
P1	Pitch between successive cavity centers

QUADRANT ASSIGNMENTS FOR PIN 1 ORIENTATION IN TAPE

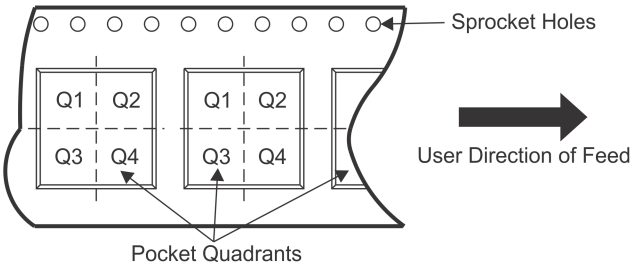

*All dimensions are nominal

Device	Package Type	Package Drawing	Pins	SPQ	Reel Diameter (mm)	Reel Width W1 (mm)	A0 (mm)	B0 (mm)	K0 (mm)	P1 (mm)	W (mm)	Pin1 Quadrant
DRV5056A1QDBZR	SOT-23	DBZ	3	3000	180.0	8.4	3.15	2.77	1.22	4.0	8.0	Q3
DRV5056A1QDBZT	SOT-23	DBZ	3	250	180.0	8.4	3.15	2.77	1.22	4.0	8.0	Q3
DRV5056A2QDBZR	SOT-23	DBZ	3	3000	180.0	8.4	3.15	2.77	1.22	4.0	8.0	Q3
DRV5056A2QDBZT	SOT-23	DBZ	3	250	180.0	8.4	3.15	2.77	1.22	4.0	8.0	Q3
DRV5056A3QDBZR	SOT-23	DBZ	3	3000	180.0	8.4	3.15	2.77	1.22	4.0	8.0	Q3
DRV5056A3QDBZT	SOT-23	DBZ	3	250	180.0	8.4	3.15	2.77	1.22	4.0	8.0	Q3
DRV5056A4QDBZR	SOT-23	DBZ	3	3000	180.0	8.4	3.15	2.77	1.22	4.0	8.0	Q3
DRV5056A4QDBZT	SOT-23	DBZ	3	250	180.0	8.4	3.15	2.77	1.22	4.0	8.0	Q3
DRV5056A6QDBZR	SOT-23	DBZ	3	3000	180.0	8.4	3.15	2.77	1.22	4.0	8.0	Q3
DRV5056A6QDBZT	SOT-23	DBZ	3	250	180.0	8.4	3.15	2.77	1.22	4.0	8.0	Q3
DRV5056Z1QDBZR	SOT-23	DBZ	3	3000	180.0	8.4	3.15	2.77	1.22	4.0	8.0	Q3
DRV5056Z1QDBZT	SOT-23	DBZ	3	250	180.0	8.4	3.15	2.77	1.22	4.0	8.0	Q3
DRV5056Z2QDBZR	SOT-23	DBZ	3	3000	180.0	8.4	3.15	2.77	1.22	4.0	8.0	Q3
DRV5056Z2QDBZT	SOT-23	DBZ	3	250	180.0	8.4	3.15	2.77	1.22	4.0	8.0	Q3
DRV5056Z3QDBZR	SOT-23	DBZ	3	3000	180.0	8.4	3.15	2.77	1.22	4.0	8.0	Q3
DRV5056Z3QDBZT	SOT-23	DBZ	3	250	180.0	8.4	3.15	2.77	1.22	4.0	8.0	Q3
DRV5056Z4QDBZR	SOT-23	DBZ	3	3000	180.0	8.4	3.15	2.77	1.22	4.0	8.0	Q3
DRV5056Z4QDBZT	SOT-23	DBZ	3	250	180.0	8.4	3.15	2.77	1.22	4.0	8.0	Q3

TAPE AND REEL BOX DIMENSIONS

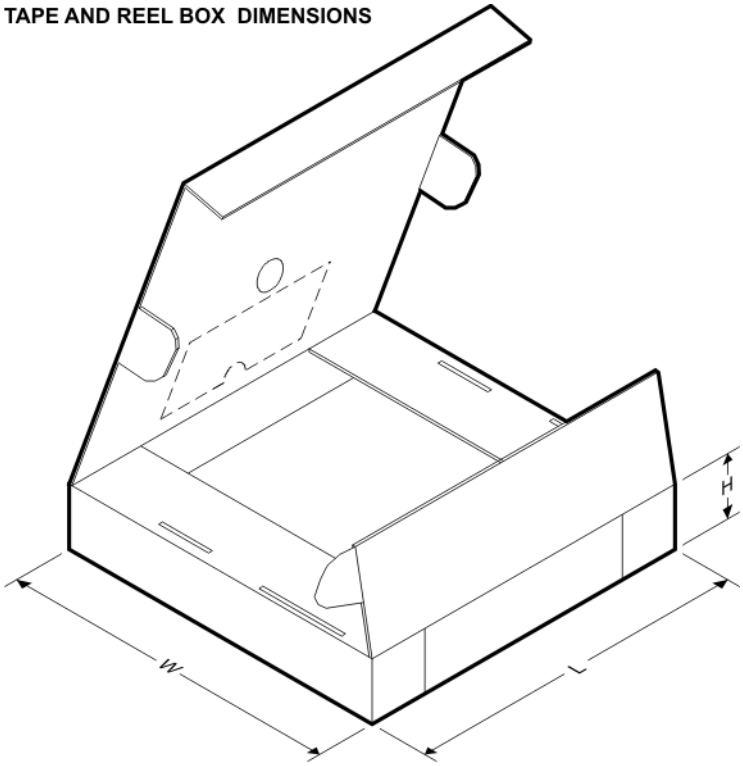

*All dimensions are nominal

Device	Package Type	Package Drawing	Pins	SPQ	Length (mm)	Width (mm)	Height (mm)
DRV5056A1QDBZR	SOT-23	DBZ	3	3000	213.0	191.0	35.0
DRV5056A1QDBZT	SOT-23	DBZ	3	250	213.0	191.0	35.0
DRV5056A2QDBZR	SOT-23	DBZ	3	3000	213.0	191.0	35.0
DRV5056A2QDBZT	SOT-23	DBZ	3	250	213.0	191.0	35.0
DRV5056A3QDBZR	SOT-23	DBZ	3	3000	213.0	191.0	35.0
DRV5056A3QDBZT	SOT-23	DBZ	3	250	213.0	191.0	35.0
DRV5056A4QDBZR	SOT-23	DBZ	3	3000	213.0	191.0	35.0
DRV5056A4QDBZT	SOT-23	DBZ	3	250	213.0	191.0	35.0
DRV5056A6QDBZR	SOT-23	DBZ	3	3000	213.0	191.0	35.0
DRV5056A6QDBZT	SOT-23	DBZ	3	250	213.0	191.0	35.0
DRV5056Z1QDBZR	SOT-23	DBZ	3	3000	213.0	191.0	35.0
DRV5056Z1QDBZT	SOT-23	DBZ	3	250	213.0	191.0	35.0
DRV5056Z2QDBZR	SOT-23	DBZ	3	3000	213.0	191.0	35.0
DRV5056Z2QDBZT	SOT-23	DBZ	3	250	213.0	191.0	35.0
DRV5056Z3QDBZR	SOT-23	DBZ	3	3000	213.0	191.0	35.0
DRV5056Z3QDBZT	SOT-23	DBZ	3	250	213.0	191.0	35.0
DRV5056Z4QDBZR	SOT-23	DBZ	3	3000	213.0	191.0	35.0
DRV5056Z4QDBZT	SOT-23	DBZ	3	250	213.0	191.0	35.0

PACKAGE OUTLINE

LPG0003A

TO-92 - 5.05 mm max height

TRANSISTOR OUTLINE

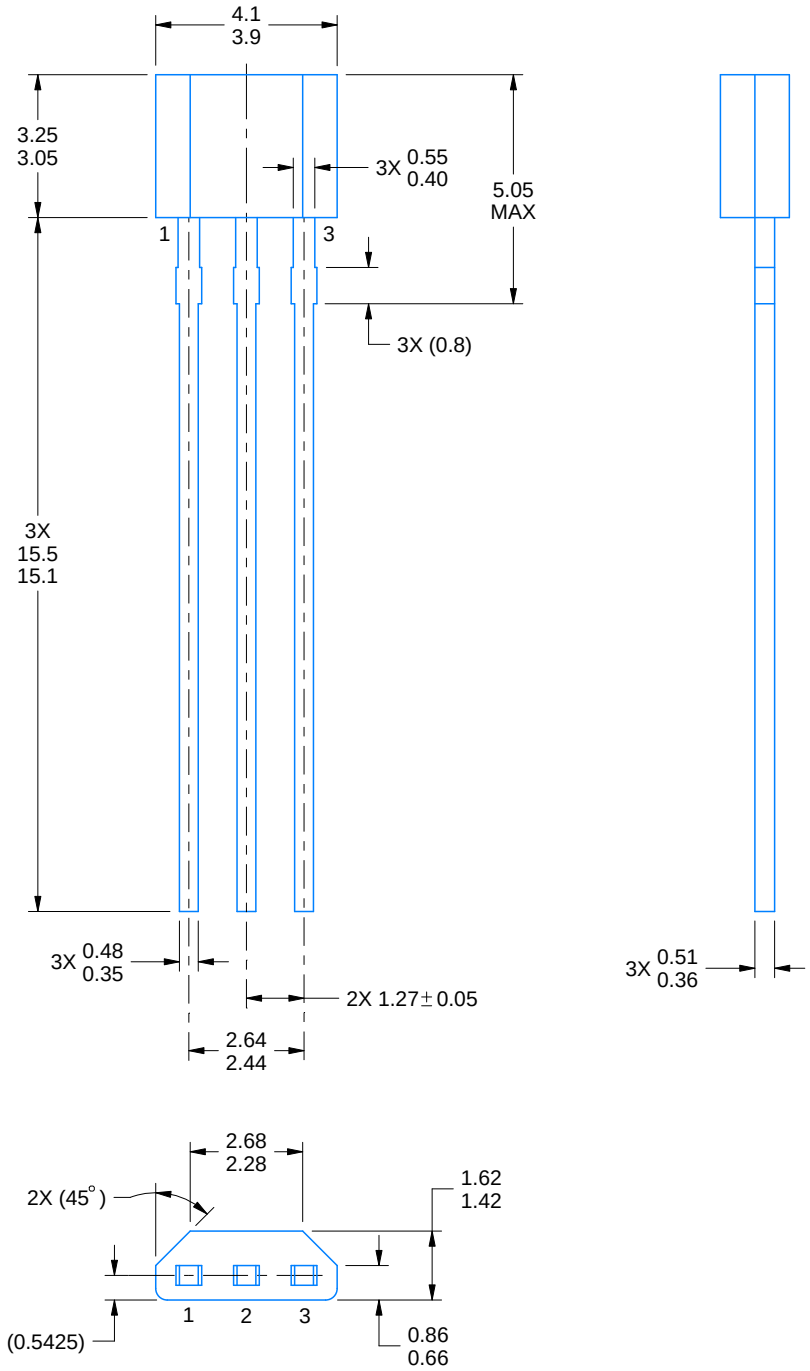

4221343/C 01/2018

NOTES:

1. All linear dimensions are in millimeters. Any dimensions in parenthesis are for reference only. Dimensioning and tolerancing per ASME Y14.5M.
2. This drawing is subject to change without notice.

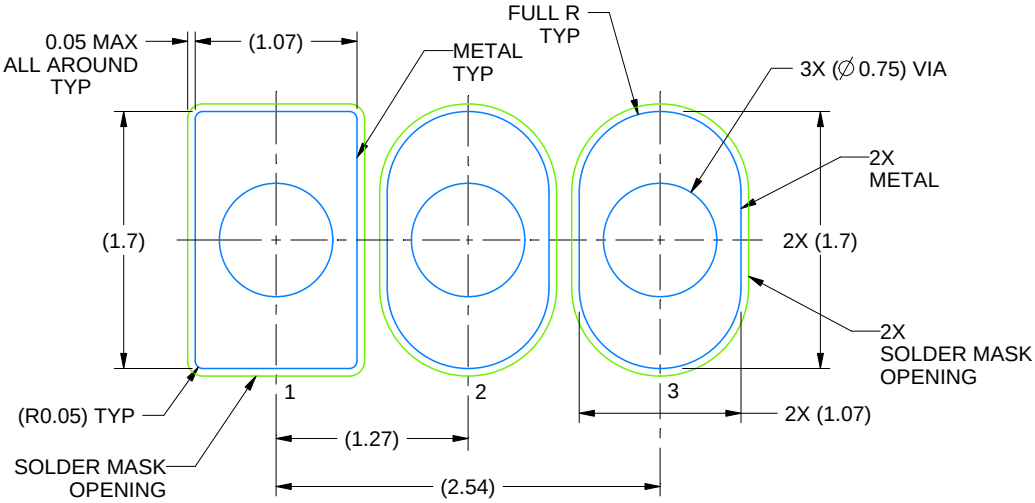

LAND PATTERN EXAMPLE
NON-SOLDER MASK DEFINED
SCALE:20X

4221343/C 01/2018

TRANSISTOR OUTLINE

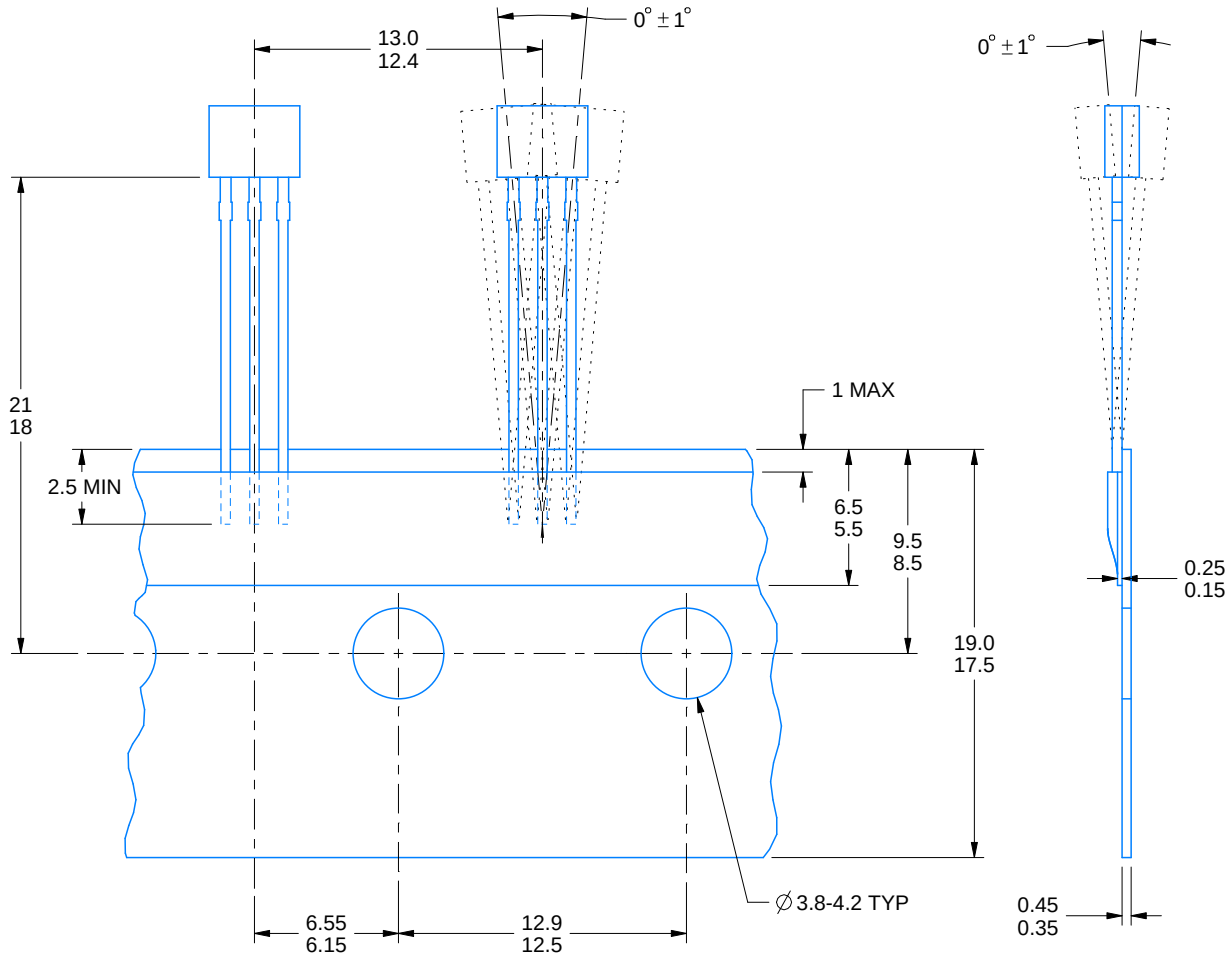

4221343/C 01/2018

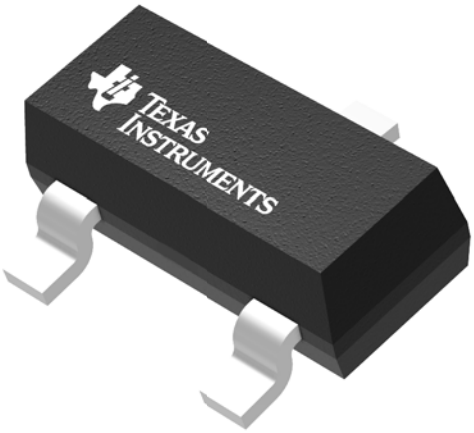

Images above are just a representation of the package family, actual package may vary.
Refer to the product data sheet for package details.

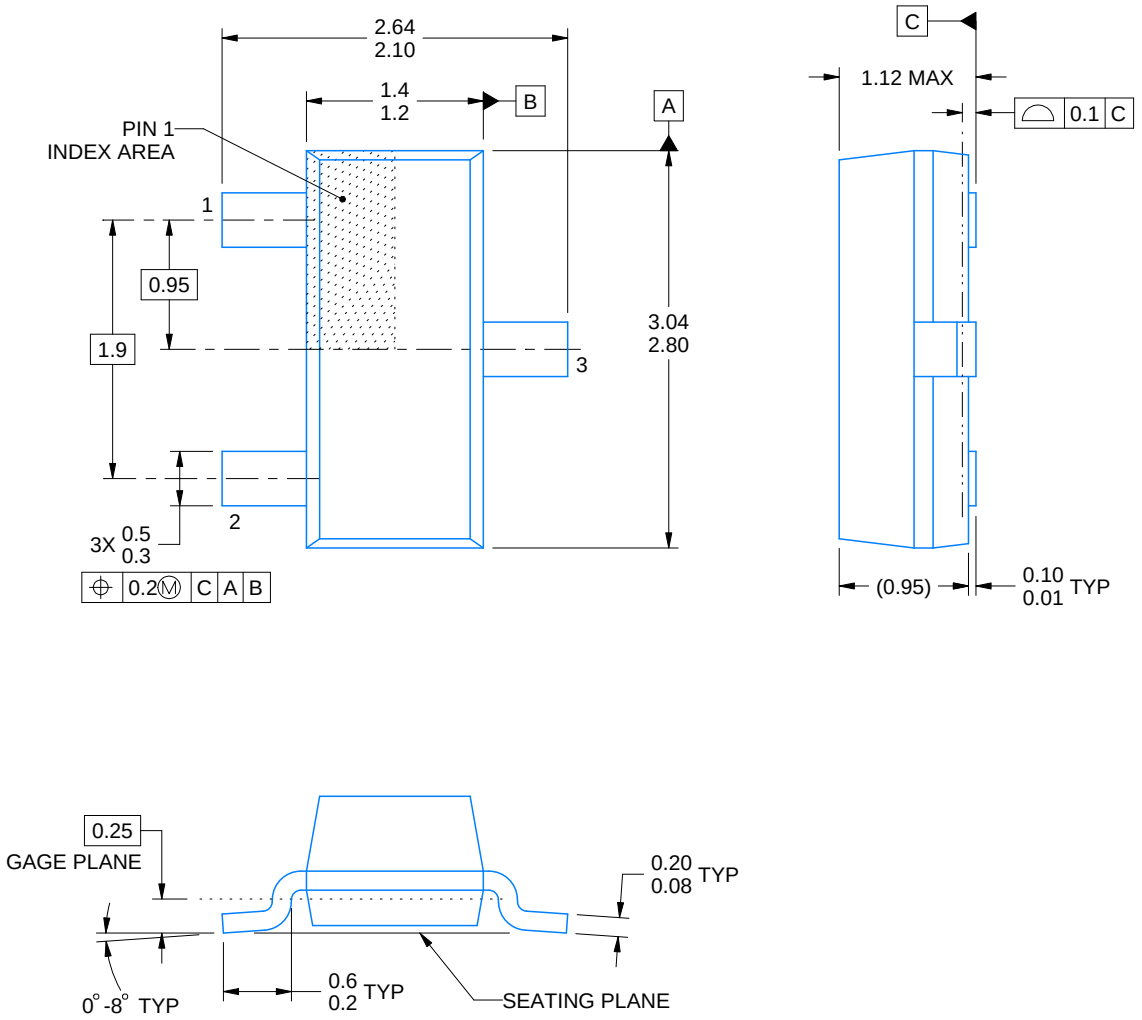

4214838/C 04/2017

NOTES:

1. All linear dimensions are in millimeters. Any dimensions in parenthesis are for reference only. Dimensioning and tolerancing per ASME Y14.5M.
2. This drawing is subject to change without notice.
3. Reference JEDEC registration TO-236, except minimum foot length.

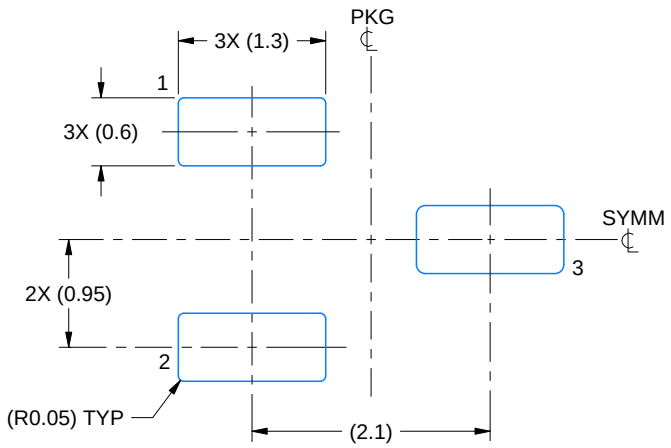

LAND PATTERN EXAMPLE
SCALE:15X

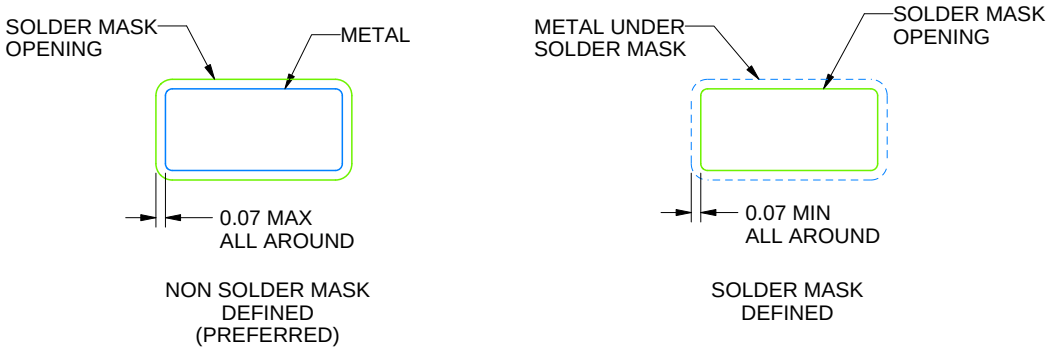

SOLDER MASK DETAILS

4214838/C 04/2017

NOTES: (continued)

4. Publication IPC-7351 may have alternate designs.
5. Solder mask tolerances between and around signal pads can vary based on board fabrication site.

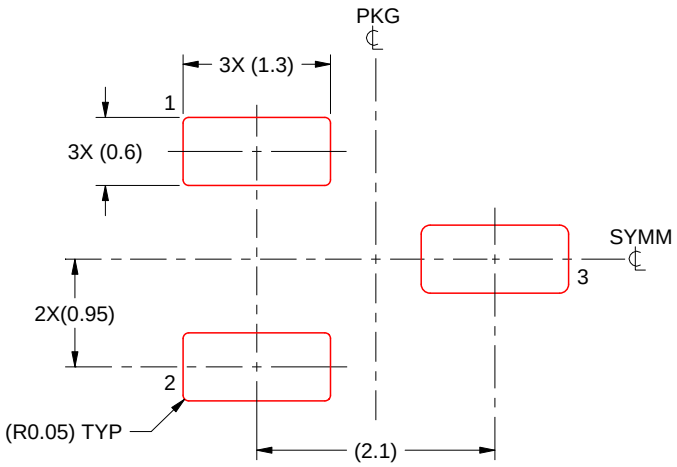

SOLDER PASTE EXAMPLE
BASED ON 0.125 THICK STENCIL
SCALE:15X

4214838/C 04/2017

NOTES: (continued)

6. Laser cutting apertures with trapezoidal walls and rounded corners may offer better paste release. IPC-7525 may have alternate design recommendations.
7. Board assembly site may have different recommendations for stencil design.

重要声明和免责声明

TI 均以“原样”提供技术性及可靠性数据（包括数据表）、设计资源（包括参考设计）、应用或其他设计建议、网络工具、安全信息和其他资源，不保证其中不含任何瑕疵，且不做任何明示或暗示的担保，包括但不限于对适销性、适合某特定用途或不侵犯任何第三方知识产权的暗示担保。

所述资源可供专业开发人员应用TI 产品进行设计使用。您将对以下行为独自承担全部责任：(1) 针对您的应用选择合适的TI 产品；(2) 设计、验证并测试您的应用；(3) 确保您的应用满足相应标准以及任何其他安全、安保或其他要求。所述资源如有变更，恕不另行通知。TI 对您使用所述资源的授权仅限于开发资源所涉及TI 产品的相关应用。除此之外不得复制或展示所述资源，也不提供其它TI或任何第三方的知识产权授权许可。如因使用所述资源而产生任何索赔、赔偿、成本、损失及债务等，TI对此概不负责，并且您须赔偿由此对TI 及其代表造成的损害。

TI 所提供产品均受TI 的销售条款 (http://www.ti.com.cn/zh-cn/legal/termsofsale.html) 以及ti.com.cn上或随附TI产品提供的其他可适用条款的约束。TI提供所述资源并不扩展或以其他方式更改TI 针对TI 产品所发布的可适用的担保范围或担保免责声明。

邮寄地址：上海市浦东新区世纪大道 1568 号中建大厦 32 楼，邮政编码：200122
Copyright © 2020 德州仪器半导体技术（上海）有限公司