# LM1575/LM2575/LM2575HV SIMPLE SWITCHER® 1A Step-Down Voltage Regulator

**Check for Samples: LM1575, LM2575-N, LM2575HV**

## FEATURES

- **3.3V, 5V, 12V, 15V, and Adjustable Output Versions**
- **Adjustable Version Output Voltage Range,**
  - **1.23V to 37V (57V for HV Version) ±4% Max Over**
  - **Line and Load Conditions**
- **Specified 1A Output Current**
- **Wide Input Voltage Range, 40V up to 60V for HV Version**
- **Requires Only 4 External Components**
- **52 kHz Fixed Frequency Internal Oscillator**
- **TTL Shutdown Capability, Low Power Standby Mode**
- **High Efficiency**
- **Uses Readily Available Standard Inductors**
- **Thermal Shutdown and Current Limit Protection**
- **P+ Product Enhancement Tested**

## APPLICATIONS

- **Simple High-Efficiency Step-Down (Buck) Regulator**
- **Efficient Pre-Regulator for Linear Regulators**
- **On-Card Switching Regulators**
- **Positive to Negative Converter (Buck-Boost)**

## DESCRIPTION

The LM2575 series of regulators are monolithic integrated circuits that provide all the active functions for a step-down (buck) switching regulator, capable of driving a 1A load with excellent line and load regulation. These devices are available in fixed output voltages of 3.3V, 5V, 12V, 15V, and an adjustable output version.

Requiring a minimum number of external components, these regulators are simple to use and include internal frequency compensation and a fixed-frequency oscillator.

The LM2575 series offers a high-efficiency replacement for popular three-terminal linear regulators. It substantially reduces the size of the heat sink, and in many cases no heat sink is required.

A standard series of inductors optimized for use with the LM2575 are available from several different manufacturers. This feature greatly simplifies the design of switch-mode power supplies.

Other features include a specified ±4% tolerance on output voltage within specified input voltages and output load conditions, and ±10% on the oscillator frequency. External shutdown is included, featuring 50 μA (typical) standby current. The output switch includes cycle-by-cycle current limiting, as well as thermal shutdown for full protection under fault conditions.

### Typical Application

(Fixed Output Voltage Versions)

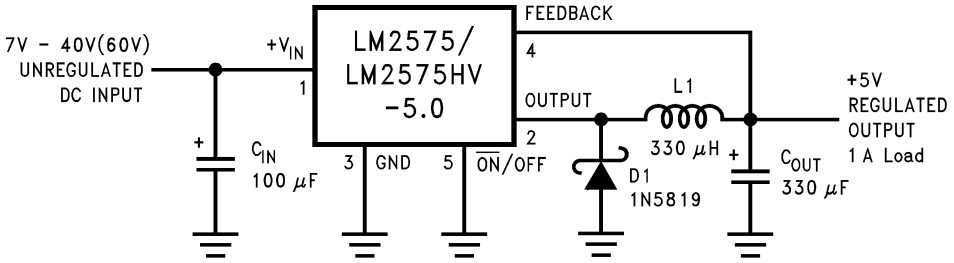


Pin numbers are for the TO-220 package.

Please be aware that an important notice concerning availability, standard warranty, and use in critical applications of Texas Instruments semiconductor products and disclaimers thereto appears at the end of this data sheet.

SIMPLE SWITCHER is a registered trademark of Texas Instruments.
All other trademarks are the property of their respective owners.

PRODUCTION DATA information is current as of publication date. Products conform to specifications per the terms of the Texas Instruments standard warranty. Production processing does not necessarily include testing of all parameters.

Copyright © 1999–2013, Texas Instruments Incorporated

## Block Diagram and Typical Application

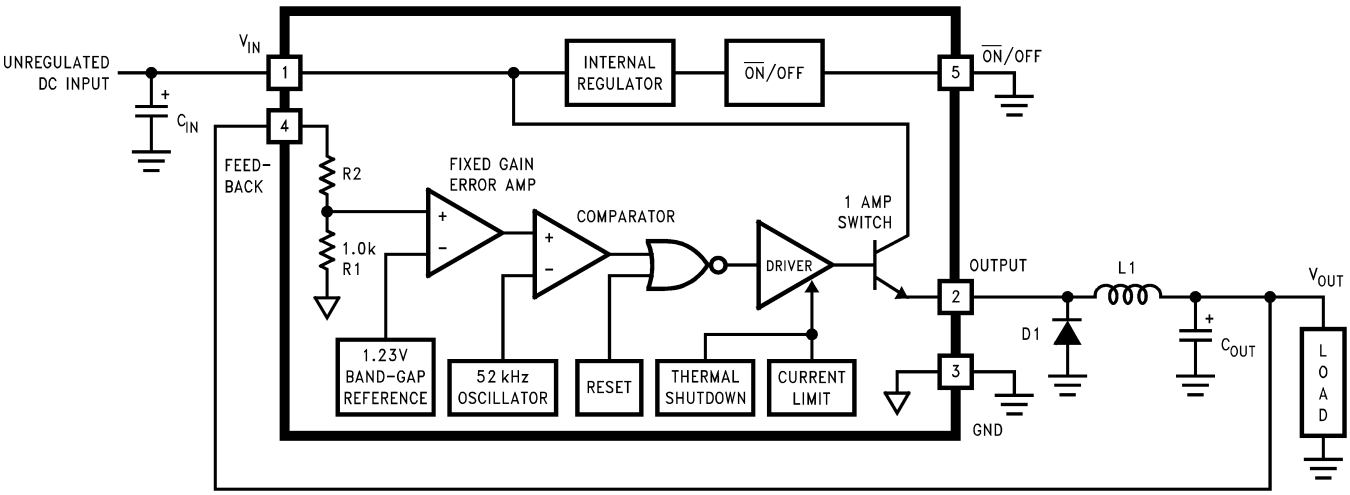


3.3V, R2 = 1.7k
5V, R2 = 3.1k
12V, R2 = 8.84k
15V, R2 = 11.3k
For ADJ. Version
R1 = Open, R2 = 0Ω
Pin numbers are for the TO-220 package.

**Figure 1.**


Copyright © 1999–2013, Texas Instruments Incorporated

## Connection Diagrams

(XX indicates output voltage option.)

**Top View**

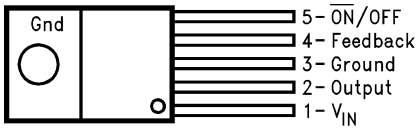


**Figure 2. Straight Leads 5-Lead TO-220 Package LM2575T-XX or LM2575HVT-XX See Package Number KC0005A**

**Top View**

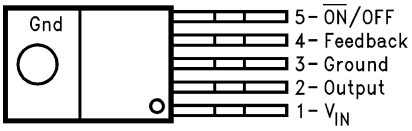


**Figure 3. Bent, Staggered Leads 5-Lead TO-220 Package See Package Number NDH0005D**

**Side View**

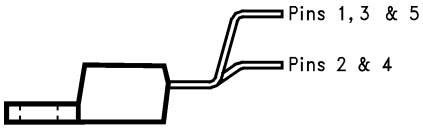


**Figure 4. LM2575T-XX Flow LB03 or LM2575HVT-XX Flow LB03 See Package Number NDH0005D**

**Top View**

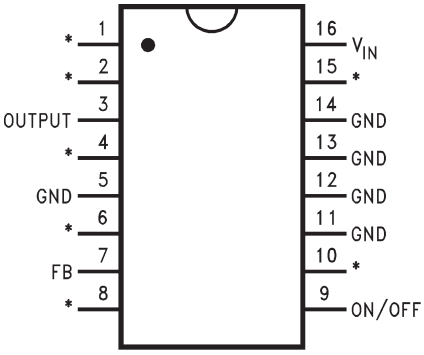


*No Internal Connection

**Figure 5. 16-Lead CDIP and PDIP Packages LM2575N-XX or LM2575HVN-XX LM1575J-XX-QML See Package Numbers NFE0016A and NBG**

**Top View**

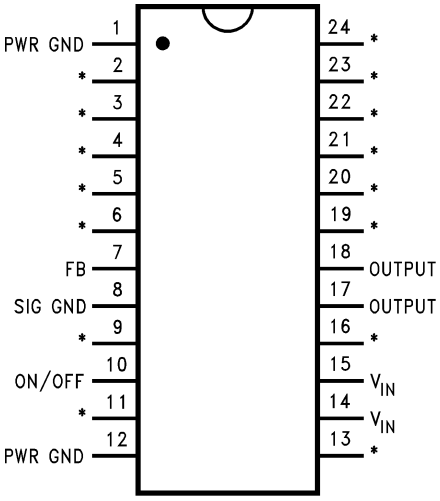


*No Internal Connection

**Figure 6. 24-Lead Surface Mount SOIC Package LM2575M-XX or LM2575HVM-XX See Package Number DW0024B**

**Top View**

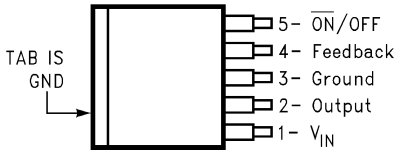


**Figure 7. DDPAK/TO-263 Package 5-Lead Surface-Mount Package See Package Number KTT0005B**

**Side View**

**Figure 8. LM2575S-XX or LM2575HVS-XX See Package Number KTT0005B**

These devices have limited built-in ESD protection. The leads should be shorted together or the device placed in conductive foam during storage or handling to prevent electrostatic damage to the MOS gates.

## ABSOLUTE MAXIMUM RATINGS (1)(2)(3)

| | | |
|---|---|---|
| Maximum Supply Voltage | LM1575/LM2575 | 45V |
| | LM2575HV | 63V |
| $\overline{ON}$ /OFF Pin Input Voltage | | −0.3V ≤ V ≤ +$V_{IN}$ |
| Output Voltage to Ground | (Steady State) | −1V |
| Power Dissipation | | Internally Limited |
| Storage Temperature Range | | −65°C to +150°C |
| Maximum Junction Temperature | | 150°C |
| Minimum ESD Rating | (C = 100 pF, R = 1.5 kΩ) | 2 kV |
| Lead Temperature | (Soldering, 10 sec.) | 260°C |

(1) Absolute Maximum Ratings indicate limits beyond which damage to the device may occur. Operating Ratings indicate conditions for which the device is intended to be functional, but do not ensure specific performance limits. For specified specifications and test conditions, see Electrical Characteristics.
(2) If Military/Aerospace specified devices are required, please contact the TI Sales Office/ Distributors for availability and specifications.
(3) Refer to RETS LM1575J for current revision of military RETS/SMD.

## OPERATING RATINGS

| | | |
|---|---|---|
| Temperature Range | LM1575 | −55°C ≤ $T_J$ ≤ +150°C |
| | LM2575/LM2575HV | −40°C ≤ $T_J$ ≤ +125°C |
| Supply Voltage | LM1575/LM2575 | 40V |
| | LM2575HV | 60V |

## ELECTRICAL CHARACTERISTICS LM1575-3.3, LM2575-3.3, LM2575HV-3.3

Specifications with standard type face are for $T_J$ = 25°C, and those with **boldface type** apply over **full Operating Temperature Range** .

| Symbol | Parameter | Conditions | Typ | LM1575-3.3 | LM2575-3.3 LM2575HV-3.3 | Units (Limits) |
|---|---|---|---|---|---|---|
| | | | | Limit (1) | Limit (2) | |
| **SYSTEM PARAMETERS** Test Circuit Figure 25 and Figure 26 (3) | | | | | | |
| $V_{OUT}$ | Output Voltage | $V_{IN}$ = 12V, $I_{LOAD}$ = 0.2A<br>Circuit Figure 25 and Figure 26 | 3.3 | <br>3.267<br>3.333 | <br>3.234<br>3.366 | V<br>V(Min)<br>V(Max) |
| $V_{OUT}$ | Output Voltage LM1575/LM2575 | 4.75V ≤ $V_{IN}$ ≤ 40V, 0.2A ≤ $I_{LOAD}$ ≤ 1A<br>Circuit Figure 25 and Figure 26 | 3.3 | <br>3.200/**3.168**<br>3.400/**3.432** | <br>3.168/**3.135**<br>3.432/**3.465** | V<br>V(Min)<br>V(Max) |
| $V_{OUT}$ | Output Voltage LM2575HV | 4.75V ≤ $V_{IN}$ ≤ 60V, 0.2A ≤ $I_{LOAD}$ ≤ 1A<br>Circuit Figure 25 and Figure 26 | 3.3 | <br>3.200/**3.168**<br>3.416/**3.450** | <br>3.168/**3.135**<br>3.450/**3.482** | V<br>V(Min)<br>V(Max) |
| η | Efficiency | $V_{IN}$ = 12V, $I_{LOAD}$ = 1A | 75 | | | % |

(1) All limits specified at room temperature (standard type face) and at **temperature extremes (bold type face)**. All limits are used to calculate Average Outgoing Quality Level, and all are 100% production tested.
(2) All limits specified at room temperature (standard type face) and at **temperature extremes (bold type face)**. All room temperature limits are 100% production tested. All limits at **temperature extremes** are specified via correlation using standard Statistical Quality Control (SQC) methods.
(3) External components such as the catch diode, inductor, input and output capacitors can affect switching regulator system performance. When the LM1575/LM2575 is used as shown in the test circuit Figure 25 and Figure 26, system performance will be as shown in system parameters of Electrical Characteristics.


Copyright © 1999–2013, Texas Instruments Incorporated

## ELECTRICAL CHARACTERISTICS LM1575-5.0, LM2575-5.0, LM2575HV-5.0

Specifications with standard type face are for $T_J$ = 25°C, and those with **boldface type** apply over **full Operating Temperature Range**.

| Symbol | Parameter | Conditions | Typ | LM1575-5.0 | LM2575-5.0<br>LM2575HV-5.0 | Units (Limits) |
|---|---|---|---|---|---|---|
| | | | | Limit (1) | Limit (2) | |
| **SYSTEM PARAMETERS** Test Circuit Figure 25 and Figure 26 (3) | | | | | | |
| $V_{OUT}$ | Output Voltage | $V_{IN}$ = 12V, $I_{LOAD}$ = 0.2A<br>Circuit Figure 25 and Figure 26 | 5.0 | <br>4.950<br>5.050 | <br>4.900<br>5.100 | V<br>V(Min)<br>V(Max) |
| $V_{OUT}$ | Output Voltage<br>LM1575/LM2575 | 0.2A ≤ $I_{LOAD}$ ≤ 1A,<br>8V ≤ $V_{IN}$ ≤ 40V<br>Circuit Figure 25 and Figure 26 | 5.0 | <br>4.850/**4.800**<br>5.150/**5.200** | <br>4.800/**4.750**<br>5.200/**5.250** | V<br>V(Min)<br>V(Max) |
| $V_{OUT}$ | Output Voltage<br>LM2575HV | 0.2A ≤ $I_{LOAD}$ ≤ 1A,<br>8V ≤ $V_{IN}$ ≤ 60V<br>Circuit Figure 25 and Figure 26 | 5.0 | <br>4.850/**4.800**<br>5.175/**5.225** | <br>4.800/**4.750**<br>5.225/**5.275** | V<br>V(Min)<br>V(Max) |
| η | Efficiency | $V_{IN}$ = 12V, $I_{LOAD}$ = 1A | 77 | | | % |

(1) All limits specified at room temperature (standard type face) and at **temperature extremes (bold type face)**. All limits are used to calculate Average Outgoing Quality Level, and all are 100% production tested.
(2) All limits specified at room temperature (standard type face) and at **temperature extremes (bold type face)**. All room temperature limits are 100% production tested. All limits at **temperature extremes** are specified via correlation using standard Statistical Quality Control (SQC) methods.
(3) External components such as the catch diode, inductor, input and output capacitors can affect switching regulator system performance. When the LM1575/LM2575 is used as shown in the test circuit Figure 25 and Figure 26, system performance will be as shown in system parameters of Electrical Characteristics.

## ELECTRICAL CHARACTERISTICS LM1575-12, LM2575-12, LM2575HV-12

Specifications with standard type face are for $T_J$ = 25°C, and those with **boldface type** apply over **full Operating Temperature Range** .

| Symbol | Parameter | Conditions | Typ | LM1575-12 | LM2575-12<br>LM2575HV-12 | Units (Limits) |
|---|---|---|---|---|---|---|
| | | | | Limit (1) | Limit (2) | |
| **SYSTEM PARAMETERS** Test Circuit Figure 25 and Figure 26 (3) | | | | | | |
| $V_{OUT}$ | Output Voltage | $V_{IN}$ = 25V, $I_{LOAD}$ = 0.2A<br>Circuit Figure 25 and Figure 26 | 12 | <br>11.88<br>12.12 | <br>11.76<br>12.24 | V<br>V(Min)<br>V(Max) |
| $V_{OUT}$ | Output Voltage<br>LM1575/LM2575 | 0.2A ≤ $I_{LOAD}$ ≤ 1A,<br>15V ≤ $V_{IN}$ ≤ 40V<br>Circuit Figure 25 and Figure 26 | 12 | <br>11.64/**11.52**<br>12.36/**12.48** | <br>11.52/**11.40**<br>12.48/**12.60** | V<br>V(Min)<br>V(Max) |
| $V_{OUT}$ | Output Voltage<br>LM2575HV | 0.2A ≤ $I_{LOAD}$ ≤ 1A,<br>15V ≤ $V_{IN}$ ≤ 60V<br>Circuit Figure 25 and Figure 26 | 12 | <br>11.64/**11.52**<br>12.42/**12.54** | <br>11.52/**11.40**<br>12.54/**12.66** | V<br>V(Min)<br>V(Max) |
| η | Efficiency | $V_{IN}$ = 15V, $I_{LOAD}$ = 1A | 88 | | | % |

(1) All limits specified at room temperature (standard type face) and at **temperature extremes (bold type face)**. All limits are used to calculate Average Outgoing Quality Level, and all are 100% production tested.
(2) All limits specified at room temperature (standard type face) and at **temperature extremes (bold type face)**. All room temperature limits are 100% production tested. All limits at **temperature extremes** are specified via correlation using standard Statistical Quality Control (SQC) methods.
(3) External components such as the catch diode, inductor, input and output capacitors can affect switching regulator system performance. When the LM1575/LM2575 is used as shown in the test circuit Figure 25 and Figure 26, system performance will be as shown in system parameters of Electrical Characteristics.

Copyright © 1999–2013, Texas Instruments Incorporated

## ELECTRICAL CHARACTERISTICS LM1575-15, LM2575-15, LM2575HV-15

Specifications with standard type face are for $T_J$ = 25°C, and those with **boldface type** apply over **full Operating Temperature Range** .

| Symbol | Parameter | Conditions | Typ | LM1575-15 Limit (1) | LM2575-15 LM2575HV-15 Limit (2) | Units (Limits) |
|---|---|---|---|---|---|---|
| **SYSTEM PARAMETERS** Test Circuit Figure 25 and Figure 26 (3) | | | | | | |
| $V_{OUT}$ | Output Voltage | $V_{IN}$ = 30V, $I_{LOAD}$ = 0.2A<br>Circuit Figure 25 and Figure 26 | 15 | <br>14.85<br>15.15 | <br>14.70<br>15.30 | V<br>V(Min)<br>V(Max) |
| $V_{OUT}$ | Output Voltage LM1575/LM2575 | 0.2A ≤ $I_{LOAD}$ ≤ 1A,<br>18V ≤ $V_{IN}$ ≤ 40V<br>Circuit Figure 25 and Figure 26 | 15 | <br>14.55/**14.40**<br>15.45/**15.60** | <br>14.40/**14.25**<br>15.60/**15.75** | V<br>V(Min)<br>V(Max) |
| $V_{OUT}$ | Output Voltage LM2575HV | 0.2A ≤ $I_{LOAD}$ ≤ 1A,<br>18V ≤ $V_{IN}$ ≤ 60V<br>Circuit Figure 25 and Figure 26 | 15 | <br>14.55/**14.40**<br>15.525/**15.675** | <br>14.40/**14.25**<br>15.68/**15.83** | V<br>V(Min)<br>V(Max) |
| η | Efficiency | $V_{IN}$ = 18V, $I_{LOAD}$ = 1A | 88 | | | % |

(1) All limits specified at room temperature (standard type face) and at **temperature extremes (bold type face)**. All limits are used to calculate Average Outgoing Quality Level, and all are 100% production tested.
(2) All limits specified at room temperature (standard type face) and at **temperature extremes (bold type face)**. All room temperature limits are 100% production tested. All limits at **temperature extremes** are specified via correlation using standard Statistical Quality Control (SQC) methods.
(3) External components such as the catch diode, inductor, input and output capacitors can affect switching regulator system performance. When the LM1575/LM2575 is used as shown in the test circuit Figure 25 and Figure 26, system performance will be as shown in system parameters of Electrical Characteristics.

## ELECTRICAL CHARACTERISTICS LM1575-ADJ, LM2575-ADJ, LM2575HV-ADJ

Specifications with standard type face are for $T_J$= 25°C, and those with **boldface type** apply over **full Operating Temperature Range**.

| Symbol | Parameter | Conditions | Typ | LM1575-ADJ Limit (1) | LM2575-ADJ LM2575HV-ADJ Limit (2) | Units (Limits) |
|---|---|---|---|---|---|---|
| **SYSTEM PARAMETERS** Test Circuit Figure 25 and Figure 26 (3) | | | | | | |
| $V_{OUT}$ | Feedback Voltage | $V_{IN}$ = 12V, $I_{LOAD}$ = 0.2A<br>$V_{OUT}$ = 5V<br>Circuit Figure 25 and Figure 26 | 1.230 | <br>1.217<br>1.243 | <br>1.217<br>1.243 | V<br>V(Min)<br>V(Max) |
| $V_{OUT}$ | Feedback Voltage LM1575/LM2575 | 0.2A ≤ $I_{LOAD}$ ≤ 1A,<br>8V ≤ $V_{IN}$ ≤ 40V<br>$V_{OUT}$ = 5V, Circuit Figure 25 and Figure 26 | 1.230 | <br>1.205/**1.193**<br>1.255/**1.267** | <br>1.193/**1.180**<br>1.267/**1.280** | V<br>V(Min)<br>V(Max) |
| $V_{OUT}$ | Feedback Voltage LM2575HV | 0.2A ≤ $I_{LOAD}$ ≤ 1A,<br>8V ≤ $V_{IN}$ ≤ 60V<br>$V_{OUT}$ = 5V, Circuit Figure 25 and Figure 26 | 1.230 | <br>1.205/**1.193**<br>1.261/**1.273** | <br>1.193/**1.180**<br>1.273/**1.286** | V<br>V(Min)<br>V(Max) |
| η | Efficiency | $V_{IN}$ = 12V, $I_{LOAD}$ = 1A, $V_{OUT}$ = 5V | 77 | | | % |

(1) All limits specified at room temperature (standard type face) and at **temperature extremes (bold type face)**. All limits are used to calculate Average Outgoing Quality Level, and all are 100% production tested.
(2) All limits specified at room temperature (standard type face) and at **temperature extremes (bold type face)**. All room temperature limits are 100% production tested. All limits at **temperature extremes** are specified via correlation using standard Statistical Quality Control (SQC) methods.
(3) External components such as the catch diode, inductor, input and output capacitors can affect switching regulator system performance. When the LM1575/LM2575 is used as shown in the test circuit Figure 25 and Figure 26, system performance will be as shown in system parameters of Electrical Characteristics.


Copyright © 1999–2013, Texas Instruments Incorporated

## ELECTRICAL CHARACTERISTICS ALL OUTPUT VOLTAGE VERSIONS

Specifications with standard type face are for $T_J$ = 25°C, and those with **boldface type** apply over **full Operating Temperature Range**. Unless otherwise specified, $V_{IN}$ = 12V for the 3.3V, 5V, and Adjustable version, $V_{IN}$ = 25V for the 12V version, and $V_{IN}$ = 30V for the 15V version. $I_{LOAD}$ = 200 mA.

| Symbol | Parameter | Conditions | Typ | LM1575-XX | LM2575-XX LM2575HV-XX | Units (Limits) |
|---|---|---|---|---|---|---|
| | | | | Limit (1) | Limit (2) | |
| **DEVICE PARAMETERS** | | | | | | |
| $I_b$ | Feedback Bias Current | $V_{OUT}$ = 5V (Adjustable Version Only) | 50 | 100/**500** | 100/**500** | nA |
| $f_O$ | Oscillator Frequency | See (3) | 52 | | | kHz |
| | | | | 47/**43** | 47/**42** | kHz(Min) |
| | | | | 58/**62** | 58/**63** | kHz(Max) |
| $V_{SAT}$ | Saturation Voltage | $I_{OUT}$ = 1A (4) | 0.9 | | | V |
| | | | | 1.2/**1.4** | 1.2/**1.4** | V(Max) |
| DC | Max Duty Cycle (ON) | See (5) | 98 | | | % |
| | | | | 93 | 93 | %(Min) |
| $I_{CL}$ | Current Limit | Peak Current (4)(3) | 2.2 | | | A |
| | | | | 1.7/**1.3** | 1.7/**1.3** | A(Min) |
| | | | | 3.0/**3.2** | 3.0/**3.2** | A(Max) |
| $I_L$ | Output Leakage Current | Output = 0V | | 2 | 2 | mA(Max) |
| | | Output = −1V | 7.5 | | | mA |
| | | Output = −1V (6)(7) | | 30 | 30 | mA(Max) |
| $I_Q$ | Quiescent Current | See (6) | 5 | | | mA |
| | | | | 10/**12** | 10 | mA(Max) |
| $I_{STBY}$ | Standby Quiescent Current | $\overline{ON}$ /OFF Pin = 5V (OFF) | 50 | | | μA |
| | | | | 200/**500** | 200 | μA(Max) |
| $\theta_{JA}$ | Thermal Resistance | TO-220 Package, Junction to Ambient (8) | 65 | | | |
| $\theta_{JA}$ | | TO-220 Package, Junction to Ambient (9) | 45 | | | |
| $\theta_{JC}$ | | TO-220 Package, Junction to Case | 2 | | | |
| $\theta_{JA}$ | | CDIP Package, Junction to Ambient (10) | 85 | | | °C/W |
| $\theta_{JA}$ | | SOIC Package, Junction to Ambient (10) | 100 | | | |
| $\theta_{JA}$ | | DDPAK/TO-263 Package, Junction to Ambient (11) | 37 | | | |

(1) All limits specified at room temperature (standard type face) and at **temperature extremes (bold type face)**. All limits are used to calculate Average Outgoing Quality Level, and all are 100% production tested.
(2) All limits specified at room temperature (standard type face) and at **temperature extremes (bold type face)**. All room temperature limits are 100% production tested. All limits at **temperature extremes** are specified via correlation using standard Statistical Quality Control (SQC) methods.
(3) The oscillator frequency reduces to approximately 18 kHz in the event of an output short or an overload which causes the regulated output voltage to drop approximately 40% from the nominal output voltage. This self protection feature lowers the average power dissipation of the IC by lowering the minimum duty cycle from 5% down to approximately 2%.
(4) Output (pin 2) sourcing current. No diode, inductor or capacitor connected to output pin.
(5) Feedback (pin 4) removed from output and connected to 0V.
(6) Feedback (pin 4) removed from output and connected to +12V for the Adjustable, 3.3V, and 5V versions, and +25V for the 12V and 15V versions, to force the output transistor OFF.
(7) $V_{IN}$ = 40V (60V for the high voltage version).
(8) Junction to ambient thermal resistance (no external heat sink) for the 5 lead TO-220 package mounted vertically, with ½ inch leads in a socket, or on a PC board with minimum copper area.
(9) Junction to ambient thermal resistance (no external heat sink) for the 5 lead TO-220 package mounted vertically, with ½ inch leads soldered to a PC board containing approximately 4 square inches of copper area surrounding the leads.
(10) Junction to ambient thermal resistance with approximately 1 square inch of pc board copper surrounding the leads. Additional copper area will lower thermal resistance further. See thermal model in Switchers made Simple software.
(11) If the DDPAK/TO-263 package is used, the thermal resistance can be reduced by increasing the PC board copper area thermally connected to the package: Using 0.5 square inches of copper area, $\theta_{JA}$ is 50°C/W; with 1 square inch of copper area, $\theta_{JA}$ is 37°C/W; and with 1.6 or more square inches of copper area, $\theta_{JA}$ is 32°C/W.

Copyright © 1999–2013, Texas Instruments Incorporated

## ELECTRICAL CHARACTERISTICS ALL OUTPUT VOLTAGE VERSIONS (continued)

Specifications with standard type face are for $T_J$ = 25°C, and those with **boldface type** apply over **full Operating Temperature Range**. Unless otherwise specified, $V_{IN}$ = 12V for the 3.3V, 5V, and Adjustable version, $V_{IN}$ = 25V for the 12V version, and $V_{IN}$ = 30V for the 15V version. $I_{LOAD}$ = 200 mA.

| Symbol | Parameter | Conditions | Typ | LM1575-XX | LM2575-XX LM2575HV-XX | Units (Limits) |
|---|---|---|---|---|---|---|
| | | | | Limit (1) | Limit (2) | |
| **$\overline{\text{ON}}$ /OFF CONTROL Test Circuit** Figure 25 and Figure 26 | | | | | | |
| $V_{IH}$ | $\overline{\text{ON}}$ /OFF Pin Logic Input Level | $V_{OUT}$ = 0V | 1.4 | 2.2/**2.4** | 2.2/**2.4** | V(Min) |
| $V_{IL}$ | | $V_{OUT}$ = Nominal Output Voltage | 1.2 | 1.0/**0.8** | 1.0/**0.8** | V(Max) |
| $I_{IH}$ | $\overline{\text{ON}}$ /OFF Pin Input Current | $\overline{\text{ON}}$ /OFF Pin = 5V (OFF) | 12 | 30 | 30 | μA μA(Max) |
| $I_{IL}$ | | $\overline{\text{ON}}$ /OFF Pin = 0V (ON) | 0 | 10 | 10 | μA μA(Max) |


Copyright © 1999–2013, Texas Instruments Incorporated

## TYPICAL PERFORMANCE CHARACTERISTICS

(Circuit Figure 25 and Figure 26)

**Normalized Output Voltage**

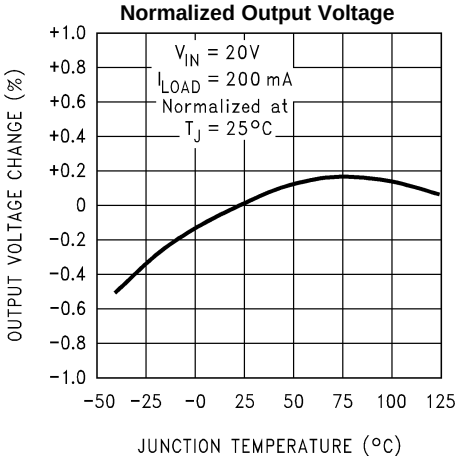


**Figure 9.**

**Line Regulation**

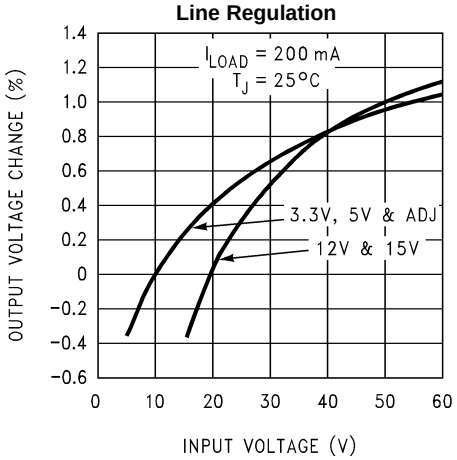


**Figure 10.**

**Dropout Voltage**

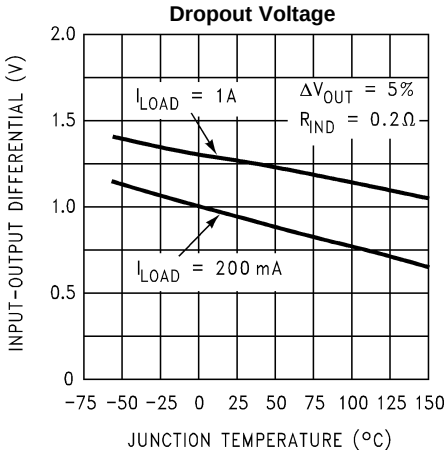


**Figure 11.**

**Current Limit**

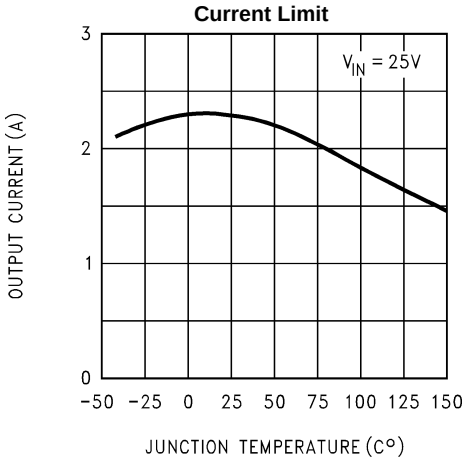


**Figure 12.**

**Quiescent Current**

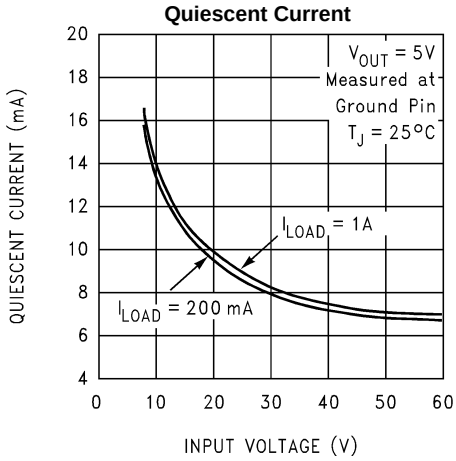


**Figure 13.**

**Standby Quiescent Current**

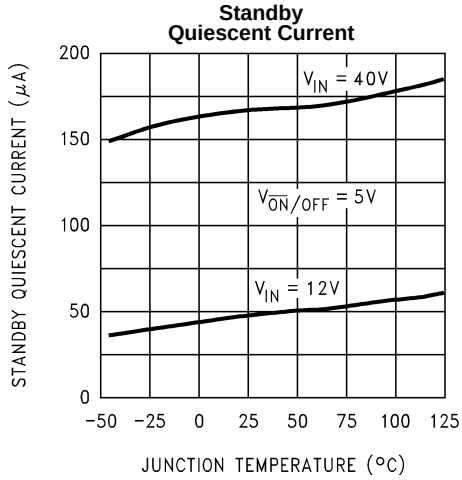


**Figure 14.**

Copyright © 1999–2013, Texas Instruments Incorporated

## TYPICAL PERFORMANCE CHARACTERISTICS (continued)

(Circuit Figure 25 and Figure 26)

**Oscillator Frequency**

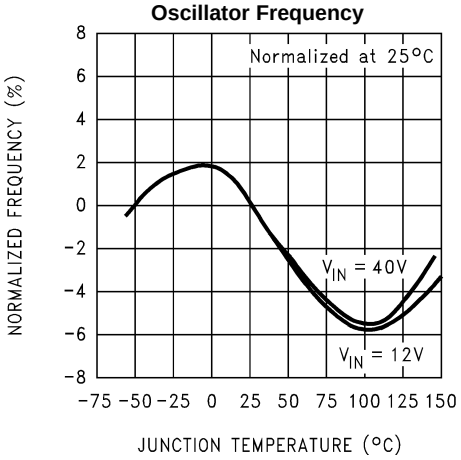


**Figure 15.**

**Switch Saturation Voltage**

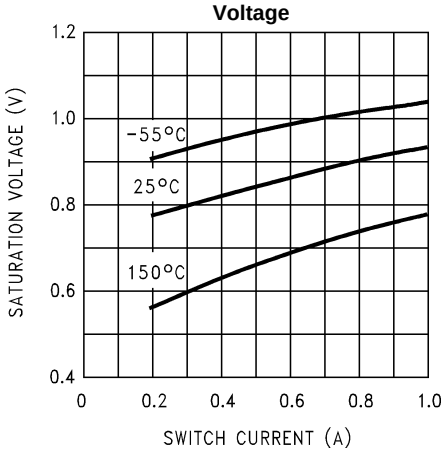


**Figure 16.**

**Efficiency**

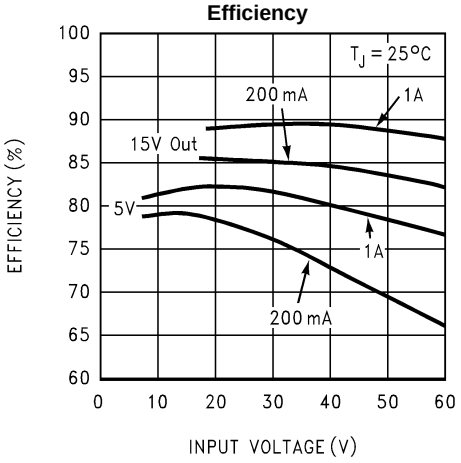


**Figure 17.**

**Minimum Operating Voltage**

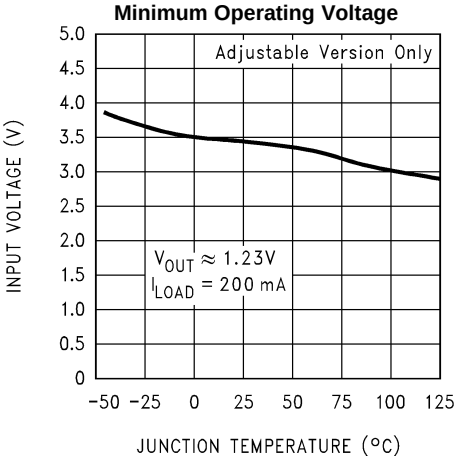


**Figure 18.**

**Quiescent Current vs Duty Cycle**

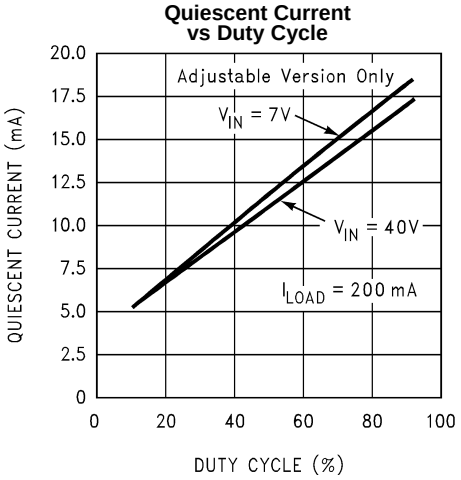


**Figure 19.**

**Feedback Voltage vs Duty Cycle**

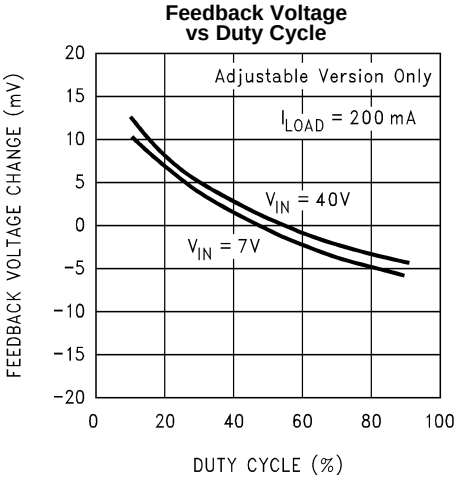


**Figure 20.**


Copyright © 1999–2013, Texas Instruments Incorporated

## TYPICAL PERFORMANCE CHARACTERISTICS (continued)

(Circuit Figure 25 and Figure 26)

**Feedback Pin Current**

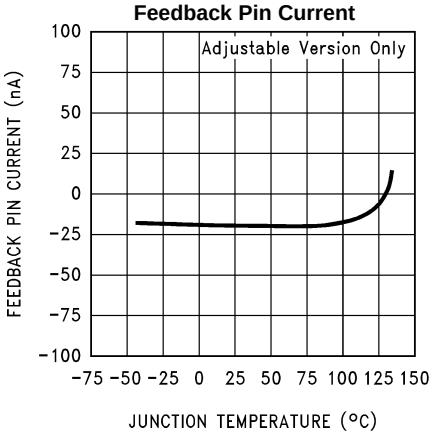


**Figure 21.**

**Maximum Power Dissipation (TO-263) (See (1))**

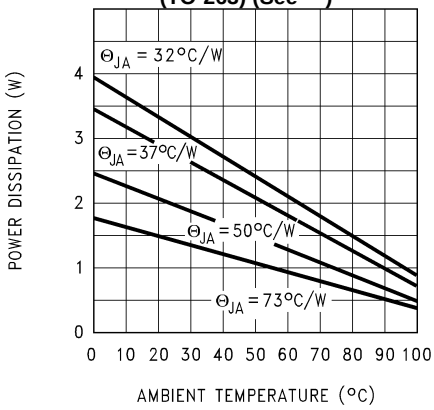


**Figure 22.**

**Switching Waveforms**

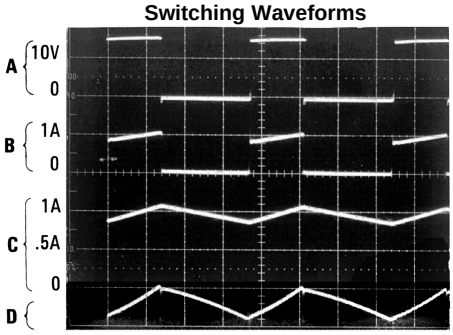


$V_{OUT}$ = 5V
A: Output Pin Voltage, 10V/div
B: Output Pin Current, 1A/div
C: Inductor Current, 0.5A/div
D: Output Ripple Voltage, 20 mV/div, AC-Coupled
**Horizontal Time Base: 5 μs/div**

**Figure 23.**

**Load Transient Response**

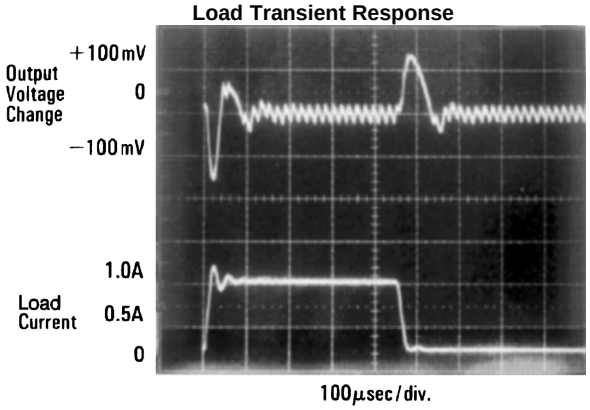


**Figure 24.**

(1) If the DDPAK/TO-263 package is used, the thermal resistance can be reduced by increasing the PC board copper area thermally connected to the package: Using 0.5 square inches of copper area, $\theta_{JA}$ is 50°C/W; with 1 square inch of copper area, $\theta_{JA}$ is 37°C/W; and with 1.6 or more square inches of copper area, $\theta_{JA}$ is 32°C/W.

## TEST CIRCUIT AND LAYOUT GUIDELINES

As in any switching regulator, layout is very important. Rapidly switching currents associated with wiring inductance generate voltage transients which can cause problems. For minimal inductance and ground loops, the length of the leads indicated by heavy lines should be kept as short as possible. Single-point grounding (as indicated) or ground plane construction should be used for best results. When using the Adjustable version, physically locate the programming resistors near the regulator, to keep the sensitive feedback wiring short.

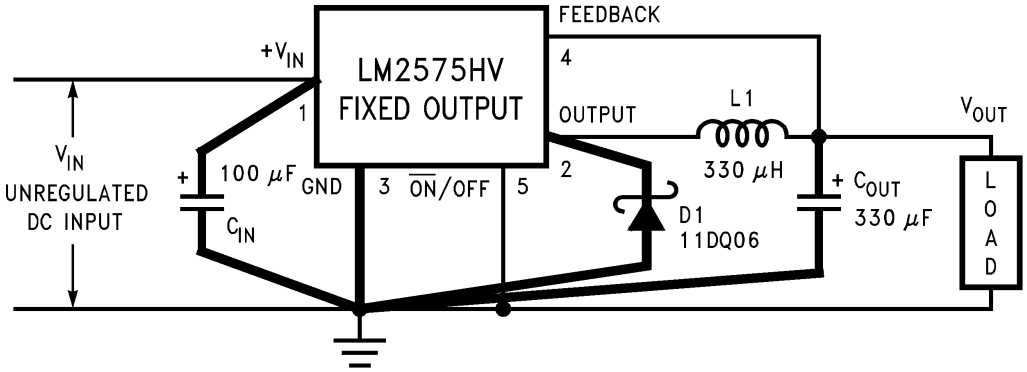


$C_{IN}$ — 100 µF, 75V, Aluminum Electrolytic
$C_{OUT}$ — 330 µF, 25V, Aluminum Electrolytic
D1 — Schottky, 11DQ06
L1 — 330 µH, PE-52627 (for 5V in, 3.3V out, use 100 µH, PE-92108)

**Figure 25. Fixed Output Voltage Versions**

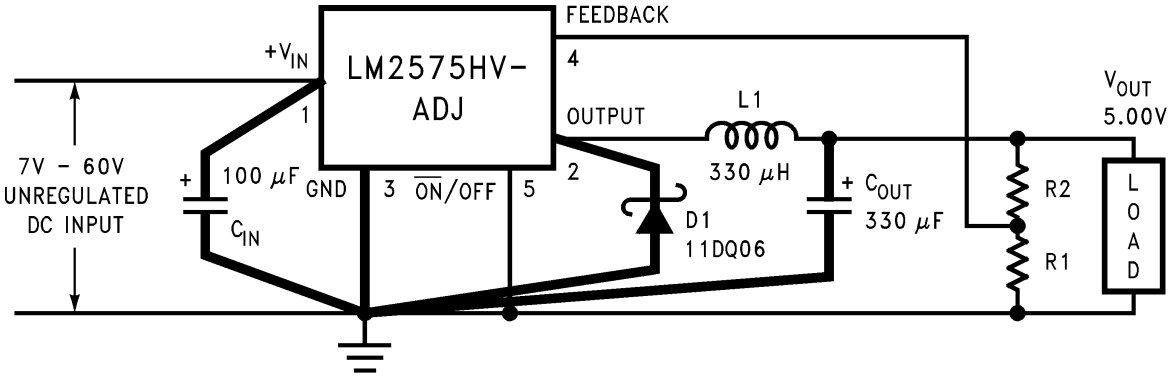


$$V_{OUT} = V_{REF}\left(1 + \frac{R2}{R1}\right)$$

$$R2 = R1\left(\frac{V_{OUT}}{V_{REF}} - 1\right)$$

where
$V_{REF}$ = 1.23V, R1 between 1k and 5k.
R1 — 2k, 0.1%
R2 — 6.12k, 0.1%
Pin numbers are for the TO-220 package.

**Figure 26. Adjustable Output Voltage Version**


Copyright © 1999–2013, Texas Instruments Incorporated

## LM2575 Series Buck Regulator Design Procedure

| PROCEDURE (Fixed Output Voltage Versions) | EXAMPLE (Fixed Output Voltage Versions) |
|---|---|
| **Given:**<br>$V_{IN}$(Max) = Maximum Input Voltage<br>$V_{OUT}$ = Regulated Output Voltage (3.3V, 5V, 12V, or 15V)<br>$I_{LOAD}$(Max) = Maximum Load Current | **Given:**<br>$V_{OUT}$ = 5V<br>$V_{IN}$(Max) = 20V<br>$I_{LOAD}$(Max) = 0.8A |
| **1. Inductor Selection (L1)**<br>**A.** Select the correct Inductor value selection guide from Figure 27, Figure 28, Figure 29 and Figure 30 (Output voltages of 3.3V, 5V, 12V or 15V respectively). For other output voltages, see the design procedure of Figure 26 .<br>**B.** From the inductor value selection guide, identify the inductance region intersected by $V_{IN}$(Max) and $I_{LOAD}$(Max), and note the inductor code for that region.<br>**C.** Identify the inductor value from the inductor code, and select an appropriate inductor from the table shown in Table 2. Part numbers are listed for three inductor manufacturers. The inductor chosen must be rated for operation at the LM2575 switching frequency (52 kHz) and for a current rating of 1.15 × $I_{LOAD}$. For additional inductor information, see INDUCTOR SELECTION. | **1. Inductor Selection (L1)**<br>**A.** Use the selection guide shown in Figure 28.<br>**B.** From the selection guide, the inductance area intersected by the 20V line and 0.8A line is L330.<br>**C.** Inductor value required is 330 µH. From the table in Table 2, choose AIE 415-0926, Pulse Engineering PE-52627, or RL1952. |
| **2. Output Capacitor Selection ($C_{OUT}$)**<br>**A.** The value of the output capacitor together with the inductor defines the dominate pole-pair of the switching regulator loop. For stable operation and an acceptable output ripple voltage, (approximately 1% of the output voltage) a value between 100 µF and 470 µF is recommended.<br>**B.** The capacitor's voltage rating should be at least 1.5 times greater than the output voltage. For a 5V regulator, a rating of at least 8V is appropriate, and a 10V or 15V rating is recommended.<br>Higher voltage electrolytic capacitors generally have lower ESR numbers, and for this reason it may be necessary to select a capacitor rated for a higher voltage than would normally be needed. | **2. Output Capacitor Selection ($C_{OUT}$)**<br>**A.** $C_{OUT}$ = 100 µF to 470 µF standard aluminum electrolytic.<br>**B.** Capacitor voltage rating = 20V. |
| **3. Catch Diode Selection (D1)**<br>**A.** The catch-diode current rating must be at least 1.2 times greater than the maximum load current. Also, if the power supply design must withstand a continuous output short, the diode should have a current rating equal to the maximum current limit of the LM2575. The most stressful condition for this diode is an overload or shorted output condition.<br>**B.** The reverse voltage rating of the diode should be at least 1.25 times the maximum input voltage. | **3. Catch Diode Selection (D1)**<br>**A.** For this example, a 1A current rating is adequate.<br>**B.** Use a 30V 1N5818 or SR103 Schottky diode, or any of the suggested fast-recovery diodes shown in Table 1. |
| **4. Input Capacitor ($C_{IN}$)**<br>An aluminum or tantalum electrolytic bypass capacitor located close to the regulator is needed for stable operation. | **4. Input Capacitor ($C_{IN}$)**<br>A 47 µF, 25V aluminum electrolytic capacitor located near the input and ground pins provides sufficient bypassing. |

Copyright © 1999–2013, Texas Instruments Incorporated

## Inductor Value Selection Guides

(For Continuous Mode Operation)

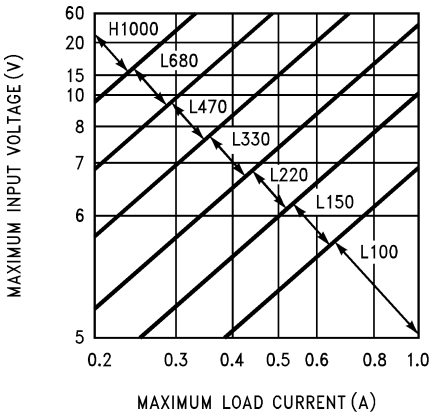


**Figure 27. LM2575(HV)-3.3**

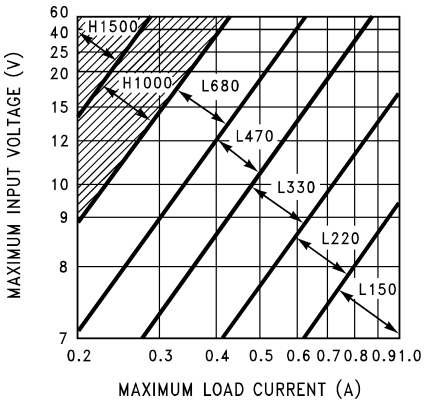


**Figure 28. LM2575(HV)-5.0**

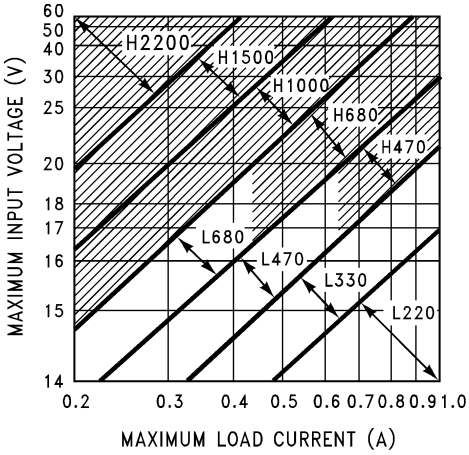


**Figure 29. LM2575(HV)-12**

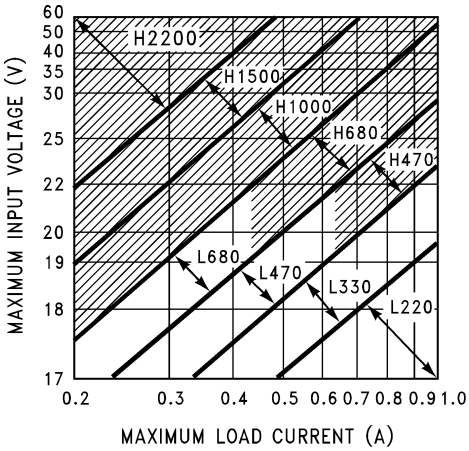


**Figure 30. LM2575(HV)-15**

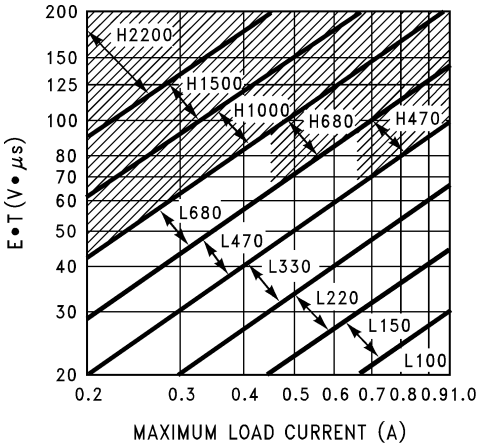


**Figure 31. LM2575(HV)-ADJ**


Copyright © 1999–2013, Texas Instruments Incorporated

| PROCEDURE (Adjustable Output Voltage Versions) | EXAMPLE (Adjustable Output Voltage Versions) |
|---|---|
| **Given:**<br>$V_{OUT}$ = Regulated Output Voltage<br>$V_{IN}$(Max) = Maximum Input Voltage<br>$I_{LOAD}$(Max) = Maximum Load Current<br>F = Switching Frequency *(Fixed at 52 kHz)* | **Given:**<br>$V_{OUT}$ = 10V<br>$V_{IN}$(Max) = 25V<br>$I_{LOAD}$(Max) = 1A<br>F = 52 kHz |
| **1. Programming Output Voltage** *(Selecting R1 and R2, as shown in Figure 25 and Figure 26)*<br>Use the following formula to select the appropriate resistor values.<br>$V_{OUT} = V_{REF}\left(1 + \frac{R2}{R1}\right)$ where $V_{REF} = 1.23V$ (1)<br>$R_1$ can be between 1k and 5k. *(For best temperature coefficient and stability with time, use 1% metal film resistors)*<br>$R2 = R1\left(\frac{V_{OUT}}{V_{REF}} - 1\right)$ (2) | **1. Programming Output Voltage** *(Selecting R1 and R2)*<br>$V_{OUT} = 1.23\left(1 + \frac{R2}{R1}\right)$ Select R1 = 1k<br>$R2 = R1\left(\frac{V_{OUT}}{V_{REF}} - 1\right) = 1k\left(\frac{10V}{1.23V} - 1\right)$ (3)<br>R2 = 1k (8.13 − 1) = 7.13k, closest 1% value is 7.15k |
| **2. Inductor Selection (L1)**<br>**A.** Calculate the inductor Volt • microsecond constant,<br>E • T (V • µs), from the following formula:<br>$E \bullet T = (V_{IN} - V_{OUT})\frac{V_{OUT}}{V_{IN}} \bullet \frac{1000}{F\ (in\ kHz)}(V \bullet \mu s)$ (4)<br>**B.** Use the E • T value from the previous formula and match it with the E • T number on the vertical axis of the **Inductor Value Selection Guide** shown in Figure 31.<br>**C.** On the horizontal axis, select the maximum load current.<br>**D.** Identify the inductance region intersected by the E • T value and the maximum load current value, and note the inductor code for that region.<br>**E.** Identify the inductor value from the inductor code, and select an appropriate inductor from the table shown in Table 2. Part numbers are listed for three inductor manufacturers. The inductor chosen must be rated for operation at the LM2575 switching frequency (52 kHz) and for a current rating of 1.15 × $I_{LOAD}$. For additional inductor information, see INDUCTOR SELECTION. | **2. Inductor Selection (L1)**<br>**A.** Calculate E • T (V • µs)<br>$E \bullet T = (25 - 10) \bullet \frac{10}{25} \bullet \frac{1000}{52} = 115\ V \bullet \mu s$ (5)<br>**B.** E • T = 115 V • µs<br>**C.** $I_{LOAD}$(Max) = 1A<br>**D.** Inductance Region = H470<br>**E.** Inductor Value = 470 µH *Choose from **AIE** part #430-0634, **Pulse Engineering** part #PE-53118, or **Renco** part #RL-1961.* |
| **3. Output Capacitor Selection ($C_{OUT}$)**<br>**A.** The value of the output capacitor together with the inductor defines the dominate pole-pair of the switching regulator loop. For stable operation, the capacitor must satisfy the following requirement:<br>$C_{OUT} \geq 7{,}785\frac{V_{IN}(Max)}{V_{OUT} \bullet L(\mu H)}(\mu F)$ (6)<br>The above formula yields capacitor values between 10 µF and 2000 µF that will satisfy the loop requirements for stable operation. But to achieve an acceptable output ripple voltage, (approximately 1% of the output voltage) and transient response, the output capacitor may need to be several times larger than the above formula yields.<br>**B.** The capacitor's voltage rating should be at last 1.5 times greater than the output voltage. For a 10V regulator, a rating of at least 15V or more is recommended.<br>Higher voltage electrolytic capacitors generally have lower ESR numbers, and for this reason it may be necessary to select a capacitor rate for a higher voltage than would normally be needed. | **3. Output Capacitor Selection ($C_{OUT}$)**<br>**A.**<br>$C_{OUT} > 7{,}785\frac{25}{10 \bullet 150} = 130\ \mu F$ (7)<br>However, for acceptable output ripple voltage select<br>$C_{OUT} \geq 220\ \mu F$<br>$C_{OUT}$ = 220 µF electrolytic capacitor |
| *(Continued)* | *(Continued)* |

| PROCEDURE (Adjustable Output Voltage Versions) | EXAMPLE (Adjustable Output Voltage Versions) |
|---|---|
| **4. Catch Diode Selection (D1)**<br>**A.** The catch-diode current rating must be at least 1.2 times greater than the maximum load current. Also, if the power supply design must withstand a continuous output short, the diode should have a current rating equal to the maximum current limit of the LM2575. The most stressful condition for this diode is an overload or shorted output. See Table 1.<br>**B.** The reverse voltage rating of the diode should be at least 1.25 times the maximum input voltage. | **4. Catch Diode Selection (D1)**<br>**A.** For this example, a 3A current rating is adequate.<br>**B.** Use a 40V MBR340 or 31DQ04 Schottky diode, or any of the suggested fast-recovery diodes in Table 1. |
| **5. Input Capacitor ($C_{IN}$)**<br>An aluminum or tantalum electrolytic bypass capacitor located close to the regulator is needed for stable operation. | **5. Input Capacitor ($C_{IN}$)**<br>A 100 µF aluminum electrolytic capacitor located near the input and ground pins provides sufficient bypassing. |

*To further simplify the buck regulator design procedure, TI is making available computer design software to be used with the Simple Switcher line of switching regulators.* ***Switchers Made Simple*** *(version 3.3) is available on a (3½") diskette for IBM compatible computers from a TI sales office in your area.*

### Table 1. Diode Selection Guide

| $V_R$ | Schottky | | Fast Recovery | |
|---|---|---|---|---|
| | 1A | 3A | 1A | 3A |
| 20V | 1N5817<br>MBR120P<br>SR102 | 1N5820<br>MBR320<br>SR302 | The following diodes are all rated to 100V:<br>11DF1<br>MUR110<br>HER102 | The following diodes are all rated to 100V:<br>31DF1<br>MURD310<br>HER302 |
| 30V | 1N5818<br>MBR130P<br>11DQ03<br>SR103 | 1N5821<br>MBR330<br>31DQ03<br>SR303 | | |
| 40V | 1N5819<br>MBR140P<br>11DQ04<br>SR104 | IN5822<br>MBR340<br>31DQ04<br>SR304 | | |
| 50V | MBR150<br>11DQ05<br>SR105 | MBR350<br>31DQ05<br>SR305 | | |
| 60V | MBR160<br>11DQ06<br>SR106 | MBR360<br>31DQ06<br>SR306 | | |

### Table 2. Inductor Selection by Manufacturer's Part Number

| Inductor Code | Inductor Value | Schott (1) | Pulse Eng. (2) | Renco (3) |
|---|---|---|---|---|
| L100 | 100 µH | 67127000 | PE-92108 | RL2444 |
| L150 | 150 µH | 67127010 | PE-53113 | RL1954 |
| L220 | 220 µH | 67127020 | PE-52626 | RL1953 |
| L330 | 330 µH | 67127030 | PE-52627 | RL1952 |
| L470 | 470 µH | 67127040 | PE-53114 | RL1951 |
| L680 | 680 µH | 67127050 | PE-52629 | RL1950 |
| H150 | 150 µH | 67127060 | PE-53115 | RL2445 |
| H220 | 220 µH | 67127070 | PE-53116 | RL2446 |
| H330 | 330 µH | 67127080 | PE-53117 | RL2447 |
| H470 | 470 µH | 67127090 | PE-53118 | RL1961 |
| H680 | 680 µH | 67127100 | PE-53119 | RL1960 |
| H1000 | 1000 µH | 67127110 | PE-53120 | RL1959 |

(1) Schott Corp., (612) 475-1173, 1000 Parkers Lake Rd., Wayzata, MN 55391.
(2) Pulse Engineering, (619) 674-8100, P.O. Box 12236, San Diego, CA 92112.
(3) Renco Electronics Inc., (516) 586-5566, 60 Jeffryn Blvd. East, Deer Park, NY 11729.


Copyright © 1999–2013, Texas Instruments Incorporated

**Table 2. Inductor Selection by Manufacturer's Part Number (continued)**

| Inductor Code | Inductor Value | Schott (1) | Pulse Eng. (2) | Renco (3) |
|---|---|---|---|---|
| H1500 | 1500 µH | 67127120 | PE-53121 | RL1958 |
| H2200 | 2200 µH | 67127130 | PE-53122 | RL2448 |

## APPLICATION HINTS

### INPUT CAPACITOR ($C_{IN}$)

To maintain stability, the regulator input pin must be bypassed with at least a 47 µF electrolytic capacitor. The capacitor's leads must be kept short, and located near the regulator.

If the operating temperature range includes temperatures below −25°C, the input capacitor value may need to be larger. With most electrolytic capacitors, the capacitance value decreases and the ESR increases with lower temperatures and age. Paralleling a ceramic or solid tantalum capacitor will increase the regulator stability at cold temperatures. For maximum capacitor operating lifetime, the capacitor's RMS ripple current rating should be greater than

$$1.2 \times \left(\frac{t_{ON}}{T}\right) \times I_{LOAD}$$

$$\text{where } \frac{t_{ON}}{T} = \frac{V_{OUT}}{V_{IN}} \text{ for a buck regulator}$$

$$\text{and } \frac{t_{ON}}{T} = \frac{|V_{OUT}|}{|V_{OUT}| + V_{IN}} \text{ for a buck-boost regulator.} \tag{8}$$

### INDUCTOR SELECTION

All switching regulators have two basic modes of operation: continuous and discontinuous. The difference between the two types relates to the inductor current, whether it is flowing continuously, or if it drops to zero for a period of time in the normal switching cycle. Each mode has distinctively different operating characteristics, which can affect the regulator performance and requirements.

The LM2575 (or any of the Simple Switcher family) can be used for both continuous and discontinuous modes of operation.

The inductor value selection guides in Figure 27 through Figure 31 were designed for buck regulator designs of the continuous inductor current type. When using inductor values shown in the inductor selection guide, the peak-to-peak inductor ripple current will be approximately 20% to 30% of the maximum DC current. With relatively heavy load currents, the circuit operates in the continuous mode (inductor current always flowing), but under light load conditions, the circuit will be forced to the discontinuous mode (inductor current falls to zero for a period of time). This discontinuous mode of operation is perfectly acceptable. For light loads (less than approximately 200 mA) it may be desirable to operate the regulator in the discontinuous mode, primarily because of the lower inductor values required for the discontinuous mode.

The selection guide chooses inductor values suitable for continuous mode operation, but if the inductor value chosen is prohibitively high, the designer should investigate the possibility of discontinuous operation. The computer design software ***Switchers Made Simple*** will provide all component values for discontinuous (as well as continuous) mode of operation.

Inductors are available in different styles such as pot core, toriod, E-frame, bobbin core, etc., as well as different core materials, such as ferrites and powdered iron. The least expensive, the bobbin core type, consists of wire wrapped on a ferrite rod core. This type of construction makes for an inexpensive inductor, but since the magnetic flux is not completely contained within the core, it generates more electromagnetic interference (EMI). This EMI can cause problems in sensitive circuits, or can give incorrect scope readings because of induced voltages in the scope probe.

The inductors listed in the selection chart include ferrite pot core construction for AIE, powdered iron toroid for Pulse Engineering, and ferrite bobbin core for Renco.

Copyright © 1999–2013, Texas Instruments Incorporated

An inductor should not be operated beyond its maximum rated current because it may saturate. When an inductor begins to saturate, the inductance decreases rapidly and the inductor begins to look mainly resistive (the DC resistance of the winding). This will cause the switch current to rise very rapidly. Different inductor types have different saturation characteristics, and this should be kept in mind when selecting an inductor.

The inductor manufacturer's data sheets include current and energy limits to avoid inductor saturation.

### INDUCTOR RIPPLE CURRENT

When the switcher is operating in the continuous mode, the inductor current waveform ranges from a triangular to a sawtooth type of waveform (depending on the input voltage). For a given input voltage and output voltage, the peak-to-peak amplitude of this inductor current waveform remains constant. As the load current rises or falls, the entire sawtooth current waveform also rises or falls. The average DC value of this waveform is equal to the DC load current (in the buck regulator configuration).

If the load current drops to a low enough level, the bottom of the sawtooth current waveform will reach zero, and the switcher will change to a discontinuous mode of operation. This is a perfectly acceptable mode of operation. Any buck switching regulator (no matter how large the inductor value is) will be forced to run discontinuous if the load current is light enough.

### OUTPUT CAPACITOR

An output capacitor is required to filter the output voltage and is needed for loop stability. The capacitor should be located near the LM2575 using short pc board traces. Standard aluminum electrolytics are usually adequate, but low ESR types are recommended for low output ripple voltage and good stability. The ESR of a capacitor depends on many factors, some which are: the value, the voltage rating, physical size and the type of construction. In general, low value or low voltage (less than 12V) electrolytic capacitors usually have higher ESR numbers.

The amount of output ripple voltage is primarily a function of the ESR (Equivalent Series Resistance) of the output capacitor and the amplitude of the inductor ripple current ($\Delta I_{IND}$). (See INDUCTOR RIPPLE CURRENT).

The lower capacitor values (220 µF–680 µF) will allow typically 50 mV to 150 mV of output ripple voltage, while larger-value capacitors will reduce the ripple to approximately 20 mV to 50 mV.

$$\text{Output Ripple Voltage} = (\Delta I_{IND})\ (\text{ESR of } C_{OUT}) \tag{9}$$

To further reduce the output ripple voltage, several standard electrolytic capacitors may be paralleled, or a higher-grade capacitor may be used. Such capacitors are often called “high-frequency,” “low-inductance,” or “low-ESR.” These will reduce the output ripple to 10 mV or 20 mV. However, when operating in the continuous mode, reducing the ESR below 0.05Ω can cause instability in the regulator.

Tantalum capacitors can have a very low ESR, and should be carefully evaluated if it is the only output capacitor. Because of their good low temperature characteristics, a tantalum can be used in parallel with aluminum electrolytics, with the tantalum making up 10% or 20% of the total capacitance.

The capacitor's ripple current rating at 52 kHz should be at least 50% higher than the peak-to-peak inductor ripple current.

### CATCH DIODE

Buck regulators require a diode to provide a return path for the inductor current when the switch is off. This diode should be located close to the LM2575 using short leads and short printed circuit traces.

Because of their fast switching speed and low forward voltage drop, Schottky diodes provide the best efficiency, especially in low output voltage switching regulators (less than 5V). Fast-Recovery, High-Efficiency, or Ultra-Fast Recovery diodes are also suitable, but some types with an abrupt turn-off characteristic may cause instability and EMI problems. A fast-recovery diode with soft recovery characteristics is a better choice. Standard 60 Hz diodes (example: 1N4001 or 1N5400, and so on.) are also **not suitable.** See Table 1 for Schottky and “soft” fast-recovery diode selection guide.

 Copyright © 1999–2013, Texas Instruments Incorporated

### OUTPUT VOLTAGE RIPPLE AND TRANSIENTS

The output voltage of a switching power supply will contain a sawtooth ripple voltage at the switcher frequency, typically about 1% of the output voltage, and may also contain short voltage spikes at the peaks of the sawtooth waveform.

The output ripple voltage is due mainly to the inductor sawtooth ripple current multiplied by the ESR of the output capacitor. (See INDUCTOR SELECTION)

The voltage spikes are present because of the fast switching action of the output switch, and the parasitic inductance of the output filter capacitor. To minimize these voltage spikes, special low inductance capacitors can be used, and their lead lengths must be kept short. Wiring inductance, stray capacitance, as well as the scope probe used to evaluate these transients, all contribute to the amplitude of these spikes.

An additional small LC filter (20 µH & 100 µF) can be added to the output (as shown in Figure 37) to further reduce the amount of output ripple and transients. A 10 × reduction in output ripple voltage and transients is possible with this filter.

### FEEDBACK CONNECTION

The LM2575 (fixed voltage versions) feedback pin must be wired to the output voltage point of the switching power supply. When using the adjustable version, physically locate both output voltage programming resistors near the LM2575 to avoid picking up unwanted noise. Avoid using resistors greater than 100 kΩ because of the increased chance of noise pickup.

### $\overline{\text{ON}}$ /OFF INPUT

For normal operation, the $\overline{\text{ON}}$ /OFF pin should be grounded or driven with a low-level TTL voltage (typically below 1.6V). To put the regulator into standby mode, drive this pin with a high-level TTL or CMOS signal. The $\overline{\text{ON}}$ /OFF pin can be safely pulled up to $+V_{IN}$ without a resistor in series with it. The $\overline{\text{ON}}$ /OFF pin should not be left open.

### GROUNDING

To maintain output voltage stability, the power ground connections must be low-impedance (see Figure 26). For the TO-3 style package, the case is ground. For the 5-lead TO-220 style package, both the tab and pin 3 are ground and either connection may be used, as they are both part of the same copper lead frame.

With the CDIP or SOIC packages, all the pins labeled ground, power ground, or signal ground should be soldered directly to wide printed circuit board copper traces. This assures both low inductance connections and good thermal properties.

### HEAT SINK/THERMAL CONSIDERATIONS

In many cases, no heat sink is required to keep the LM2575 junction temperature within the allowed operating range. For each application, to determine whether or not a heat sink will be required, the following must be identified:

1. Maximum ambient temperature (in the application).
2. Maximum regulator power dissipation (in application).
3. Maximum allowed junction temperature (150°C for the LM1575 or 125°C for the LM2575). For a safe, conservative design, a temperature approximately 15°C cooler than the maximum temperature should be selected.
4. LM2575 package thermal resistances $\theta_{JA}$ and $\theta_{JC}$.

Total power dissipated by the LM2575 can be estimated as follows:

$$P_D = (V_{IN})\,(I_Q) + (V_O/V_{IN})\,(I_{LOAD})\,(V_{SAT})$$

where

- $I_Q$ (quiescent current) and $V_{SAT}$ can be found in the Characteristic Curves shown previously,
- $V_{IN}$ is the applied minimum input voltage,
- $V_O$ is the regulated output voltage
- and $I_{LOAD}$ is the load current. (10)

The dynamic losses during turn-on and turn-off are negligible if a Schottky type catch diode is used.

When no heat sink is used, the junction temperature rise can be determined by the following:

$$\Delta T_J = (P_D)(\theta_{JA}) \quad (11)$$

To arrive at the actual operating junction temperature, add the junction temperature rise to the maximum ambient temperature.

$$T_J = \Delta T_J + T_A \quad (12)$$

If the actual operating junction temperature is greater than the selected safe operating junction temperature determined in step 3, then a heat sink is required.

When using a heat sink, the junction temperature rise can be determined by the following:

$$\Delta T_J = (P_D)(\theta_{JC} + \theta_{interface} + \theta_{Heat\ sink}) \quad (13)$$

The operating junction temperature will be:

$$T_J = T_A + \Delta T_J \quad (14)$$

As shown in Equation 14, if the actual operating junction temperature is greater than the selected safe operating junction temperature, then a larger heat sink is required (one that has a lower thermal resistance).

When using the LM2575 in the plastic CDIP or surface mount SOIC packages, several items about the thermal properties of the packages should be understood. The majority of the heat is conducted out of the package through the leads, with a minor portion through the plastic parts of the package. Since the lead frame is solid copper, heat from the die is readily conducted through the leads to the printed circuit board copper, which is acting as a heat sink.

For best thermal performance, the ground pins and all the unconnected pins should be soldered to generous amounts of printed circuit board copper, such as a ground plane. Large areas of copper provide the best transfer of heat to the surrounding air. Copper on both sides of the board is also helpful in getting the heat away from the package, even if there is no direct copper contact between the two sides. Thermal resistance numbers as low as 40°C/W for the SOIC package, and 30°C/W for the CDIP package can be realized with a carefully engineered pc board.

Included on the ***Switchers Made Simple*** design software is a more precise (non-linear) thermal model that can be used to determine junction temperature with different input-output parameters or different component values. It can also calculate the heat sink thermal resistance required to maintain the regulators junction temperature below the maximum operating temperature.

## ADDITIONAL APPLICATIONS

### INVERTING REGULATOR

Figure 32 shows a LM2575-12 in a buck-boost configuration to generate a negative 12V output from a positive input voltage. This circuit bootstraps the regulator's ground pin to the negative output voltage, then by grounding the feedback pin, the regulator senses the inverted output voltage and regulates it to −12V.

For an input voltage of 12V or more, the maximum available output current in this configuration is approximately 0.35A. At lighter loads, the minimum input voltage required drops to approximately 4.7V.

The switch currents in this buck-boost configuration are higher than in the standard buck-mode design, thus lowering the available output current. Also, the start-up input current of the buck-boost converter is higher than the standard buck-mode regulator, and this may overload an input power source with a current limit less than 1.5A. Using a delayed turn-on or an undervoltage lockout circuit (described in the NEGATIVE BOOST REGULATOR section) would allow the input voltage to rise to a high enough level before the switcher would be allowed to turn on.

Because of the structural differences between the buck and the buck-boost regulator topologies, the buck regulator design procedure section cannot be used to select the inductor or the output capacitor. The recommended range of inductor values for the buck-boost design is between 68 µH and 220 µH, and the output capacitor values must be larger than what is normally required for buck designs. Low input voltages or high output currents require a large value output capacitor (in the thousands of micro Farads).


Copyright © 1999–2013, Texas Instruments Incorporated

The peak inductor current, which is the same as the peak switch current, can be calculated from the following formula:

$$I_p \approx \frac{I_{LOAD}(V_{IN} + |V_O|)}{V_{IN}} + \frac{V_{IN}|V_O|}{V_{IN} + |V_O|} \times \frac{1}{2 L_1 f_{osc}}$$

where

- $f_{osc}$ = 52 kHz. (15)

Under normal continuous inductor current operating conditions, the minimum $V_{IN}$ represents the worst case. Select an inductor that is rated for the peak current anticipated.

Also, the maximum voltage appearing across the regulator is the absolute sum of the input and output voltage. For a −12V output, the maximum input voltage for the LM2575 is +28V, or +48V for the LM2575HV.

The ***Switchers Made Simple*** (version 3.3) design software can be used to determine the feasibility of regulator designs using different topologies, different input-output parameters, different components, and so on.

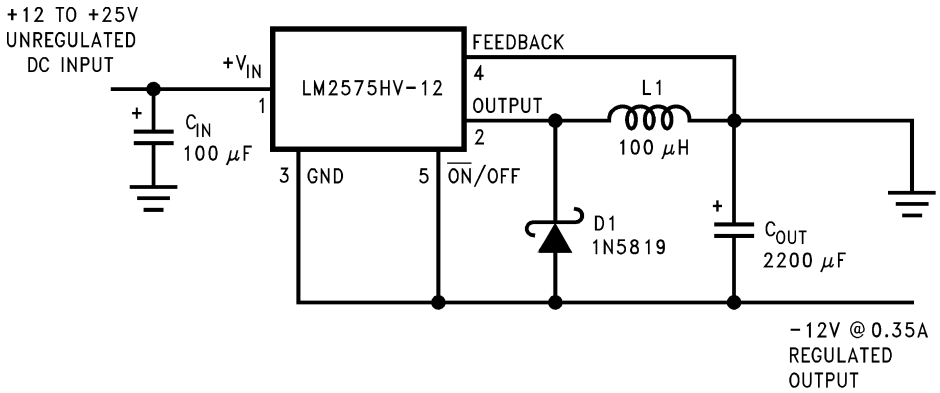


**Figure 32. Inverting Buck-Boost Develops −12V**

## NEGATIVE BOOST REGULATOR

Another variation on the buck-boost topology is the negative boost configuration. The circuit in Figure 33 accepts an input voltage ranging from −5V to −12V and provides a regulated −12V output. Input voltages greater than −12V will cause the output to rise above −12V, but will not damage the regulator.

Because of the boosting function of this type of regulator, the switch current is relatively high, especially at low input voltages. Output load current limitations are a result of the maximum current rating of the switch. Also, boost regulators can not provide current limiting load protection in the event of a shorted load, so some other means (such as a fuse) may be necessary.

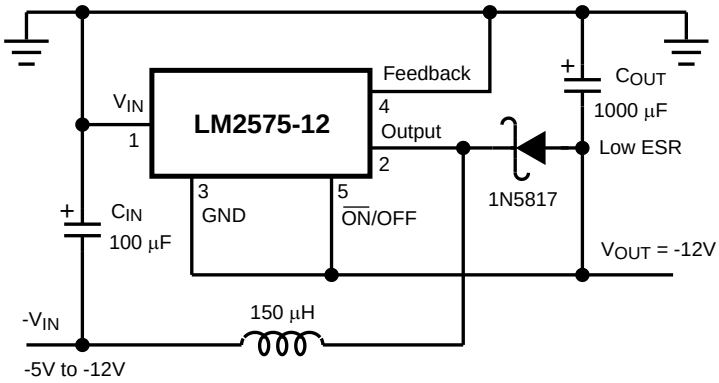


Typical Load Current
200 mA for $V_{IN}$ = −5.2V
500 mA for $V_{IN}$ = −7V
Pin numbers are for TO-220 package.

**Figure 33. Negative Boost**

## UNDERVOLTAGE LOCKOUT

In some applications it is desirable to keep the regulator off until the input voltage reaches a certain threshold. An undervoltage lockout circuit which accomplishes this task is shown in Figure 34, while Figure 35 shows the same circuit applied to a buck-boost configuration. These circuits keep the regulator off until the input voltage reaches a predetermined level.

$$V_{TH} \approx V_{Z1} + 2V_{BE} \text{ (Q1)} \quad (16)$$

## DELAYED STARTUP

The $\overline{\text{ON}}$ /OFF pin can be used to provide a delayed startup feature as shown in Figure 36. With an input voltage of 20V and for the part values shown, the circuit provides approximately 10 ms of delay time before the circuit begins switching. Increasing the RC time constant can provide longer delay times. But excessively large RC time constants can cause problems with input voltages that are high in 60 Hz or 120 Hz ripple, by coupling the ripple into the $\overline{\text{ON}}$ /OFF pin.

## ADJUSTABLE OUTPUT, LOW-RIPPLE POWER SUPPLY

A 1A power supply that features an adjustable output voltage is shown in Figure 37. An additional L-C filter that reduces the output ripple by a factor of 10 or more is included in this circuit.


Copyright © 1999–2013, Texas Instruments Incorporated

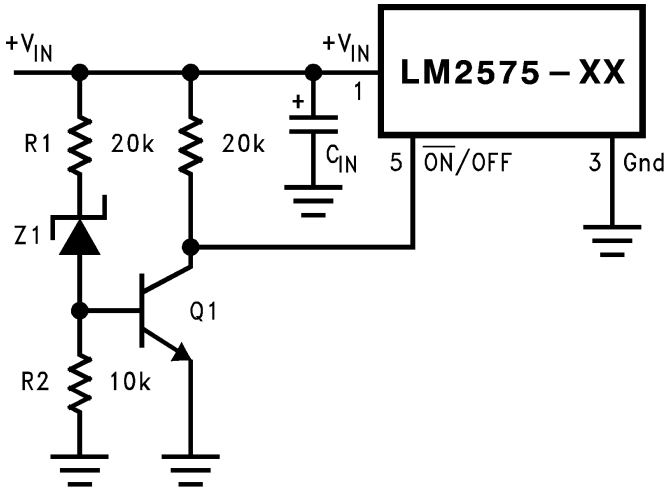


Complete circuit not shown.
Pin numbers are for the TO-220 package.

**Figure 34. Undervoltage Lockout for Buck Circuit**

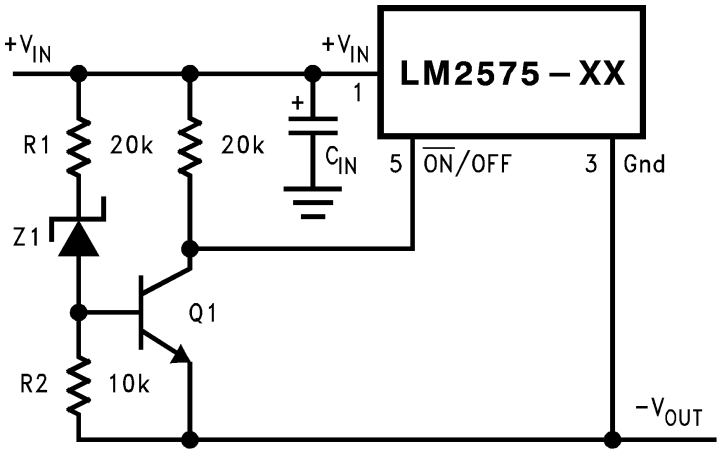


Complete circuit not shown (see Figure 32).
Pin numbers are for the TO-220 package.

**Figure 35. Undervoltage Lockout for Buck-Boost Circuit**

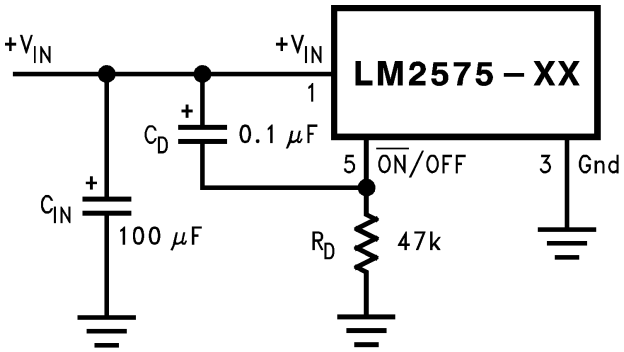


Complete circuit not shown.
Pin numbers are for the TO-220 package.

**Figure 36. Delayed Startup**

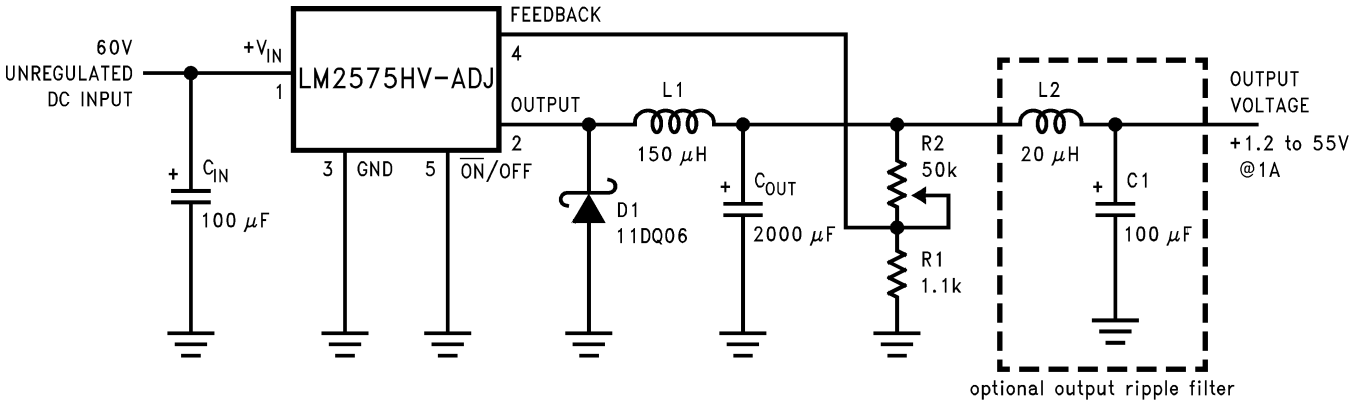


Pin numbers are for the TO-220 package.

**Figure 37. 1.2V to 55V Adjustable 1A Power Supply with Low Output Ripple**

## Definition of Terms

**BUCK REGULATOR** A switching regulator topology in which a higher voltage is converted to a lower voltage. Also known as a step-down switching regulator.

**BUCK-BOOST REGULATOR** A switching regulator topology in which a positive voltage is converted to a negative voltage without a transformer.

**DUTY CYCLE (D)** Ratio of the output switch's on-time to the oscillator period.

*for buck regulator* $$D = \frac{t_{ON}}{T} = \frac{V_{OUT}}{V_{IN}}$$

*for buck-boost regulator* $$D = \frac{t_{ON}}{T} = \frac{|V_O|}{|V_O| + V_{IN}} \quad (17)$$

**CATCH DIODE OR CURRENT STEERING DIODE** The diode which provides a return path for the load current when the LM2575 switch is OFF.

**EFFICIENCY (η)** The proportion of input power actually delivered to the load.

$$\eta = \frac{P_{OUT}}{P_{IN}} = \frac{P_{OUT}}{P_{OUT} + P_{LOSS}} \quad (18)$$

**CAPACITOR EQUIVALENT SERIES RESISTANCE (ESR)** The purely resistive component of a real capacitor's impedance (see Figure 38). It causes power loss resulting in capacitor heating, which directly affects the capacitor's operating lifetime. When used as a switching regulator output filter, higher ESR values result in higher output ripple voltages.

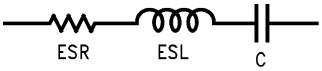


**Figure 38. Simple Model of a Real Capacitor**

Most standard aluminum electrolytic capacitors in the 100 µF–1000 µF range have 0.5Ω to 0.1Ω ESR. Higher-grade capacitors ("low-ESR", "high-frequency", or "low-inductance"') in the 100 µF–1000 µF range generally have ESR of less than 0.15Ω.

**EQUIVALENT SERIES INDUCTANCE (ESL)** The pure inductance component of a capacitor (see Figure 38). The amount of inductance is determined to a large extent on the capacitor's construction. In a buck regulator, this unwanted inductance causes voltage spikes to appear on the output.

**OUTPUT RIPPLE VOLTAGE** The AC component of the switching regulator's output voltage. It is usually dominated by the output capacitor's ESR multiplied by the inductor's ripple current ($\Delta I_{IND}$). The peak-to-peak value of this sawtooth ripple current can be determined by reading INDUCTOR RIPPLE CURRENT.


Copyright © 1999–2013, Texas Instruments Incorporated

**CAPACITOR RIPPLE CURRENT** RMS value of the maximum allowable alternating current at which a capacitor can be operated continuously at a specified temperature.

**STANDBY QUIESCENT CURRENT ($I_{STBY}$)** Supply current required by the LM2575 when in the standby mode ($\overline{ON}$ /OFF pin is driven to TTL-high voltage, thus turning the output switch OFF).

**INDUCTOR RIPPLE CURRENT ($\Delta I_{IND}$)** The peak-to-peak value of the inductor current waveform, typically a sawtooth waveform when the regulator is operating in the continuous mode (vs. discontinuous mode).

**CONTINUOUS/DISCONTINUOUS MODE OPERATION** Relates to the inductor current. In the continuous mode, the inductor current is always flowing and never drops to zero, vs. the discontinuous mode, where the inductor current drops to zero for a period of time in the normal switching cycle.

**INDUCTOR SATURATION** The condition which exists when an inductor cannot hold any more magnetic flux. When an inductor saturates, the inductor appears less inductive and the resistive component dominates. Inductor current is then limited only by the DC resistance of the wire and the available source current.

**OPERATING VOLT MICROSECOND CONSTANT ($E \bullet T_{op}$)** The product (in Volt•µs) of the voltage applied to the inductor and the time the voltage is applied. This $E \bullet T_{op}$ constant is a measure of the energy handling capability of an inductor and is dependent upon the type of core, the core area, the number of turns, and the duty cycle.

## REVISION HISTORY

| Changes from Revision D (April 2013) to Revision E | Page |
|---|---|
| • Changed layout of National Data Sheet to TI format | 25 |


Copyright © 1999–2013, Texas Instruments Incorporated

## PACKAGING INFORMATION

| Orderable Device | Status (1) | Package Type | Package Drawing | Pins | Package Qty | Eco Plan (2) | Lead finish/ Ball material (6) | MSL Peak Temp (3) | Op Temp (°C) | Device Marking (4/5) | Samples |
|---|---|---|---|---|---|---|---|---|---|---|---|
| LM2575HVS-12 | NRND | DDPAK/ TO-263 | KTT | 5 | 45 | Non-RoHS & Green | Call TI | Level-3-235C-168 HR | -40 to 125 | LM2575HVS -12 P+ | |
| LM2575HVS-12/NOPB | ACTIVE | DDPAK/ TO-263 | KTT | 5 | 45 | RoHS-Exempt & Green | SN | Level-3-245C-168 HR | -40 to 125 | LM2575HVS -12 P+ | Samples |
| LM2575HVS-15 | NRND | DDPAK/ TO-263 | KTT | 5 | 45 | Non-RoHS & Green | Call TI | Level-3-235C-168 HR | -40 to 125 | LM2575HVS -15 P+ | |
| LM2575HVS-15/NOPB | ACTIVE | DDPAK/ TO-263 | KTT | 5 | 45 | RoHS-Exempt & Green | SN | Level-3-245C-168 HR | -40 to 125 | LM2575HVS -15 P+ | Samples |
| LM2575HVS-3.3/NOPB | ACTIVE | DDPAK/ TO-263 | KTT | 5 | 45 | RoHS-Exempt & Green | SN | Level-3-245C-168 HR | -40 to 125 | LM2575HVS -3.3 P+ | Samples |
| LM2575HVS-5.0 | NRND | DDPAK/ TO-263 | KTT | 5 | 45 | Non-RoHS & Green | Call TI | Level-3-235C-168 HR | -40 to 125 | LM2575HVS -5.0 P+ | |
| LM2575HVS-5.0/NOPB | ACTIVE | DDPAK/ TO-263 | KTT | 5 | 45 | RoHS-Exempt & Green | SN | Level-3-245C-168 HR | -40 to 125 | LM2575HVS -5.0 P+ | Samples |
| LM2575HVS-ADJ | NRND | DDPAK/ TO-263 | KTT | 5 | 45 | Non-RoHS & Green | Call TI | Level-3-235C-168 HR | -40 to 125 | LM2575HVS -ADJ P+ | |
| LM2575HVS-ADJ/NOPB | ACTIVE | DDPAK/ TO-263 | KTT | 5 | 45 | RoHS-Exempt & Green | SN | Level-3-245C-168 HR | -40 to 125 | LM2575HVS -ADJ P+ | Samples |
| LM2575HVSX-15/NOPB | ACTIVE | DDPAK/ TO-263 | KTT | 5 | 500 | RoHS-Exempt & Green | SN | Level-3-245C-168 HR | -40 to 125 | LM2575HVS -15 P+ | Samples |
| LM2575HVSX-3.3/NOPB | ACTIVE | DDPAK/ TO-263 | KTT | 5 | 500 | RoHS-Exempt & Green | SN | Level-3-245C-168 HR | -40 to 125 | LM2575HVS -3.3 P+ | Samples |
| LM2575HVSX-5.0 | NRND | DDPAK/ TO-263 | KTT | 5 | 500 | Non-RoHS & Green | Call TI | Level-3-235C-168 HR | -40 to 125 | LM2575HVS -5.0 P+ | |
| LM2575HVSX-5.0/NOPB | ACTIVE | DDPAK/ TO-263 | KTT | 5 | 500 | RoHS-Exempt & Green | SN | Level-3-245C-168 HR | -40 to 125 | LM2575HVS -5.0 P+ | Samples |
| LM2575HVSX-ADJ | NRND | DDPAK/ TO-263 | KTT | 5 | 500 | Non-RoHS & Green | Call TI | Level-3-235C-168 HR | -40 to 125 | LM2575HVS -ADJ P+ | |
| LM2575HVSX-ADJ/NOPB | ACTIVE | DDPAK/ TO-263 | KTT | 5 | 500 | RoHS-Exempt & Green | SN | Level-3-245C-168 HR | -40 to 125 | LM2575HVS -ADJ P+ | Samples |
| LM2575HVT-12 | NRND | TO-220 | KC | 5 | 45 | Non-RoHS & Green | Call TI | Level-1-NA-UNLIM | -40 to 125 | LM2575HVT -12 P+ | |

| Orderable Device | Status (1) | Package Type | Package Drawing | Pins | Package Qty | Eco Plan (2) | Lead finish/ Ball material (6) | MSL Peak Temp (3) | Op Temp (°C) | Device Marking (4/5) | Samples |
|---|---|---|---|---|---|---|---|---|---|---|---|
| LM2575HVT-12/LB03 | NRND | TO-220 | NDH | 5 | 45 | Non-RoHS & Green | Call TI | Level-1-NA-UNLIM | | LM2575HVT -12 P+ | |
| LM2575HVT-12/LF03 | ACTIVE | TO-220 | NDH | 5 | 45 | RoHS & Green | SN | Level-1-NA-UNLIM | | LM2575HVT -12 P+ | Samples |
| LM2575HVT-12/NOPB | ACTIVE | TO-220 | KC | 5 | 45 | RoHS & Green | SN | Level-1-NA-UNLIM | -40 to 125 | LM2575HVT -12 P+ | Samples |
| LM2575HVT-15 | NRND | TO-220 | KC | 5 | 45 | Non-RoHS & Green | Call TI | Level-1-NA-UNLIM | -40 to 125 | LM2575HVT -15 P+ | |
| LM2575HVT-15/LB03 | NRND | TO-220 | NDH | 5 | 45 | Non-RoHS & Green | Call TI | Level-1-NA-UNLIM | | LM2575HVT -15 P+ | |
| LM2575HVT-15/LF03 | ACTIVE | TO-220 | NDH | 5 | 45 | RoHS & Green | SN | Level-1-NA-UNLIM | | LM2575HVT -15 P+ | Samples |
| LM2575HVT-15/NOPB | ACTIVE | TO-220 | KC | 5 | 45 | RoHS & Green | SN | Level-1-NA-UNLIM | -40 to 125 | LM2575HVT -15 P+ | Samples |
| LM2575HVT-3.3/LF03 | ACTIVE | TO-220 | NDH | 5 | 45 | RoHS & Green | SN | Level-1-NA-UNLIM | | LM2575HVT -3.3 P+ | Samples |
| LM2575HVT-3.3/NOPB | ACTIVE | TO-220 | KC | 5 | 45 | RoHS & Green | SN | Level-1-NA-UNLIM | -40 to 125 | LM2575HVT -3.3 P+ | Samples |
| LM2575HVT-5.0 | NRND | TO-220 | KC | 5 | 45 | Non-RoHS & Green | Call TI | Level-1-NA-UNLIM | -40 to 125 | LM2575HVT -5.0 P+ | |
| LM2575HVT-5.0/LB03 | NRND | TO-220 | NDH | 5 | 45 | Non-RoHS & Green | Call TI | Level-1-NA-UNLIM | | LM2575HVT -5.0 P+ | |
| LM2575HVT-5.0/LF03 | ACTIVE | TO-220 | NDH | 5 | 45 | RoHS & Green | SN | Level-1-NA-UNLIM | | LM2575HVT -5.0 P+ | Samples |
| LM2575HVT-5.0/NOPB | ACTIVE | TO-220 | KC | 5 | 45 | RoHS & Green | SN | Level-1-NA-UNLIM | -40 to 125 | LM2575HVT -5.0 P+ | Samples |
| LM2575HVT-ADJ | NRND | TO-220 | KC | 5 | 45 | Non-RoHS & Green | Call TI | Level-1-NA-UNLIM | -40 to 125 | LM2575HVT -ADJ P+ | |
| LM2575HVT-ADJ/LB03 | NRND | TO-220 | NDH | 5 | 45 | Non-RoHS & Green | Call TI | Level-1-NA-UNLIM | | LM2575HVT -ADJ P+ | |
| LM2575HVT-ADJ/LF03 | ACTIVE | TO-220 | NDH | 5 | 45 | RoHS & Green | SN | Level-1-NA-UNLIM | | LM2575HVT -ADJ P+ | Samples |
| LM2575HVT-ADJ/NOPB | ACTIVE | TO-220 | KC | 5 | 45 | RoHS & Green | SN | Level-1-NA-UNLIM | -40 to 125 | LM2575HVT -ADJ P+ | Samples |

| Orderable Device | Status (1) | Package Type | Package Drawing | Pins | Package Qty | Eco Plan (2) | Lead finish/ Ball material (6) | MSL Peak Temp (3) | Op Temp (°C) | Device Marking (4/5) | Samples |
|---|---|---|---|---|---|---|---|---|---|---|---|
| LM2575M-5.0 | NRND | SOIC | DW | 24 | 30 | Non-RoHS & Green | Call TI | Level-3-260C-168 HR | -40 to 125 | LM2575M -5.0 P+ | |
| LM2575M-5.0/NOPB | ACTIVE | SOIC | DW | 24 | 30 | RoHS & Green | SN | Level-3-260C-168 HR | -40 to 125 | LM2575M -5.0 P+ | Samples |
| LM2575M-ADJ/NOPB | ACTIVE | SOIC | DW | 24 | 30 | RoHS & Green | SN | Level-3-260C-168 HR | -40 to 125 | LM2575M -ADJ P+ | Samples |
| LM2575MX-5.0/NOPB | ACTIVE | SOIC | DW | 24 | 1000 | RoHS & Green | SN | Level-3-260C-168 HR | -40 to 125 | LM2575M -5.0 P+ | Samples |
| LM2575MX-ADJ/NOPB | ACTIVE | SOIC | DW | 24 | 1000 | RoHS & Green | SN | Level-3-260C-168 HR | -40 to 125 | LM2575M -ADJ P+ | Samples |
| LM2575S-12/NOPB | ACTIVE | DDPAK/ TO-263 | KTT | 5 | 45 | RoHS-Exempt & Green | SN | Level-3-245C-168 HR | -40 to 125 | LM2575S -12 P+ | Samples |
| LM2575S-15/NOPB | ACTIVE | DDPAK/ TO-263 | KTT | 5 | 45 | RoHS-Exempt & Green | SN | Level-3-245C-168 HR | -40 to 125 | LM2575S -15 P+ | Samples |
| LM2575S-3.3 | NRND | DDPAK/ TO-263 | KTT | 5 | 45 | Non-RoHS & Green | Call TI | Level-3-235C-168 HR | -40 to 125 | LM2575S -3.3 P+ | |
| LM2575S-3.3/NOPB | ACTIVE | DDPAK/ TO-263 | KTT | 5 | 45 | RoHS-Exempt & Green | SN | Level-3-245C-168 HR | -40 to 125 | LM2575S -3.3 P+ | Samples |
| LM2575S-5.0 | NRND | DDPAK/ TO-263 | KTT | 5 | 45 | Non-RoHS & Green | Call TI | Level-3-235C-168 HR | -40 to 125 | LM2575S -5.0 P+ | |
| LM2575S-5.0/NOPB | ACTIVE | DDPAK/ TO-263 | KTT | 5 | 45 | RoHS-Exempt & Green | SN | Level-3-245C-168 HR | -40 to 125 | LM2575S -5.0 P+ | Samples |
| LM2575S-ADJ | NRND | DDPAK/ TO-263 | KTT | 5 | 45 | Non-RoHS & Green | Call TI | Level-3-235C-168 HR | -40 to 125 | LM2575S -ADJ P+ | |
| LM2575S-ADJ/NOPB | ACTIVE | DDPAK/ TO-263 | KTT | 5 | 45 | RoHS-Exempt & Green | SN | Level-3-245C-168 HR | -40 to 125 | LM2575S -ADJ P+ | Samples |
| LM2575SX-12/NOPB | ACTIVE | DDPAK/ TO-263 | KTT | 5 | 500 | RoHS-Exempt & Green | SN | Level-3-245C-168 HR | -40 to 125 | LM2575S -12 P+ | Samples |
| LM2575SX-15/NOPB | ACTIVE | DDPAK/ TO-263 | KTT | 5 | 500 | RoHS-Exempt & Green | SN | Level-3-245C-168 HR | -40 to 125 | LM2575S -15 P+ | Samples |
| LM2575SX-3.3/NOPB | ACTIVE | DDPAK/ TO-263 | KTT | 5 | 500 | RoHS-Exempt & Green | SN | Level-3-245C-168 HR | -40 to 125 | LM2575S -3.3 P+ | Samples |
| LM2575SX-5.0/NOPB | ACTIVE | DDPAK/ TO-263 | KTT | 5 | 500 | RoHS-Exempt & Green | SN | Level-3-245C-168 HR | -40 to 125 | LM2575S -5.0 P+ | Samples |

| Orderable Device | Status (1) | Package Type | Package Drawing | Pins | Package Qty | Eco Plan (2) | Lead finish/ Ball material (6) | MSL Peak Temp (3) | Op Temp (°C) | Device Marking (4/5) | Samples |
|---|---|---|---|---|---|---|---|---|---|---|---|
| LM2575SX-ADJ | NRND | DDPAK/ TO-263 | KTT | 5 | 500 | Non-RoHS & Green | Call TI | Level-3-235C-168 HR | -40 to 125 | LM2575S -ADJ P+ | |
| LM2575SX-ADJ/NOPB | ACTIVE | DDPAK/ TO-263 | KTT | 5 | 500 | RoHS-Exempt & Green | SN | Level-3-245C-168 HR | -40 to 125 | LM2575S -ADJ P+ | Samples |
| LM2575T-12 | NRND | TO-220 | KC | 5 | 45 | Non-RoHS & Green | Call TI | Level-1-NA-UNLIM | -40 to 125 | LM2575T -12 P+ | |
| LM2575T-12/LF03 | ACTIVE | TO-220 | NDH | 5 | 45 | RoHS & Green | SN | Level-1-NA-UNLIM | | LM2575T -12 P+ | Samples |
| LM2575T-12/NOPB | ACTIVE | TO-220 | KC | 5 | 45 | RoHS & Green | SN | Level-1-NA-UNLIM | -40 to 125 | LM2575T -12 P+ | Samples |
| LM2575T-15 | NRND | TO-220 | KC | 5 | 45 | Non-RoHS & Green | Call TI | Level-1-NA-UNLIM | -40 to 125 | LM2575T -15 P+ | |
| LM2575T-15/LF03 | ACTIVE | TO-220 | NDH | 5 | 45 | RoHS & Green | SN | Level-1-NA-UNLIM | | LM2575T -15 P+ | Samples |
| LM2575T-15/NOPB | ACTIVE | TO-220 | KC | 5 | 45 | RoHS & Green | SN | Level-1-NA-UNLIM | -40 to 125 | LM2575T -15 P+ | Samples |
| LM2575T-3.3/LF03 | ACTIVE | TO-220 | NDH | 5 | 45 | RoHS & Green | SN | Level-1-NA-UNLIM | | LM2575T -3.3 P+ | Samples |
| LM2575T-3.3/NOPB | ACTIVE | TO-220 | KC | 5 | 45 | RoHS & Green | SN | Level-1-NA-UNLIM | -40 to 125 | LM2575T -3.3 P+ | Samples |
| LM2575T-5.0 | NRND | TO-220 | KC | 5 | 45 | Non-RoHS & Green | Call TI | Level-1-NA-UNLIM | -40 to 125 | LM2575T -5.0 P+ | |
| LM2575T-5.0/LB03 | NRND | TO-220 | NDH | 5 | 45 | Non-RoHS & Green | Call TI | Level-1-NA-UNLIM | | LM2575T -5.0 P+ | |
| LM2575T-5.0/LF03 | ACTIVE | TO-220 | NDH | 5 | 45 | RoHS & Green | SN | Level-1-NA-UNLIM | | LM2575T -5.0 P+ | Samples |
| LM2575T-5.0/NOPB | ACTIVE | TO-220 | KC | 5 | 45 | RoHS & Green | SN | Level-1-NA-UNLIM | -40 to 125 | LM2575T -5.0 P+ | Samples |
| LM2575T-ADJ | NRND | TO-220 | KC | 5 | 45 | Non-RoHS & Green | Call TI | Level-1-NA-UNLIM | -40 to 125 | LM2575T -ADJ P+ | |
| LM2575T-ADJ/LB03 | NRND | TO-220 | NDH | 5 | 45 | Non-RoHS & Green | Call TI | Level-1-NA-UNLIM | | LM2575T -ADJ P+ | |
| LM2575T-ADJ/LF02 | ACTIVE | TO-220 | NEB | 5 | 45 | RoHS & Green | SN | Level-1-NA-UNLIM | | LM2575T -ADJ P+ | Samples |
| LM2575T-ADJ/LF03 | ACTIVE | TO-220 | NDH | 5 | 45 | RoHS & Green | SN | Level-1-NA-UNLIM | | LM2575T | Samples |

| Orderable Device | Status (1) | Package Type | Package Drawing | Pins | Package Qty | Eco Plan (2) | Lead finish/ Ball material (6) | MSL Peak Temp (3) | Op Temp (°C) | Device Marking (4/5) | Samples |
|---|---|---|---|---|---|---|---|---|---|---|---|
| | | | | | | | | | | -ADJ P+ | |
| LM2575T-ADJ/NOPB | ACTIVE | TO-220 | KC | 5 | 45 | RoHS & Green | SN | Level-1-NA-UNLIM | -40 to 125 | LM2575T -ADJ P+ | Samples |

(1) The marketing status values are defined as follows:
**ACTIVE:** Product device recommended for new designs.
**LIFEBUY:** TI has announced that the device will be discontinued, and a lifetime-buy period is in effect.
**NRND:** Not recommended for new designs. Device is in production to support existing customers, but TI does not recommend using this part in a new design.
**PREVIEW:** Device has been announced but is not in production. Samples may or may not be available.
**OBSOLETE:** TI has discontinued the production of the device.

(2) **RoHS:** TI defines "RoHS" to mean semiconductor products that are compliant with the current EU RoHS requirements for all 10 RoHS substances, including the requirement that RoHS substance do not exceed 0.1% by weight in homogeneous materials. Where designed to be soldered at high temperatures, "RoHS" products are suitable for use in specified lead-free processes. TI may reference these types of products as "Pb-Free".
**RoHS Exempt:** TI defines "RoHS Exempt" to mean products that contain lead but are compliant with EU RoHS pursuant to a specific EU RoHS exemption.
**Green:** TI defines "Green" to mean the content of Chlorine (Cl) and Bromine (Br) based flame retardants meet JS709B low halogen requirements of <=1000ppm threshold. Antimony trioxide based flame retardants must also meet the <=1000ppm threshold requirement.

(3) MSL, Peak Temp. - The Moisture Sensitivity Level rating according to the JEDEC industry standard classifications, and peak solder temperature.

(4) There may be additional marking, which relates to the logo, the lot trace code information, or the environmental category on the device.

(5) Multiple Device Markings will be inside parentheses. Only one Device Marking contained in parentheses and separated by a "~" will appear on a device. If a line is indented then it is a continuation of the previous line and the two combined represent the entire Device Marking for that device.

(6) Lead finish/Ball material - Orderable Devices may have multiple material finish options. Finish options are separated by a vertical ruled line. Lead finish/Ball material values may wrap to two lines if the finish value exceeds the maximum column width.

**Important Information and Disclaimer:**The information provided on this page represents TI's knowledge and belief as of the date that it is provided. TI bases its knowledge and belief on information provided by third parties, and makes no representation or warranty as to the accuracy of such information. Efforts are underway to better integrate information from third parties. TI has taken and continues to take reasonable steps to provide representative and accurate information but may not have conducted destructive testing or chemical analysis on incoming materials and chemicals. TI and TI suppliers consider certain information to be proprietary, and thus CAS numbers and other limited information may not be available for release.

In no event shall TI's liability arising out of such information exceed the total purchase price of the TI part(s) at issue in this document sold by TI to Customer on an annual basis.

## TAPE AND REEL INFORMATION

**REEL DIMENSIONS**

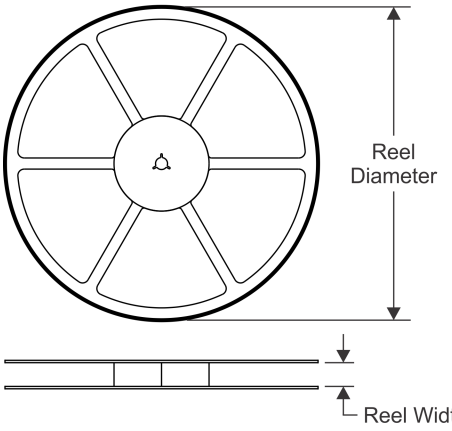


**TAPE DIMENSIONS**

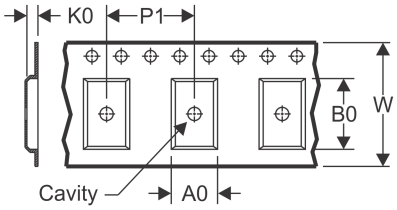


| | |
|---|---|
| A0 | Dimension designed to accommodate the component width |
| B0 | Dimension designed to accommodate the component length |
| K0 | Dimension designed to accommodate the component thickness |
| W | Overall width of the carrier tape |
| P1 | Pitch between successive cavity centers |

**QUADRANT ASSIGNMENTS FOR PIN 1 ORIENTATION IN TAPE**

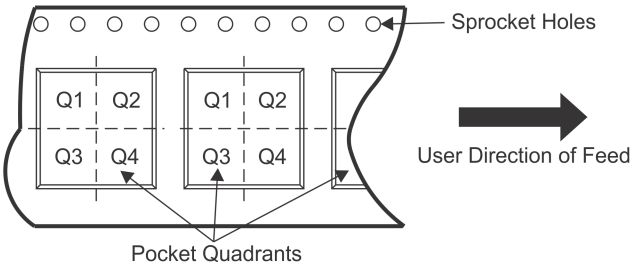


*All dimensions are nominal

| Device | Package Type | Package Drawing | Pins | SPQ | Reel Diameter (mm) | Reel Width W1 (mm) | A0 (mm) | B0 (mm) | K0 (mm) | P1 (mm) | W (mm) | Pin1 Quadrant |
|---|---|---|---|---|---|---|---|---|---|---|---|---|
| LM2575HVSX-15/NOPB | DDPAK/ TO-263 | KTT | 5 | 500 | 330.0 | 24.4 | 10.75 | 14.85 | 5.0 | 16.0 | 24.0 | Q2 |
| LM2575HVSX-3.3/NOPB | DDPAK/ TO-263 | KTT | 5 | 500 | 330.0 | 24.4 | 10.75 | 14.85 | 5.0 | 16.0 | 24.0 | Q2 |
| LM2575HVSX-5.0 | DDPAK/ TO-263 | KTT | 5 | 500 | 330.0 | 24.4 | 10.75 | 14.85 | 5.0 | 16.0 | 24.0 | Q2 |
| LM2575HVSX-5.0/NOPB | DDPAK/ TO-263 | KTT | 5 | 500 | 330.0 | 24.4 | 10.75 | 14.85 | 5.0 | 16.0 | 24.0 | Q2 |
| LM2575HVSX-ADJ | DDPAK/ TO-263 | KTT | 5 | 500 | 330.0 | 24.4 | 10.75 | 14.85 | 5.0 | 16.0 | 24.0 | Q2 |
| LM2575HVSX-ADJ/NOPB | DDPAK/ TO-263 | KTT | 5 | 500 | 330.0 | 24.4 | 10.75 | 14.85 | 5.0 | 16.0 | 24.0 | Q2 |
| LM2575MX-5.0/NOPB | SOIC | DW | 24 | 1000 | 330.0 | 24.4 | 10.8 | 15.9 | 3.2 | 12.0 | 24.0 | Q1 |
| LM2575MX-ADJ/NOPB | SOIC | DW | 24 | 1000 | 330.0 | 24.4 | 10.8 | 15.9 | 3.2 | 12.0 | 24.0 | Q1 |
| LM2575SX-12/NOPB | DDPAK/ TO-263 | KTT | 5 | 500 | 330.0 | 24.4 | 10.75 | 14.85 | 5.0 | 16.0 | 24.0 | Q2 |
| LM2575SX-15/NOPB | DDPAK/ TO-263 | KTT | 5 | 500 | 330.0 | 24.4 | 10.75 | 14.85 | 5.0 | 16.0 | 24.0 | Q2 |
| LM2575SX-3.3/NOPB | DDPAK/ TO-263 | KTT | 5 | 500 | 330.0 | 24.4 | 10.75 | 14.85 | 5.0 | 16.0 | 24.0 | Q2 |
| LM2575SX-5.0/NOPB | DDPAK/ | KTT | 5 | 500 | 330.0 | 24.4 | 10.75 | 14.85 | 5.0 | 16.0 | 24.0 | Q2 |

| Device | Package Type | Package Drawing | Pins | SPQ | Reel Diameter (mm) | Reel Width W1 (mm) | A0 (mm) | B0 (mm) | K0 (mm) | P1 (mm) | W (mm) | Pin1 Quadrant |
|---|---|---|---|---|---|---|---|---|---|---|---|---|
| | TO-263 | | | | | | | | | | | |
| LM2575SX-ADJ | DDPAK/ TO-263 | KTT | 5 | 500 | 330.0 | 24.4 | 10.75 | 14.85 | 5.0 | 16.0 | 24.0 | Q2 |
| LM2575SX-ADJ/NOPB | DDPAK/ TO-263 | KTT | 5 | 500 | 330.0 | 24.4 | 10.75 | 14.85 | 5.0 | 16.0 | 24.0 | Q2 |

**TAPE AND REEL BOX DIMENSIONS**

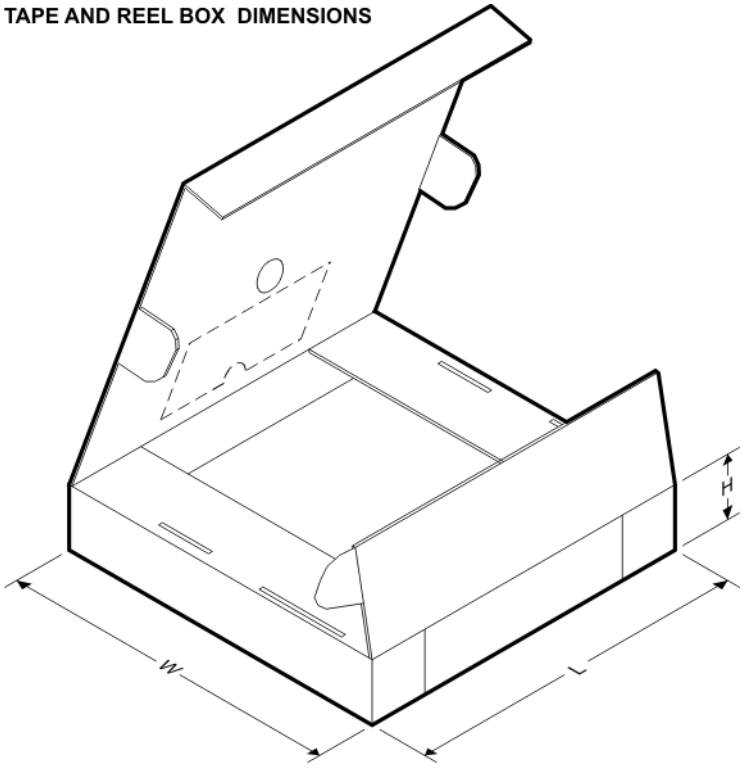


*All dimensions are nominal

| Device | Package Type | Package Drawing | Pins | SPQ | Length (mm) | Width (mm) | Height (mm) |
|---|---|---|---|---|---|---|---|
| LM2575HVSX-15/NOPB | DDPAK/TO-263 | KTT | 5 | 500 | 367.0 | 367.0 | 45.0 |
| LM2575HVSX-3.3/NOPB | DDPAK/TO-263 | KTT | 5 | 500 | 367.0 | 367.0 | 45.0 |
| LM2575HVSX-5.0 | DDPAK/TO-263 | KTT | 5 | 500 | 367.0 | 367.0 | 45.0 |
| LM2575HVSX-5.0/NOPB | DDPAK/TO-263 | KTT | 5 | 500 | 367.0 | 367.0 | 45.0 |
| LM2575HVSX-ADJ | DDPAK/TO-263 | KTT | 5 | 500 | 367.0 | 367.0 | 45.0 |
| LM2575HVSX-ADJ/NOPB | DDPAK/TO-263 | KTT | 5 | 500 | 367.0 | 367.0 | 45.0 |
| LM2575MX-5.0/NOPB | SOIC | DW | 24 | 1000 | 367.0 | 367.0 | 45.0 |
| LM2575MX-ADJ/NOPB | SOIC | DW | 24 | 1000 | 367.0 | 367.0 | 45.0 |
| LM2575SX-12/NOPB | DDPAK/TO-263 | KTT | 5 | 500 | 367.0 | 367.0 | 45.0 |
| LM2575SX-15/NOPB | DDPAK/TO-263 | KTT | 5 | 500 | 367.0 | 367.0 | 45.0 |
| LM2575SX-3.3/NOPB | DDPAK/TO-263 | KTT | 5 | 500 | 367.0 | 367.0 | 45.0 |
| LM2575SX-5.0/NOPB | DDPAK/TO-263 | KTT | 5 | 500 | 367.0 | 367.0 | 45.0 |

| Device | Package Type | Package Drawing | Pins | SPQ | Length (mm) | Width (mm) | Height (mm) |
|---|---|---|---|---|---|---|---|
| LM2575SX-ADJ | DDPAK/TO-263 | KTT | 5 | 500 | 367.0 | 367.0 | 45.0 |
| LM2575SX-ADJ/NOPB | DDPAK/TO-263 | KTT | 5 | 500 | 367.0 | 367.0 | 45.0 |

## TUBE

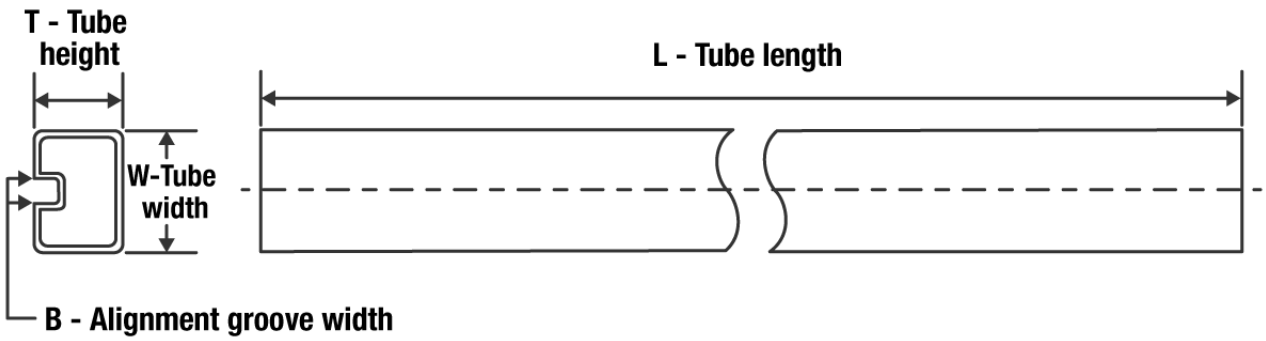


*All dimensions are nominal

| Device | Package Name | Package Type | Pins | SPQ | L (mm) | W (mm) | T (µm) | B (mm) |
|---|---|---|---|---|---|---|---|---|
| LM2575HVS-12 | KTT | TO-263 | 5 | 45 | 502 | 25 | 8204.2 | 9.19 |
| LM2575HVS-12 | KTT | TO-263 | 5 | 45 | 502 | 25 | 8204.2 | 9.19 |
| LM2575HVS-12/NOPB | KTT | TO-263 | 5 | 45 | 502 | 25 | 8204.2 | 9.19 |
| LM2575HVS-15 | KTT | TO-263 | 5 | 45 | 502 | 25 | 8204.2 | 9.19 |
| LM2575HVS-15 | KTT | TO-263 | 5 | 45 | 502 | 25 | 8204.2 | 9.19 |
| LM2575HVS-15/NOPB | KTT | TO-263 | 5 | 45 | 502 | 25 | 8204.2 | 9.19 |
| LM2575HVS-3.3/NOPB | KTT | TO-263 | 5 | 45 | 502 | 25 | 8204.2 | 9.19 |
| LM2575HVS-5.0 | KTT | TO-263 | 5 | 45 | 502 | 25 | 8204.2 | 9.19 |
| LM2575HVS-5.0 | KTT | TO-263 | 5 | 45 | 502 | 25 | 8204.2 | 9.19 |
| LM2575HVS-5.0/NOPB | KTT | TO-263 | 5 | 45 | 502 | 25 | 8204.2 | 9.19 |
| LM2575HVS-ADJ | KTT | TO-263 | 5 | 45 | 502 | 25 | 8204.2 | 9.19 |
| LM2575HVS-ADJ | KTT | TO-263 | 5 | 45 | 502 | 25 | 8204.2 | 9.19 |
| LM2575HVS-ADJ/NOPB | KTT | TO-263 | 5 | 45 | 502 | 25 | 8204.2 | 9.19 |
| LM2575HVT-12 | KC | TO-220 | 5 | 45 | 502 | 33 | 6985 | 4.06 |
| LM2575HVT-12 | KC | TO-220 | 5 | 45 | 502 | 33 | 6985 | 4.06 |
| LM2575HVT-12/LB03 | NDH | TO-220 | 5 | 45 | 502 | 30 | 30048.2 | 10.74 |
| LM2575HVT-12/LB03 | NDH | TO-220 | 5 | 45 | 502 | 30 | 30048.2 | 10.74 |
| LM2575HVT-12/LF03 | NDH | TO-220 | 5 | 45 | 502 | 30 | 30048.2 | 10.74 |
| LM2575HVT-12/NOPB | KC | TO-220 | 5 | 45 | 502 | 33 | 6985 | 4.06 |
| LM2575HVT-15 | KC | TO-220 | 5 | 45 | 502 | 33 | 6985 | 4.06 |
| LM2575HVT-15 | KC | TO-220 | 5 | 45 | 502 | 33 | 6985 | 4.06 |
| LM2575HVT-15/LB03 | NDH | TO-220 | 5 | 45 | 502 | 30 | 30048.2 | 10.74 |
| LM2575HVT-15/LB03 | NDH | TO-220 | 5 | 45 | 502 | 30 | 30048.2 | 10.74 |
| LM2575HVT-15/LF03 | NDH | TO-220 | 5 | 45 | 502 | 30 | 30048.2 | 10.74 |
| LM2575HVT-15/NOPB | KC | TO-220 | 5 | 45 | 502 | 33 | 6985 | 4.06 |
| LM2575HVT-3.3/LF03 | NDH | TO-220 | 5 | 45 | 502 | 30 | 30048.2 | 10.74 |
| LM2575HVT-3.3/NOPB | KC | TO-220 | 5 | 45 | 502 | 33 | 6985 | 4.06 |
| LM2575HVT-5.0 | KC | TO-220 | 5 | 45 | 502 | 33 | 6985 | 4.06 |

| Device | Package Name | Package Type | Pins | SPQ | L (mm) | W (mm) | T (µm) | B (mm) |
|---|---|---|---|---|---|---|---|---|
| LM2575HVT-5.0 | KC | TO-220 | 5 | 45 | 502 | 33 | 6985 | 4.06 |
| LM2575HVT-5.0/LB03 | NDH | TO-220 | 5 | 45 | 502 | 30 | 30048.2 | 10.74 |
| LM2575HVT-5.0/LB03 | NDH | TO-220 | 5 | 45 | 502 | 30 | 30048.2 | 10.74 |
| LM2575HVT-5.0/LF03 | NDH | TO-220 | 5 | 45 | 502 | 30 | 30048.2 | 10.74 |
| LM2575HVT-5.0/NOPB | KC | TO-220 | 5 | 45 | 502 | 33 | 6985 | 4.06 |
| LM2575HVT-ADJ | KC | TO-220 | 5 | 45 | 502 | 33 | 6985 | 4.06 |
| LM2575HVT-ADJ | KC | TO-220 | 5 | 45 | 502 | 33 | 6985 | 4.06 |
| LM2575HVT-ADJ/LB03 | NDH | TO-220 | 5 | 45 | 502 | 30 | 30048.2 | 10.74 |
| LM2575HVT-ADJ/LB03 | NDH | TO-220 | 5 | 45 | 502 | 30 | 30048.2 | 10.74 |
| LM2575HVT-ADJ/LF03 | NDH | TO-220 | 5 | 45 | 502 | 30 | 30048.2 | 10.74 |
| LM2575HVT-ADJ/NOPB | KC | TO-220 | 5 | 45 | 502 | 33 | 6985 | 4.06 |
| LM2575M-5.0 | DW | SOIC | 24 | 30 | 495 | 15 | 5842 | 7.87 |
| LM2575M-5.0 | DW | SOIC | 24 | 30 | 495 | 15 | 5842 | 7.87 |
| LM2575M-5.0/NOPB | DW | SOIC | 24 | 30 | 495 | 15 | 5842 | 7.87 |
| LM2575M-ADJ/NOPB | DW | SOIC | 24 | 30 | 495 | 15 | 5842 | 7.87 |
| LM2575S-12/NOPB | KTT | TO-263 | 5 | 45 | 502 | 25 | 8204.2 | 9.19 |
| LM2575S-15/NOPB | KTT | TO-263 | 5 | 45 | 502 | 25 | 8204.2 | 9.19 |
| LM2575S-3.3 | KTT | TO-263 | 5 | 45 | 502 | 25 | 8204.2 | 9.19 |
| LM2575S-3.3 | KTT | TO-263 | 5 | 45 | 502 | 25 | 8204.2 | 9.19 |
| LM2575S-3.3/NOPB | KTT | TO-263 | 5 | 45 | 502 | 25 | 8204.2 | 9.19 |
| LM2575S-5.0 | KTT | TO-263 | 5 | 45 | 502 | 25 | 8204.2 | 9.19 |
| LM2575S-5.0 | KTT | TO-263 | 5 | 45 | 502 | 25 | 8204.2 | 9.19 |
| LM2575S-5.0/NOPB | KTT | TO-263 | 5 | 45 | 502 | 25 | 8204.2 | 9.19 |
| LM2575S-ADJ | KTT | TO-263 | 5 | 45 | 502 | 25 | 8204.2 | 9.19 |
| LM2575S-ADJ | KTT | TO-263 | 5 | 45 | 502 | 25 | 8204.2 | 9.19 |
| LM2575S-ADJ/NOPB | KTT | TO-263 | 5 | 45 | 502 | 25 | 8204.2 | 9.19 |
| LM2575T-12 | KC | TO-220 | 5 | 45 | 502 | 33 | 6985 | 4.06 |
| LM2575T-12 | KC | TO-220 | 5 | 45 | 502 | 33 | 6985 | 4.06 |
| LM2575T-12/LF03 | NDH | TO-220 | 5 | 45 | 502 | 30 | 30048.2 | 10.74 |
| LM2575T-12/NOPB | KC | TO-220 | 5 | 45 | 502 | 33 | 6985 | 4.06 |
| LM2575T-15 | KC | TO-220 | 5 | 45 | 502 | 33 | 6985 | 4.06 |
| LM2575T-15 | KC | TO-220 | 5 | 45 | 502 | 33 | 6985 | 4.06 |
| LM2575T-15/LF03 | NDH | TO-220 | 5 | 45 | 502 | 30 | 30048.2 | 10.74 |
| LM2575T-15/NOPB | KC | TO-220 | 5 | 45 | 502 | 33 | 6985 | 4.06 |
| LM2575T-3.3/LF03 | NDH | TO-220 | 5 | 45 | 502 | 30 | 30048.2 | 10.74 |
| LM2575T-3.3/NOPB | KC | TO-220 | 5 | 45 | 502 | 33 | 6985 | 4.06 |
| LM2575T-5.0 | KC | TO-220 | 5 | 45 | 502 | 33 | 6985 | 4.06 |
| LM2575T-5.0 | KC | TO-220 | 5 | 45 | 502 | 33 | 6985 | 4.06 |
| LM2575T-5.0/LB03 | NDH | TO-220 | 5 | 45 | 502 | 30 | 30048.2 | 10.74 |
| LM2575T-5.0/LB03 | NDH | TO-220 | 5 | 45 | 502 | 30 | 30048.2 | 10.74 |
| LM2575T-5.0/LF03 | NDH | TO-220 | 5 | 45 | 502 | 30 | 30048.2 | 10.74 |
| LM2575T-5.0/NOPB | KC | TO-220 | 5 | 45 | 502 | 33 | 6985 | 4.06 |
| LM2575T-ADJ | KC | TO-220 | 5 | 45 | 502 | 33 | 6985 | 4.06 |
| LM2575T-ADJ | KC | TO-220 | 5 | 45 | 502 | 33 | 6985 | 4.06 |

| Device | Package Name | Package Type | Pins | SPQ | L (mm) | W (mm) | T (µm) | B (mm) |
|---|---|---|---|---|---|---|---|---|
| LM2575T-ADJ/LB03 | NDH | TO-220 | 5 | 45 | 502 | 30 | 30048.2 | 10.74 |
| LM2575T-ADJ/LB03 | NDH | TO-220 | 5 | 45 | 502 | 30 | 30048.2 | 10.74 |
| LM2575T-ADJ/LF02 | NEB | TO-220 | 5 | 45 | 502 | 30 | 30048.2 | 10.74 |
| LM2575T-ADJ/LF03 | NDH | TO-220 | 5 | 45 | 502 | 30 | 30048.2 | 10.74 |
| LM2575T-ADJ/NOPB | KC | TO-220 | 5 | 45 | 502 | 33 | 6985 | 4.06 |

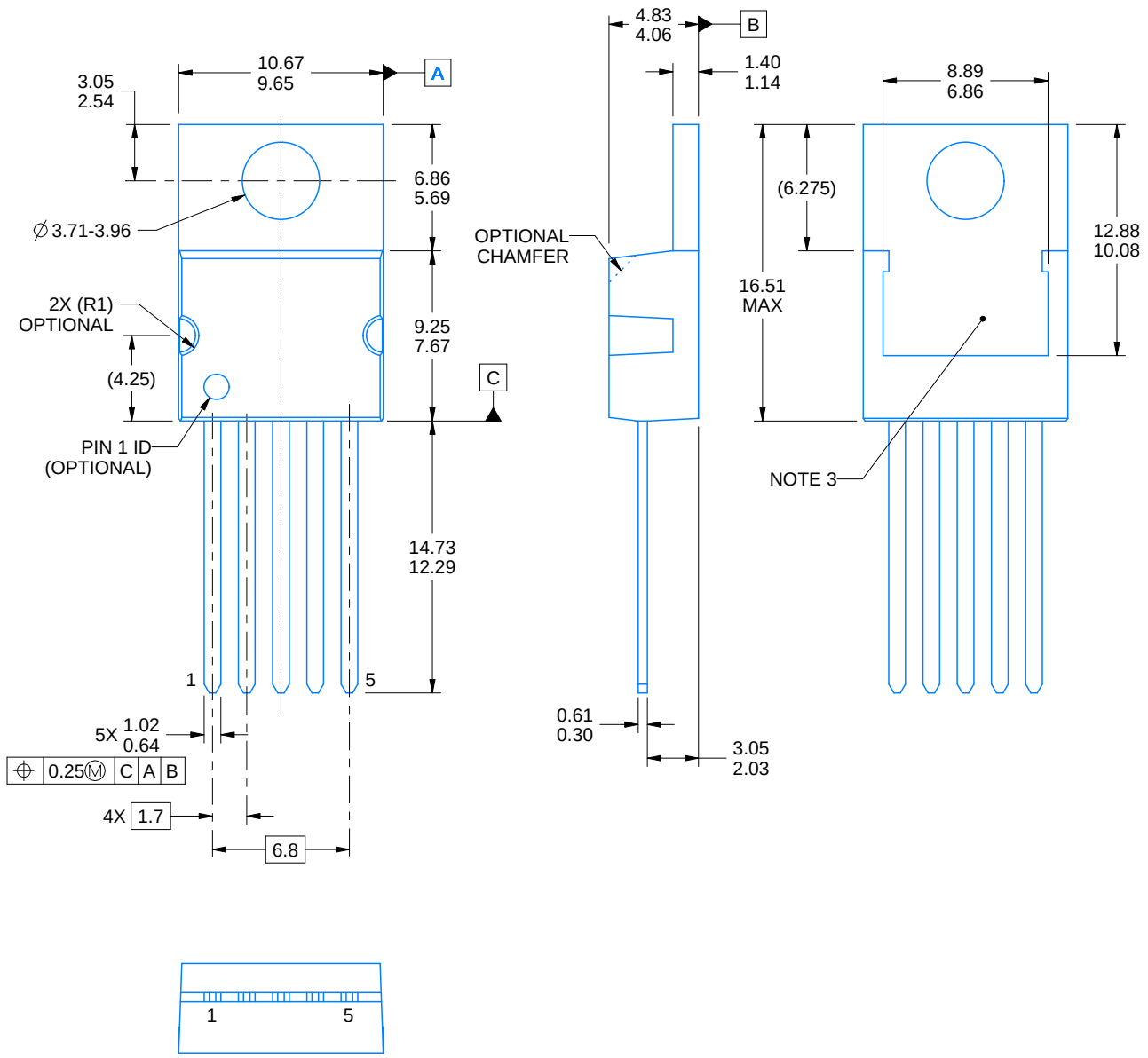


4215009/A 01/2017

NOTES:

1. All controlling linear dimensions are in inches. Dimensions in brackets are in millimeters. Any dimension in brackets or parenthesis are for reference only. Dimensioning and tolerancing per ASME Y14.5M.
2. This drawing is subject to change without notice.
3. Shape may vary per different assembly sites.

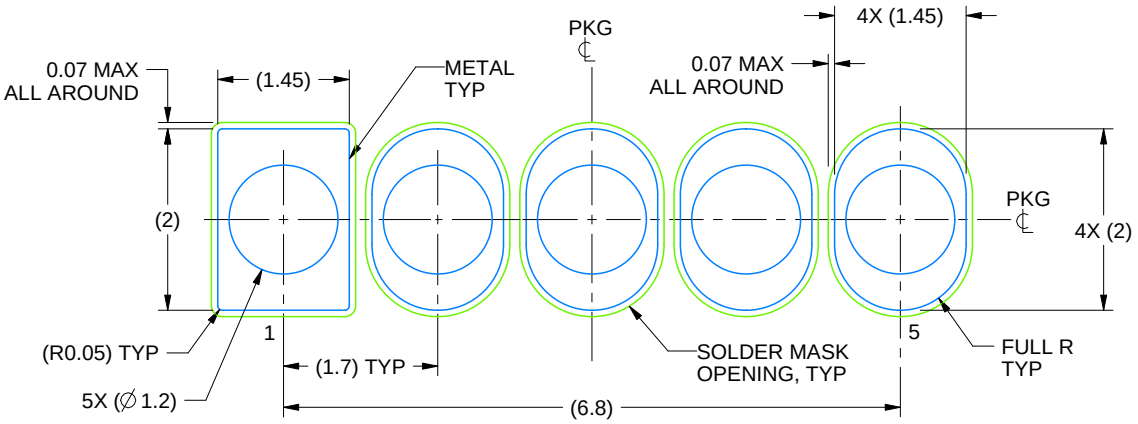


LAND PATTERN
NON-SOLDER MASK DEFINED
SCALE:12X

4215009/A 01/2017

NDH0005D

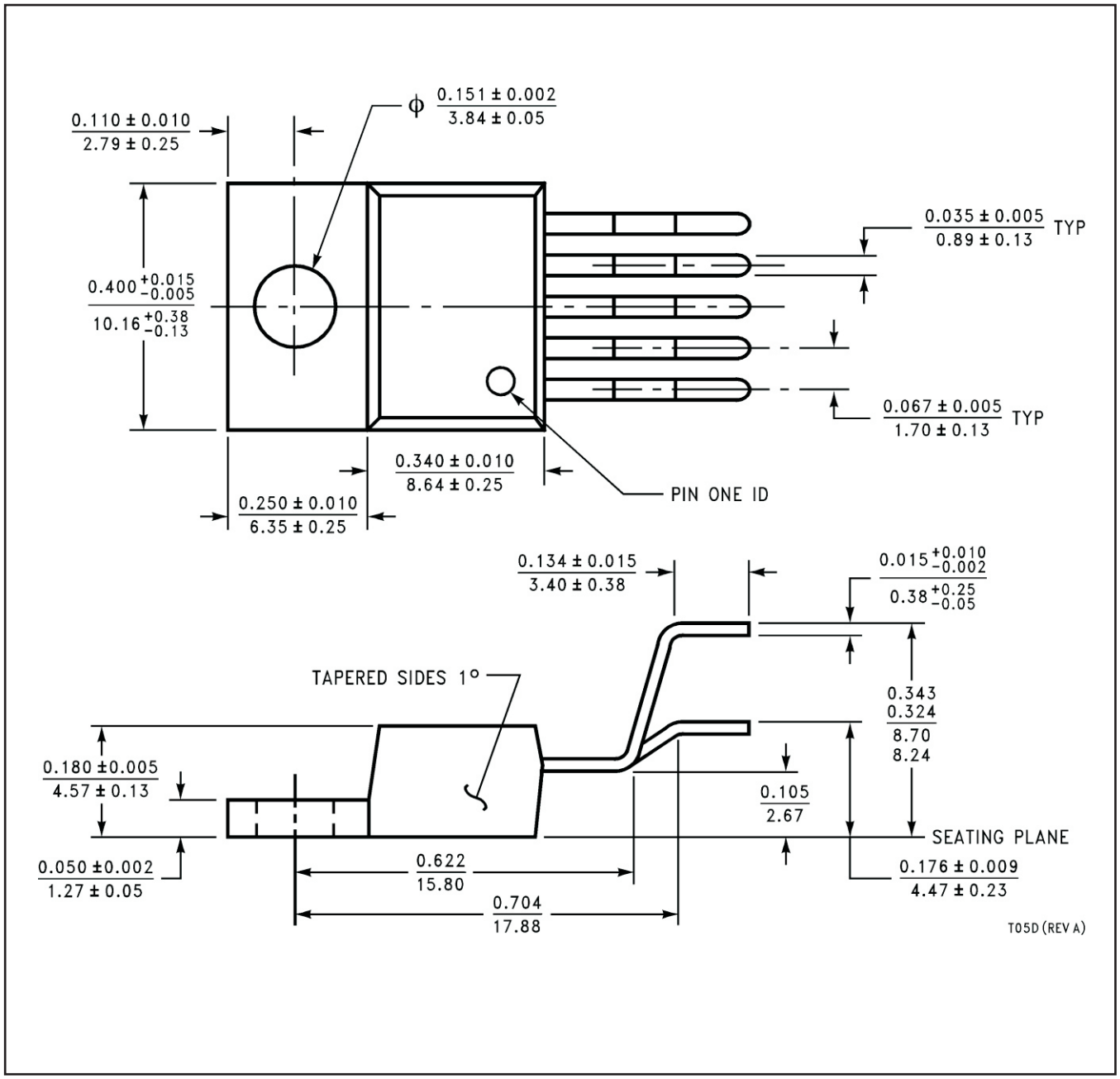
0.110 ± 0.010
2.79 ± 0.25
ϕ 0.151 ± 0.002
3.84 ± 0.05
0.035 ± 0.005
0.89 ± 0.13
TYP
0.400 +0.015 −0.005
10.16 +0.38 −0.13
0.067 ± 0.005
1.70 ± 0.13
TYP
0.340 ± 0.010
8.64 ± 0.25
PIN ONE ID
0.250 ± 0.010
6.35 ± 0.25
0.134 ± 0.015
3.40 ± 0.38
0.015 +0.010 −0.002
0.38 +0.25 −0.05
TAPERED SIDES 1°
0.343
0.324
8.70
8.24
0.180 ±0.005
4.57 ± 0.13
0.105
2.67
SEATING PLANE
0.050 ±0.002
1.27 ± 0.05
0.622
15.80
0.176 ± 0.009
4.47 ± 0.23
0.704
17.88
T05D (REV A)

# KTT0005B

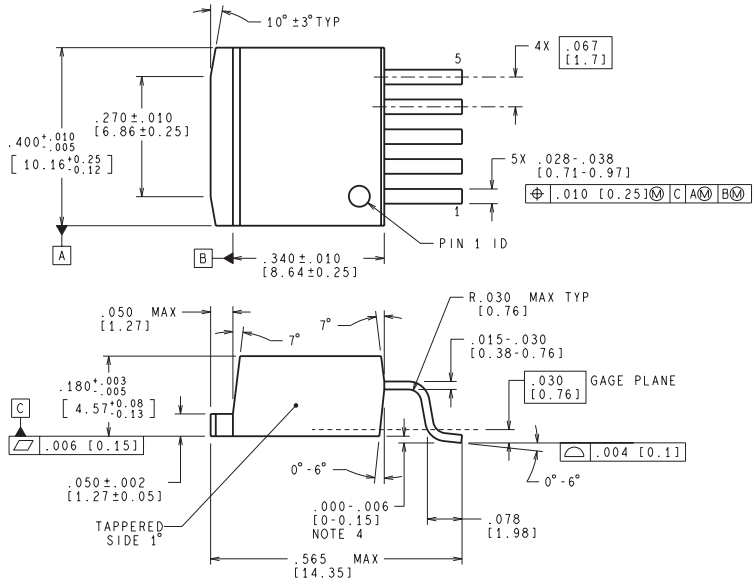


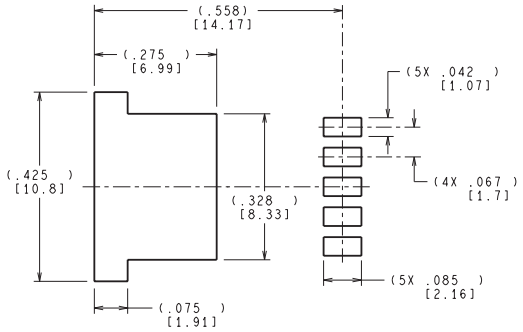


LAND PATTERN RECOMMENDATION

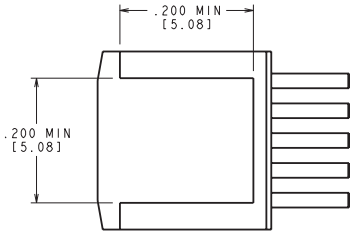


BOTTOM SIDE OF PACKAGE

CONTROLLING DIMENSION IS INCH
VALUES IN [ ] ARE MILLIMETERS
DIMENSIONS IN ( ) FOR REFERENCE ONLY

TS5B (Rev D)

NEB0005F

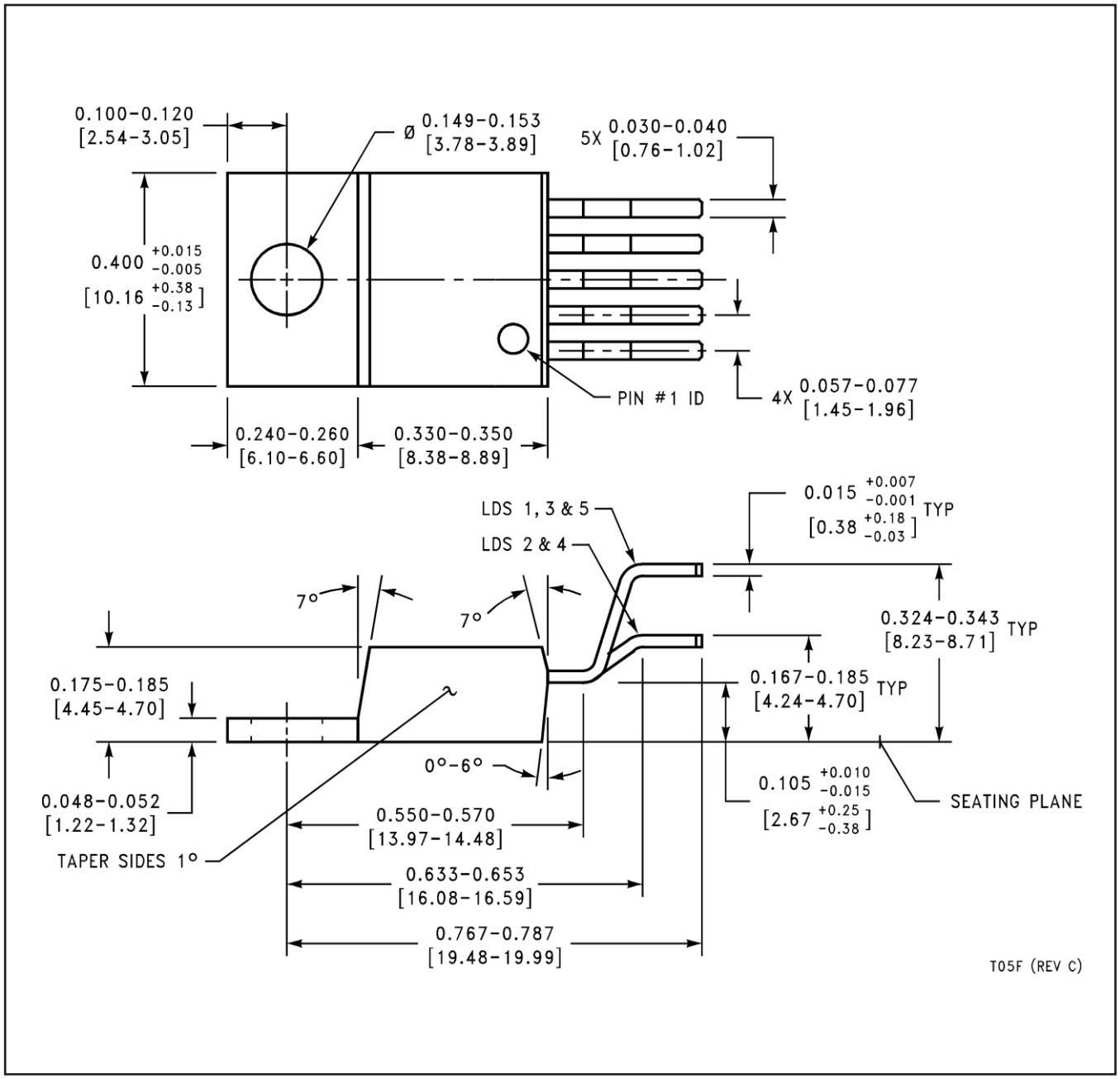
0.100-0.120
[2.54-3.05]
Ø 0.149-0.153
[3.78-3.89]
5X 0.030-0.040
[0.76-1.02]
0.400 +0.015 -0.005
[10.16 +0.38 -0.13]
PIN #1 ID
4X 0.057-0.077
[1.45-1.96]
0.240-0.260
[6.10-6.60]
0.330-0.350
[8.38-8.89]
LDS 1, 3 & 5
LDS 2 & 4
0.015 +0.007 -0.001 TYP
[0.38 +0.18 -0.03]
7°
7°
0.324-0.343 TYP
[8.23-8.71]
0.175-0.185
[4.45-4.70]
0.167-0.185 TYP
[4.24-4.70]
0°-6°
0.105 +0.010 -0.015
[2.67 +0.25 -0.38]
SEATING PLANE
0.048-0.052
[1.22-1.32]
0.550-0.570
[13.97-14.48]
TAPER SIDES 1°
0.633-0.653
[16.08-16.59]
0.767-0.787
[19.48-19.99]
T05F (REV C)

NEB0005B

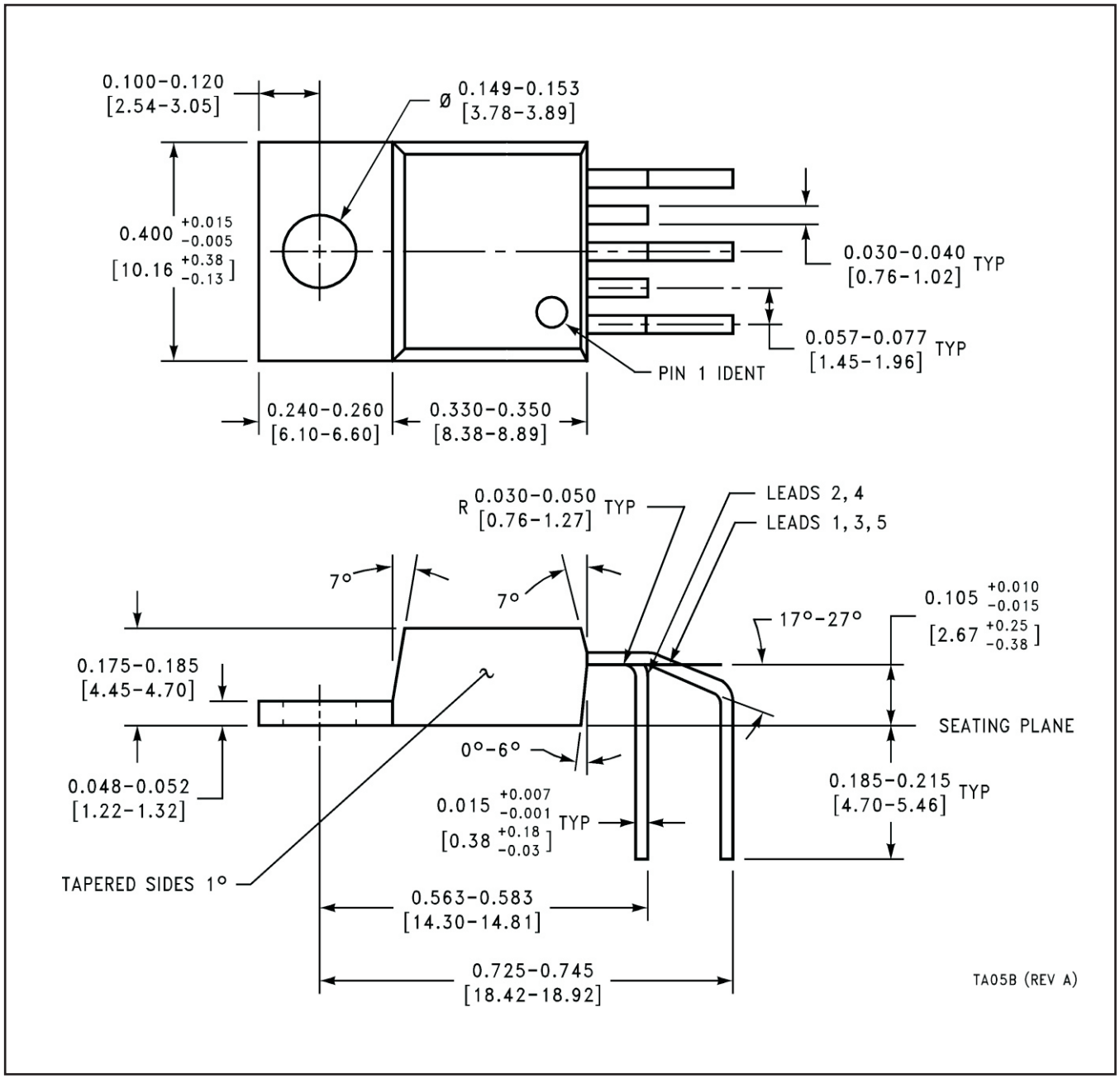
0.100-0.120
[2.54-3.05]
Ø 0.149-0.153
[3.78-3.89]
0.400 +0.015 -0.005
[10.16 +0.38 -0.13]
0.030-0.040 TYP
[0.76-1.02]
0.057-0.077 TYP
[1.45-1.96]
PIN 1 IDENT
0.240-0.260
[6.10-6.60]
0.330-0.350
[8.38-8.89]
R 0.030-0.050 TYP
[0.76-1.27]
LEADS 2, 4
LEADS 1, 3, 5
7°
7°
17°-27°
0.105 +0.010 -0.015
[2.67 +0.25 -0.38]
0.175-0.185
[4.45-4.70]
SEATING PLANE
0°-6°
0.048-0.052
[1.22-1.32]
0.185-0.215 TYP
[4.70-5.46]
0.015 +0.007 -0.001 TYP
[0.38 +0.18 -0.03]
TAPERED SIDES 1°
0.563-0.583
[14.30-14.81]
0.725-0.745
[18.42-18.92]
TA05B (REV A)

DW (R–PDSO–G24) PLASTIC SMALL OUTLINE

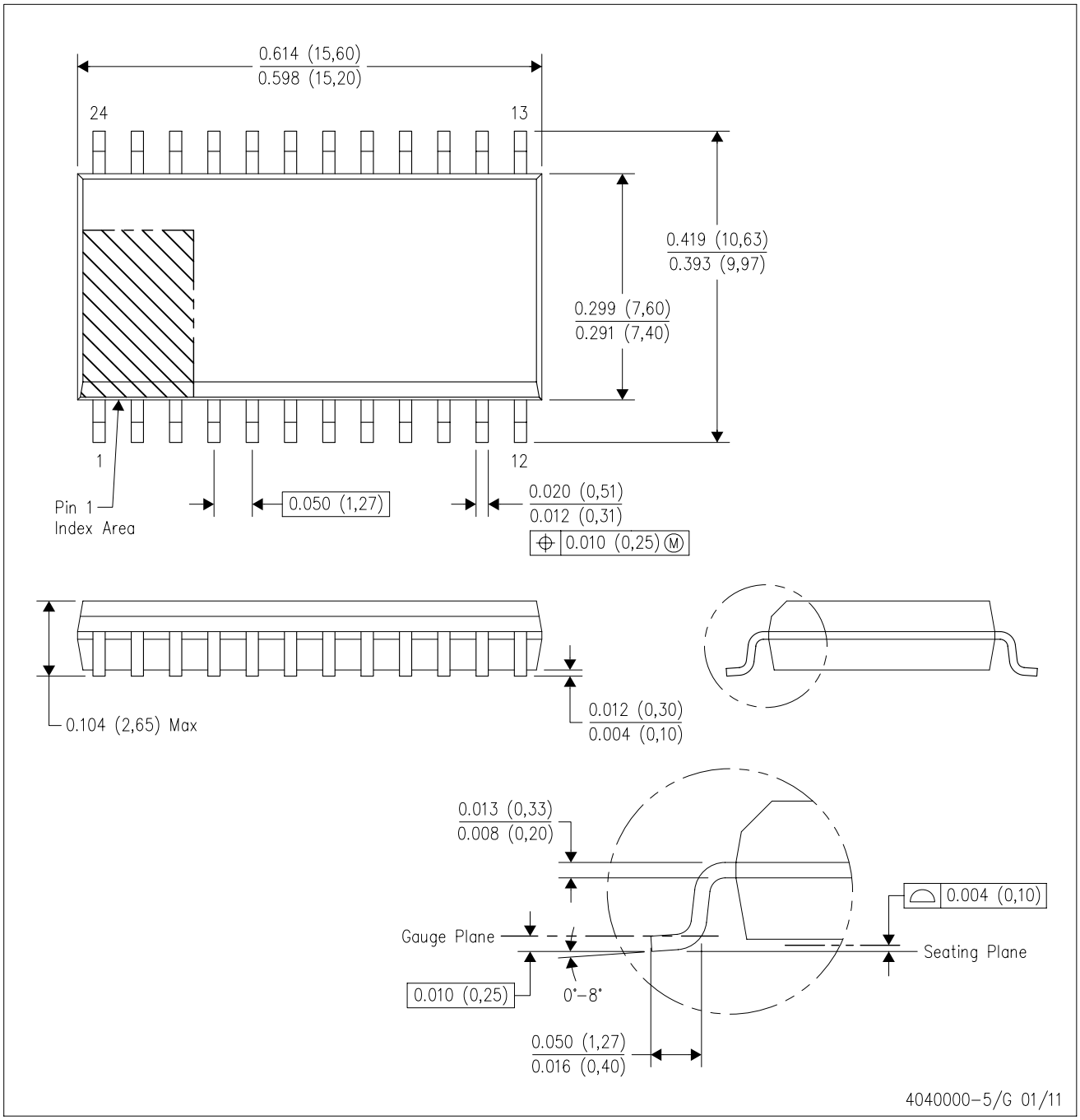


NOTES:
A. All linear dimensions are in inches (millimeters). Dimensioning and tolerancing per ASME Y14.5M–1994.
B. This drawing is subject to change without notice.
C. Body dimensions do not include mold flash or protrusion not to exceed 0.006 (0,15).
D. Falls within JEDEC MS–013 variation AD.

# IMPORTANT NOTICE AND DISCLAIMER

TI PROVIDES TECHNICAL AND RELIABILITY DATA (INCLUDING DATA SHEETS), DESIGN RESOURCES (INCLUDING REFERENCE DESIGNS), APPLICATION OR OTHER DESIGN ADVICE, WEB TOOLS, SAFETY INFORMATION, AND OTHER RESOURCES “AS IS” AND WITH ALL FAULTS, AND DISCLAIMS ALL WARRANTIES, EXPRESS AND IMPLIED, INCLUDING WITHOUT LIMITATION ANY IMPLIED WARRANTIES OF MERCHANTABILITY, FITNESS FOR A PARTICULAR PURPOSE OR NON-INFRINGEMENT OF THIRD PARTY INTELLECTUAL PROPERTY RIGHTS.

These resources are intended for skilled developers designing with TI products. You are solely responsible for (1) selecting the appropriate TI products for your application, (2) designing, validating and testing your application, and (3) ensuring your application meets applicable standards, and any other safety, security, regulatory or other requirements.

These resources are subject to change without notice. TI grants you permission to use these resources only for development of an application that uses the TI products described in the resource. Other reproduction and display of these resources is prohibited. No license is granted to any other TI intellectual property right or to any third party intellectual property right. TI disclaims responsibility for, and you will fully indemnify TI and its representatives against, any claims, damages, costs, losses, and liabilities arising out of your use of these resources.

TI’s products are provided subject to TI’s Terms of Sale or other applicable terms available either on ti.com or provided in conjunction with such TI products. TI’s provision of these resources does not expand or otherwise alter TI’s applicable warranties or warranty disclaimers for TI products.

TI objects to and rejects any additional or different terms you may have proposed.

Mailing Address: Texas Instruments, Post Office Box 655303, Dallas, Texas 75265
Copyright © 2022, Texas Instruments Incorporated