SDLS058

SN54157, SN54LS157, SN54LS158, SN54S157, SN54S158, SN74157, SN74LS157, SN74LS158, SN74S157, SN74S158
QUADRUPLE 2-LINE TO 1-LINE DATA SELECTORS/MULTIPLEXERS

MARCH 1974 – REVISED MARCH 1988

- Buffered Inputs and Outputs
- Three Speed/Power Ranges Available

TYPES	TYPICAL AVERAGE PROPAGATION TIME	TYPICAL POWER DISSIPATION
'157	9 ns	150 mW
'LS157	9 ns	49 mW
'S157	5 ns	250 mW
'LS158	7 ns	24 mW
'S158	4 ns	195 mW

SN54157, SN54LS157, SN54S157, SN54LS158, SN54S158 . . . J OR W PACKAGE
SN74157 . . . N PACKAGE
SN74LS157, SN74S157, SN74LS158, SN74S158 . . . D OR N PACKAGE
(TOP VIEW)

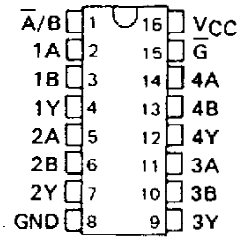

SN54LS157, SN54S157, SN54LS158, SN54S158 . . . FK PACKAGE
(TOP VIEW)

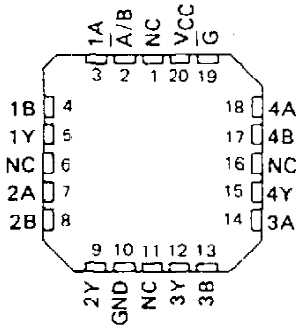

NC – No internal connection

applications

- Expand Any Data Input Point
- Multiplex Dual Data Buses
- Generate Four Functions of Two Variables (One Variable Is Common)
- Source Programmable Counters

description

These monolithic data selectors/multiplexers contain inverters and drivers to supply full on-chip data selection to the four output gates. A separate strobe input is provided. A 4-bit word is selected from one of two sources and is routed to the four outputs. The '157, 'LS157, and 'S157 present true data whereas the 'LS158 and 'S158 present inverted data to minimize propagation delay time.

FUNCTION TABLE

INPUTS				OUTPUT Y	
STROBE $\overline{G}$	SELECT $\overline{A}$/B	A	B	'157, 'LS157, 'S157	'LS158 'S158
H	X	X	X	L	H
L	L	L	X	L	H
L	L	H	X	H	L
L	H	X	L	L	H
L	H	X	H	H	L

H = high level, L = low level, X = irrelevant

absolute maximum ratings over operating free-air temperature range (unless otherwise noted)

Supply voltage, V_{CC} (See Note 1) . . . . . 7 V
Input voltage: '157, 'S158 . . . . . 5.5 V
'LS157, 'LS158 . . . . . 7 V
Operating free-air temperature range: SN54' . . . . . −55°C to 125°C
SN74' . . . . . 0°C to 70°C
Storage temperature range . . . . . −65°C to 150°C

NOTE 1: Voltage values are with respect to network ground terminal.

PRODUCTION DATA documents contain information current as of publication date. Products conform to specifications per the terms of Texas Instruments standard warranty. Production processing does not necessarily include testing of all parameters.

TEXAS INSTRUMENTS
POST OFFICE BOX 655012 • DALLAS, TEXAS 75265

logic symbols†

'157, 'LS157, 'S157

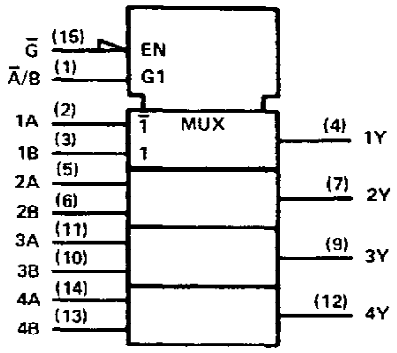

'158, 'LS158, 'S158

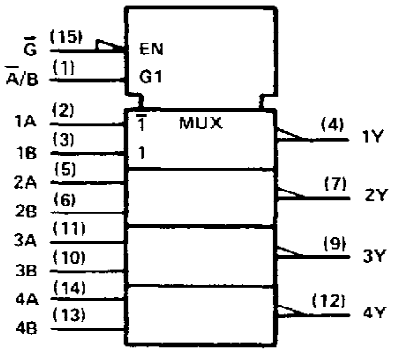

† These symbols are in accordance with ANSI/IEEE Std. 91-1984 and IEC Publication 617-12.
Pin numbers shown are for D, J, N, and W packages.

logic diagram (positive logic)

'157

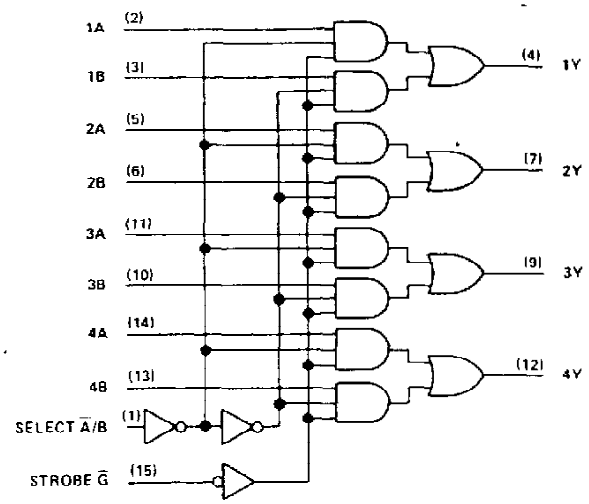

schematics of inputs and outputs

'157

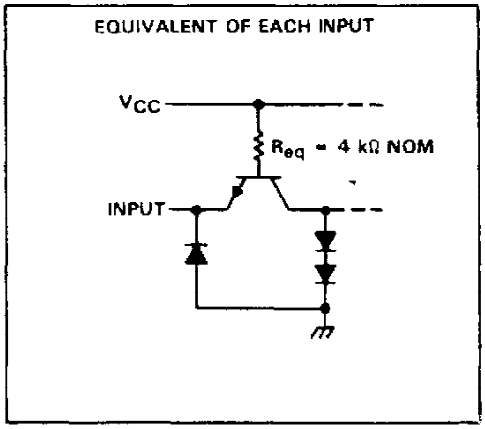

'157

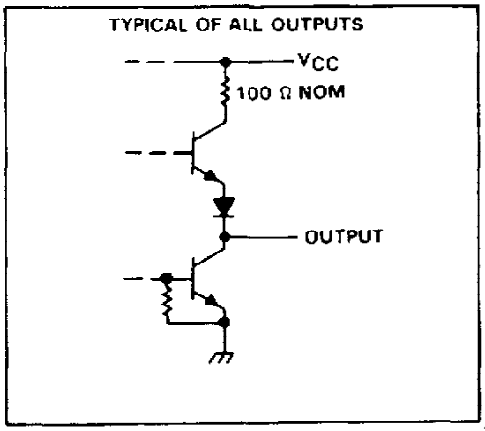

logic diagrams (positive logic)

'LS157, 'S157

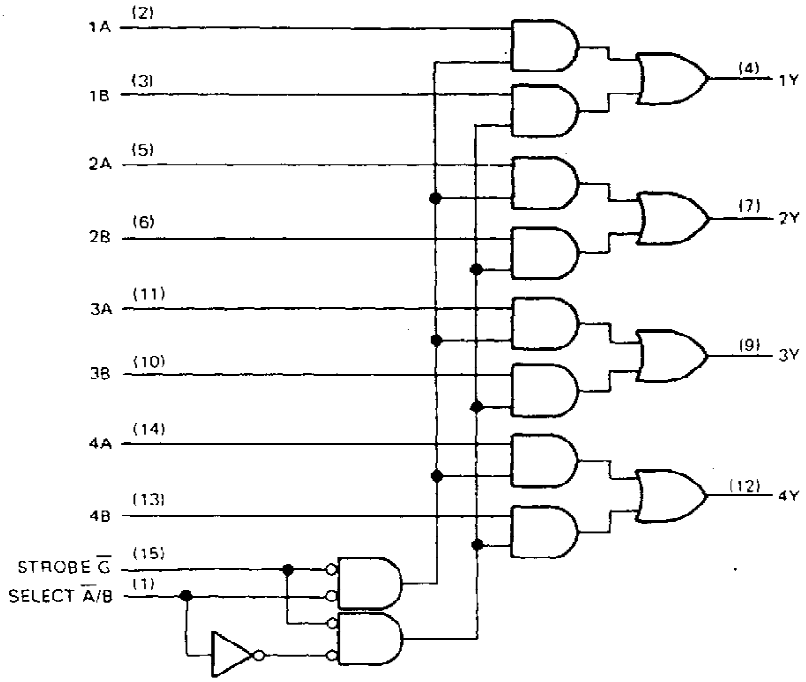

'LS158, 'S158

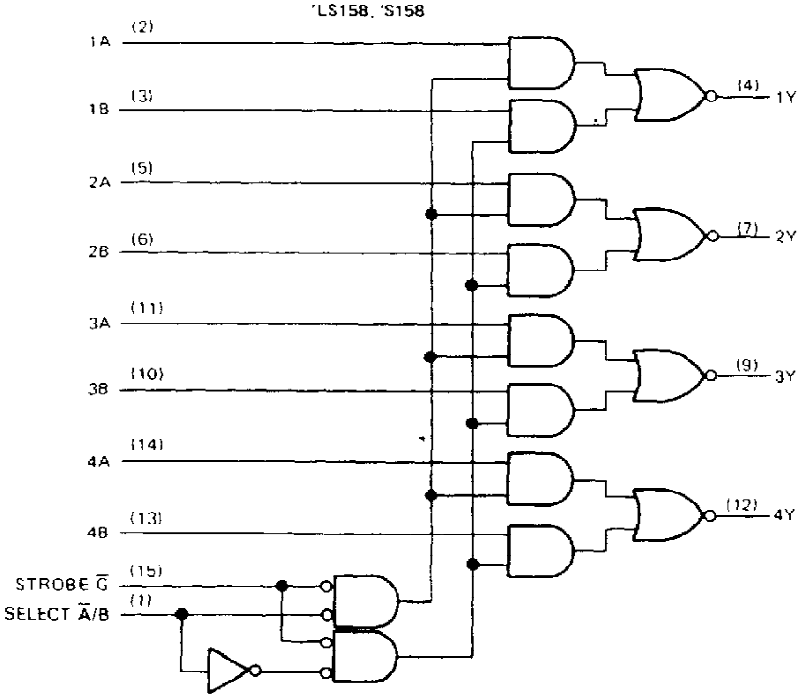

Pin numbers shown are for D, J, N, and W packages.

schematics of inputs and outputs

'LS157, 'LS158

EQUIVALENT OF EACH INPUT

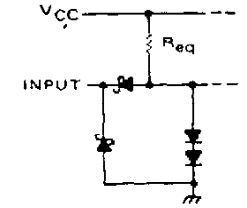

S or G inputs: R_{eq} = 8.5 kΩ NOM
A or B inputs: R_{eq} = 17 kΩ NOM

TYPICAL OF ALL OUTPUTS

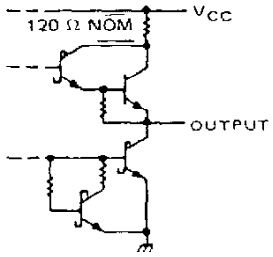

'S157, 'S158

EQUIVALENT OF EACH INPUT

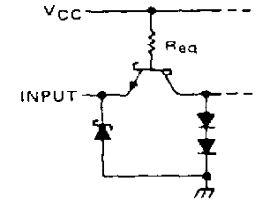

S or G inputs: R_{eq} = 1.4 kΩ NOM
A or B inputs: R_{eq} = 2.8 kΩ NOM

TYPICAL OF ALL OUTPUTS

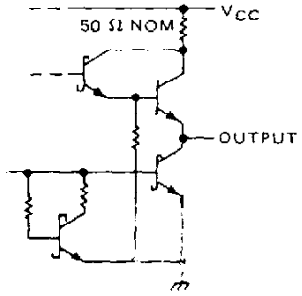

recommended operating conditions

	SN54157			SN74157			UNIT
	MIN	NOM	MAX	MIN	NOM	MAX	
Supply voltage, V_{CC}	4.5	5	5.5	4.75	5	5.25	V
High-level output current, I_{OH}			−800			−800	μA
Low-level output current, I_{OL}			16			16	mA
Operating free-air temperature, T_A	−55		125	0		70	°C

electrical characteristics over recommended operating free-air temperature range (unless otherwise noted)

PARAMETER		TEST CONDITIONS†		SN54157			SN74157			UNIT
				MIN	TYP‡	MAX	MIN	TYP‡	MAX	
V_{IH}	High-level input voltage			2			2			V
V_{IL}	Low-level input voltage					0.8			0.8	V
V_{IK}	Input clamp voltage	V_{CC} = MIN,	I_I = −12 mA			−1.5			−1.5	V
V_{OH}	High-level output voltage	V_{CC} = MIN, V_{IL} = 0.8 V,	V_{IH} = 2 V, I_{OH} = −800 μA	2.4	3.4		2.4	3.4		V
V_{OL}	Low-level output voltage	V_{CC} = MIN, V_{IL} = 0.8 V,	V_{IH} = 2 V, I_{OL} = 16 mA		0.2	0.4		0.2	0.4	V
I_I	Input current at maximum input voltage	V_{CC} = MAX,	V_I = 5.5 V			1			1	mA
I_{IH}	High-level input current	V_{CC} = MAX,	V_I = 2.4 V			40			40	μA
I_{IL}	Low-level input current	V_{CC} = MAX,	V_I = 0.4 V			−1.6			−1.6	mA
I_{OS}	Short-circuit output current§	V_{CC} = MAX		−20		−55	−18		−55	mA
I_{CC}	Supply current	V_{CC} = MAX,	See Note 2		30	48		30	48	mA

†For conditions shown as MIN or MAX, use the appropriate value specified under recommended operating conditions.
‡All typical values are at V_{CC} = 5 V, T_A = 25°C.
§Not more than one output should be shorted at a time and duration of short-circuit should not exceed one second.
NOTE 2: I_{CC} is measured with 4.5 V applied to all inputs and all outputs open.

switching characteristics, V_{CC} = 5 V, T_A = 25°C

PARAMETER¶	FROM (INPUT)	TEST CONDITIONS	MIN	TYP	MAX	UNIT
t_{PLH}	Data	C_L = 15 pF, R_L = 400 Ω, See Note 3		9	14	ns
t_{PHL}				9	14	
t_{PLH}	Strobe $\overline{G}$			13	20	ns
t_{PHL}				14	21	
t_{PLH}	Select $\overline{A}$/B			15	23	ns
t_{PHL}				18	27	

¶t_{PLH} = propagation delay time, low-to-high-level output
t_{PHL} = propagation delay time, high-to-low-level output
NOTE 3: Load circuits and voltage waveforms are shown in Section 1.

recommended operating conditions

		SN54LS'			SN74LS'			UNIT
		MIN	NOM	MAX	MIN	NOM	MAX	
V_{CC}	Supply voltage	4.5	5	5.5	4.75	5	5.25	V
I_{OH}	High-level output current			−400			−400	μA
I_{OL}	Low-level output current			4			8	mA
T_A	Operating free-air temperature	−55		125	0		70	°C

electrical characteristics over recommended operating free-air temperature range (unless otherwise noted)

PARAMETER			TEST CONDITIONS†			SN54LS'			SN74LS'			UNIT
						MIN	TYP‡	MAX	MIN	TYP‡	MAX	
V_{IH}	High-level input voltage					2			2			V
V_{IL}	Low-level input voltage							0.7			0.8	V
V_{IK}	Input clamp voltage		V_{CC} = MIN,	I_I = −18 mA				−1.5			−1.5	V
V_{OH}	High-level output voltage		V_{CC} = MIN, V_{IL} = MAX,	V_{IH} = 2 V, I_{OH} = −400 μA		2.5	3.4		2.7	3.4		V
V_{OL}	Low-level output voltage		V_{CC} = MIN, V_{IL} = MAX	V_{IH} = 2 V,	I_{OL} = 4 mA		0.25	0.4		0.25	0.4	V
					I_{OL} = 8 mA					0.35	0.5	
I_I	Input current at maximum input voltage	$\overline{A}/B$ or $\overline{G}$	V_{CC} = MAX,	V_I = 7 V				0.2			0.2	mA
		A or B						0.1			0.1	
I_{IH}	High-level input current	$\overline{A}/B$ or $\overline{G}$	V_{CC} = MAX,	V_I = 2.7 V				40			40	μA
		A or B						20			20	
I_{IL}	Low-level input current	$\overline{A}/B$ or $\overline{G}$	V_{CC} = MAX,	V_I = 0.4 V				−0.8			−0.8	mA
		A or B						−0.4			−0.4	
I_{OS}	Short-circuit output current§		V_{CC} = MAX			−20		−100	−20		−100	mA
I_{CC}	Supply current		V_{CC} = MAX,	See Note 2	'LS157		9.7	16		9.7	16	mA
					'LS158		4.8	8		4.8	8	
			V_{CC} = MAX, All A inputs at 4.5 V, All other inputs at 0 V		'LS158		6.5	11		6.5	11	

† For conditions shown as MIN or MAX, use the appropriate value specified under recommended operating conditions.
‡ All typical values are at V_{CC} = 5 V, T_A = 25°C.
§ Not more than one output should be shorted at a time and duration of short-circuit should not exceed one second.
NOTE 2: I_{CC} is measured with 4.5 V applied to all inputs and all outputs open.

switching characteristics, V_{CC} = 5 V, T_A = 25°C

PARAMETER¶	FROM (INPUT)	TEST CONDITIONS	'LS157			'LS158			UNIT
			MIN	TYP	MAX	MIN	TYP	MAX	
t_{PLH}	Data	C_L = 15 pF, R_L = 2 kΩ, See Note 3		9	14		7	12	ns
t_{PHL}				9	14		10	15	
t_{PLH}	Strobe $\overline{G}$			13	20		11	17	ns
t_{PHL}				14	21		18	24	
t_{PLH}	Select $\overline{A}/B$			15	23		13	20	ns
t_{PHL}				18	27		16	24	

¶ t_{PLH} = propagation delay time, low-to-high-level output
t_{PHL} = propagation delay time, high-to-low-level output
NOTE 3: Load circuits and voltage diagrams are shown in Section 1.

recommended operating conditions

	SN54S157 SN54S158			SN74S157 SN74S158			UNIT
	MIN	NOM	MAX	MIN	NOM	MAX	
Supply voltage, V_{CC}	4.5	5	5.5	4.75	5	5.25	V
High-level output current, I_{OH}			−1			−1	mA
Low-level output current, I_{OL}			20			20	mA
Operating free-air temperature, T_A	−55		125	0		70	°C

electrical characteristics over recommended operating free-air temperature range (unless otherwise noted)

PARAMETER			TEST CONDITIONS†		SN54S157 SN74S157			SN54S158 SN74S158			UNIT
					MIN	TYP‡	MAX	MIN	TYP‡	MAX	
V_{IH}	High-level input voltage				2			2			V
V_{IL}	Low-level input voltage						0.8			0.8	V
V_{IK}	Input clamp voltage		V_{CC} = MIN, I_I = −18 mA				−1.2			−1.2	V
V_{OH}	High-level output voltage		V_{CC} = MIN, V_{IH} = 2 V, V_{IL} = 0.8 V, I_{OH} = −1 mA	Series 54S	2.5	3.4		2.5	3.4		V
				Series 74S	2.7	3.4		2.7	3.4		
V_{OL}	Low-level output voltage		V_{CC} = MIN, V_{IH} = 2 V, V_{IL} = 0.8 V, I_{OL} = 20 mA				0.5			0.5	V
I_I	Input current at maximum input voltage		V_{CC} = MAX, V_I = 5.5 V				1			1	mA
I_{IH}	High-level input current	$\overline{A}/B$ or $\overline{G}$	V_{CC} = MAX, V_I = 2.7 V				100			100	µA
		A or B					50			50	
I_{IL}	Low-level input current	$\overline{A}/B$ or $\overline{G}$	V_{CC} = MAX, V_I = 0.5 V				−4			−4	mA
		A or B					−2			−2	
I_{OS}	Short-circuit ouput current§		V_{CC} = MAX		−40		−100	−40		−100	mA
I_{CC}	Supply current		V_{CC} = MAX, All inputs at 4.5 V, See Note 2			50	78		39	61	mA
			V_{CC} = MAX, A inputs at 4.5 V, B,G,S, inputs at 0 V, See Note 2							81	

† For conditions shown as MIN or MAX, use the appropriate value specified under recommended operating conditions.
‡ All typical values are at V_{CC} = 5 V, T_A = 25°C.
§ Not more than one output should be shorted at a time, and duration of the short-circuit should not exceed one second.
Note 2: I_{CC} is measured with all outputs open.

switching characteristics, V_{CC} = 5 V, T_A = 25°C

PARAMETER¶	FROM (INPUT)	TEST CONDITIONS	SN54S157 SN74S157			SN54S158 SN74S158			UNIT
			MIN	TYP	MAX	MIN	TYP	MAX	
t_{PLH}	Data	C_L = 15 pF, R_L = 280 Ω, See Note 3		5	7.5		4	6	ns
t_{PHL}				4.5	6.5		4	6	
t_{PLH}	Strobe $\overline{G}$			8.5	12.5		6.5	11.5	ns
t_{PHL}				7.5	12		7	12	
t_{PLH}	Select $\overline{A}/B$			9.5	15		8	12	ns
t_{PHL}				9.5	15		8	12	

¶ t_{PLH} = propagation delay time, low-to-high-level output
t_{PHL} = propagation delay time, high-to-low-level output
NOTE 3: Load circuits and voltage waveforms are shown in Section 1.

PACKAGING INFORMATION

Orderable Device	Status (1)	Package Type	Package Drawing	Pins	Package Qty	Eco Plan (2)	Lead finish/ Ball material (6)	MSL Peak Temp (3)	Op Temp (°C)	Device Marking (4/5)	Samples
76002012A	ACTIVE	LCCC	FK	20	1	Non-RoHS & Green	SNPB	N / A for Pkg Type	-55 to 125	76002012A SNJ54LS 157FK	Samples
7600201EA	ACTIVE	CDIP	J	16	1	Non-RoHS & Green	SNPB	N / A for Pkg Type	-55 to 125	7600201EA SNJ54LS157J	Samples
7600201FA	ACTIVE	CFP	W	16	1	Non-RoHS & Green	SNPB	N / A for Pkg Type	-55 to 125	7600201FA SNJ54LS157W	Samples
76033012A	ACTIVE	LCCC	FK	20	1	Non-RoHS & Green	SNPB	N / A for Pkg Type	-55 to 125	76033012A SNJ54LS 158FK	Samples
7603301EA	ACTIVE	CDIP	J	16	1	Non-RoHS & Green	SNPB	N / A for Pkg Type	-55 to 125	7603301EA SNJ54LS158J	Samples
JM38510/07903BEA	ACTIVE	CDIP	J	16	1	Non-RoHS & Green	SNPB	N / A for Pkg Type	-55 to 125	JM38510/ 07903BEA	Samples
JM38510/07903BFA	ACTIVE	CFP	W	16	1	Non-RoHS & Green	SNPB	N / A for Pkg Type	-55 to 125	JM38510/ 07903BFA	Samples
JM38510/30903B2A	ACTIVE	LCCC	FK	20	1	Non-RoHS & Green	SNPB	N / A for Pkg Type	-55 to 125	JM38510/ 30903B2A	Samples
JM38510/30903BEA	ACTIVE	CDIP	J	16	1	Non-RoHS & Green	SNPB	N / A for Pkg Type	-55 to 125	JM38510/ 30903BEA	Samples
JM38510/30903BFA	ACTIVE	CFP	W	16	1	Non-RoHS & Green	SNPB	N / A for Pkg Type	-55 to 125	JM38510/ 30903BFA	Samples
M38510/07903BEA	ACTIVE	CDIP	J	16	1	Non-RoHS & Green	SNPB	N / A for Pkg Type	-55 to 125	JM38510/ 07903BEA	Samples
M38510/07903BFA	ACTIVE	CFP	W	16	1	Non-RoHS & Green	SNPB	N / A for Pkg Type	-55 to 125	JM38510/ 07903BFA	Samples
M38510/30903B2A	ACTIVE	LCCC	FK	20	1	Non-RoHS & Green	SNPB	N / A for Pkg Type	-55 to 125	JM38510/ 30903B2A	Samples
M38510/30903BEA	ACTIVE	CDIP	J	16	1	Non-RoHS & Green	SNPB	N / A for Pkg Type	-55 to 125	JM38510/ 30903BEA	Samples
M38510/30903BFA	ACTIVE	CFP	W	16	1	Non-RoHS & Green	SNPB	N / A for Pkg Type	-55 to 125	JM38510/ 30903BFA	Samples
SN54157J	ACTIVE	CDIP	J	16	1	Non-RoHS & Green	SNPB	N / A for Pkg Type	-55 to 125	SN54157J	Samples

Orderable Device	Status (1)	Package Type	Package Drawing	Pins	Package Qty	Eco Plan (2)	Lead finish/ Ball material (6)	MSL Peak Temp (3)	Op Temp (°C)	Device Marking (4/5)	Samples
SN54LS157J	ACTIVE	CDIP	J	16	1	Non-RoHS & Green	SNPB	N / A for Pkg Type	-55 to 125	SN54LS157J	Samples
SN54LS158J	ACTIVE	CDIP	J	16	1	Non-RoHS & Green	SNPB	N / A for Pkg Type	-55 to 125	SN54LS158J	Samples
SN54S157J	ACTIVE	CDIP	J	16	1	Non-RoHS & Green	SNPB	N / A for Pkg Type	-55 to 125	SN54S157J	Samples
SN74LS157D	ACTIVE	SOIC	D	16	40	RoHS & Green	NIPDAU	Level-1-260C-UNLIM	0 to 70	LS157	Samples
SN74LS157DE4	ACTIVE	SOIC	D	16	40	RoHS & Green	NIPDAU	Level-1-260C-UNLIM	0 to 70	LS157	Samples
SN74LS157DR	ACTIVE	SOIC	D	16	2500	RoHS & Green	NIPDAU	Level-1-260C-UNLIM	0 to 70	LS157	Samples
SN74LS157DRE4	ACTIVE	SOIC	D	16	2500	RoHS & Green	NIPDAU	Level-1-260C-UNLIM	0 to 70	LS157	Samples
SN74LS157N	ACTIVE	PDIP	N	16	25	RoHS & Green	NIPDAU	N / A for Pkg Type	0 to 70	SN74LS157N	Samples
SN74LS157NE4	ACTIVE	PDIP	N	16	25	RoHS & Green	NIPDAU	N / A for Pkg Type	0 to 70	SN74LS157N	Samples
SN74LS157NSR	ACTIVE	SO	NS	16	2000	RoHS & Green	NIPDAU	Level-1-260C-UNLIM	0 to 70	74LS157	Samples
SN74LS158D	ACTIVE	SOIC	D	16	40	RoHS & Green	NIPDAU	Level-1-260C-UNLIM	0 to 70	LS158	Samples
SN74LS158DE4	ACTIVE	SOIC	D	16	40	RoHS & Green	NIPDAU	Level-1-260C-UNLIM	0 to 70	LS158	Samples
SN74LS158DR	ACTIVE	SOIC	D	16	2500	RoHS & Green	NIPDAU	Level-1-260C-UNLIM	0 to 70	LS158	Samples
SN74LS158N	ACTIVE	PDIP	N	16	25	RoHS & Green	NIPDAU	N / A for Pkg Type	0 to 70	SN74LS158N	Samples
SN74LS158NSR	ACTIVE	SO	NS	16	2000	RoHS & Green	NIPDAU	Level-1-260C-UNLIM	0 to 70	74LS158	Samples
SNJ54157J	ACTIVE	CDIP	J	16	1	Non-RoHS & Green	SNPB	N / A for Pkg Type	-55 to 125	SNJ54157J	Samples
SNJ54157W	ACTIVE	CFP	W	16	1	Non-RoHS & Green	SNPB	N / A for Pkg Type	-55 to 125	SNJ54157W	Samples
SNJ54LS157FK	ACTIVE	LCCC	FK	20	1	Non-RoHS & Green	SNPB	N / A for Pkg Type	-55 to 125	76002012A SNJ54LS 157FK	Samples
SNJ54LS157J	ACTIVE	CDIP	J	16	1	Non-RoHS & Green	SNPB	N / A for Pkg Type	-55 to 125	7600201EA SNJ54LS157J	Samples

Orderable Device	Status (1)	Package Type	Package Drawing	Pins	Package Qty	Eco Plan (2)	Lead finish/ Ball material (6)	MSL Peak Temp (3)	Op Temp (°C)	Device Marking (4/5)	Samples
SNJ54LS157W	ACTIVE	CFP	W	16	1	Non-RoHS & Green	SNPB	N / A for Pkg Type	-55 to 125	7600201FA SNJ54LS157W	Samples
SNJ54LS158FK	ACTIVE	LCCC	FK	20	1	Non-RoHS & Green	SNPB	N / A for Pkg Type	-55 to 125	76033012A SNJ54LS 158FK	Samples
SNJ54LS158J	ACTIVE	CDIP	J	16	1	Non-RoHS & Green	SNPB	N / A for Pkg Type	-55 to 125	7603301EA SNJ54LS158J	Samples
SNJ54S157FK	ACTIVE	LCCC	FK	20	1	Non-RoHS & Green	SNPB	N / A for Pkg Type	-55 to 125	SNJ54S 157FK	Samples
SNJ54S157J	ACTIVE	CDIP	J	16	1	Non-RoHS & Green	SNPB	N / A for Pkg Type	-55 to 125	SNJ54S157J	Samples
SNJ54S157W	ACTIVE	CFP	W	16	1	Non-RoHS & Green	SNPB	N / A for Pkg Type	-55 to 125	SNJ54S157W	Samples

(1) The marketing status values are defined as follows:
ACTIVE: Product device recommended for new designs.
LIFEBUY: TI has announced that the device will be discontinued, and a lifetime-buy period is in effect.
NRND: Not recommended for new designs. Device is in production to support existing customers, but TI does not recommend using this part in a new design.
PREVIEW: Device has been announced but is not in production. Samples may or may not be available.
OBSOLETE: TI has discontinued the production of the device.

(2) **RoHS:** TI defines "RoHS" to mean semiconductor products that are compliant with the current EU RoHS requirements for all 10 RoHS substances, including the requirement that RoHS substance do not exceed 0.1% by weight in homogeneous materials. Where designed to be soldered at high temperatures, "RoHS" products are suitable for use in specified lead-free processes. TI may reference these types of products as "Pb-Free".
RoHS Exempt: TI defines "RoHS Exempt" to mean products that contain lead but are compliant with EU RoHS pursuant to a specific EU RoHS exemption.
Green: TI defines "Green" to mean the content of Chlorine (Cl) and Bromine (Br) based flame retardants meet JS709B low halogen requirements of <=1000ppm threshold. Antimony trioxide based flame retardants must also meet the <=1000ppm threshold requirement.

(3) MSL, Peak Temp. - The Moisture Sensitivity Level rating according to the JEDEC industry standard classifications, and peak solder temperature.

(4) There may be additional marking, which relates to the logo, the lot trace code information, or the environmental category on the device.

(5) Multiple Device Markings will be inside parentheses. Only one Device Marking contained in parentheses and separated by a "~" will appear on a device. If a line is indented then it is a continuation of the previous line and the two combined represent the entire Device Marking for that device.

(6) Lead finish/Ball material - Orderable Devices may have multiple material finish options. Finish options are separated by a vertical ruled line. Lead finish/Ball material values may wrap to two lines if the finish value exceeds the maximum column width.

Important Information and Disclaimer: The information provided on this page represents TI's knowledge and belief as of the date that it is provided. TI bases its knowledge and belief on information provided by third parties, and makes no representation or warranty as to the accuracy of such information. Efforts are underway to better integrate information from third parties. TI has taken and continues to take reasonable steps to provide representative and accurate information but may not have conducted destructive testing or chemical analysis on incoming materials and chemicals. TI and TI suppliers consider certain information to be proprietary, and thus CAS numbers and other limited information may not be available for release.

In no event shall TI's liability arising out of such information exceed the total purchase price of the TI part(s) at issue in this document sold by TI to Customer on an annual basis.

OTHER QUALIFIED VERSIONS OF SN54LS157, SN54LS158, SN74LS157, SN74LS158 :

- Catalog : SN74LS157, SN74LS158
- Military : SN54LS157, SN54LS158

NOTE: Qualified Version Definitions:

- Catalog - TI's standard catalog product
- Military - QML certified for Military and Defense Applications

TAPE AND REEL INFORMATION

REEL DIMENSIONS

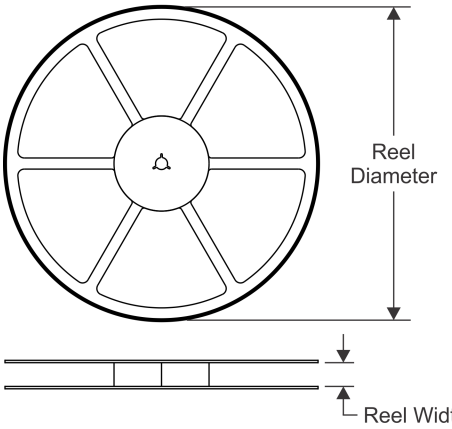

TAPE DIMENSIONS

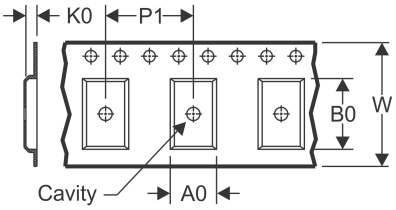

A0	Dimension designed to accommodate the component width
B0	Dimension designed to accommodate the component length
K0	Dimension designed to accommodate the component thickness
W	Overall width of the carrier tape
P1	Pitch between successive cavity centers

QUADRANT ASSIGNMENTS FOR PIN 1 ORIENTATION IN TAPE

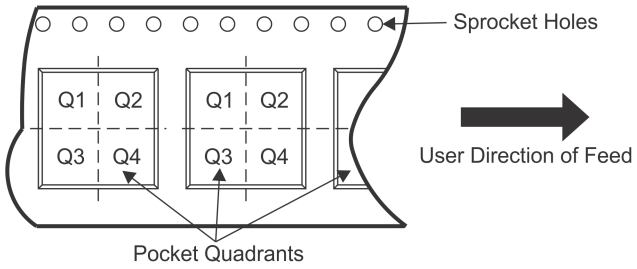

*All dimensions are nominal

Device	Package Type	Package Drawing	Pins	SPQ	Reel Diameter (mm)	Reel Width W1 (mm)	A0 (mm)	B0 (mm)	K0 (mm)	P1 (mm)	W (mm)	Pin1 Quadrant
SN74LS157DR	SOIC	D	16	2500	330.0	16.4	6.5	10.3	2.1	8.0	16.0	Q1
SN74LS157NSR	SO	NS	16	2000	330.0	16.4	8.2	10.5	2.5	12.0	16.0	Q1
SN74LS158DR	SOIC	D	16	2500	330.0	16.4	6.5	10.3	2.1	8.0	16.0	Q1
SN74LS158NSR	SO	NS	16	2000	330.0	16.4	8.2	10.5	2.5	12.0	16.0	Q1

TAPE AND REEL BOX DIMENSIONS

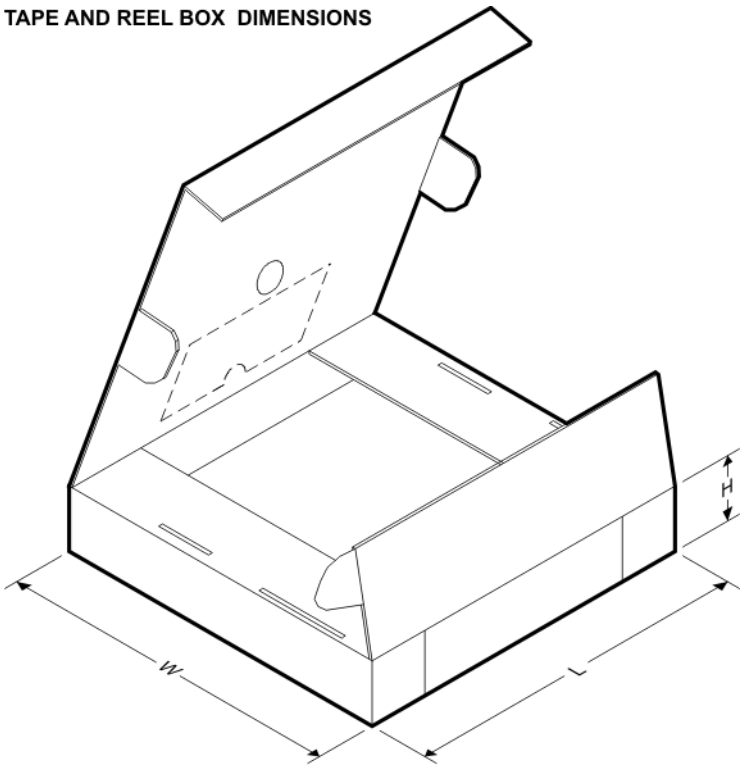

*All dimensions are nominal

Device	Package Type	Package Drawing	Pins	SPQ	Length (mm)	Width (mm)	Height (mm)
SN74LS157DR	SOIC	D	16	2500	340.5	336.1	32.0
SN74LS157NSR	SO	NS	16	2000	853.0	449.0	35.0
SN74LS158DR	SOIC	D	16	2500	340.5	336.1	32.0
SN74LS158NSR	SO	NS	16	2000	853.0	449.0	35.0

TUBE

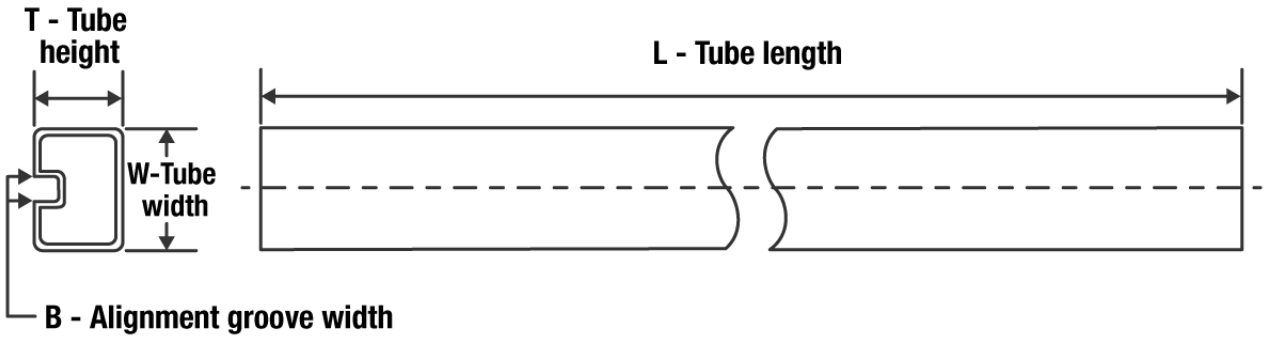

*All dimensions are nominal

Device	Package Name	Package Type	Pins	SPQ	L (mm)	W (mm)	T (µm)	B (mm)
76002012A	FK	LCCC	20	1	506.98	12.06	2030	NA
76033012A	FK	LCCC	20	1	506.98	12.06	2030	NA
JM38510/30903B2A	FK	LCCC	20	1	506.98	12.06	2030	NA
M38510/30903B2A	FK	LCCC	20	1	506.98	12.06	2030	NA
SN74LS157D	D	SOIC	16	40	507	8	3940	4.32
SN74LS157DE4	D	SOIC	16	40	507	8	3940	4.32
SN74LS157N	N	PDIP	16	25	506	13.97	11230	4.32
SN74LS157N	N	PDIP	16	25	506	13.97	11230	4.32
SN74LS157NE4	N	PDIP	16	25	506	13.97	11230	4.32
SN74LS157NE4	N	PDIP	16	25	506	13.97	11230	4.32
SN74LS158D	D	SOIC	16	40	507	8	3940	4.32
SN74LS158DE4	D	SOIC	16	40	507	8	3940	4.32
SN74LS158N	N	PDIP	16	25	506	13.97	11230	4.32
SN74LS158N	N	PDIP	16	25	506	13.97	11230	4.32
SNJ54LS157FK	FK	LCCC	20	1	506.98	12.06	2030	NA
SNJ54LS158FK	FK	LCCC	20	1	506.98	12.06	2030	NA
SNJ54S157FK	FK	LCCC	20	1	506.98	12.06	2030	NA

N (R–PDIP–T**)

PLASTIC DUAL–IN–LINE PACKAGE

16 PINS SHOWN

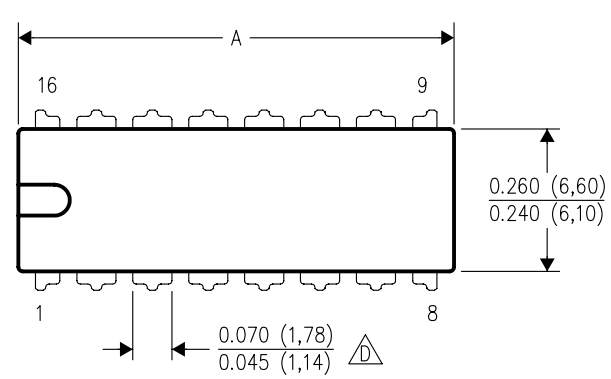

DIM \ PINS **	14	16	18	20
A MAX	0.775 (19,69)	0.775 (19,69)	0.920 (23,37)	1.060 (26,92)
A MIN	0.745 (18,92)	0.745 (18,92)	0.850 (21,59)	0.940 (23,88)
MS–001 VARIATION (C)	AA	BB	AC	AD

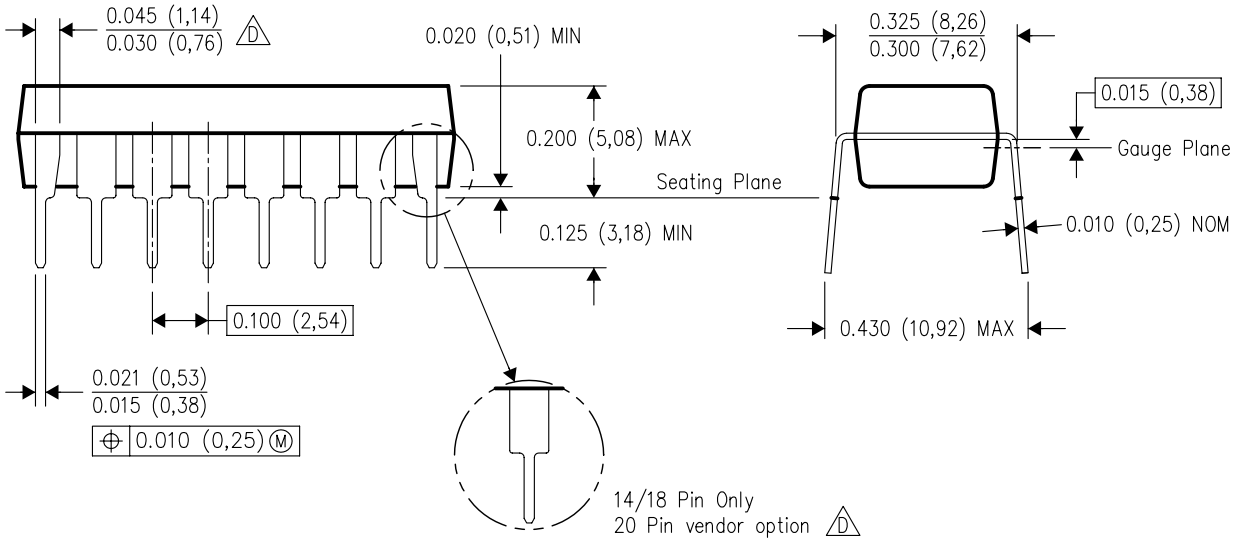

4040049/E 12/2002

NOTES:
A. All linear dimensions are in inches (millimeters).
B. This drawing is subject to change without notice.
C. Falls within JEDEC MS–001, except 18 and 20 pin minimum body length (Dim A).
D. The 20 pin end lead shoulder width is a vendor option, either half or full width.

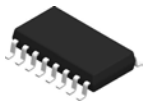

PACKAGE OUTLINE

NS0016A

SOP - 2.00 mm max height

SOP

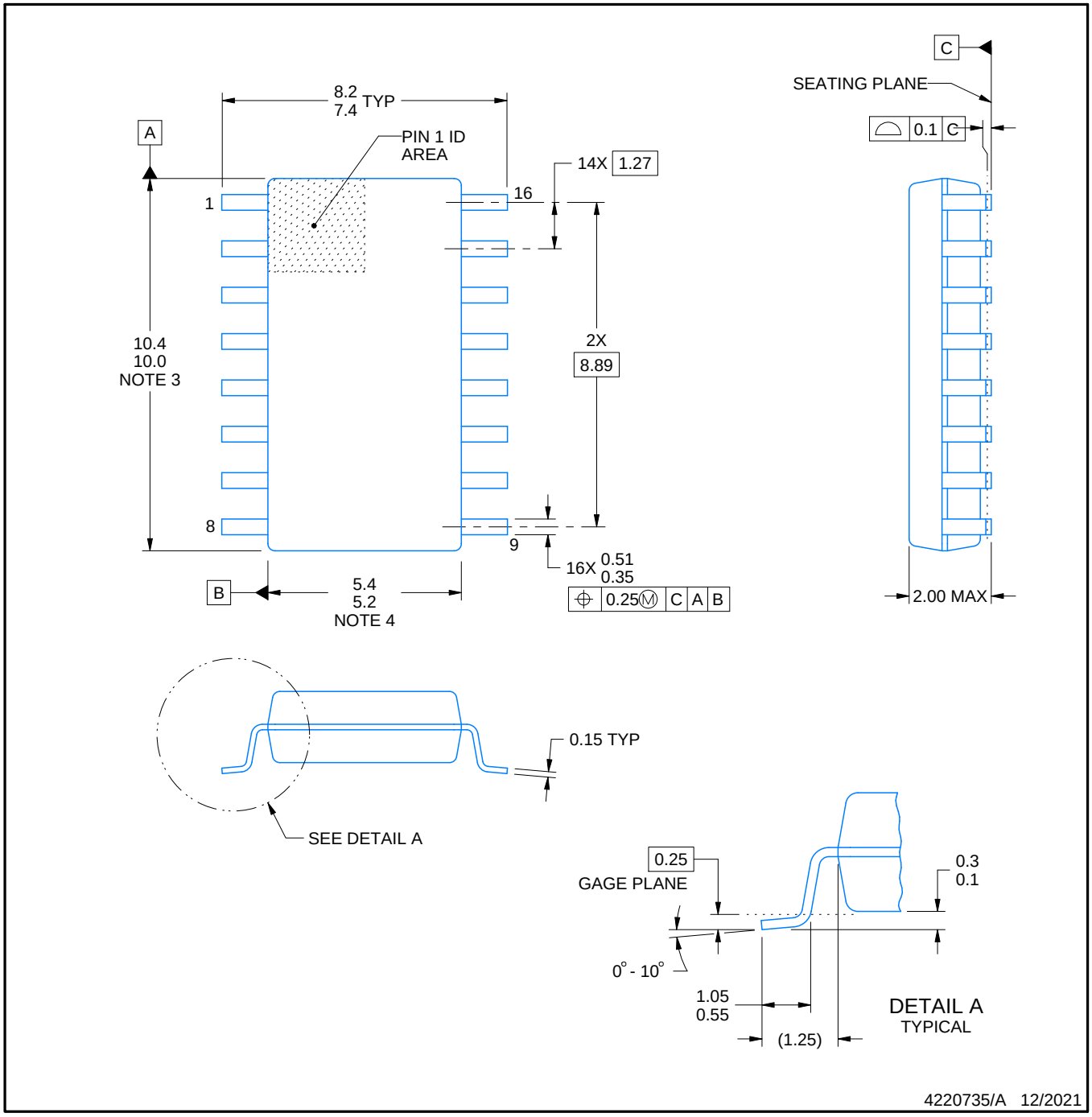

NOTES:

1. All linear dimensions are in millimeters. Dimensions in parenthesis are for reference only. Dimensioning and tolerancing per ASME Y14.5M.
2. This drawing is subject to change without notice.
3. This dimension does not include mold flash, protrusions, or gate burrs. Mold flash, protrusions, or gate burrs shall not exceed 0.15 mm, per side.
4. This dimension does not include interlead flash. Interlead flash shall not exceed 0.25 mm, per side.

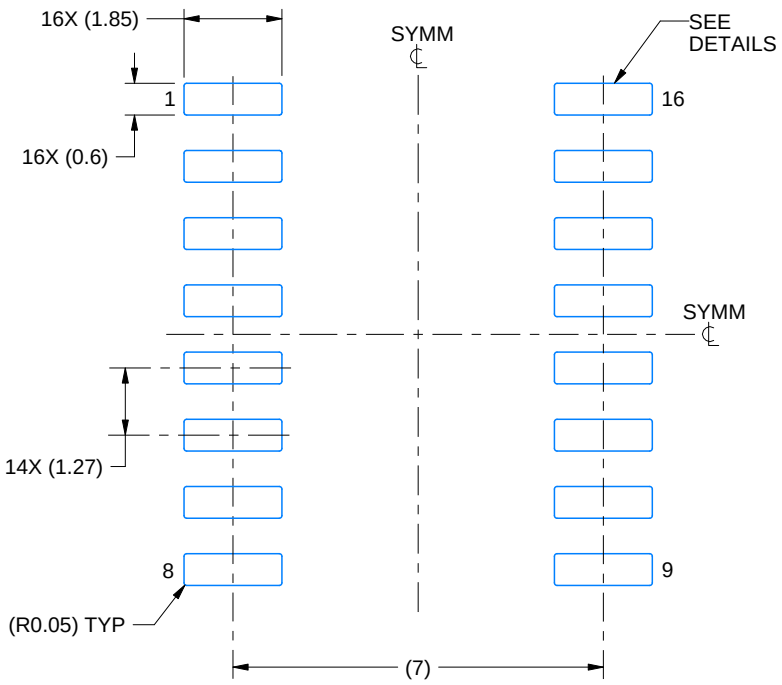

LAND PATTERN EXAMPLE
SCALE:7X

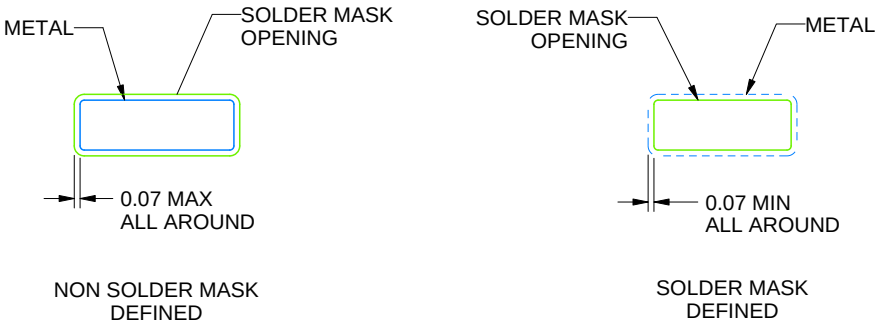

NON SOLDER MASK
DEFINED

SOLDER MASK
DEFINED

SOLDER MASK DETAILS

4220735/A 12/2021

NOTES: (continued)

5. Publication IPC-7351 may have alternate designs.
6. Solder mask tolerances between and around signal pads can vary based on board fabrication site.

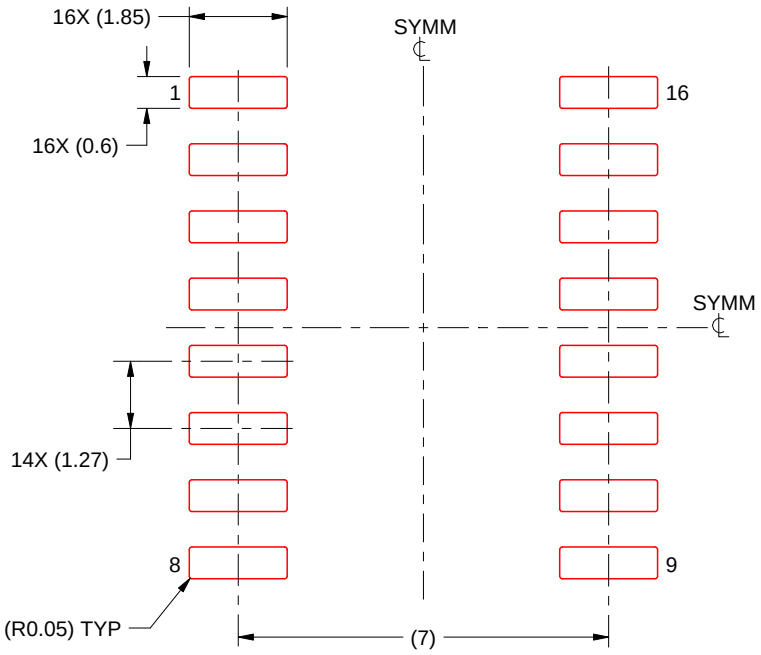

SOLDER PASTE EXAMPLE
BASED ON 0.125 mm THICK STENCIL
SCALE:7X

4220735/A 12/2021

NOTES: (continued)

7. Laser cutting apertures with trapezoidal walls and rounded corners may offer better paste release. IPC-7525 may have alternate design recommendations.
8. Board assembly site may have different recommendations for stencil design.

FK (S–CQCC–N**) LEADLESS CERAMIC CHIP CARRIER

28 TERMINAL SHOWN

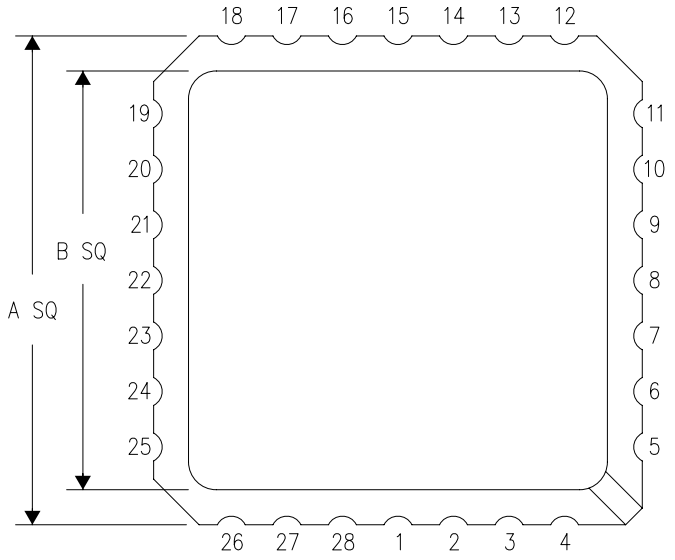

NO. OF TERMINALS **	A		B	
	MIN	MAX	MIN	MAX
20	0.342 (8,69)	0.358 (9,09)	0.307 (7,80)	0.358 (9,09)
28	0.442 (11,23)	0.458 (11,63)	0.406 (10,31)	0.458 (11,63)
44	0.640 (16,26)	0.660 (16,76)	0.495 (12,58)	0.560 (14,22)
52	0.740 (18,78)	0.761 (19,32)	0.495 (12,58)	0.560 (14,22)
68	0.938 (23,83)	0.962 (24,43)	0.850 (21,6)	0.858 (21,8)
84	1.141 (28,99)	1.165 (29,59)	1.047 (26,6)	1.063 (27,0)

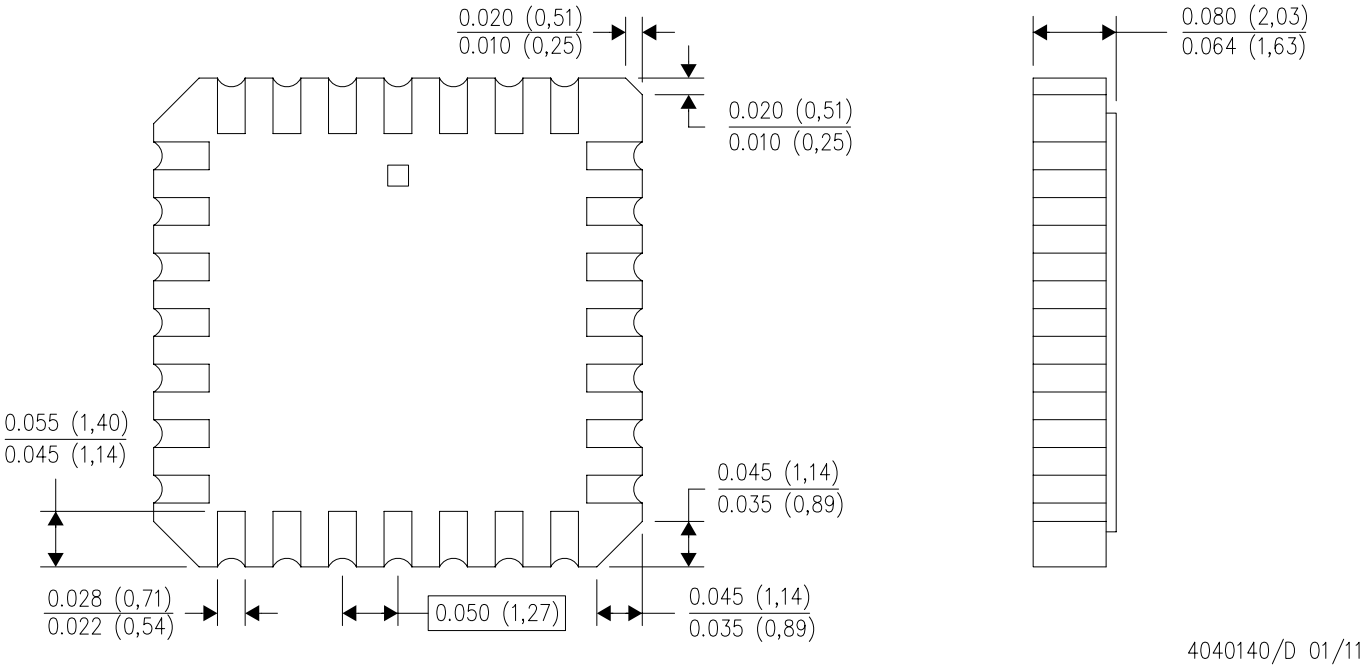

4040140/D 01/11

NOTES:
A. All linear dimensions are in inches (millimeters).
B. This drawing is subject to change without notice.
C. This package can be hermetically sealed with a metal lid.
D. Falls within JEDEC MS–004

D (R–PDSO–G16) PLASTIC SMALL OUTLINE

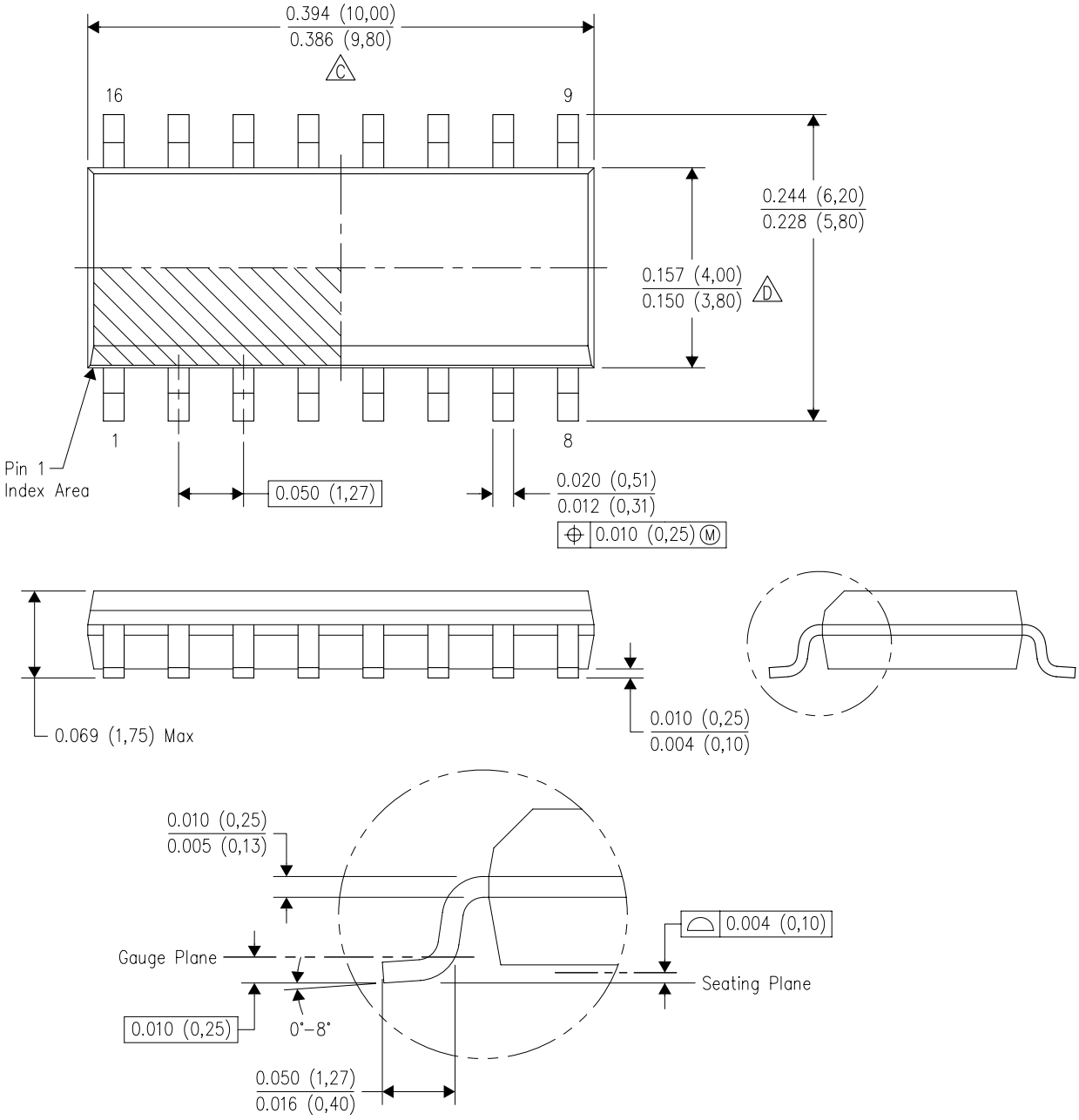

NOTES:
A. All linear dimensions are in inches (millimeters).
B. This drawing is subject to change without notice.
C. Body length does not include mold flash, protrusions, or gate burrs. Mold flash, protrusions, or gate burrs shall not exceed 0.006 (0,15) each side.
D. Body width does not include interlead flash. Interlead flash shall not exceed 0.017 (0,43) each side.
E. Reference JEDEC MS–012 variation AC.

D (R–PDSO–G16) PLASTIC SMALL OUTLINE

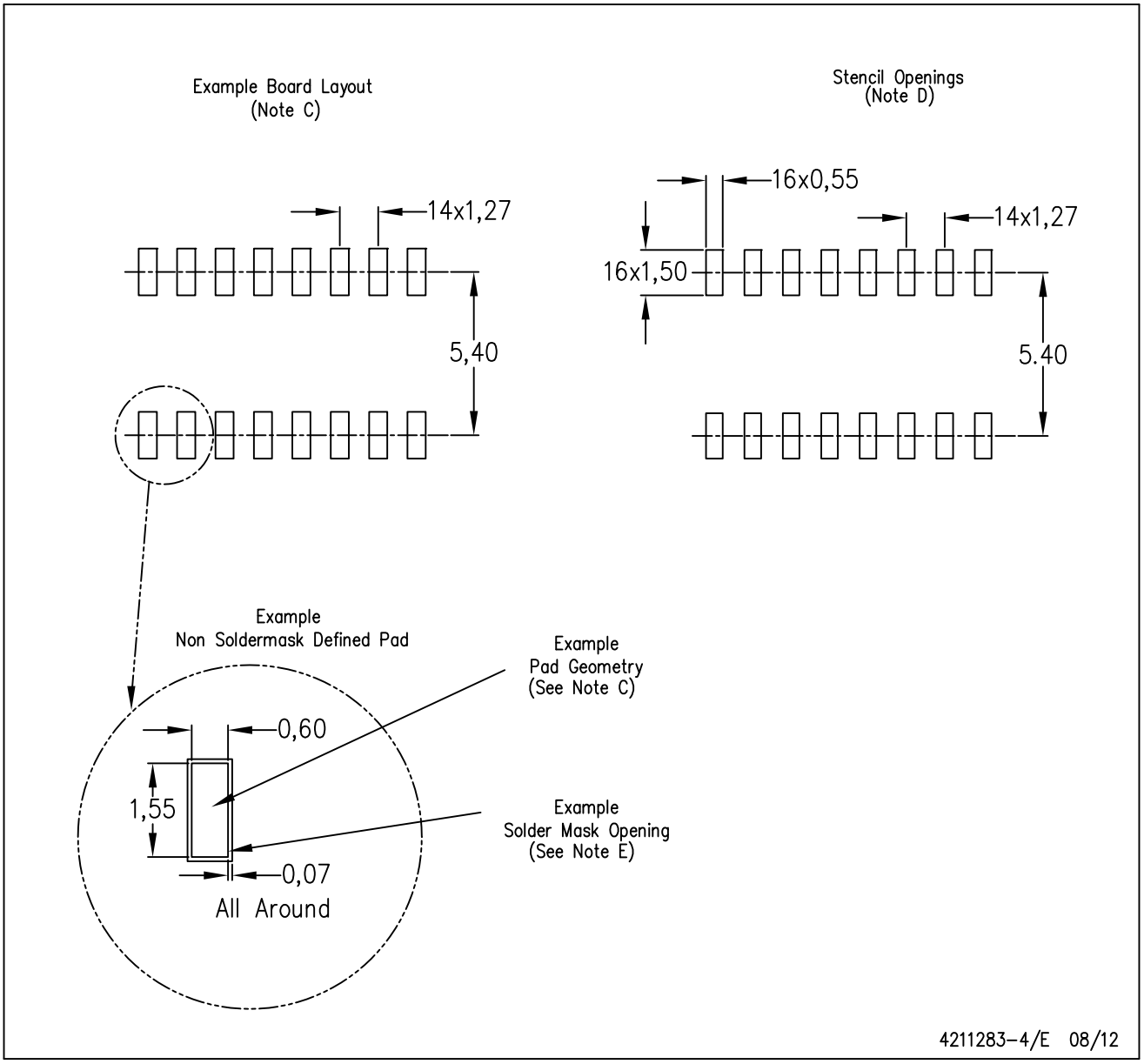

NOTES:
A. All linear dimensions are in millimeters.
B. This drawing is subject to change without notice.
C. Publication IPC–7351 is recommended for alternate designs.
D. Laser cutting apertures with trapezoidal walls and also rounding corners will offer better paste release. Customers should contact their board assembly site for stencil design recommendations. Refer to IPC–7525 for other stencil recommendations.
E. Customers should contact their board fabrication site for solder mask tolerances between and around signal pads.

MECHANICAL DATA

NS (R-PDSO-G)** **PLASTIC SMALL-OUTLINE PACKAGE**

14-PINS SHOWN

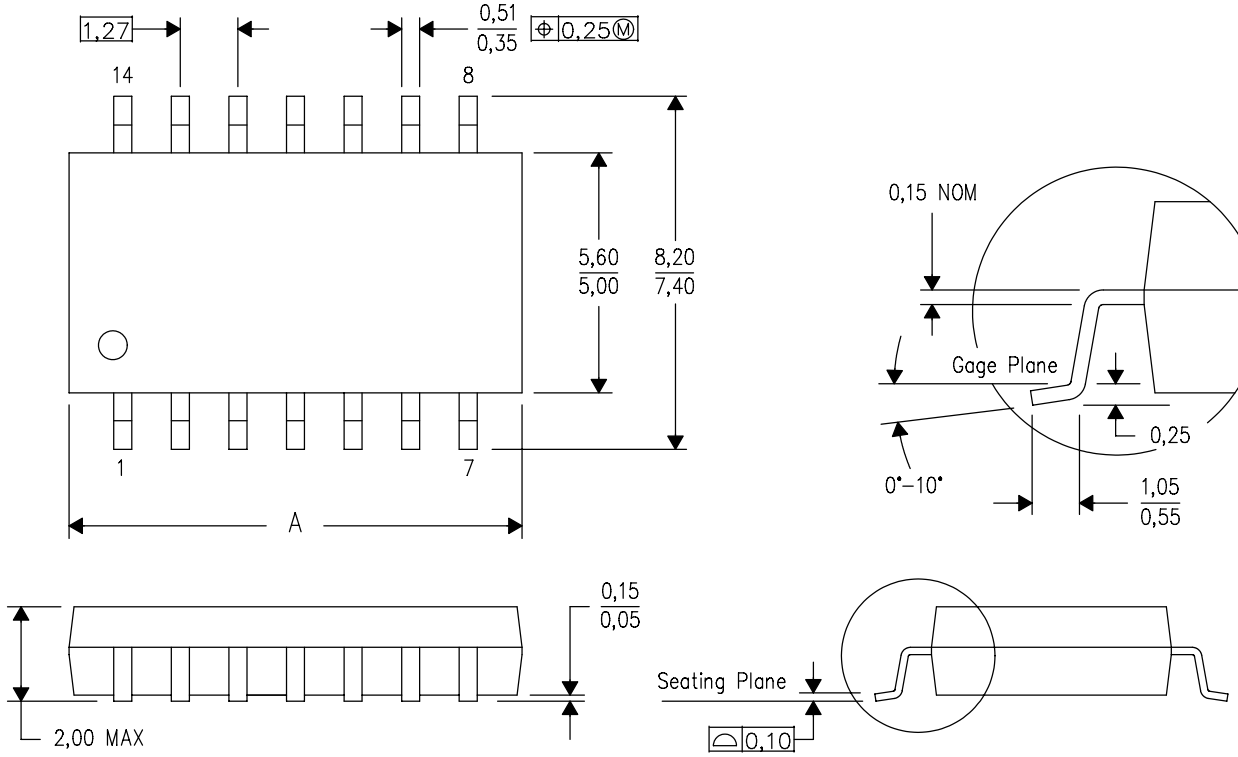

DIM \ PINS **	14	16	20	24
A MAX	10,50	10,50	12,90	15,30
A MIN	9,90	9,90	12,30	14,70

4040062/C 03/03

NOTES:
A. All linear dimensions are in millimeters.
B. This drawing is subject to change without notice.
C. Body dimensions do not include mold flash or protrusion, not to exceed 0,15.

W (R–GDFP–F16) CERAMIC DUAL FLATPACK

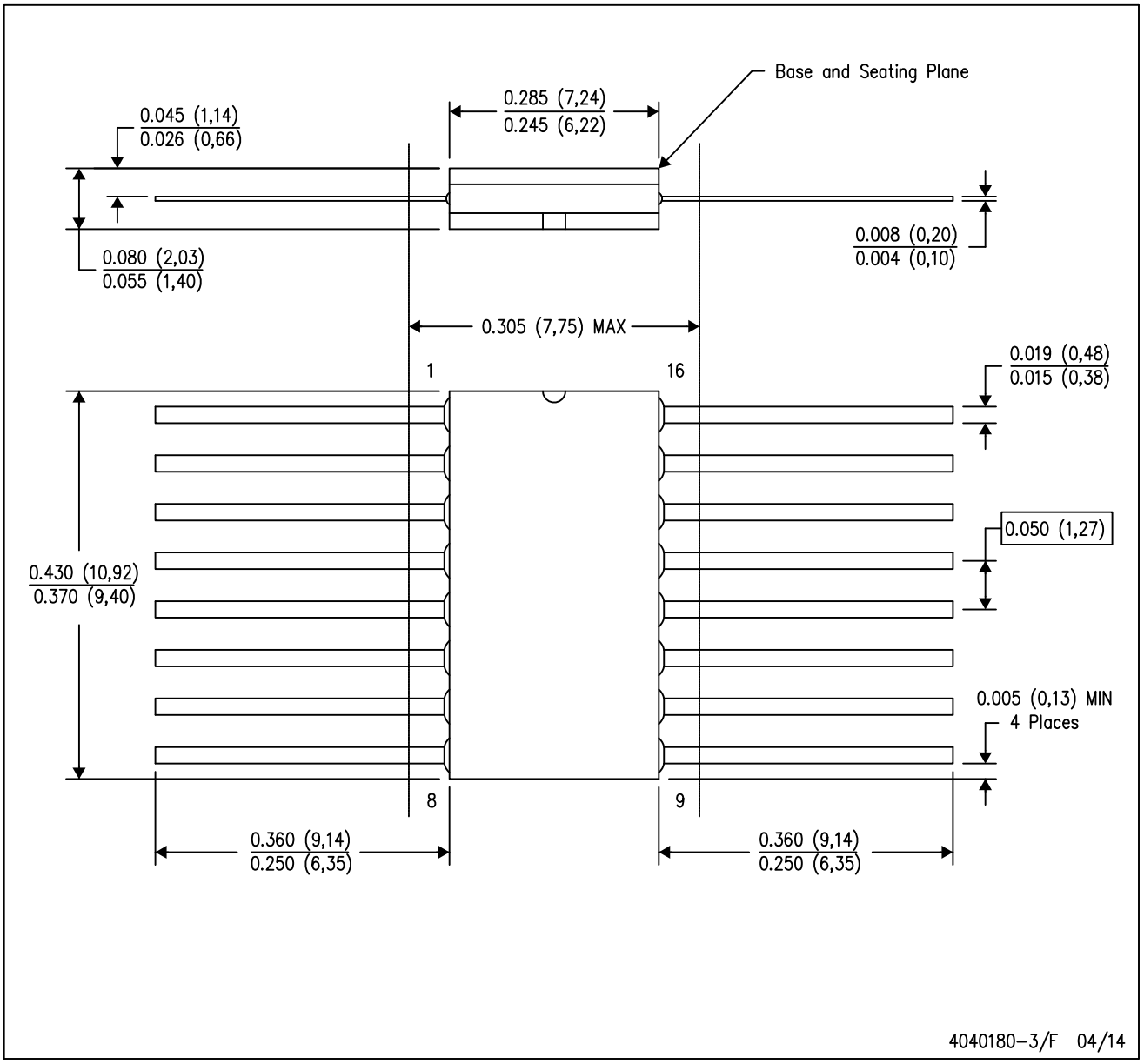

NOTES:
A. All linear dimensions are in inches (millimeters).
B. This drawing is subject to change without notice.
C. This package can be hermetically sealed with a ceramic lid using glass frit.
D. Index point is provided on cap for terminal identification only.
E. Falls within MIL STD 1835 GDFP2–F16

J (R–GDIP–T**)

14 LEADS SHOWN

CERAMIC DUAL IN–LINE PACKAGE

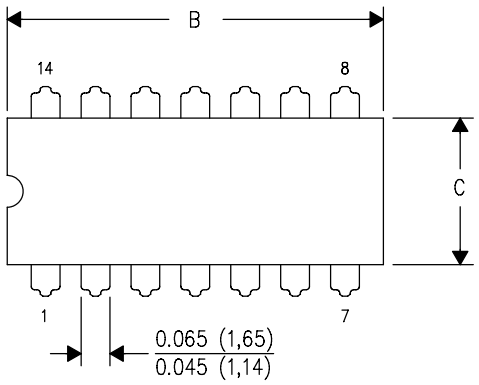

DIM \ PINS **	14	16	18	20
A	0.300 (7,62) BSC	0.300 (7,62) BSC	0.300 (7,62) BSC	0.300 (7,62) BSC
B MAX	0.785 (19,94)	.840 (21,34)	0.960 (24,38)	1.060 (26,92)
B MIN	—	—	—	—
C MAX	0.300 (7,62)	0.300 (7,62)	0.310 (7,87)	0.300 (7,62)
C MIN	0.245 (6,22)	0.245 (6,22)	0.220 (5,59)	0.245 (6,22)

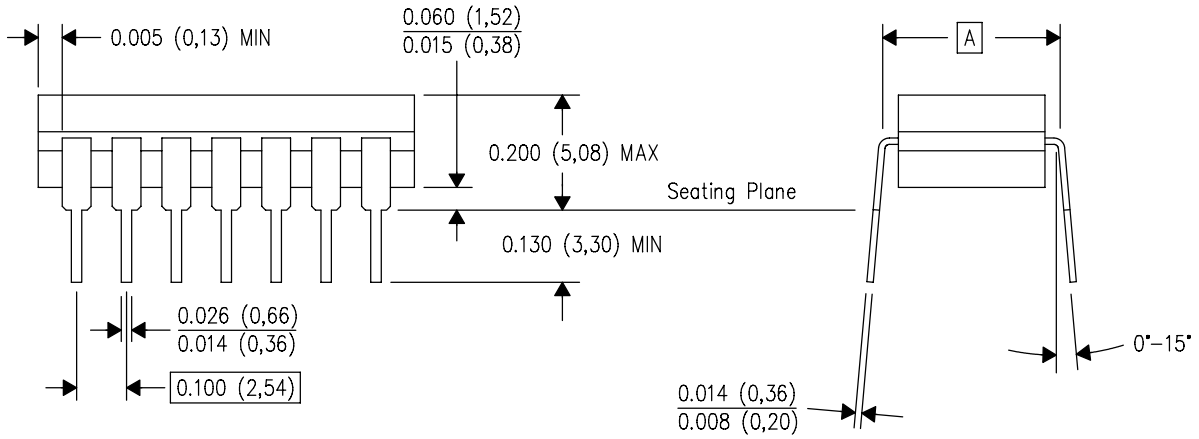

4040083/F 03/03

NOTES:
A. All linear dimensions are in inches (millimeters).
B. This drawing is subject to change without notice.
C. This package is hermetically sealed with a ceramic lid using glass frit.
D. Index point is provided on cap for terminal identification only on press ceramic glass frit seal only.
E. Falls within MIL STD 1835 GDIP1–T14, GDIP1–T16, GDIP1–T18 and GDIP1–T20.

IMPORTANT NOTICE AND DISCLAIMER

TI PROVIDES TECHNICAL AND RELIABILITY DATA (INCLUDING DATA SHEETS), DESIGN RESOURCES (INCLUDING REFERENCE DESIGNS), APPLICATION OR OTHER DESIGN ADVICE, WEB TOOLS, SAFETY INFORMATION, AND OTHER RESOURCES “AS IS” AND WITH ALL FAULTS, AND DISCLAIMS ALL WARRANTIES, EXPRESS AND IMPLIED, INCLUDING WITHOUT LIMITATION ANY IMPLIED WARRANTIES OF MERCHANTABILITY, FITNESS FOR A PARTICULAR PURPOSE OR NON-INFRINGEMENT OF THIRD PARTY INTELLECTUAL PROPERTY RIGHTS.

These resources are intended for skilled developers designing with TI products. You are solely responsible for (1) selecting the appropriate TI products for your application, (2) designing, validating and testing your application, and (3) ensuring your application meets applicable standards, and any other safety, security, regulatory or other requirements.

These resources are subject to change without notice. TI grants you permission to use these resources only for development of an application that uses the TI products described in the resource. Other reproduction and display of these resources is prohibited. No license is granted to any other TI intellectual property right or to any third party intellectual property right. TI disclaims responsibility for, and you will fully indemnify TI and its representatives against, any claims, damages, costs, losses, and liabilities arising out of your use of these resources.

TI’s products are provided subject to TI’s Terms of Sale or other applicable terms available either on ti.com or provided in conjunction with such TI products. TI’s provision of these resources does not expand or otherwise alter TI’s applicable warranties or warranty disclaimers for TI products.

TI objects to and rejects any additional or different terms you may have proposed.

Mailing Address: Texas Instruments, Post Office Box 655303, Dallas, Texas 75265
Copyright © 2022, Texas Instruments Incorporated