The SN54165 and SN74165 devices are obsolete and are no longer supplied.

SDLS062D – OCTOBER 1976 – REVISED FEBRUARY 2002

- **Complementary Outputs**
- **Direct Overriding Load (Data) Inputs**
- **Gated Clock Inputs**
- **Parallel-to-Serial Data Conversion**

TYPE	TYPICAL MAXIMUM CLOCK FREQUENCY	TYPICAL POWER DISSIPATION
’165	26 MHz	210 mW
’LS165A	35 MHz	90 mW

SN54165, SN54LS165A . . . J OR W PACKAGE
SN74165 . . . N PACKAGE
SN74LS165A . . . D, N, OR NS PACKAGE
(TOP VIEW)

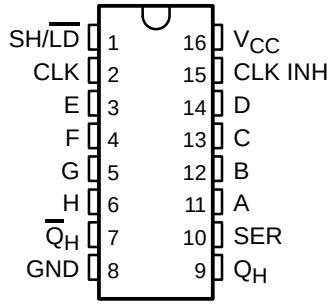

SN54LS165A . . . FK PACKAGE
(TOP VIEW)

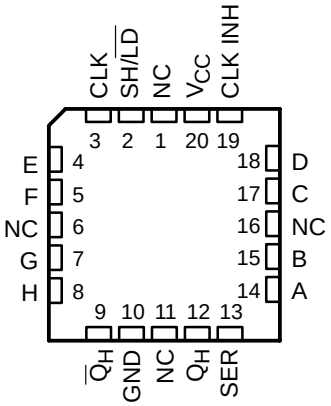

NC – No internal connection

description

The ’165 and ’LS165A are 8-bit serial shift registers that shift the data in the direction of Q_A toward Q_H when clocked. Parallel-in access to each stage is made available by eight individual, direct data inputs that are enabled by a low level at the shift/load (SH/$\overline{LD}$) input. These registers also feature gated clock (CLK) inputs and complementary outputs from the eighth bit. All inputs are diode-clamped to minimize transmission-line effects, thereby simplifying system design.

Clocking is accomplished through a two-input positive-NOR gate, permitting one input to be used as a clock-inhibit function. Holding either of the clock inputs high inhibits clocking, and holding either clock input low with SH/$\overline{LD}$ high enables the other clock input. Clock inhibit (CLK INH) should be changed to the high level only while CLK is high. Parallel loading is inhibited as long as SH/$\overline{LD}$ is high. Data at the parallel inputs are loaded directly into the register while SH/$\overline{LD}$ is low, independently of the levels of CLK, CLK INH, or serial (SER) inputs.

Please be aware that an important notice concerning availability, standard warranty, and use in critical applications of Texas Instruments semiconductor products and disclaimers thereto appears at the end of this data sheet.

PRODUCTION DATA information is current as of publication date. Products conform to specifications per the terms of Texas Instruments standard warranty. Production processing does not necessarily include testing of all parameters.

Copyright © 2002, Texas Instruments Incorporated

On products compliant to MIL-PRF-38535, all parameters are tested unless otherwise noted. On all other products, production processing does not necessarily include testing of all parameters.

The SN54165 and SN74165 devices are obsolete and are no longer supplied.

ORDERING INFORMATION

T_A	PACKAGE†		ORDERABLE PART NUMBER	TOP-SIDE MARKING
0°C to 70°C	PDIP – N	Tube	SN74LS165AN	SN74LS165AN
	SOIC – D	Tube	SN74LS165AD	LS165A
		Tape and reel	SN74LS165ADR	
	SOP – NS	Tape and reel	SN74LS165ANSR	74LS165A
–55°C to 125°C	CDIP – J	Tube	SN54LS165AJ	SN54LS165AJ
		Tube	SNJ54LS165AJ	SNJ54LS165AJ
	CFP – W	Tube	SNJ54LS165AW	SNJ54LS165AW
	LCCC – FK	Tube	SNJ54LS165AFK	SNJ54LS165AFK

† Package drawings, standard packing quantities, thermal data, symbolization, and PCB design guidelines are available at www.ti.com/sc/package.

FUNCTION TABLE

INPUTS					INTERNAL OUTPUTS		OUTPUT Q_H
SH/$\overline{LD}$	CLK INH	CLK	SER	PARALLEL A . . . H	$\overline{Q}_A$	$\overline{Q}_B$	
L	X	X	X	a . . . h	a	b	h
H	L	L	X	X	Q_{A0}	Q_{B0}	Q_{H0}
H	L	↑	H	X	H	Q_{An}	Q_{Gn}
H	L	↑	L	X	L	Q_{An}	Q_{Gn}
H	H	X	X	X	Q_{A0}	Q_{B0}	Q_{H0}

The SN54165 and SN74165 devices are obsolete and are no longer supplied.

SDLS062D – OCTOBER 1976 – REVISED FEBRUARY 2002

schematics of inputs and outputs

'165

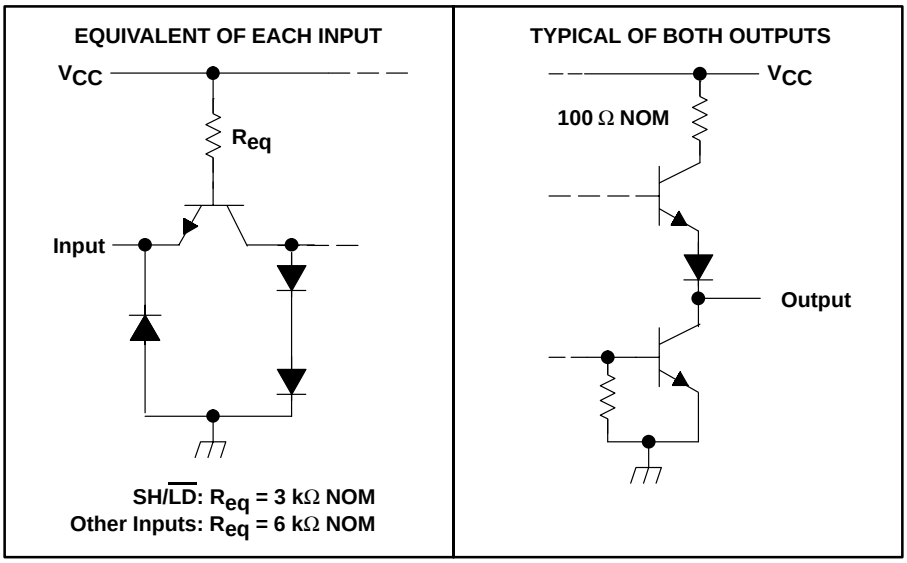

'LS165A

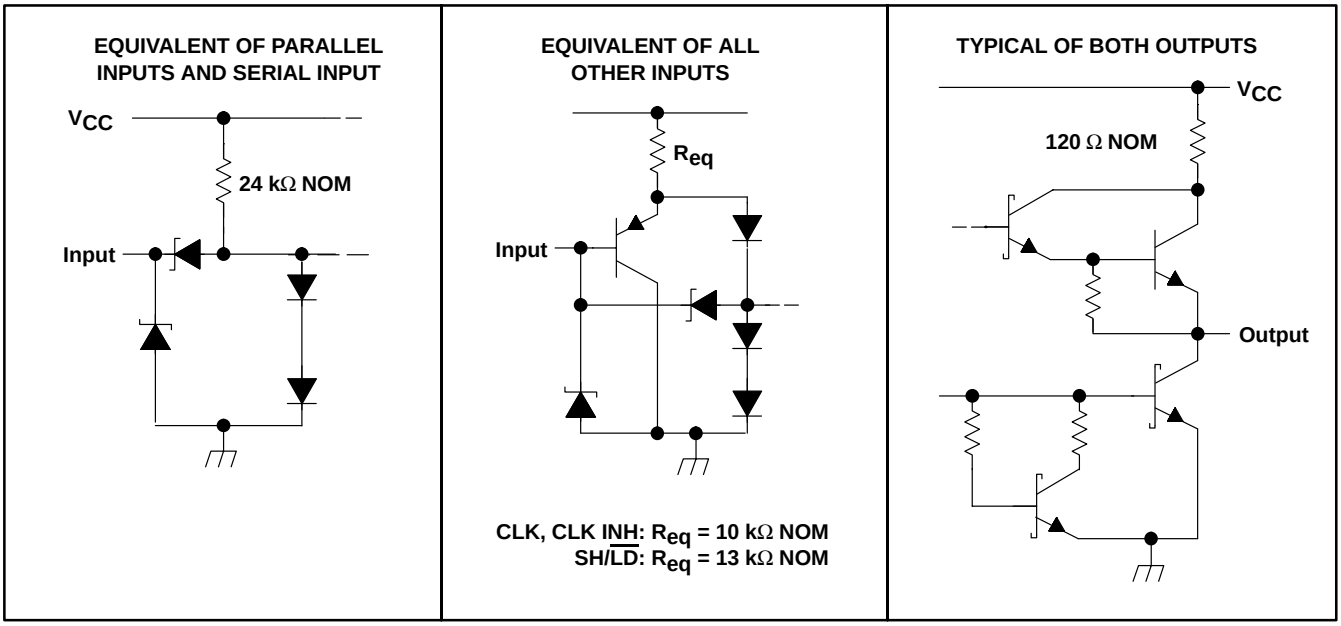

The SN54165 and SN74165 devices are obsolete and are no longer supplied.

logic diagram (positive logic)

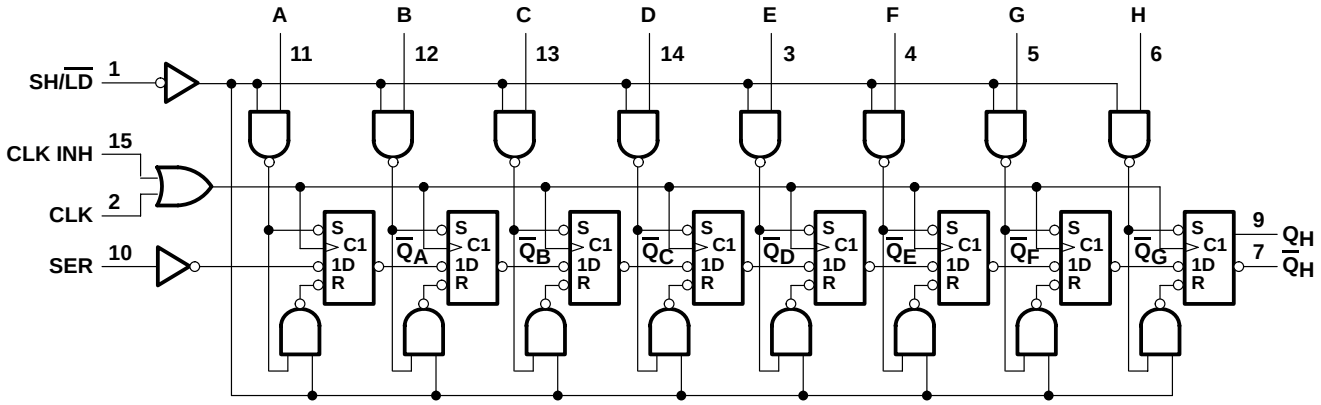

Pin numbers shown are for D, J, N, NS, and W packages.

typical shift, load, and inhibit sequences

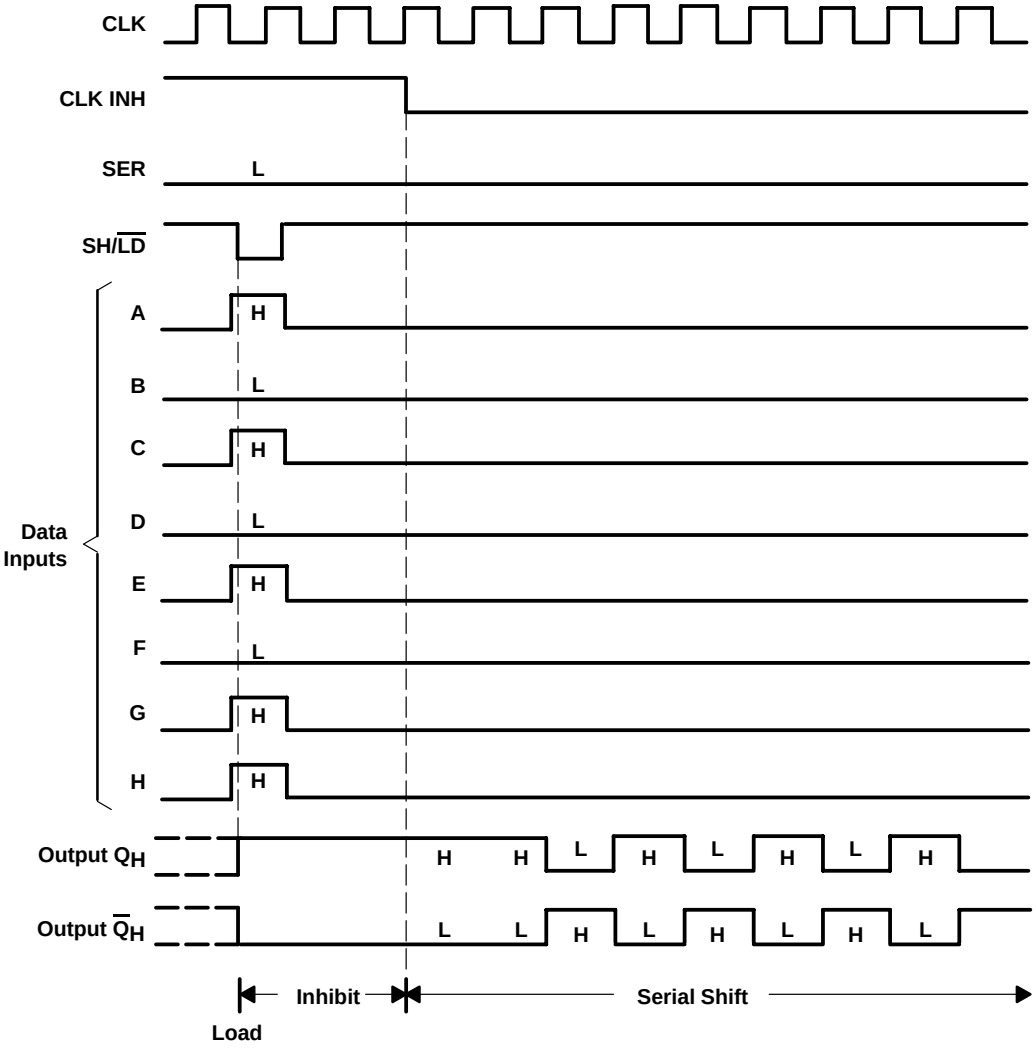

absolute maximum ratings over operating free-air temperature (unless otherwise noted)†

Supply voltage, V_{CC} (see Note 1) . . . . . 7 V
Input voltage, V_I: SN54165, SN74165 . . . . . 5.5 V
SN54LS165A, SN74LS165A . . . . . 7 V
Interemitter voltage (see Note 2) . . . . . 5.5 V
Package thermal impedance θ_{JA} (see Note 3): D package . . . . . 73°C/W
N package . . . . . 67°C/W
NS package . . . . . 64°C/W
Storage temperature range, T_{stg} . . . . . –65°C to 150°C

† Stresses beyond those listed under "absolute maximum ratings" may cause permanent damage to the device. These are stress ratings only, and functional operation of the device at these or any other conditions beyond those indicated under "recommended operating conditions" is not implied. Exposure to absolute-maximum-rated conditions for extended periods may affect device reliability.

NOTES:
1. Voltage values, except interemitter voltage, are with respect to network ground terminal.
2. This is the voltage between two emitters of a multiple-emitter transistor. This rating applies for the '165 to the SH/$\overline{LD}$ input in conjunction with the CLK INH input.
3. The package thermal impedance is calculated in accordance with JESD 51-7.

recommended operating conditions

		SN54165			SN74165			UNIT
		MIN	NOM	MAX	MIN	NOM	MAX	
V_{CC}	Supply voltage	4.5	5	5.5	4.75	5	5.25	V
I_{OH}	High-level output current			–800			–800	μA
I_{OL}	Low-level output current			16			16	mA
f_{clock}	Clock frequency	0		20	0		20	MHz
$t_{w(clock)}$	Width of clock input pulse	25			25			ns
$t_{w(load)}$	Width of load input pulse	15			15			ns
t_{su}	Clock-enable setup time (see Figure 1)	30			30			ns
t_{su}	Parallel input setup time (see Figure 1)	10			10			ns
t_{su}	Serial input setup time (see Figure 1)	20			20			ns
t_{su}	Shift setup time (see Figure 1)	45			45			ns
t_h	Hold time at any input	0			0			ns
T_A	Operating free-air temperature	–55		125	0		70	°C

The SN54165 and SN74165 devices are obsolete and are no longer supplied.

electrical characteristics over recommended operating free-air temperature range (unless otherwise noted)

PARAMETER			TEST CONDITIONS†	SN54165 MIN	SN54165 TYP‡	SN54165 MAX	SN74165 MIN	SN74165 TYP‡	SN74165 MAX	UNIT
V_{IH}	High-level input voltage			2			2			V
V_{IL}	Low-level input voltage					0.8			0.8	V
V_{IK}	Input clamp voltage		V_{CC} = MIN, I_I = –12 mA			–1.5			–1.5	V
V_{OH}	High-level output voltage		V_{CC} = MIN, V_{IH} = 2 V, V_{IL} = 0.8 V, I_{OH} = –800 μA	2.4	3.4		2.4	3.4		V
V_{OL}	Low-level output voltage		V_{CC} = MIN, V_{IH} = 2 V, V_{IL} = 0.8 V, I_{OL} = 16 mA		0.2	0.4		0.2	0.4	V
I_I	Input current at maximum input voltage		V_{CC} = MAX, V_I = 5.5 V			1			1	mA
I_{IH}	High-level input current	SH/$\overline{LD}$	V_{CC} = MAX, V_I = 2.4 V			80			80	μA
		Other inputs				40			40	
I_{IL}	Low-level input current	SH/$\overline{LD}$	V_{CC} = MAX, V_I = 0.4 V			–3.2			–3.2	mA
		Other inputs				–1.6			–1.6	
I_{OS}	Short-circuit output current§		V_{CC} = MAX	–20		–55	–18		–55	mA
I_{CC}	Supply current		V_{CC} = MAX, See Note 4		42	63		42	63	mA

NOTE 4: With the outputs open, CLK INH and CLK at 4.5 V, and a clock pulse applied to SH/$\overline{LD}$, I_{CC} is measured first with the parallel inputs at 4.5 V, then with the parallel inputs grounded.

† For conditions shown as MIN or MAX, use the appropriate values specified under recommended operating conditions.

‡ All typical values are at V_{CC} = 5 V, T_A = 25°C.

§ Not more than one output should be shorted at a time.

SN54165 and SN74165 switching characteristics, V_{CC} = 5 V, T_A = 25°C (see Figure 1)

PARAMETER¶	FROM (INPUT)	TO (OUTPUT)	TEST CONDITIONS	MIN	TYP	MAX	UNIT
f_{max}				20	26		MHz
t_{PLH}	$\overline{LD}$	Any	C_L = 15 pF, R_L = 400 Ω		21	31	ns
t_{PHL}					27	40	
t_{PLH}	CLK	Any	C_L = 15 pF, R_L = 400 Ω		16	24	ns
t_{PHL}					21	31	
t_{PLH}	H	Q_H	C_L = 15 pF, R_L = 400 Ω		11	17	ns
t_{PHL}					24	36	
t_{PLH}	H	$\overline{Q}_H$	C_L = 15 pF, R_L = 400 Ω		18	27	ns
t_{PHL}					18	27	

¶ f_{max} = maximum clock frequency, t_{PLH} = propagation delay time, low-to-high-level output, t_{PHL} = propagation delay time, high-to-low-level output

recommended operating conditions

			SN54LS165A			SN74LS165A			UNIT
			MIN	NOM	MAX	MIN	NOM	MAX	
V_{CC}	Supply voltage		4.5	5	5.5	4.75	5	5.25	V
V_{IH}	High-level input voltage		2			2			V
V_{IL}	Low-level input voltage				0.7			0.8	V
I_{OH}	High-level output current				–0.4			–0.4	mA
I_{OL}	Low-level output current				4			8	mA
f_{clock}	Clock frequency		0		25	0		25	MHz
$t_{w(clock)}$	Width of clock input pulse (see Figure 2)	Clock high	15			15			ns
		Clock low	25			25			
$t_{w(load)}$	Width of load input pulse	Clock high	25			25			ns
		Clock low	17			17			
t_{su}	Clock-enable setup time (see Figure 2)		30			30			ns
t_{su}	Parallel input setup time (see Figure 2)		10			10			ns
t_{su}	Serial input setup time (see Figure 2)		20			20			ns
t_{su}	Shift setup time (see Figure 2)		45			45			ns
t_h	Hold time at any input		0			0			ns
T_A	Operating free-air temperature		–55		125	0		70	°C

electrical characteristics over recommended operating free-air temperature range (unless otherwise noted)

PARAMETER	TEST CONDITIONS†				SN54LS165A			SN74LS165A			UNIT
					MIN	TYP‡	MAX	MIN	TYP‡	MAX	
V_{IK}	V_{CC} = MIN,	I_I = –18 mA					–1.5			–1.5	V
V_{OH}	V_{CC} = MIN,	V_{IH} = 2 V,	V_{IL} = MAX,	I_{OH} = –0.4 mA	2.5	3.5		2.7	3.5		V
V_{OL}	V_{CC} = MIN,	V_{IH} = 2 V,	V_{IL} = MAX	I_{OL} = 4 mA		0.25	0.4		0.25	0.4	V
				I_{OL} = 8 mA					0.35	0.5	
I_I	V_{CC} = MAX,	V_I = 7 V					0.1			0.1	mA
I_{IH}	V_{CC} = MAX,	V_I = 2.7 V					20			20	µA
I_{IL}	V_{CC} = MAX,	V_I = 0.4 V					–0.4			–0.4	mA
I_{OS}§	V_{CC} = MAX				–20		–100	–20		–100	mA
I_{CC}	V_{CC} = MAX,	See Note 4				18	30		18	30	mA

NOTE 4. With the outputs open, CLK INH and CLK at 4.5 V, and a clock pulse applied to SH/$\overline{LD}$, I_{CC} is measured first with the parallel inputs at 4.5 V, then with the parallel inputs grounded.

† For conditions shown as MIN or MAX, use the appropriate values specified under recommended operating conditions.

‡ All typical values are at V_{CC} = 5 V, T_A = 25°C.

§ Not more than one output should be shorted at a time, and the duration of the short-circuit should not exceed one second.

The SN54165 and SN74165 devices are obsolete and are no longer supplied.

SN54LS165A and SN74LS165A switching characteristics, V_{CC} = 5 V, T_A = 25°C (see Figure 2)

PARAMETER†	FROM (INPUT)	TO (OUTPUT)	TEST CONDITIONS	MIN	TYP	MAX	UNIT
f_{max}				25	35		MHz
t_{PLH}	$\overline{LD}$	Any	R_L = 2 kΩ, C_L = 15 pF		21	35	ns
t_{PHL}					26	35	
t_{PLH}	CLK	Any	R_L = 2 kΩ, C_L = 15 pF		14	25	ns
t_{PHL}					16	25	
t_{PLH}	H	Q_H	R_L = 2 kΩ, C_L = 15 pF		13	25	ns
t_{PHL}					24	30	
t_{PLH}	H	$\overline{Q}_H$	R_L = 2 kΩ, C_L = 15 pF		19	30	ns
t_{PHL}					17	25	

† f_{max} = maximum clock frequency, t_{PLH} = propagation delay time, low-to-high-level output, t_{PHL} = propagation delay time, high-to-low-level output

PARAMETER MEASUREMENT INFORMATION
SERIES 54/74 DEVICES

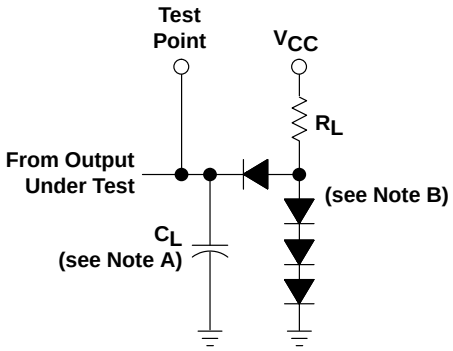

LOAD CIRCUIT
FOR 2-STATE TOTEM-POLE OUTPUTS

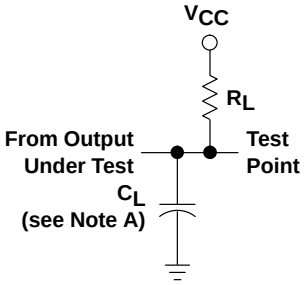

LOAD CIRCUIT
FOR OPEN-COLLECTOR OUTPUTS

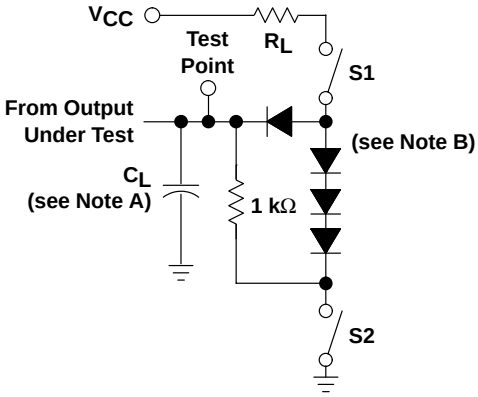

LOAD CIRCUIT
FOR 3-STATE OUTPUTS

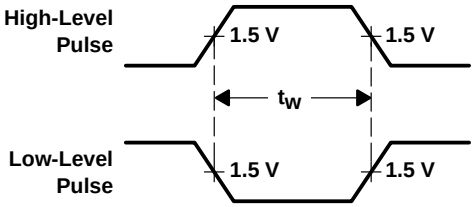

VOLTAGE WAVEFORMS
PULSE DURATIONS

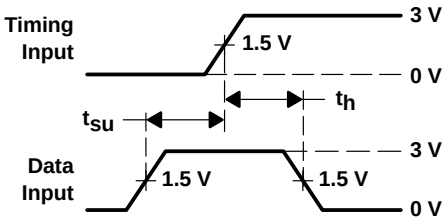

VOLTAGE WAVEFORMS
SETUP AND HOLD TIMES

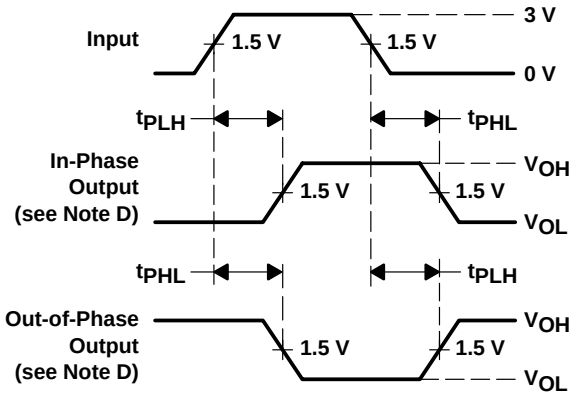

VOLTAGE WAVEFORMS
PROPAGATION DELAY TIMES

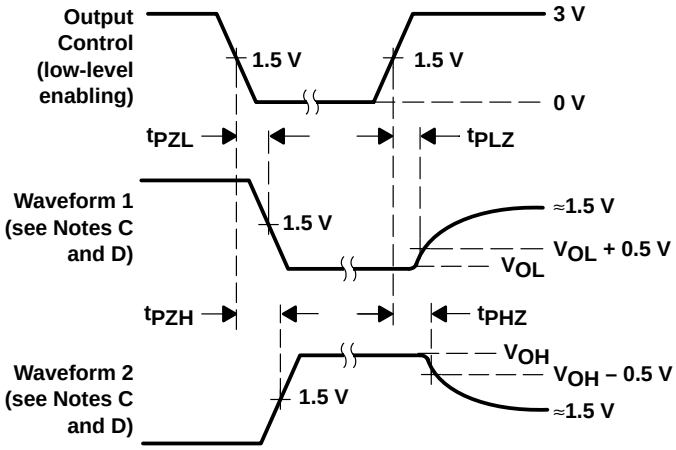

VOLTAGE WAVEFORMS
ENABLE AND DISABLE TIMES, 3-STATE OUTPUTS

NOTES:
A. C_L includes probe and jig capacitance.
B. All diodes are 1N3064 or equivalent.
C. Waveform 1 is for an output with internal conditions such that the output is low except when disabled by the output control. Waveform 2 is for an output with internal conditions such that the output is high except when disabled by the output control.
D. S1 and S2 are closed for t_{PLH}, t_{PHL}, t_{PHZ}, and t_{PLZ}; S1 is open and S2 is closed for t_{PZH}; S1 is closed and S2 is open for t_{PZL}.
E. All input pulses are supplied by generators having the following characteristics: PRR ≤ 1 MHz, $Z_O \approx 50\ \Omega$; t_r and $t_f \leq 7$ ns for Series 54/74 devices and t_r and $t_f \leq 2.5$ ns for Series 54S/74S devices.
F. The outputs are measured one at a time with one input transition per measurement.

Figure 1. Load Circuits and Voltage Waveforms

The SN54165 and SN74165 devices are obsolete and are no longer supplied.

PARAMETER MEASUREMENT INFORMATION
SERIES 54LS/74LS DEVICES

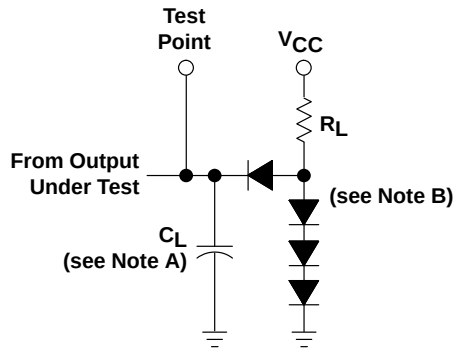

LOAD CIRCUIT
FOR 2-STATE TOTEM-POLE OUTPUTS

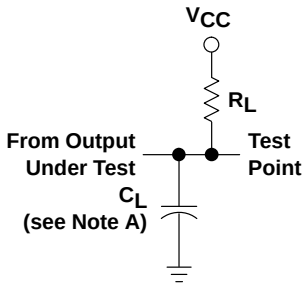

LOAD CIRCUIT
FOR OPEN-COLLECTOR OUTPUTS

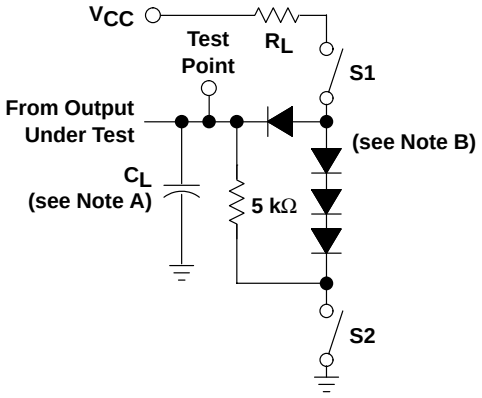

LOAD CIRCUIT
FOR 3-STATE OUTPUTS

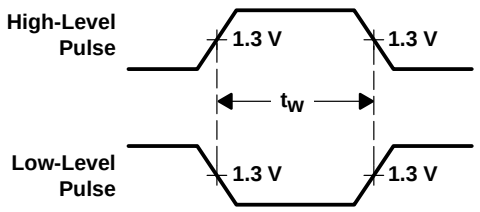

VOLTAGE WAVEFORMS
PULSE DURATIONS

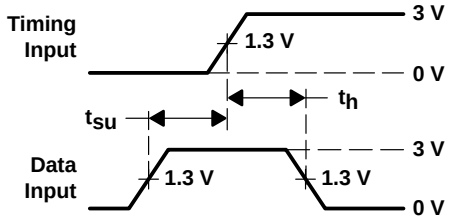

VOLTAGE WAVEFORMS
SETUP AND HOLD TIMES

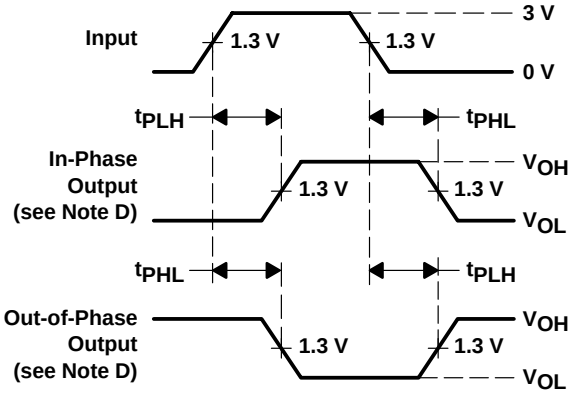

VOLTAGE WAVEFORMS
PROPAGATION DELAY TIMES

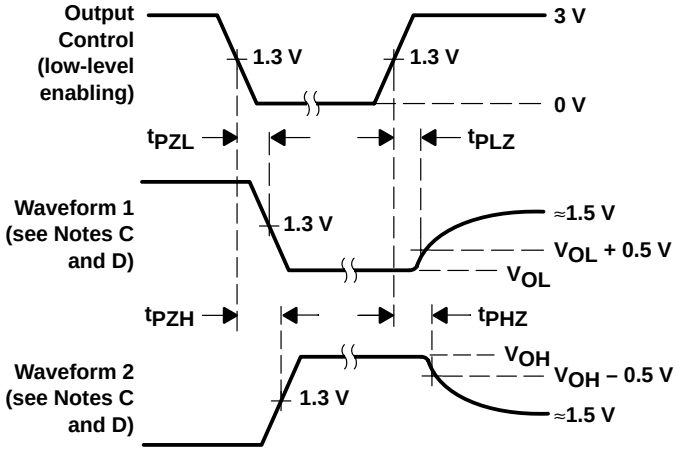

VOLTAGE WAVEFORMS
ENABLE AND DISABLE TIMES, 3-STATE OUTPUTS

NOTES: A. C_L includes probe and jig capacitance.
B. All diodes are 1N3064 or equivalent.
C. Waveform 1 is for an output with internal conditions such that the output is low except when disabled by the output control. Waveform 2 is for an output with internal conditions such that the output is high except when disabled by the output control.
D. S1 and S2 are closed for t_{PLH}, t_{PHL}, t_{PHZ}, and t_{PLZ}; S1 is open and S2 is closed for t_{PZH}; S1 is closed and S2 is open for t_{PZL}.
E. Phase relationships between inputs and outputs have been chosen arbitrarily for these examples.
F. All input pulses are supplied by generators having the following characteristics: PRR ≤ 1 MHz, $Z_O \approx 50\ \Omega$, $t_r \leq 1.5$ ns, $t_f \leq 2.6$ ns.
G. The outputs are measured one at a time with one input transition per measurement.

Figure 2. Load Circuits and Voltage Waveforms

PACKAGING INFORMATION

Orderable Device	Status (1)	Package Type	Package Drawing	Pins	Package Qty	Eco Plan (2)	Lead finish/ Ball material (6)	MSL Peak Temp (3)	Op Temp (°C)	Device Marking (4/5)	Samples
5962-7700601VEA	ACTIVE	CDIP	J	16	1	Non-RoHS & Green	SNPB	N / A for Pkg Type	-55 to 125	5962-7700601VEA SNV54LS165AJ	Samples
5962-7700601VFA	ACTIVE	CFP	W	16	1	Non-RoHS & Green	SNPB	N / A for Pkg Type	-55 to 125	5962-7700601VFA SNV54LS165AW	Samples
7700601EA	ACTIVE	CDIP	J	16	1	Non-RoHS & Green	SNPB	N / A for Pkg Type	-55 to 125	7700601EA SNJ54LS165AJ	Samples
7700601FA	ACTIVE	CFP	W	16	1	Non-RoHS & Green	SNPB	N / A for Pkg Type	-55 to 125	7700601FA SNJ54LS165AW	Samples
JM38510/30608B2A	ACTIVE	LCCC	FK	20	1	Non-RoHS & Green	SNPB	N / A for Pkg Type	-55 to 125	JM38510/ 30608B2A	Samples
JM38510/30608BEA	ACTIVE	CDIP	J	16	1	Non-RoHS & Green	SNPB	N / A for Pkg Type	-55 to 125	JM38510/ 30608BEA	Samples
JM38510/30608BFA	ACTIVE	CFP	W	16	1	Non-RoHS & Green	SNPB	N / A for Pkg Type	-55 to 125	JM38510/ 30608BFA	Samples
M38510/30608B2A	ACTIVE	LCCC	FK	20	1	Non-RoHS & Green	SNPB	N / A for Pkg Type	-55 to 125	JM38510/ 30608B2A	Samples
M38510/30608BEA	ACTIVE	CDIP	J	16	1	Non-RoHS & Green	SNPB	N / A for Pkg Type	-55 to 125	JM38510/ 30608BEA	Samples
M38510/30608BFA	ACTIVE	CFP	W	16	1	Non-RoHS & Green	SNPB	N / A for Pkg Type	-55 to 125	JM38510/ 30608BFA	Samples
SN54LS165AJ	ACTIVE	CDIP	J	16	1	Non-RoHS & Green	SNPB	N / A for Pkg Type	-55 to 125	SN54LS165AJ	Samples
SN74LS165AD	ACTIVE	SOIC	D	16	40	RoHS & Green	NIPDAU	Level-1-260C-UNLIM	0 to 70	LS165A	Samples
SN74LS165ADR	ACTIVE	SOIC	D	16	2500	RoHS & Green	NIPDAU	Level-1-260C-UNLIM	0 to 70	LS165A	Samples
SN74LS165AN	ACTIVE	PDIP	N	16	25	RoHS & Green	NIPDAU	N / A for Pkg Type	0 to 70	SN74LS165AN	Samples
SN74LS165ANE4	ACTIVE	PDIP	N	16	25	RoHS & Green	NIPDAU	N / A for Pkg Type	0 to 70	SN74LS165AN	Samples
SN74LS165ANSR	ACTIVE	SO	NS	16	2000	RoHS & Green	NIPDAU	Level-1-260C-UNLIM	0 to 70	74LS165A	Samples

Orderable Device	Status (1)	Package Type	Package Drawing	Pins	Package Qty	Eco Plan (2)	Lead finish/ Ball material (6)	MSL Peak Temp (3)	Op Temp (°C)	Device Marking (4/5)	Samples
SNJ54LS165AFK	ACTIVE	LCCC	FK	20	1	Non-RoHS & Green	SNPB	N / A for Pkg Type	-55 to 125	SNJ54LS 165AFK	Samples
SNJ54LS165AJ	ACTIVE	CDIP	J	16	1	Non-RoHS & Green	SNPB	N / A for Pkg Type	-55 to 125	7700601EA SNJ54LS165AJ	Samples
SNJ54LS165AW	ACTIVE	CFP	W	16	1	Non-RoHS & Green	SNPB	N / A for Pkg Type	-55 to 125	7700601FA SNJ54LS165AW	Samples

(1) The marketing status values are defined as follows:
ACTIVE: Product device recommended for new designs.
LIFEBUY: TI has announced that the device will be discontinued, and a lifetime-buy period is in effect.
NRND: Not recommended for new designs. Device is in production to support existing customers, but TI does not recommend using this part in a new design.
PREVIEW: Device has been announced but is not in production. Samples may or may not be available.
OBSOLETE: TI has discontinued the production of the device.

(2) **RoHS:** TI defines "RoHS" to mean semiconductor products that are compliant with the current EU RoHS requirements for all 10 RoHS substances, including the requirement that RoHS substance do not exceed 0.1% by weight in homogeneous materials. Where designed to be soldered at high temperatures, "RoHS" products are suitable for use in specified lead-free processes. TI may reference these types of products as "Pb-Free".
RoHS Exempt: TI defines "RoHS Exempt" to mean products that contain lead but are compliant with EU RoHS pursuant to a specific EU RoHS exemption.
Green: TI defines "Green" to mean the content of Chlorine (Cl) and Bromine (Br) based flame retardants meet JS709B low halogen requirements of <=1000ppm threshold. Antimony trioxide based flame retardants must also meet the <=1000ppm threshold requirement.

(3) MSL, Peak Temp. - The Moisture Sensitivity Level rating according to the JEDEC industry standard classifications, and peak solder temperature.

(4) There may be additional marking, which relates to the logo, the lot trace code information, or the environmental category on the device.

(5) Multiple Device Markings will be inside parentheses. Only one Device Marking contained in parentheses and separated by a "~" will appear on a device. If a line is indented then it is a continuation of the previous line and the two combined represent the entire Device Marking for that device.

(6) Lead finish/Ball material - Orderable Devices may have multiple material finish options. Finish options are separated by a vertical ruled line. Lead finish/Ball material values may wrap to two lines if the finish value exceeds the maximum column width.

Important Information and Disclaimer: The information provided on this page represents TI's knowledge and belief as of the date that it is provided. TI bases its knowledge and belief on information provided by third parties, and makes no representation or warranty as to the accuracy of such information. Efforts are underway to better integrate information from third parties. TI has taken and continues to take reasonable steps to provide representative and accurate information but may not have conducted destructive testing or chemical analysis on incoming materials and chemicals. TI and TI suppliers consider certain information to be proprietary, and thus CAS numbers and other limited information may not be available for release.

In no event shall TI's liability arising out of such information exceed the total purchase price of the TI part(s) at issue in this document sold by TI to Customer on an annual basis.

OTHER QUALIFIED VERSIONS OF SN54LS165A, SN54LS165A-SP, SN74LS165A :

- Catalog : SN74LS165A, SN54LS165A
- Military : SN54LS165A
- Space : SN54LS165A-SP

NOTE: Qualified Version Definitions:

- Catalog - TI's standard catalog product
- Military - QML certified for Military and Defense Applications
- Space - Radiation tolerant, ceramic packaging and qualified for use in Space-based application

TAPE AND REEL INFORMATION

REEL DIMENSIONS

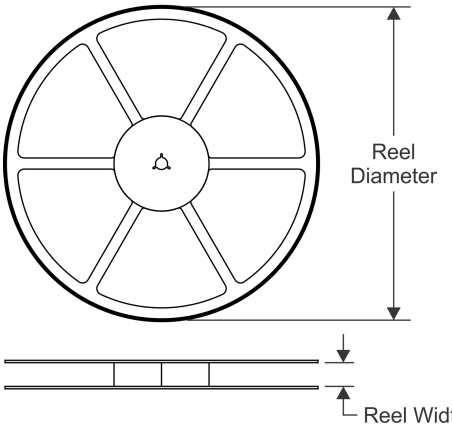

TAPE DIMENSIONS

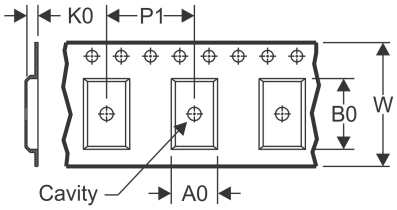

A0	Dimension designed to accommodate the component width
B0	Dimension designed to accommodate the component length
K0	Dimension designed to accommodate the component thickness
W	Overall width of the carrier tape
P1	Pitch between successive cavity centers

QUADRANT ASSIGNMENTS FOR PIN 1 ORIENTATION IN TAPE

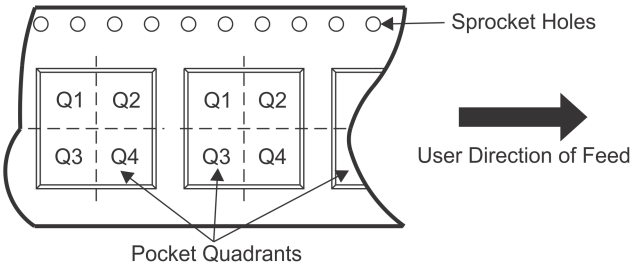

*All dimensions are nominal

Device	Package Type	Package Drawing	Pins	SPQ	Reel Diameter (mm)	Reel Width W1 (mm)	A0 (mm)	B0 (mm)	K0 (mm)	P1 (mm)	W (mm)	Pin1 Quadrant
SN74LS165ADR	SOIC	D	16	2500	330.0	16.4	6.5	10.3	2.1	8.0	16.0	Q1
SN74LS165ANSR	SO	NS	16	2000	330.0	16.4	8.2	10.5	2.5	12.0	16.0	Q1

TAPE AND REEL BOX DIMENSIONS

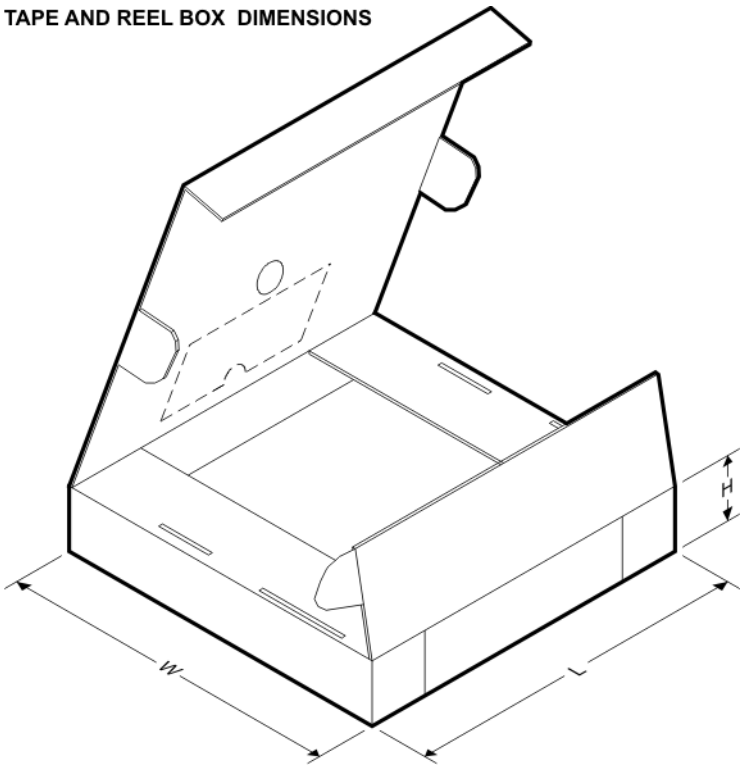

*All dimensions are nominal

Device	Package Type	Package Drawing	Pins	SPQ	Length (mm)	Width (mm)	Height (mm)
SN74LS165ADR	SOIC	D	16	2500	340.5	336.1	32.0
SN74LS165ANSR	SO	NS	16	2000	367.0	367.0	38.0

TUBE

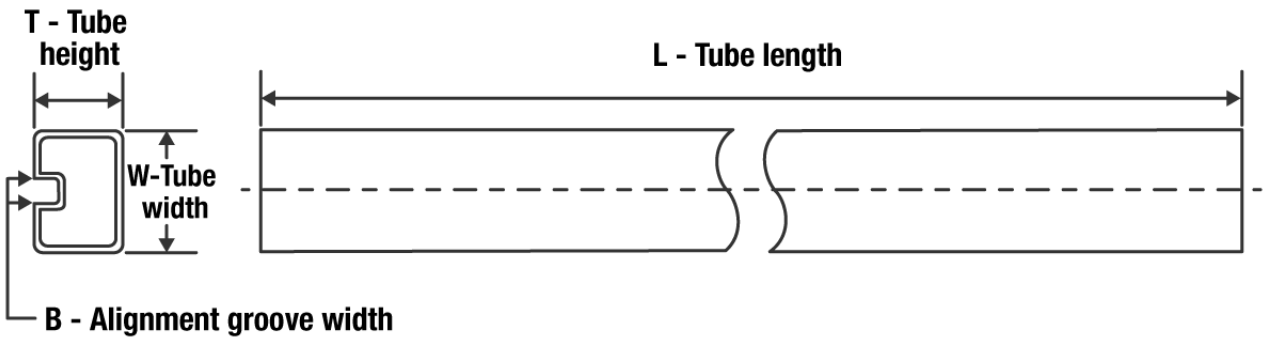

*All dimensions are nominal

Device	Package Name	Package Type	Pins	SPQ	L (mm)	W (mm)	T (µm)	B (mm)
5962-7700601VFA	W	CFP	16	1	506.98	26.16	6220	NA
JM38510/30608B2A	FK	LCCC	20	1	506.98	12.06	2030	NA
JM38510/30608BFA	W	CFP	16	1	506.98	26.16	6220	NA
M38510/30608B2A	FK	LCCC	20	1	506.98	12.06	2030	NA
M38510/30608BFA	W	CFP	16	1	506.98	26.16	6220	NA
SN74LS165AD	D	SOIC	16	40	507	8	3940	4.32
SN74LS165AN	N	PDIP	16	25	506	13.97	11230	4.32
SN74LS165AN	N	PDIP	16	25	506	13.97	11230	4.32
SN74LS165ANE4	N	PDIP	16	25	506	13.97	11230	4.32
SN74LS165ANE4	N	PDIP	16	25	506	13.97	11230	4.32
SNJ54LS165AFK	FK	LCCC	20	1	506.98	12.06	2030	NA

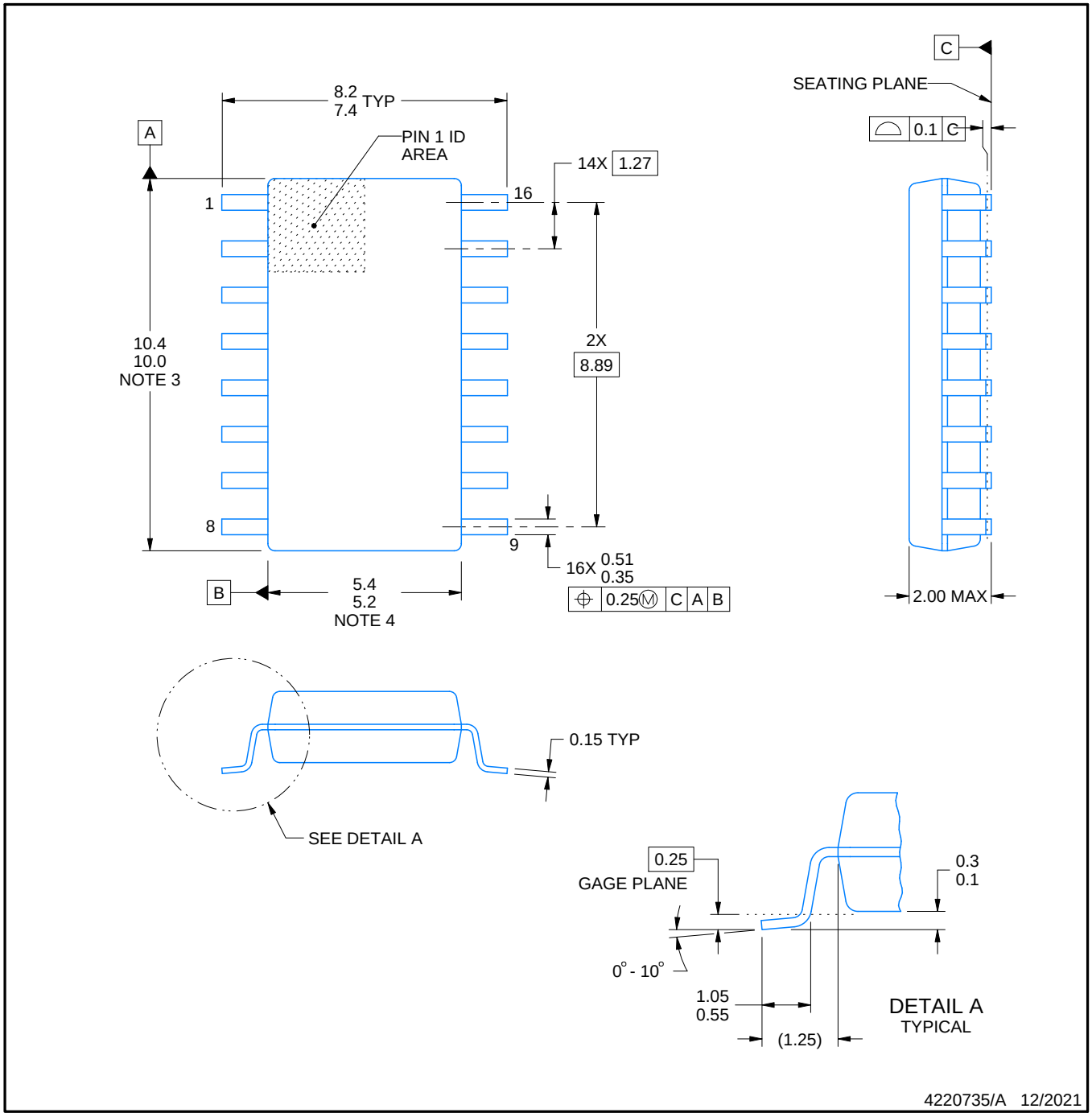

NOTES:

1. All linear dimensions are in millimeters. Dimensions in parenthesis are for reference only. Dimensioning and tolerancing per ASME Y14.5M.
2. This drawing is subject to change without notice.
3. This dimension does not include mold flash, protrusions, or gate burrs. Mold flash, protrusions, or gate burrs shall not exceed 0.15 mm, per side.
4. This dimension does not include interlead flash. Interlead flash shall not exceed 0.25 mm, per side.

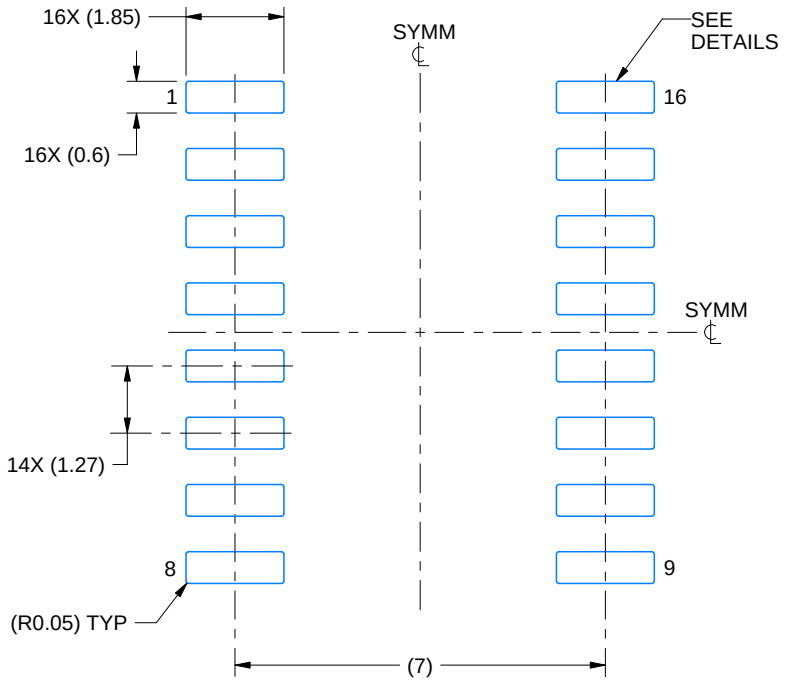

LAND PATTERN EXAMPLE
SCALE:7X

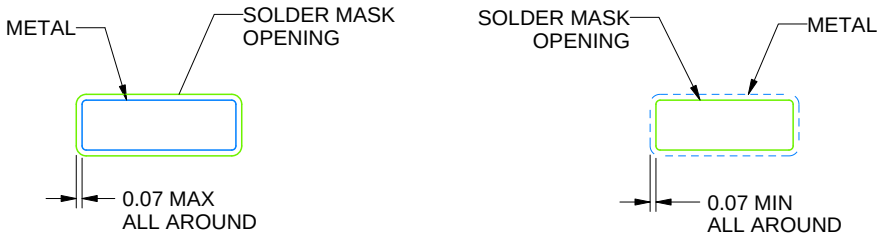

NON SOLDER MASK DEFINED

SOLDER MASK DEFINED

SOLDER MASK DETAILS

4220735/A 12/2021

NOTES: (continued)

5. Publication IPC-7351 may have alternate designs.
6. Solder mask tolerances between and around signal pads can vary based on board fabrication site.

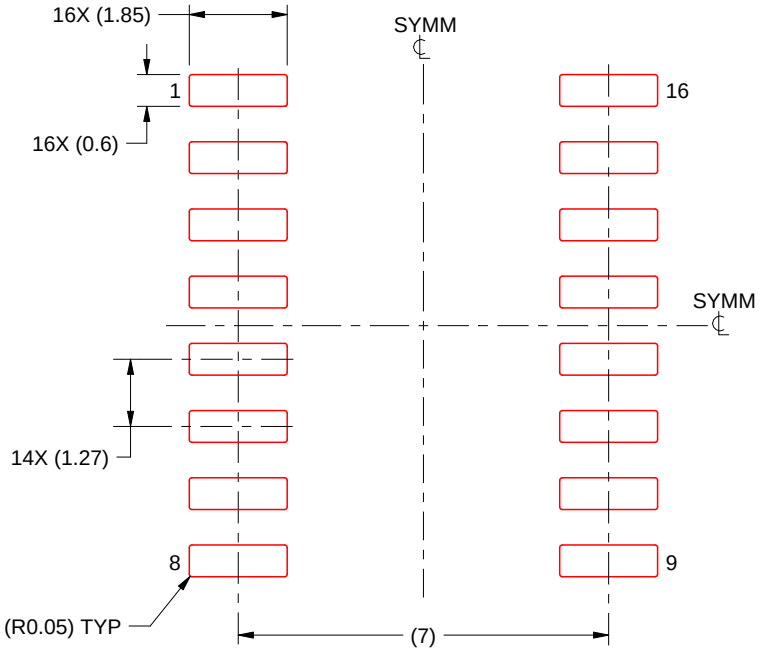

SOLDER PASTE EXAMPLE
BASED ON 0.125 mm THICK STENCIL
SCALE:7X

4220735/A 12/2021

NOTES: (continued)

7. Laser cutting apertures with trapezoidal walls and rounded corners may offer better paste release. IPC-7525 may have alternate design recommendations.
8. Board assembly site may have different recommendations for stencil design.

W (R–GDFP–F16) CERAMIC DUAL FLATPACK

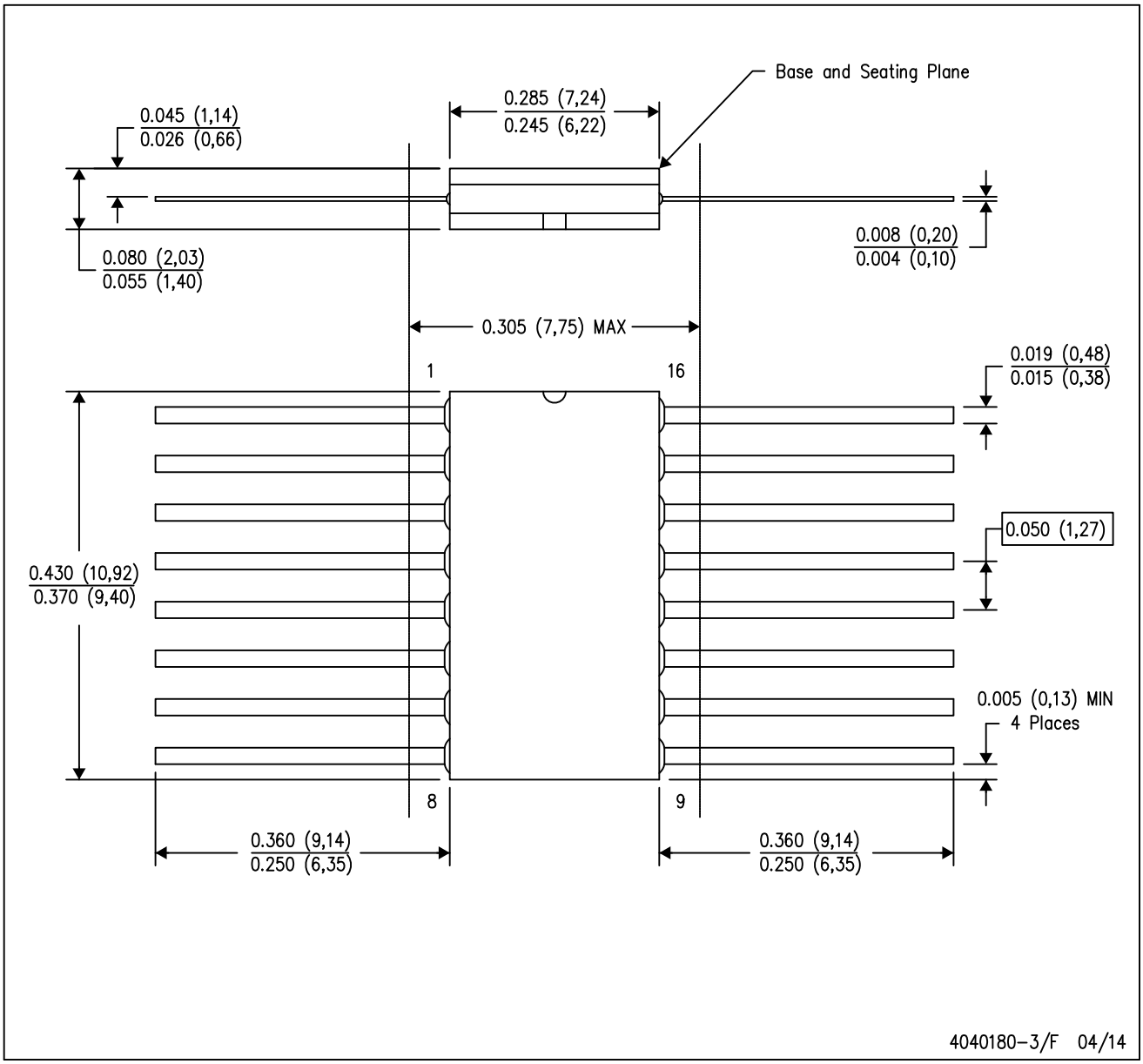

NOTES:
A. All linear dimensions are in inches (millimeters).
B. This drawing is subject to change without notice.
C. This package can be hermetically sealed with a ceramic lid using glass frit.
D. Index point is provided on cap for terminal identification only.
E. Falls within MIL STD 1835 GDFP2–F16

J (R–GDIP–T**) CERAMIC DUAL IN–LINE PACKAGE

14 LEADS SHOWN

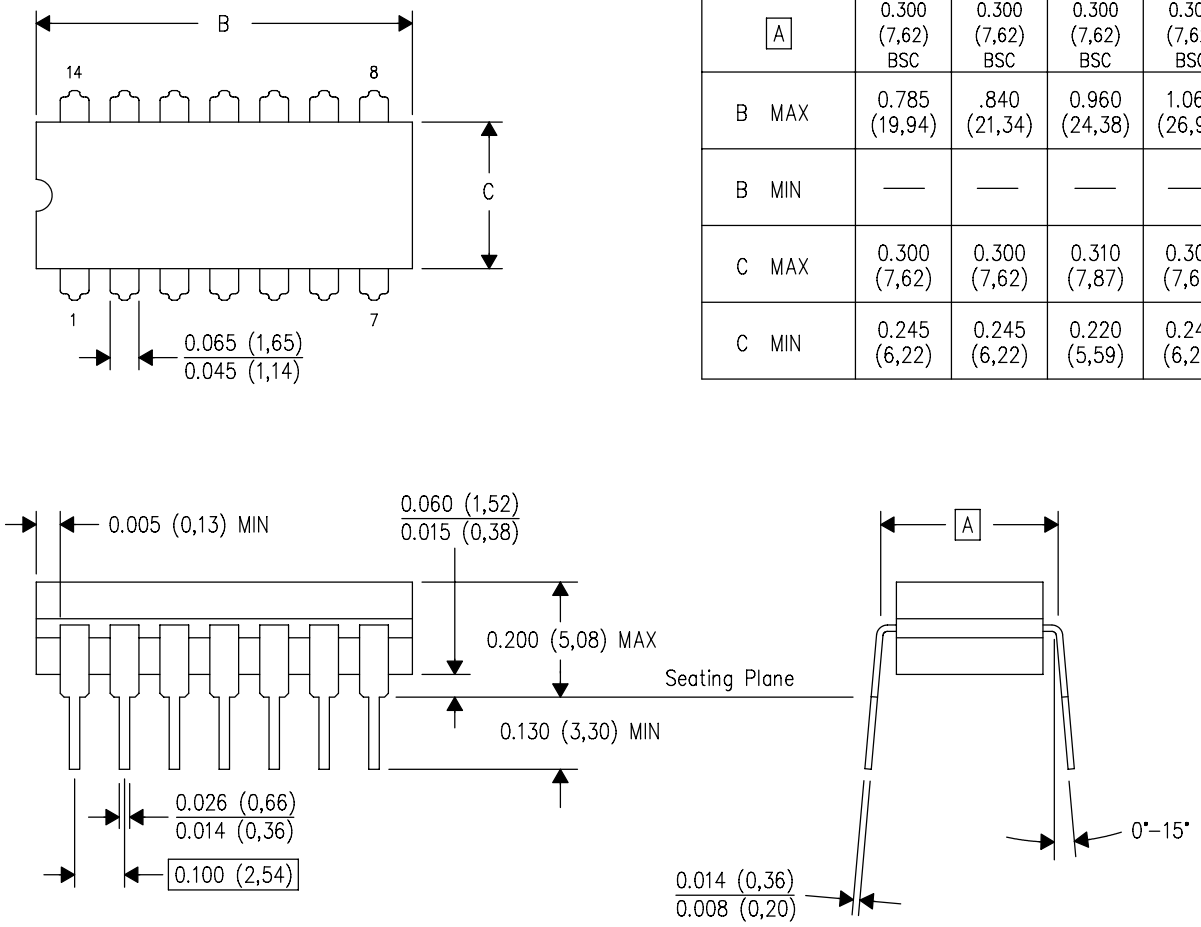

DIM \ PINS **	14	16	18	20
A	0.300 (7,62) BSC	0.300 (7,62) BSC	0.300 (7,62) BSC	0.300 (7,62) BSC
B MAX	0.785 (19,94)	.840 (21,34)	0.960 (24,38)	1.060 (26,92)
B MIN	—	—	—	—
C MAX	0.300 (7,62)	0.300 (7,62)	0.310 (7,87)	0.300 (7,62)
C MIN	0.245 (6,22)	0.245 (6,22)	0.220 (5,59)	0.245 (6,22)

4040083/F 03/03

NOTES:
- A. All linear dimensions are in inches (millimeters).
- B. This drawing is subject to change without notice.
- C. This package is hermetically sealed with a ceramic lid using glass frit.
- D. Index point is provided on cap for terminal identification only on press ceramic glass frit seal only.
- E. Falls within MIL STD 1835 GDIP1–T14, GDIP1–T16, GDIP1–T18 and GDIP1–T20.

N (R–PDIP–T**) PLASTIC DUAL–IN–LINE PACKAGE

16 PINS SHOWN

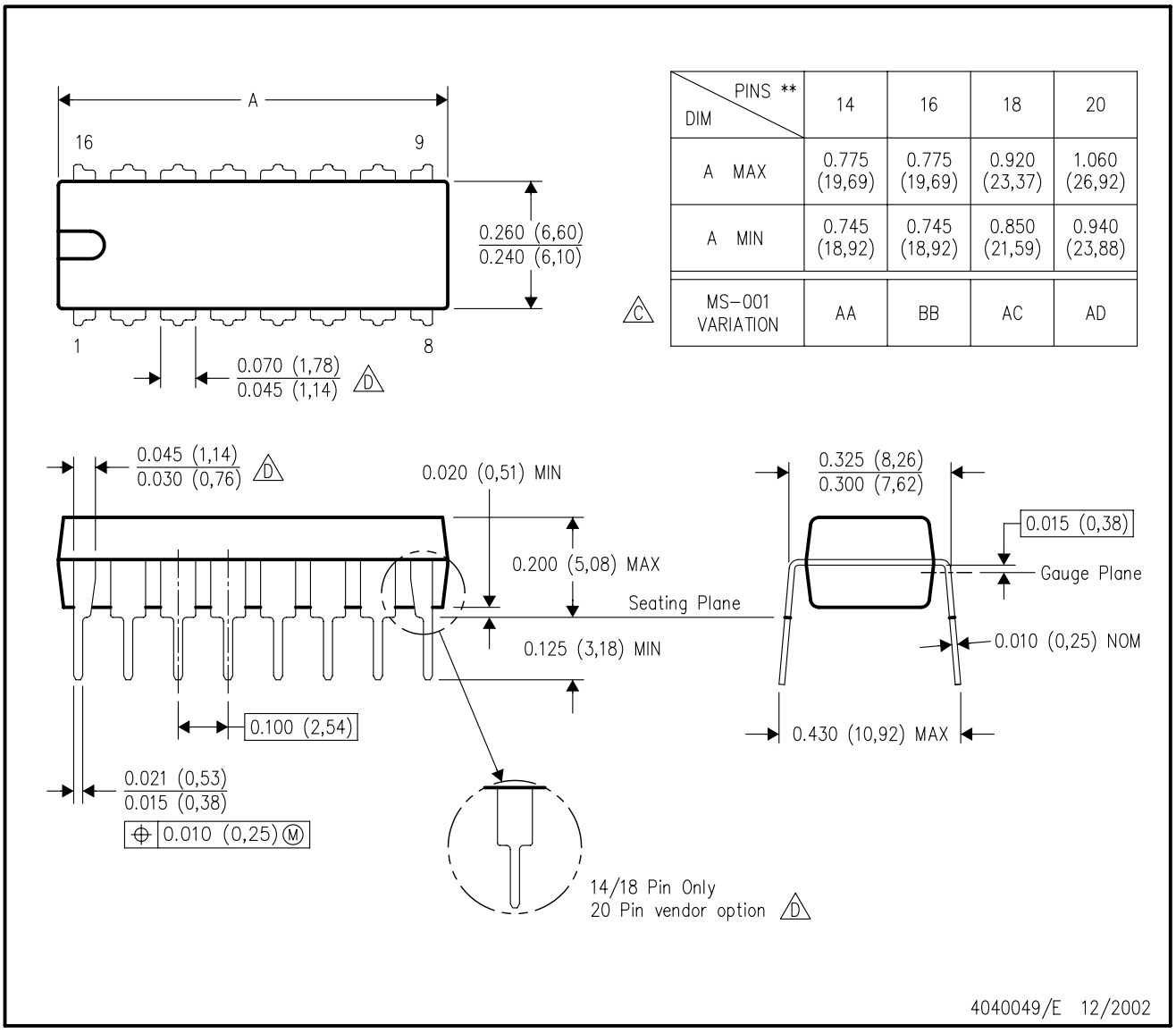

DIM \ PINS **	14	16	18	20
A MAX	0.775 (19,69)	0.775 (19,69)	0.920 (23,37)	1.060 (26,92)
A MIN	0.745 (18,92)	0.745 (18,92)	0.850 (21,59)	0.940 (23,88)
MS–001 VARIATION (C)	AA	BB	AC	AD

NOTES:
A. All linear dimensions are in inches (millimeters).
B. This drawing is subject to change without notice.
C. Falls within JEDEC MS–001, except 18 and 20 pin minimum body length (Dim A).
D. The 20 pin end lead shoulder width is a vendor option, either half or full width.

FK (S–CQCC–N**) LEADLESS CERAMIC CHIP CARRIER

28 TERMINAL SHOWN

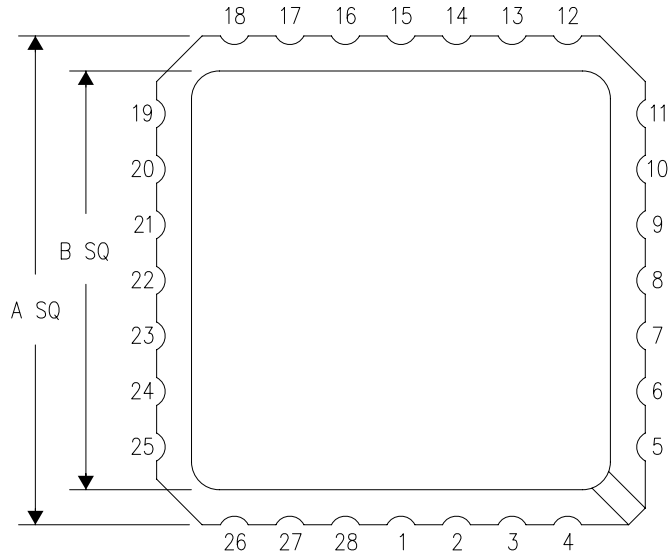

NO. OF TERMINALS **	A		B	
	MIN	MAX	MIN	MAX
20	0.342 (8,69)	0.358 (9,09)	0.307 (7,80)	0.358 (9,09)
28	0.442 (11,23)	0.458 (11,63)	0.406 (10,31)	0.458 (11,63)
44	0.640 (16,26)	0.660 (16,76)	0.495 (12,58)	0.560 (14,22)
52	0.740 (18,78)	0.761 (19,32)	0.495 (12,58)	0.560 (14,22)
68	0.938 (23,83)	0.962 (24,43)	0.850 (21,6)	0.858 (21,8)
84	1.141 (28,99)	1.165 (29,59)	1.047 (26,6)	1.063 (27,0)

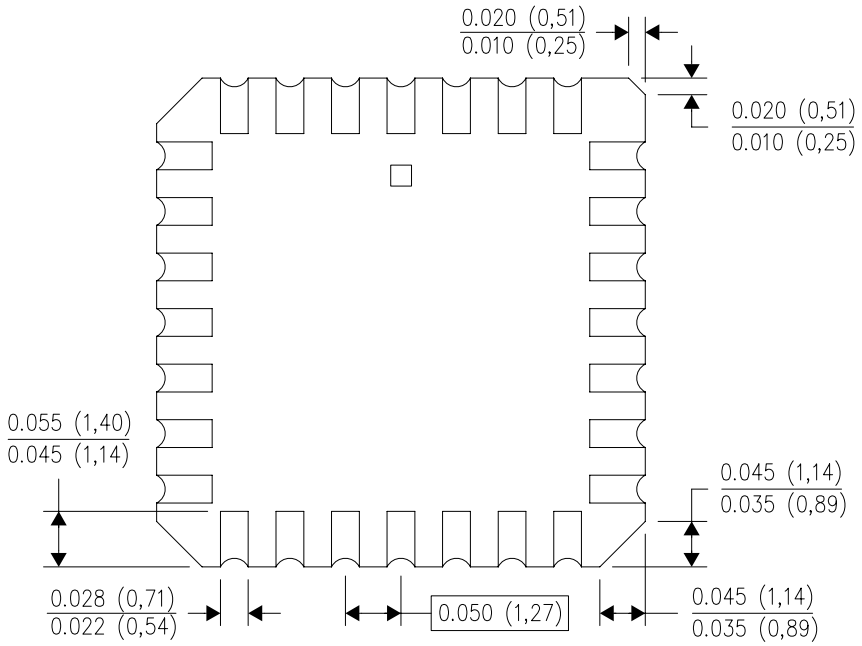

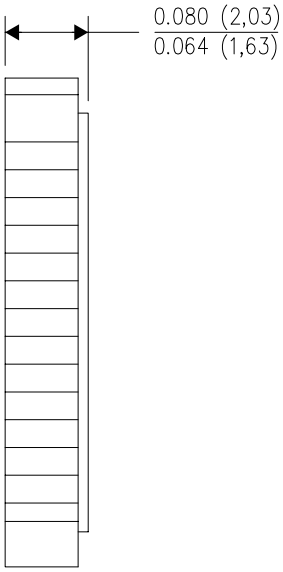

4040140/D 01/11

NOTES:
A. All linear dimensions are in inches (millimeters).
B. This drawing is subject to change without notice.
C. This package can be hermetically sealed with a metal lid.
D. Falls within JEDEC MS–004

D (R–PDSO–G16) PLASTIC SMALL OUTLINE

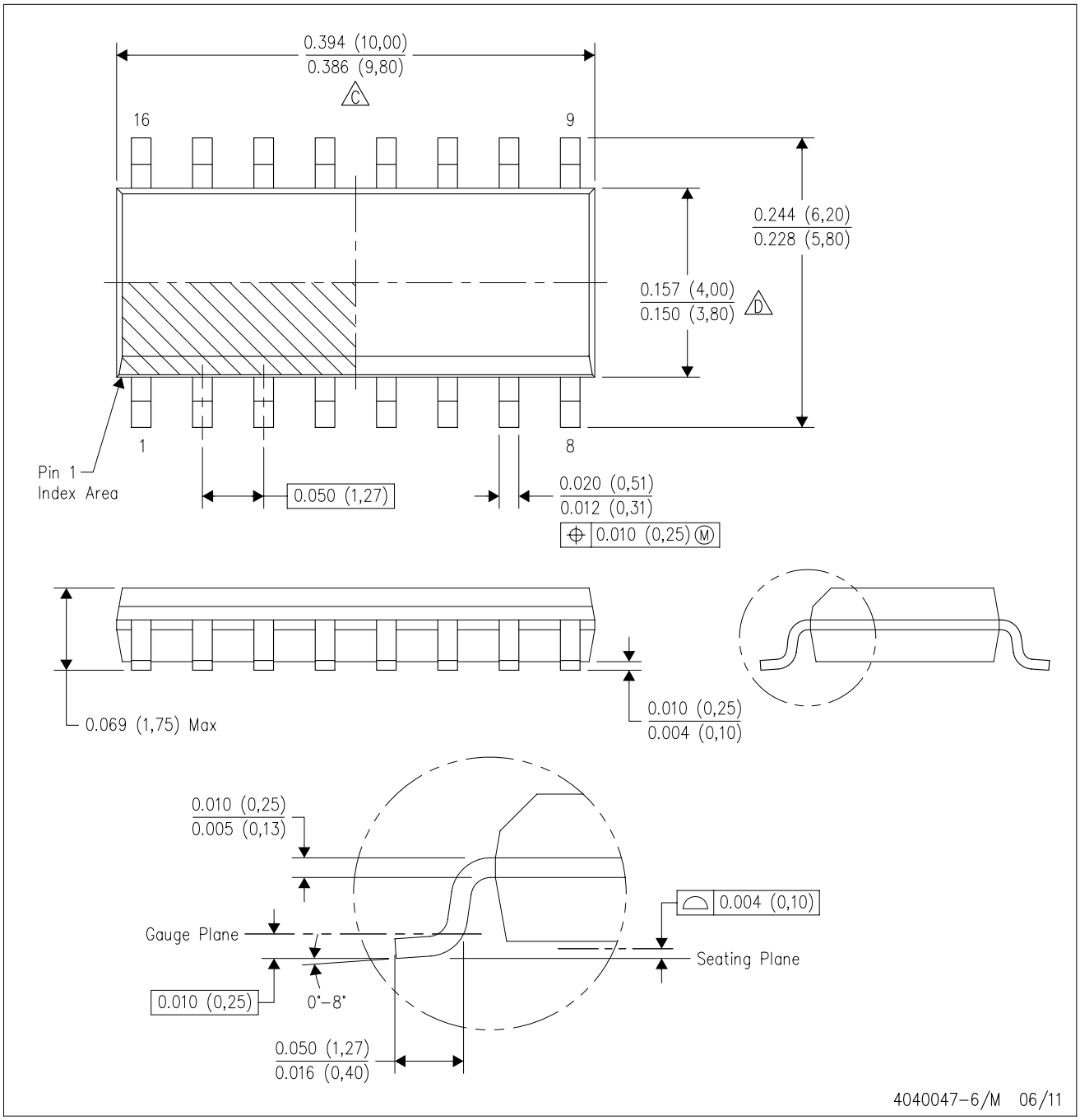

NOTES:
A. All linear dimensions are in inches (millimeters).
B. This drawing is subject to change without notice.
C. Body length does not include mold flash, protrusions, or gate burrs. Mold flash, protrusions, or gate burrs shall not exceed 0.006 (0,15) each side.
D. Body width does not include interlead flash. Interlead flash shall not exceed 0.017 (0,43) each side.
E. Reference JEDEC MS–012 variation AC.

D (R–PDSO–G16) PLASTIC SMALL OUTLINE

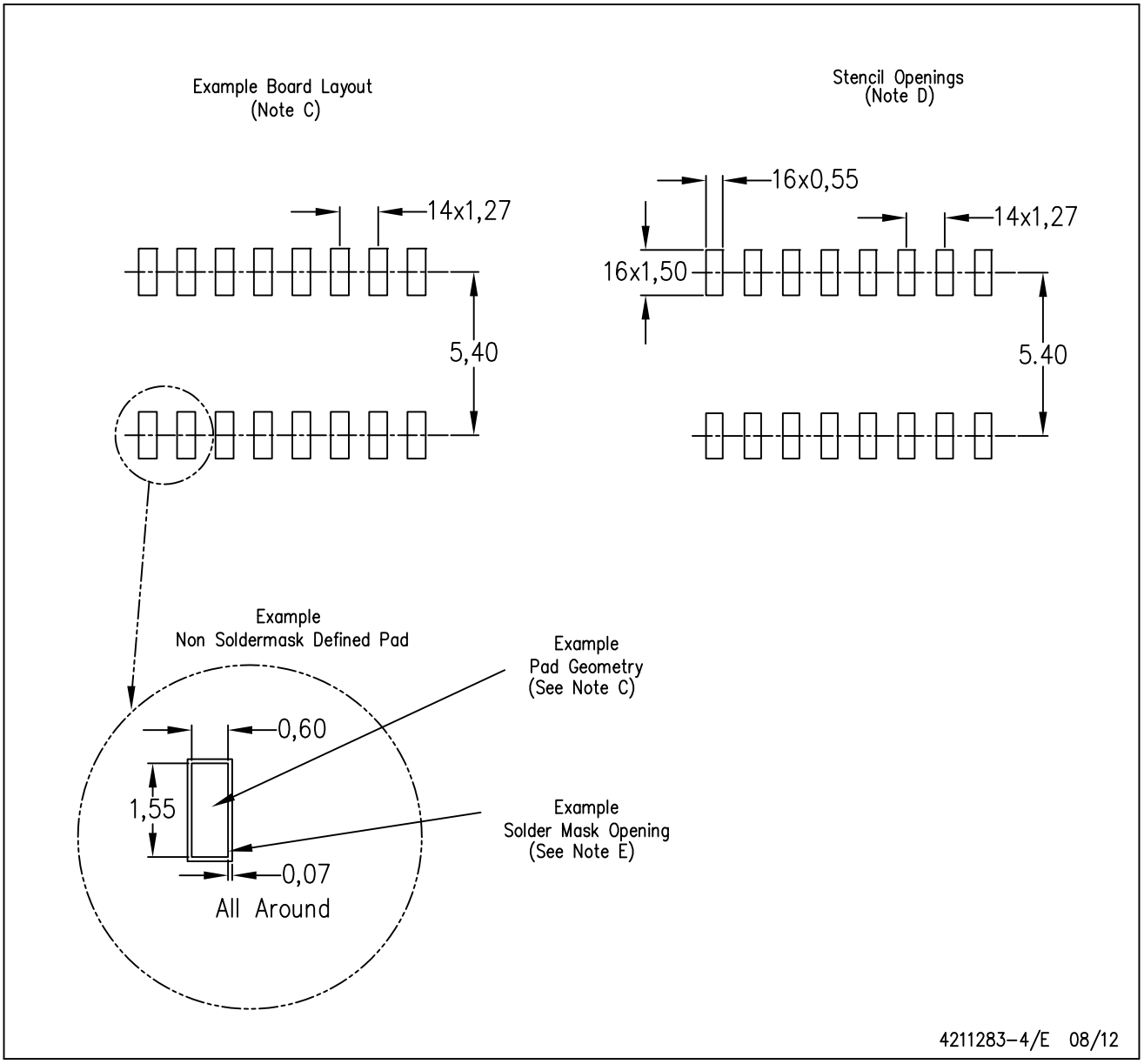

NOTES:
A. All linear dimensions are in millimeters.
B. This drawing is subject to change without notice.
C. Publication IPC–7351 is recommended for alternate designs.
D. Laser cutting apertures with trapezoidal walls and also rounding corners will offer better paste release. Customers should contact their board assembly site for stencil design recommendations. Refer to IPC–7525 for other stencil recommendations.
E. Customers should contact their board fabrication site for solder mask tolerances between and around signal pads.

MECHANICAL DATA

NS (R-PDSO-G)** **PLASTIC SMALL-OUTLINE PACKAGE**

14-PINS SHOWN

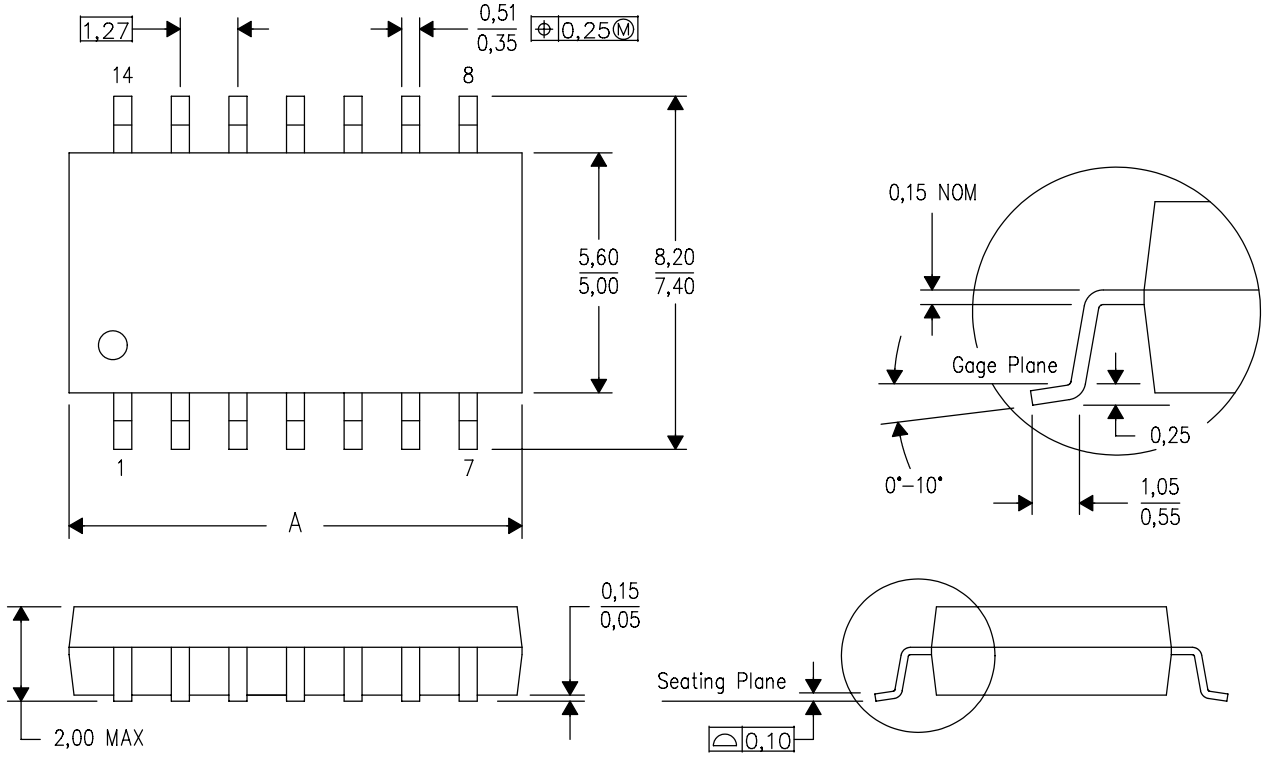

DIM \ PINS **	14	16	20	24
A MAX	10,50	10,50	12,90	15,30
A MIN	9,90	9,90	12,30	14,70

4040062/C 03/03

NOTES:
A. All linear dimensions are in millimeters.
B. This drawing is subject to change without notice.
C. Body dimensions do not include mold flash or protrusion, not to exceed 0,15.

IMPORTANT NOTICE AND DISCLAIMER

TI PROVIDES TECHNICAL AND RELIABILITY DATA (INCLUDING DATA SHEETS), DESIGN RESOURCES (INCLUDING REFERENCE DESIGNS), APPLICATION OR OTHER DESIGN ADVICE, WEB TOOLS, SAFETY INFORMATION, AND OTHER RESOURCES “AS IS” AND WITH ALL FAULTS, AND DISCLAIMS ALL WARRANTIES, EXPRESS AND IMPLIED, INCLUDING WITHOUT LIMITATION ANY IMPLIED WARRANTIES OF MERCHANTABILITY, FITNESS FOR A PARTICULAR PURPOSE OR NON-INFRINGEMENT OF THIRD PARTY INTELLECTUAL PROPERTY RIGHTS.

These resources are intended for skilled developers designing with TI products. You are solely responsible for (1) selecting the appropriate TI products for your application, (2) designing, validating and testing your application, and (3) ensuring your application meets applicable standards, and any other safety, security, regulatory or other requirements.

These resources are subject to change without notice. TI grants you permission to use these resources only for development of an application that uses the TI products described in the resource. Other reproduction and display of these resources is prohibited. No license is granted to any other TI intellectual property right or to any third party intellectual property right. TI disclaims responsibility for, and you will fully indemnify TI and its representatives against, any claims, damages, costs, losses, and liabilities arising out of your use of these resources.

TI’s products are provided subject to TI’s Terms of Sale or other applicable terms available either on ti.com or provided in conjunction with such TI products. TI’s provision of these resources does not expand or otherwise alter TI’s applicable warranties or warranty disclaimers for TI products.

TI objects to and rejects any additional or different terms you may have proposed.

Mailing Address: Texas Instruments, Post Office Box 655303, Dallas, Texas 75265
Copyright © 2022, Texas Instruments Incorporated