MSP430F677x1A、MSP430F676x1A、MSP430F674x1A 多相仪表计量片上系统 (SoC)

1 器件概述

1.1 特性

- 相位电流在超过 2000:1 的动态范围内精度 < 0.1%
- 符合或者超过美国国家标准学会 (ANSI) C12.20 和国际电工委员会 (IEC) 62053 标准
- 支持诸如电流变压器、罗式线圈或分流器等多种传感器
- 针对高达 3 相位加上中线相位的电源管理
- 为校准提供有源能量和无功能量的专用脉冲输出引脚
- 每相位或累加相位的四象限测量
- 精确的相位角测量
- 针对电流变压器的数字相位校正
- 温度补偿电能测量
- 使用单一校准的 40Hz 至 70Hz 线路频率范围
- 支持自动切换的灵活电源选项
- AC 主电源故障期间，显示运行在极低功耗下：LMP3 时 为 3μA
- 具有高达 320 段对比度控制的 LCD 驱动器
- 具有篡改检测、晶振偏移校准和温度补偿功能的受密码保护的实时时钟 (RTC)
- 集成安全模块以支持防篡改
- 用于智能仪表实施的多个通信接口
- 高性能模拟
  - 多达 7 个支持差分输入和可变增益的独立 24 位 Σ-Δ ADC
  - 具有 6 个外部通道和 2 个内部通道的 10 位 200ksps SAR ADC，包括电源和温度传感器测量
- 高集成度数字
  - 3 通道直接存储器存取 (DMA) 控制器
  - 16 位循环冗余校验 (CRC) 模块
  - 4 个 16 位计时器，共有 9 个捕捉/比较寄存器
- 6 个增强型通用串行通信接口 (eUSCI)
  - eUSCI_A0、eUSCI_A1、eUSCI_A2 和 eUSCI_A3 支持 UART、IrDA 和 SPI
  - eUSCI_B0、eUSCI_B1 支持 SPI 和 I^2C
- 超低功耗
  - 多个低功耗模式
    - 待机模式 (LPM3)：3V 时为 2.1μA，在不到 5μs 的时间内唤醒
    - RTC 模式 (LPM3.5)：3V 时为 0.34μA
    - 关断模式 (LPM4.5)：3V 时为 0.18μA
- CPU
  - 具有 32 位复用器的高性能 25MHz CPU
  - 宽输入电源电压范围：3.6V 到低至 1.8V
- 存储器
  - 高达 512KB 的单周期闪存
  - 高达 32KB 支持单周期访问的 RAM
- 封装选项
  - 具有 90 个 I/O 引脚的 128 引脚薄型方形扁平 (LQFP)(PEU) 封装
  - 具有 62 个 I/O 引脚的 100 引脚 LQFP (PZ) 封装
- 开发工具（另请参阅 工具与软件）
  - 适用于具有 24 位 Σ-Δ ADC 的 MSP430 MCU 的电能测量设计中心 (MSP-EM-DESIGN-CENTER)
  - 用于计量的三相电子电表 (EVM430-F6779)
  - 目标开发板 (MSP-TS430PEU128)

1.2 应用

- 三相电子电表
- 公用事业仪表计量
- 能量监控

本文档旨在为方便起见，提供有关 TI 产品中文版本的信息，以确认产品的概要。 有关适用的官方英文版本的最新信息，请访问 www.ti.com，其内容始终优先。 TI 不保证翻译的准确性和有效性。 在实际设计之前，请务必参考最新版本的英文版本。

1.3 说明

MSP430F67xx1A 多相位计量 SoC 是功能强大的高度集成解决方案，这些解决方案使用很少的外部组件即可提供高精度计量并实现低系统成本。MSP430F67xx1A 微控制器 (MCU) 系列是 MSP430™计量和监测 MCU 产品系列的一部分，该产品系列专用于电能测量和功率监控 应用 （包括智能电网和楼宇自动化）。

MSP430F67xx1A MCU具有多达 7 个独立的 24 位 Σ-Δ ADC，可提供优于 0.1% 的精度。MSP430F67xx1A 器件集成了高性能 MSP430 CPU 和 32 位乘法器，可执行所有计量计算。系列产品成员包括高达 512KB 的闪存、32KB 的 RAM 以及一个最高支持 320 段的 LCD 控制器。

MSP430F67xx1A 具有超低功耗，可以最大程度地减小系统电源，从而降低总成本。低待机功率需要最低的电能存储，并且能够在主电源发生故障时更长时间地保留关键数据。

MSP430F67xx1A MCU 系列由广泛的软件和硬件生态系统提供支持。德州仪器 (TI) 电能测量设计中心 (EMDC) 可以通过快速配置电能测量软件库、自动生成代码、执行校准和查看结果来简化开发并加快设计。MSP430F67xx1A MCU 执行电能测量软件库，该软件库计算所有相关电能和功率结果。开发套件包括 EVM430-F6779 三相电表评估板和 MSP-TS430PEU128 128 引脚目标开发板。还提供工业标准开发工具与软件平台，以在全球范围内加快符合所有 ANSI 和 IEC 标准的仪表的开发。

有关完整的模块说明，请参阅*《MSP430F5xx 和 MSP430F6xx 系列用户指南》*

器件信息(1)

器件型号	封装	封装尺寸(2)
MSP430F67791AIPEU	LQFP (128)	20mm × 14mm
MSP430F67791AIPZ	LQFP (100)	14mm x 14mm

(1) 要获得最新的产品、封装和订购信息，请参见*封装选项附录*（节 9），或者访问德州仪器 (TI) 网站 www.ti.com.cn。
(2) 此处显示的尺寸为近似值。要获得包含误差值的封装尺寸，请参见*机械数据*（节 9）。

版权 © 2014–2018, Texas Instruments Incorporated

1.4 应用图

图 1-1 显示了典型应用图。

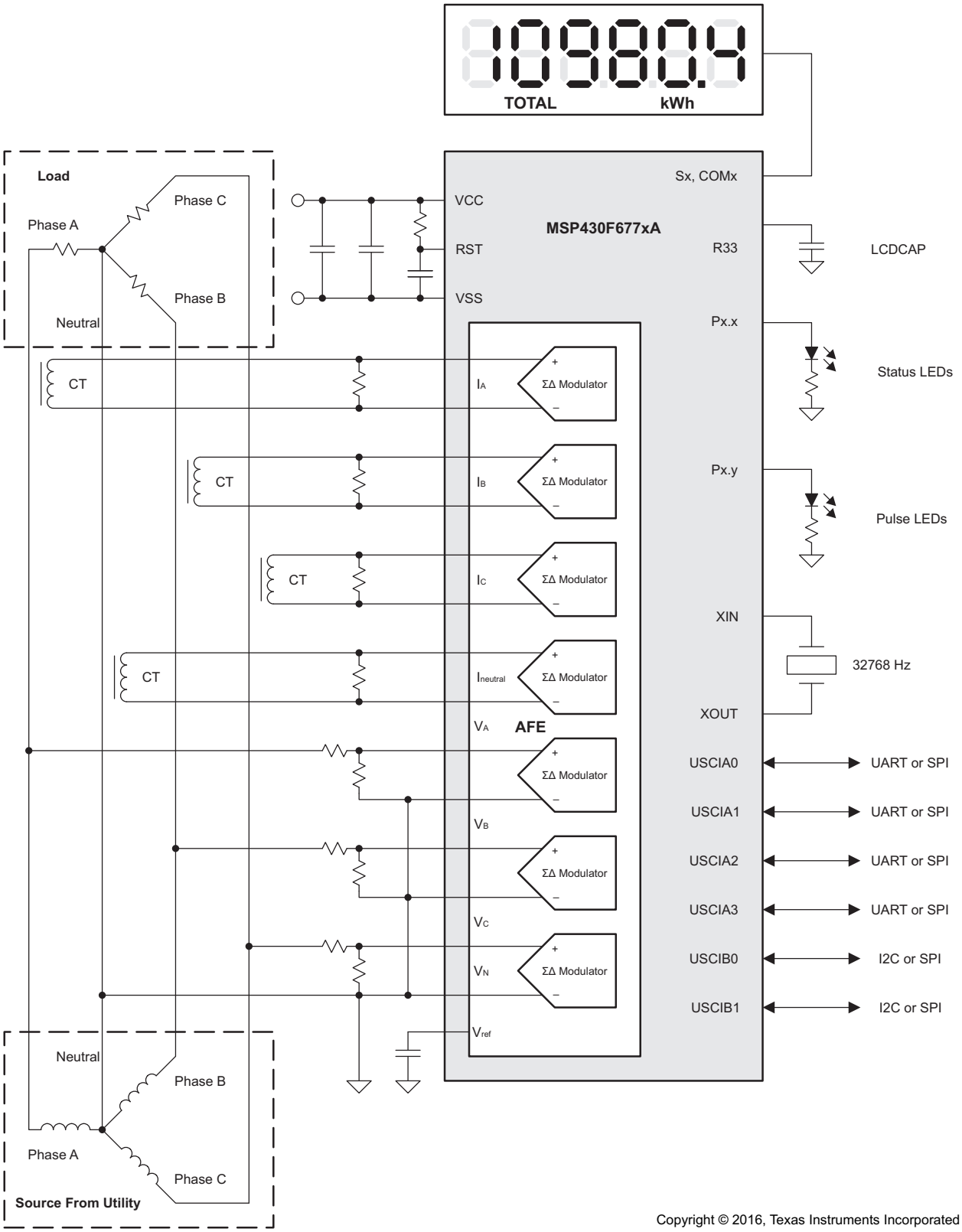

图 **1-1.** 使用 **MSP430F677x1A** 的 **3** 相 **4** 线制星形连接

内容

1 器件概述 1
1.1 特性 1
1.2 应用 1
1.3 说明 2
1.4 应用图 3
2 修订历史记录 5
3 Device Comparison 6
3.1 Related Products 7
4 Terminal Configuration and Functions 8
4.1 Pin Diagrams 8
4.2 Signal Descriptions 12
4.3 Pin Multiplexing 25
4.4 Connection of Unused Pins 25
5 Specifications 26
5.1 Absolute Maximum Ratings 26
5.2 ESD Ratings 26
5.3 Recommended Operating Conditions 26
5.4 Active Mode Supply Current Into V_{CC} Excluding External Current 28
5.5 Low-Power Mode Supply Currents (Into V_{CC}) Excluding External Current 29
5.6 Low-Power Mode With LCD Supply Currents (Into V_{CC}) Excluding External Current 30
5.7 Thermal Resistance Characteristics 31
5.8 Timing and Switching Characteristics 32
5.9 Digital I/Os 36
5.10 Power-Management Module (PMM) 40
5.11 Auxiliary Supplies 42
5.12 Timer_A 45
5.13 eUSCI 45
5.14 RTC Tamper Detect Pin 51
5.15 LCD_C 52
5.16 SD24_B 54
5.17 ADC10_A 60
5.18 REF 62
5.19 Comparator_B 63
5.20 Flash 64
5.21 Emulation and Debug 64
6 Detailed Description 65
6.1 Overview 65
6.2 Functional Block Diagrams 66
6.3 CPU (Link to User's Guide) 67
6.4 Instruction Set 68
6.5 Operating Modes 69
6.6 Interrupt Vector Addresses 70
6.7 Special Function Registers (SFRs) 71
6.8 Bootloader (BSL) 72
6.9 JTAG Operation 73
6.10 Memory 74
6.11 Peripherals 77
6.12 Input/Output Diagrams 103
6.13 Device Descriptors (TLV) 158
6.14 Identification 161
7 Applications, Implementation, and Layout 162
8 器件和文档支持 163
8.1 入门和后续步骤 163
8.2 Device Nomenclature 163
8.3 工具与软件 165
8.4 文档支持 167
8.5 相关链接 169
8.6 社区资源 169
8.7 商标 169
8.8 静电放电警告 169
8.9 Glossary 169
9 机械、封装和可订购信息 170

版权 © 2014–2018, Texas Instruments Incorporated

2 修订历史记录

Changes from May 29, 2014 to September 28, 2018 **Page**

- 更新了节 1.1特性 1
- 更新了节 1.3说明 2
- Added Section 3.1, *Related Products* 7
- Corrected the port number (P4.2) on pin 61 in Figure 4-2, *100-Pin PZ Package (Top View)* 10
- Added note to P1.3/ADC10CLK/A3 (pin 8) in Table 4-3, *Terminal Functions – PEU Package* 12
- Added typical conditions statements at the beginning of Section 5, *Specifications* 26
- Added SD24_B input pins and AUXVCCx pins to exception list on "Voltage applied to pins" parameter, and added SD24_B input pin limits in "Diode current at pins" parameter in Section 5.1, *Absolute Maximum Ratings* 26
- Added Section 5.2, *ESD Ratings* 26
- Added Section 5.7, *Thermal Resistance Characteristics* 31
- Updated notes (1) and (2) and added note (3) in Table 5-1, *Wake-up Times From Low-Power Modes and Reset* 32
- Changed the TYP value of the $C_{L,eff}$ parameter with Test Conditions of "XTS = 0, XCAPx = 0" from 2 pF to 1 pF in Table 5-2, *Crystal Oscillator, XT1, Low-Frequency Mode* 33
- Corrected bit name in Test Conditions of R_{CHARGE} parameter (changed CHCx to AUXCHCx) in Table 5-25, *Auxiliary Supplies, Charge Limiting Resistor* 44
- Replaced f_{Frame} parameter with f_{LCD}, $f_{FRAME,4mux}$, and $f_{FRAME,8mux}$ parameters in Table 5-37, *LCD_C, Operating Conditions* 52
- On the $V_{ID,FS}$ parameter in Table 5-39, *SD24_B Power Supply and Recommended Operating Conditions*: Changed the MIN value from "V_{REF}/GAIN" to "–V_{REF}/GAIN"; Removed "Unipolar mode" test condition (mode is not supported) 54
- Removed ADC10DIV from the formula for the TYP value in the second row of the $t_{CONVERT}$ parameter in Table 5-48, *10-Bit ADC, Switching Characteristics*, because ADC10CLK is after division 60
- Changed Test Conditions for all parameters in Table 5-49, *10-Bit ADC Linearity Parameters*: Removed "V_{REF-}"; Changed from "(V_{eREF+} – V_{eREF-})min ≤ (V_{eREF+} – V_{eREF-})" to "1.4 V ≤ (V_{eREF+} – V_{eREF-})"; Changed from "C_{VREF+} = 20 pF" to "C_{VeREF+} = 20 pF"; Added "C_{VeREF+} = 20 pF" to E_I; Added "ADC10SREFx = 11b" to E_T and E_G 61
- Changed from "V_{REF-}/V_{eREF-}" to "V_{eREF-}" in Test Conditions for V_{eREF+}, V_{eREF-}, and (V_{eREF+} – V_{eREF-}) parameters in Table 5-50, *10-Bit ADC, External Reference* 61
- Changed the MIN value of $A_{VCC(min)}$ with Test Conditions of "REFVSEL = {0} for 1.5 V" from 2.2 V to 1.8 V in Table 5-51, *REF Built-In Reference* 62
- Changed the MAX value of the t_{EN_CMP} parameter with Test Conditions of "CBPWRMD = 10" from 50 µs to 100 µs in Table 5-52, *Comparator_B* 63
- Corrected the name of the RTC module (changed from RTC_CE to RTC_C) in Figure 6-1, *Functional Block Diagram – PEU Package* 66
- Corrected the name of the RTC module (changed from RTC_CE to RTC_C) in Figure 6-2, *Functional Block Diagram – PZ Package* 66
- Throughout document, changed all instances of "bootstrap loader" to "bootloader" 72
- Corrected spelling of NMIIFG in Table 6-13, *System Module Interrupt Vector Registers* 80
- Deleted mention of counter mode in Section 6.11.21, *Real-Time Clock (RTC_C)* (feature is not supported in this device) 85
- 已将先前的"*开发工具支持*"部分替换为"节 8.3、*工具与软件*" 165
- 更改了格式并在节 8.4文档支持 中添加了内容 167

3 Device Comparison

Table 3-1 summarizes the available family members.

Table 3-1. Device Comparison(1)(2)

DEVICE	FLASH (KB)	SRAM (KB)	SD24_B CONVERTERS	ADC10_A CHANNELS	Timer_A(3)	eUSCI		I/Os	PACKAGE
						CHANNEL A: UART, IrDA, SPI	CHANNEL B: SPI, I²C		
MSP430F67791AIPEU	512	32	7	6 ext, 2 int	3, 2, 2, 2	4	2	90	128 PEU
MSP430F67781AIPEU	512	16	7	6 ext, 2 int	3, 2, 2, 2	4	2	90	128 PEU
MSP430F67771AIPEU	256	32	7	6 ext, 2 int	3, 2, 2, 2	4	2	90	128 PEU
MSP430F67761AIPEU	256	16	7	6 ext, 2 int	3, 2, 2, 2	4	2	90	128 PEU
MSP430F67751AIPEU	128	16	7	6 ext, 2 int	3, 2, 2, 2	4	2	90	128 PEU
MSP430F67691AIPEU	512	32	6	6 ext, 2 int	3, 2, 2, 2	4	2	90	128 PEU
MSP430F67681AIPEU	512	16	6	6 ext, 2 int	3, 2, 2, 2	4	2	90	128 PEU
MSP430F67671AIPEU	256	32	6	6 ext, 2 int	3, 2, 2, 2	4	2	90	128 PEU
MSP430F67661AIPEU	256	16	6	6 ext, 2 int	3, 2, 2, 2	4	2	90	128 PEU
MSP430F67651AIPEU	128	16	6	6 ext, 2 int	3, 2, 2, 2	4	2	90	128 PEU
MSP430F67491AIPEU	512	32	4	6 ext, 2 int	3, 2, 2, 2	4	2	90	128 PEU
MSP430F67481AIPEU	512	16	4	6 ext, 2 int	3, 2, 2, 2	4	2	90	128 PEU
MSP430F67471AIPEU	256	32	4	6 ext, 2 int	3, 2, 2, 2	4	2	90	128 PEU
MSP430F67461AIPEU	256	16	4	6 ext, 2 int	3, 2, 2, 2	4	2	90	128 PEU
MSP430F67451AIPEU	128	16	4	6 ext, 2 int	3, 2, 2, 2	4	2	90	128 PEU
MSP430F67791AIPZ	512	32	7	6 ext, 2 int	3, 2, 2, 2	4	2	62	100 PZ
MSP430F67781AIPZ	512	16	7	6 ext, 2 int	3, 2, 2, 2	4	2	62	100 PZ
MSP430F67771AIPZ	256	32	7	6 ext, 2 int	3, 2, 2, 2	4	2	62	100 PZ
MSP430F67761AIPZ	256	16	7	6 ext, 2 int	3, 2, 2, 2	4	2	62	100 PZ
MSP430F67751AIPZ	128	16	7	6 ext, 2 int	3, 2, 2, 2	4	2	62	100 PZ
MSP430F67691AIPZ	512	32	6	6 ext, 2 int	3, 2, 2, 2	4	2	62	100 PZ
MSP430F67681AIPZ	512	16	6	6 ext, 2 int	3, 2, 2, 2	4	2	62	100 PZ
MSP430F67671AIPZ	256	32	6	6 ext, 2 int	3, 2, 2, 2	4	2	62	100 PZ
MSP430F67661AIPZ	256	16	6	6 ext, 2 int	3, 2, 2, 2	4	2	62	100 PZ
MSP430F67651AIPZ	128	16	6	6 ext, 2 int	3, 2, 2, 2	4	2	62	100 PZ
MSP430F67491AIPZ	512	32	4	6 ext, 2 int	3, 2, 2, 2	4	2	62	100 PZ
MSP430F67481AIPZ	512	16	4	6 ext, 2 int	3, 2, 2, 2	4	2	62	100 PZ
MSP430F67471AIPZ	256	32	4	6 ext, 2 int	3, 2, 2, 2	4	2	62	100 PZ
MSP430F67461AIPZ	256	16	4	6 ext, 2 int	3, 2, 2, 2	4	2	62	100 PZ
MSP430F67451AIPZ	128	16	4	6 ext, 2 int	3, 2, 2, 2	4	2	62	100 PZ

(1) For the most current package and ordering information, see the *Package Option Addendum* in 节 9, or see the TI website at www.ti.com.
(2) Package drawings, thermal data, and symbolization are available at www.ti.com/packaging.
(3) Each number in the sequence represents an instantiation of Timer_A with its associated number of capture/compare registers and PWM output generators available. For example, a number sequence of 3, 5 would represent two instantiations of Timer_A, the first instantiation having 3 and the second instantiation having 5 capture/compare registers and PWM output generators, respectively.

Copyright © 2014–2018, Texas Instruments Incorporated

3.1 Related Products

For information about other devices in this family of products or related products, see the following links.

Products for TI Microcontrollers TI's low-power and high-performance MCUs, with wired and wireless connectivity options, are optimized for a broad range of applications.

Products for MSP430 Ultra-Low-Power Microcontrollers One platform. One ecosystem. Endless possibilities. Enabling the connected world with innovations in ultra-low-power microcontrollers with advanced peripherals for precise sensing and measurement.

Companion Products for MSP430F67791A Review products that are frequently purchased or used with this product.

Reference Designs for MSP430F67791A The TI Designs Reference Design Library is a robust reference design library that spans analog, embedded processor, and connectivity. Created by TI experts to help you jump start your system design, all TI Designs include schematic or block diagrams, BOMs, and design files to speed your time to market.

4 Terminal Configuration and Functions

4.1 Pin Diagrams

Figure 4-1 shows the pinout for the 128-pin PEU package. Table 4-1 summarizes the differences in the pinout among the device variants.

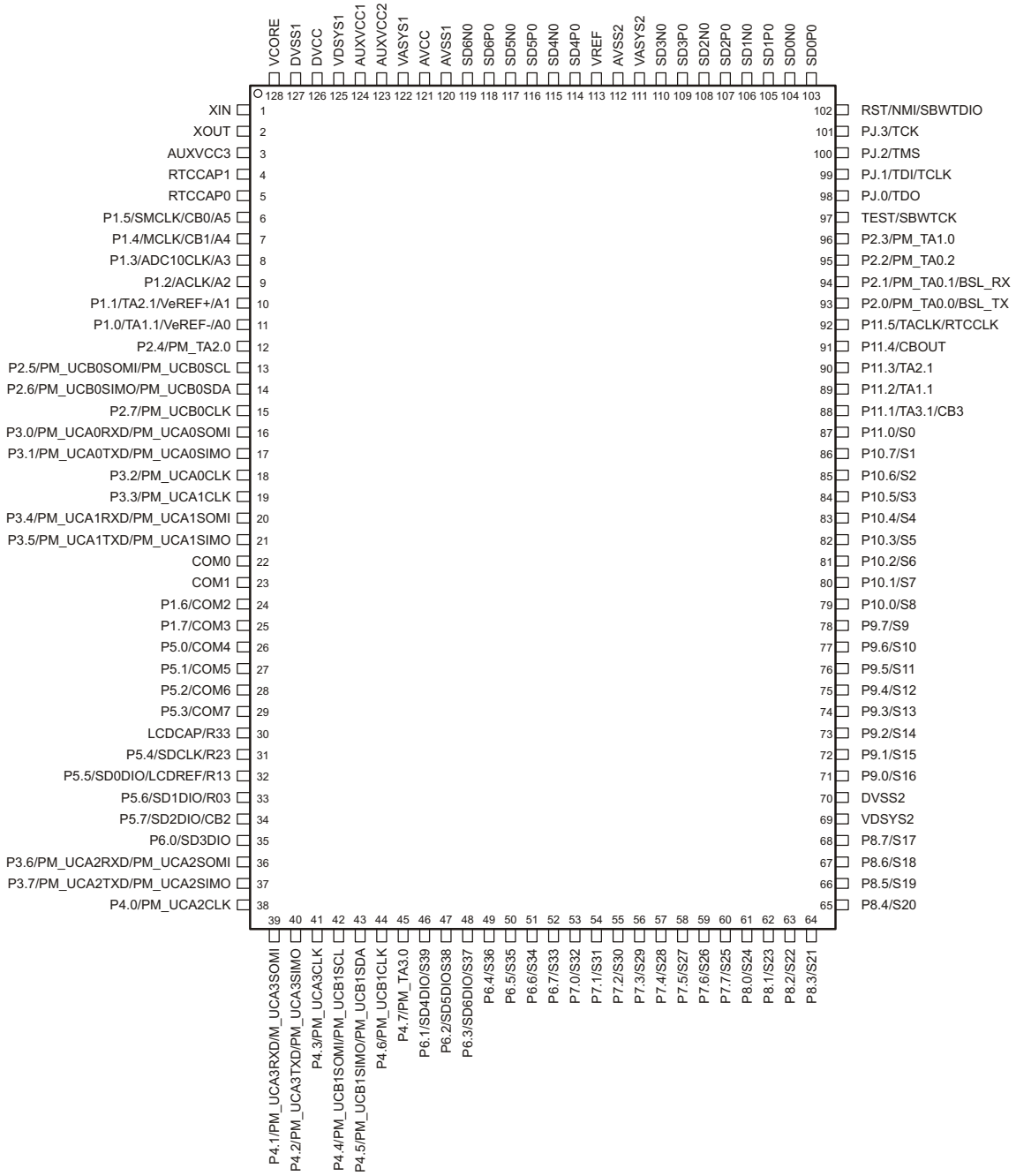

A. The secondary digital functions on Ports P2, P3, and P4 are fully mappable. This pinout shows only the default mapping. See Section 6.11.6 for details.

B. The pair of pins VDSYS1 and VDSYS2, VASYS1 and VASYS2 must be connected externally on board for proper device operation.

C. **CAUTION:** The LCDCAP/R33 pin must be connected to DVSS if it is not used.

Figure 4-1. 128-Pin PEU Package (Top View)

Copyright © 2014–2018, Texas Instruments Incorporated

Table 4-1. Pinout Differences for PEU Package, F677x1A, F676x1A, and F674x1A

PIN NUMBER	PIN NAME		
	MSP430F677x1AIPEU	MSP430F676x1AIPEU	MSP430F674x1AIPEU
46	P6.1/SD4DIO/S39	P6.1/SD4DIO/S39	P6.1/S39
47	P6.2/SD5DIO/S38	P6.2/SD5DIO/S38	P6.2/S38
48	P6.3/SD6DIO/S37	P6.3/S37	P6.3/S37
113	VREF	VREF	VREF
114	SD4P0	SD4P0	NC
115	SD4N0	SD4N0	NC
116	SD5P0	SD5P0	NC
117	SD5N0	SD5NO	NC
118	SD6P0	NC	NC
119	SD6N0	NC	NC

Figure 4-2 shows the pinout for the 100-pin PZ package. Table 4-2 summarizes the differences in the pinout among the device variants.

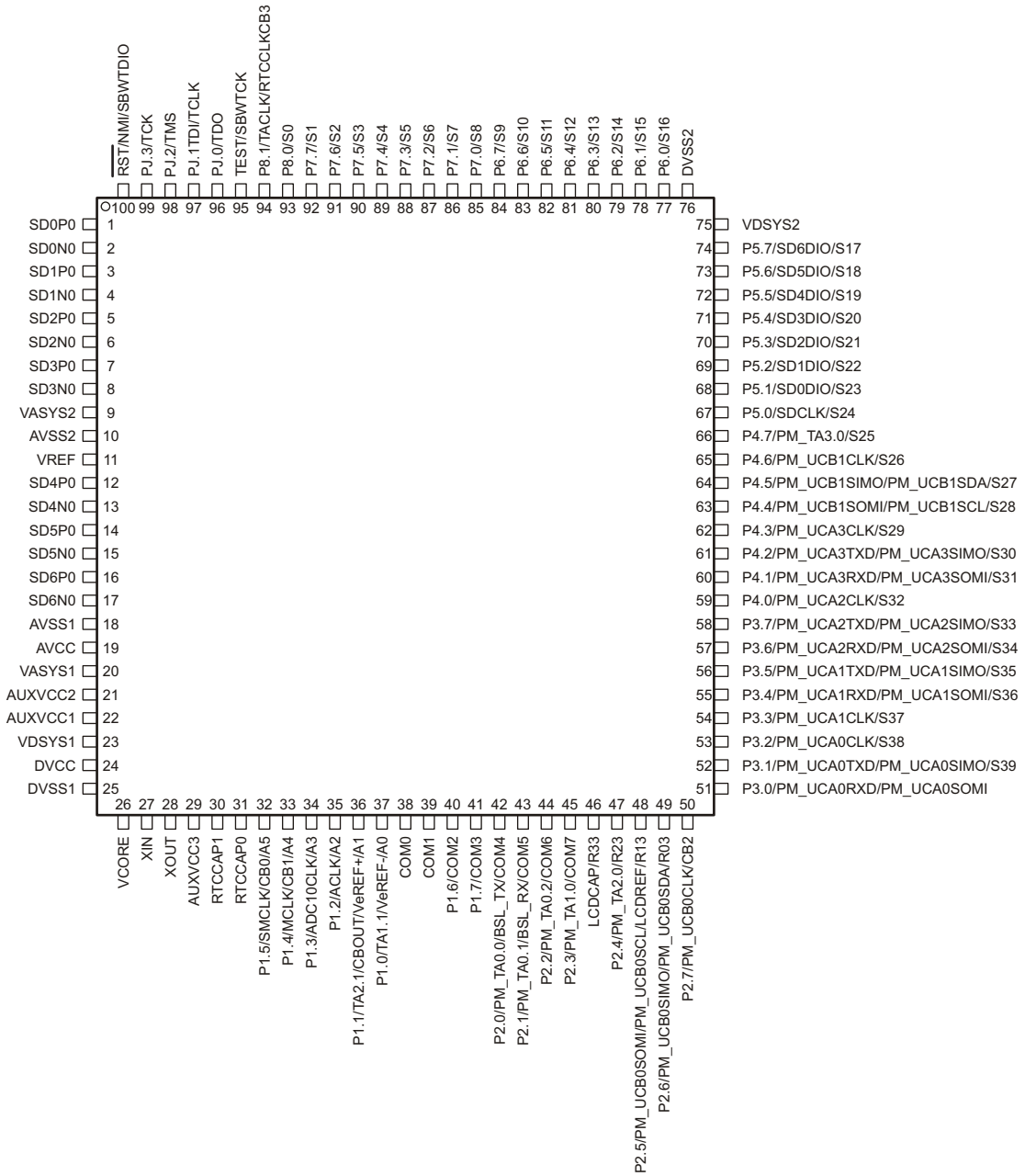

A. The secondary digital functions on Ports P2, P3, and P4 are fully mappable. This pinout shows only the default mapping. See Section 6.11.6 for details.

B. The pair of pins VDSYS1 and VDSYS2, VASYS1 and VASYS2 must be connected externally on board for proper device operation.

C. **CAUTION:** The LCDCAP/R33 pin must be connected to DVSS if it is not used.

Figure 4-2. 100-Pin PZ Package (Top View)

Copyright © 2014–2018, Texas Instruments Incorporated

Table 4-2. Pinout Differences for PZ Package, F677x1A, F676x1A, and F674x1A

PIN NUMBER	PIN NAME		
	MSP430F677x1AIPZ	MSP430F676x1AIPZ	MSP430F674x1AIPZ
11	VREF	VREF	VREF
12	SD4P0	SD4P0	NC
13	SD4N0	SD4N0	NC
14	SD5P0	SD5P0	NC
15	SD5N0	SD5NO	NC
16	SD6P0	NC	NC
17	SD6N0	NC	NC
72	P5.5/SD4DIO/S19	P5.5/SD4DIO/S19	P5.5/S19
73	P5.6/SD5DIO/S18	P5.6/SD5DIO/S18	P5.6/S18
74	P5.7/SD6DIO/S17	P5.7/S17	P5.7/S17

4.2 Signal Descriptions

Table 4-3 describes the signals for devices in the PEU package. See Table 4-4 for the signals in the PZ package.

Table 4-3. Terminal Functions – PEU Package

TERMINAL		I/O(1)	DESCRIPTION
NAME	NO. PEU		
XIN	1	I/O	Input terminal for crystal oscillator
XOUT	2	I/O	Output terminal for crystal oscillator
AUXVCC3	3		Auxiliary power supply AUXVCC3 for backup subsystem
RTCCAP1	4	I	External time capture pin 1 for RTC_C
RTCCAP0	5	I	External time capture pin 0 for RTC_C
P1.5/SMCLK/CB0/A5	6	I/O	General-purpose digital I/O with port interrupt SMCLK clock output Comparator_B input CB0 Analog input A5 for 10-bit ADC
P1.4/MCLK/CB1/A4	7	I/O	General-purpose digital I/O with port interrupt MCLK clock output Comparator_B input CB1 Analog input A4 for 10-bit ADC
P1.3/ADC10CLK/A3(2)	8	I/O	General-purpose digital I/O with port interrupt ADC10_A clock output Analog input A3 for 10-bit ADC
P1.2/ACLK/A2	9	I/O	General-purpose digital I/O with port interrupt ACLK clock output Analog input A2 for 10-bit ADC
P1.1/TA2.1/VeREF+/A1	10	I/O	General-purpose digital I/O with port interrupt Timer TA2 CCR1 capture: CCI1A input, compare: Out1 output Positive terminal for the ADC reference voltage for an external applied reference voltage Analog input A1 for 10-bit ADC
P1.0/TA1.1/VeREF-/A0	11	I/O	General-purpose digital I/O with port interrupt Timer TA1 CCR1 capture: CCI1A input, compare: Out1 output Negative terminal for the ADC reference voltage for an external applied reference voltage Analog input A0 for 10-bit ADC
P2.4/PM_TA2.0	12	I/O	General-purpose digital I/O with port interrupt and mappable secondary function Default mapping: Timer TA2 capture CCR0: CCI0A input, compare: Out0 output
P2.5/PM_UCB0SOMI/ PM_UCB0SCL	13	I/O	General-purpose digital I/O with port interrupt and mappable secondary function Default mapping: eUSCI_B0 SPI slave out master in Default mapping: eUSCI_B0 I^2C clock
P2.6/PM_UCB0SIMO/ PM_UCB0SDA	14	I/O	General-purpose digital I/O with port interrupt and mappable secondary function Default mapping: eUSCI_B0 SPI slave in master out Default mapping: eUSCI_B0 I^2C data
P2.7/PM_UCB0CLK	15	I/O	General-purpose digital I/O with port interrupt and mappable secondary function Default mapping: eUSCI_B0 clock input/output

(1) I = input, O = output
(2) Before enabling the analog function (A3), pull this pin low by setting the port function to output low or to input with the internal pulldown resistor enabled.

Copyright © 2014–2018, Texas Instruments Incorporated

Table 4-3. Terminal Functions – PEU Package (continued)

TERMINAL		I/O[1]	DESCRIPTION
NAME	NO. PEU		
P3.0/PM_UCA0RXD/ PM_UCA0SOMI	16	I/O	General-purpose digital I/O with mappable secondary function Default mapping: eUSCI_A0 UART receive data Default mapping: eUSCI_A0 SPI slave out master in
P3.1/PM_UCA0TXD/ PM_UCA0SIMO	17	I/O	General-purpose digital I/O with mappable secondary function Default mapping: eUSCI_A0 UART transmit data Default mapping: eUSCI_A0 SPI slave in master out
P3.2/PM_UCA0CLK	18	I/O	General-purpose digital I/O with mappable secondary function Default mapping: eUSCI_A0 clock input/output
P3.3/PM_UCA1CLK	19	I/O	General-purpose digital I/O with mappable secondary function Default mapping: eUSCI_A1 clock input/output
P3.4/PM_UCA1RXD/ PM_UCA1SOMI	20	I/O	General-purpose digital I/O with mappable secondary function Default mapping: eUSCI_A1 UART receive data Default mapping: eUSCI_A1 SPI slave out master in
P3.5/PM_UCA1TXD/ PM_UCA1SIMO	21	I/O	General-purpose digital I/O with mappable secondary function Default mapping: eUSCI_A1 UART transmit data Default mapping: eUSCI_A1 SPI slave in master out
COM0	22	O	LCD common output COM0 for LCD backplane
COM1	23	O	LCD common output COM1 for LCD backplane
P1.6/COM2	24	I/O	General-purpose digital I/O with port interrupt LCD common output COM2 for LCD backplane
P1.7/COM3	25	I/O	General-purpose digital I/O with port interrupt LCD common output COM3 for LCD backplane
P5.0/COM4	26	I/O	General-purpose digital I/O LCD common output COM4 for LCD backplane
P5.1/COM5	27	I/O	General-purpose digital I/O LCD common output COM5 for LCD backplane
P5.2/COM6	28	I/O	General-purpose digital I/O LCD common output COM6 for LCD backplane
P5.3/COM7	29	I/O	General-purpose digital I/O LCD common output COM7 for LCD backplane
LCDCAP/R33	30	I/O	LCD capacitor connection Input/output port of most positive analog LCD voltage (V1) **CAUTION**: This pin must be connected to DVSS if not used.
P5.4/SDCLK/R23	31	I/O	General-purpose digital I/O SD24_B bit-stream clock input/output Input/Output port of second most positive analog LCD voltage (V2)
P5.5/SD0DIO/ LCDREF/R13	32	I/O	General-purpose digital I/O SD24_B converter 0 bit-stream data input/output External reference voltage input for regulated LCD voltage Input/output port of third most positive analog LCD voltage (V3 or V4)
P5.6/SD1DIO/R03	33	I/O	General-purpose digital I/O SD24_B converter 1 bit-stream data input/output Input/output port of lowest analog LCD voltage (V5)

Table 4-3. Terminal Functions – PEU Package (continued)

TERMINAL		I/O[1]	DESCRIPTION
NAME	NO. PEU		
P5.7/SD2DIO/CB2	34	I/O	General-purpose digital I/O SD24_B converter 2 bit-stream data input/output Comparator_B input CB2
P6.0/SD3DIO	35	I/O	General-purpose digital I/O SD24_B converter 3 bit-stream data input/output
P3.6/PM_UCA2RXD/ PM_UCA2SOMI	36	I/O	General-purpose digital I/O with mappable secondary function Default mapping: eUSCI_A2 UART receive data Default mapping: eUSCI_A2 SPI slave out master in
P3.7/PM_UCA2TXD/ PM_UCA2SIMO	37	I/O	General-purpose digital I/O with mappable secondary function Default mapping: eUSCI_A2 UART transmit data Default mapping: eUSCI_A2 SPI slave in master out
P4.0/PM_UCA2CLK	38	I/O	General-purpose digital I/O with mappable secondary function Default mapping: eUSCI_A2 clock input/output
P4.1/PM_UCA3RXD/ PM_UCA3SOMI	39	I/O	General-purpose digital I/O with mappable secondary function Default mapping: eUSCI_A3 UART receive data Default mapping: eUSCI_A3 SPI slave out master in
P4.2/PM_UCA3TXD/ PM_UCA3SIMO	40	I/O	General-purpose digital I/O with mappable secondary function Default mapping: eUSCI_A3 UART transmit data Default mapping: eUSCI_A3 SPI slave in master out
P4.3/PM_UCA3CLK	41	I/O	General-purpose digital I/O with mappable secondary function Default mapping: eUSCI_A3 clock input/output
P4.4/PM_UCB1SOMI/ PM_UCB1SCL	42	I/O	General-purpose digital I/O with mappable secondary function Default mapping: eUSCI_B1 SPI slave out, master in Default mapping: eUSCI_B1 I^2C clock
P4.5/PM_UCB1SIMO/ PM_UCB1SDA	43	I/O	General-purpose digital I/O with mappable secondary function Default mapping: eUSCI_B1 SPI slave in, master out Default mapping: eUSCI_B1 I^2C data
P4.6/PM_UCB1CLK	44	I/O	General-purpose digital I/O with mappable secondary function Default mapping: eUSCI_B1 clock input/output
P4.7/PM_TA3.0	45	I/O	General-purpose digital I/O with mappable secondary function Default mapping: Timer TA3 capture CCR0: CCI0A input, compare: Out0 output
P6.1/SD4DIO/S39	46	I/O	General-purpose digital I/O SD24_B converter 4 bit-stream data input/output (not available in F674x1A devices) LCD segment output S39
P6.2/SD5DIO/S38	47	I/O	General-purpose digital I/O SD24_B converter 5 bit-stream data input/output (not available in F674x1A devices) LCD segment output S38
P6.3/SD6DIO/S37	48	I/O	General-purpose digital I/O SD24_B converter 6 bit-stream data input/output (not available in F676x1A, F674x1A devices) LCD segment output S37
P6.4/S36	49	I/O	General-purpose digital I/O LCD segment output S36
P6.5/S35	50	I/O	General-purpose digital I/O LCD segment output S35

Copyright © 2014–2018, Texas Instruments Incorporated

Table 4-3. Terminal Functions – PEU Package (continued)

TERMINAL		I/O[1]	DESCRIPTION
NAME	NO. PEU		
P6.6/S34	51	I/O	General-purpose digital I/O LCD segment output S34
P6.7/S33	52	I/O	General-purpose digital I/O LCD segment output S33
P7.0/S32	53	I/O	General-purpose digital I/O LCD segment output S32
P7.1/S31	54	I/O	General-purpose digital I/O LCD segment output S31
P7.2/S30	55	I/O	General-purpose digital I/O LCD segment output S30
P7.3/S29	56	I/O	General-purpose digital I/O LCD segment output S29
P7.4/S28	57	I/O	General-purpose digital I/O LCD segment output S28
P7.5/S27	58	I/O	General-purpose digital I/O LCD segment output S27
P7.6/S26	59	I/O	General-purpose digital I/O LCD segment output S26
P7.7/S25	60	I/O	General-purpose digital I/O LCD segment output S25
P8.0/S24	61	I/O	General-purpose digital I/O LCD segment output S24
P8.1/S23	62	I/O	General-purpose digital I/O LCD segment output S23
P8.2/S22	63	I/O	General-purpose digital I/O LCD segment output S22
P8.3/S21	64	I/O	General-purpose digital I/O LCD segment output S21
P8.4/S20	65	I/O	General-purpose digital I/O LCD segment output S20
P8.5/S19	66	I/O	General-purpose digital I/O LCD segment output S19
P8.6/S18	67	I/O	General-purpose digital I/O LCD segment output S18
P8.7/S17	68	I/O	General-purpose digital I/O LCD segment output S17
VDSYS2[3]	69		Digital power supply for I/Os
DVSS2	70		Digital ground supply
P9.0/S16	71	I/O	General-purpose digital I/O LCD segment output S16
P9.1/S15	72	I/O	General-purpose digital I/O LCD segment output S15
P9.2/S14	73	I/O	General-purpose digital I/O LCD segment output S14

(3) The pins VDSYS1 and VDSYS2 must be connected externally on board for proper device operation.

Table 4-3. Terminal Functions – PEU Package (continued)

TERMINAL		I/O[1]	DESCRIPTION
NAME	NO. PEU		
P9.3/S13	74	I/O	General-purpose digital I/O LCD segment output S13
P9.4/S12	75	I/O	General-purpose digital I/O LCD segment output S12
P9.5/S11	76	I/O	General-purpose digital I/O LCD segment output S11
P9.6/S10	77	I/O	General-purpose digital I/O LCD segment output S10
P9.7/S9	78	I/O	General-purpose digital I/O LCD segment output S9
P10.0/S8	79	I/O	General-purpose digital I/O LCD segment output S8
P10.1/S7	80	I/O	General-purpose digital I/O LCD segment output S7
P10.2/S6	81	I/O	General-purpose digital I/O LCD segment output S6
P10.3/S5	82	I/O	General-purpose digital I/O LCD segment output S5
P10.4/S4	83	I/O	General-purpose digital I/O LCD segment output S4
P10.5/S3	84	I/O	General-purpose digital I/O LCD segment output S3
P10.6/S2	85	I/O	General-purpose digital I/O LCD segment output S2
P10.7/S1	86	I/O	General-purpose digital I/O LCD segment output S1
P11.0/S0	87	I/O	General-purpose digital I/O LCD segment output S0
P11.1/TA3.1/CB3	88	I/O	General-purpose digital I/O Timer TA3 capture CCR1: CCI1A input, compare: Out1 output Comparator_B input CB3
P11.2/TA1.1	89	I/O	General-purpose digital I/O Timer TA1 capture CCR1: CCI1A input, compare: Out1 output
P11.3/TA2.1	90	I/O	General-purpose digital I/O Timer TA2 capture CCR1: CCI1A input, compare: Out1 output
P11.4/CBOUT	91	I/O	General-purpose digital I/O Comparator_B output
P11.5/TACLK/RTCCLK	92	I/O	General-purpose digital I/O Timer clock input TACLK for TA0, TA1, TA2, TA3 RTCCLK clock output
P2.0/PM_TA0.0/BSL_TX	93	I/O	General-purpose digital I/O with port interrupt and mappable secondary function Default mapping: Timer TA0 capture CCR0: CCI0A input, compare: Out0 output Bootloader: Data transmit

Copyright © 2014–2018, Texas Instruments Incorporated

Table 4-3. Terminal Functions – PEU Package (continued)

TERMINAL		I/O[1]	DESCRIPTION
NAME	NO. PEU		
P2.1/PM_TA0.1/BSL_RX	94	I/O	General-purpose digital I/O with port interrupt and mappable secondary function Default mapping: Timer TA0 capture CCR1: CCI1A input, compare: Out1 output Bootloader: Data receive
P2.2/PM_TA0.2	95	I/O	General-purpose digital I/O with port interrupt and mappable secondary function Default mapping: Timer TA0 capture CCR2: CCI2A input, compare: Out2 output
P2.3/PM_TA1.0	96	I/O	General-purpose digital I/O port interrupt and with mappable secondary function Default mapping: Timer TA1 capture CCR0: CCI0A input, compare: Out0 output
TEST/SBWTCK	97	I	Test mode pin – select digital I/O on JTAG pins Spy-Bi-Wire input clock
PJ.0/TDO	98	I/O	General-purpose digital I/O Test data output
PJ.1/TDI/TCLK	99	I/O	General-purpose digital I/O Test data input Test clock input
PJ.2/TMS	100	I/O	General-purpose digital I/O Test mode select
PJ.3/TCK	101	I/O	General-purpose digital I/O Test clock
$\overline{\text{RST}}$/NMI/SBWTDIO	102	I/O	Reset input, active-low[4] Nonmaskable interrupt input Spy-By-Wire data input/output
SD0P0	103	I	SD24_B positive analog input for converter 0[5]
SD0N0	104	I	SD24_B negative analog input for converter 0[5]
SD1P0	105	I	SD24_B positive analog input for converter 1[5]
SD1N0	106	I	SD24_B negative analog input for converter 1[5]
SD2P0	107	I	SD24_B positive analog input for converter 2[5]
SD2N0	108	I	SD24_B negative analog input for converter 2[5]
SD3P0	109	I	SD24_B positive analog input for converter 3[5]
SD3N0	110	I	SD24_B negative analog input for converter 3[4]
VASYS2	111		Analog power supply selected between AVCC, AUXVCC1, AUXVCC2. Connect recommended capacitor value of C_{VSYS}.
AVSS2	112		Analog ground supply
VREF	113	I	SD24_B external reference voltage
SD4P0	114	I	SD24_B positive analog input for converter 4[5] (not available on F674x1A devices)
SD4N0	115	I	SD24_B negative analog input for converter 4[5] (not available on F674x1A devices)
SD5P0	116	I	SD24_B positive analog input for converter 5[5] (not available on F674x1A devices)
SD5N0	117	I	SD24_B negative analog input for converter 5[5] (not available on F674x1A devices)
SD6P0	118	I	SD24_B positive analog input for converter 6[5] (not available on F676x1A, F674x1A devices)
SD6N0	119	I	SD24_B negative analog input for converter 6[5] (not available on F676x1A, F674x1A devices)
AVSS1	120		Analog ground supply
AVCC	121		Analog power supply
VASYS1	122		Analog power supply selected between AVCC, AUXVCC1, AUXVCC2. Connect recommended capacitor value of C_{VSYS}.
AUXVCC2	123		Auxiliary power supply AUXVCC2

(4) When this pin is configured as reset, the internal pullup resistor is enabled by default.
(5) TI recommends shorting unused analog input pairs and connecting them to analog ground.

Table 4-3. Terminal Functions – PEU Package (continued)

TERMINAL		I/O[1]	DESCRIPTION
NAME	NO. PEU		
AUXVCC1	124		Auxiliary power supply AUXVCC1
VDSYS1[3]	125		Digital power supply selected between DVCC, AUXVCC1, AUXVCC2. Connect recommended capacitor value of C_{VSYS}.
DVCC	126		Digital power supply
DVSS1	127		Digital ground supply
VCORE[6]	128		Regulated core power supply (internal use only, no external current loading)

(6) VCORE is for internal use only. No external current loading is possible. VCORE should only be connected to the recommended capacitor value, C_{VCORE}.

Copyright © 2014–2018, Texas Instruments Incorporated

Table 4-4 describes the signals for devices in the PZ package. See Table 4-3 for the signals in the PEU package.

Table 4-4. Terminal Functions – PZ Package

TERMINAL		I/O(1)	DESCRIPTION
NAME	NO. PZ		
SD0P0	1	I	SD24_B positive analog input for converter 0(2)
SD0N0	2	I	SD24_B negative analog input for converter 0(2)
SD1P0	3	I	SD24_B positive analog input for converter 1(2)
SD1N0	4	I	SD24_B negative analog input for converter 1(2)
SD2P0	5	I	SD24_B positive analog input for converter 2(2)
SD2N0	6	I	SD24_B negative analog input for converter 2(2)
SD3P0	7	I	SD24_B positive analog input for converter 3(2)
SD3N0	8	I	SD24_B negative analog input for converter 3(2)
VASYS2	9		Analog power supply selected between AVCC, AUXVCC1, AUXVCC2. Connect recommended capacitor value of C_{VSYS}.
AVSS2	10		Analog ground supply
VREF	11	I	SD24_B external reference voltage
SD4P0	12	I	SD24_B positive analog input for converter 4(2) (not available on F674x devices)
SD4N0	13	I	SD24_B negative analog input for converter 4(2) (not available on F674x1A devices)
SD5P0	14	I	SD24_B positive analog input for converter 5(2) (not available on F674x1A devices)
SD5N0	15	I	SD24_B negative analog input for converter 5(2) (not available on F674x1A devices)
SD6P0	16	I	SD24_B positive analog input for converter 6(2) (not available on F676x1A, F674x1A devices)
SD6N0	17	I	SD24_B negative analog input for converter 6(2) (not available on F676x1A, F674x1A devices)
AVSS1	18		Analog ground supply
AVCC	19		Analog power supply
VASYS1	20		Analog power supply selected between AVCC, AUXVCC1, AUXVCC2. Connect recommended capacitor value of C_{VSYS}
AUXVCC2	21		Auxiliary power supply AUXVCC2
AUXVCC1	22		Auxiliary power supply AUXVCC1
VDSYS1 (3)	23		Digital power supply selected between DVCC, AUXVCC1, AUXVCC2. Connect recommended capacitor value of C_{VSYS}.
DVCC	24		Digital power supply
DVSS1	25		Digital ground supply
VCORE (4)	26		Regulated core power supply (internal use only, no external current loading)
XIN	27	I/O	Input terminal for crystal oscillator
XOUT	28	I/O	Output terminal for crystal oscillator
AUXVCC3	29		Auxiliary power supply AUXVCC3 for backup subsystem
RTCCAP1	30	I	External time capture pin 1 for RTC_C
RTCCAP0	31	I	External time capture pin 0 for RTC_C
P1.5/SMCLK/CB0/A5	32	I/O	General-purpose digital I/O with port interrupt SMCLK clock output Comparator_B input CB0 Analog input A5 for 10-bit ADC

(1) I = input, O = output
(2) TI recommends shorting unused analog input pairs and connecting them to analog ground.
(3) The pins VDSYS1 and VDSYS2 must be connected externally on board for proper device operation.
(4) VCORE is for internal use only. No external current loading is possible. VCORE should only be connected to the recommended capacitor value, C_{VCORE}.

Table 4-4. Terminal Functions – PZ Package (continued)

TERMINAL		I/O[1]	DESCRIPTION
NAME	NO. PZ		
P1.4/MCLK/CB1/A4	33	I/O	General-purpose digital I/O with port interrupt MCLK clock output Comparator_B input CB1 Analog input A4 for 10-bit ADC
P1.3/ADC10CLK/A3	34	I/O	General-purpose digital I/O with port interrupt ADC10_A clock output Analog input A3 for 10-bit ADC
P1.2/ACLK/A2	35	I/O	General-purpose digital I/O with port interrupt ACLK clock output Analog input A2 for 10-bit ADC
P1.1/TA2.1/CBOUT/ VeREF+/A1	36	I/O	General-purpose digital I/O with port interrupt Timer TA2 CCR1 capture: CCI1A input, compare: Out1 output Comparator_B Output Positive terminal for the ADC reference voltage for an external applied reference voltage Analog input A1 for 10-bit ADC
P1.0/TA1.1/VeREF-/A0	37	I/O	General-purpose digital I/O with port interrupt Timer TA1 CCR1 capture: CCI1A input, compare: Out1 output Negative terminal for the ADC reference voltage for an external applied reference voltage Analog input A0 for 10-bit ADC
COM0	38	I/O	LCD common output COM0 for LCD backplane
COM1	39	I/O	LCD common output COM1 for LCD backplane
P1.6/COM2	40	I/O	General-purpose digital I/O with port interrupt LCD common output COM2 for LCD backplane
P1.7/COM3	41	I/O	General-purpose digital I/O with port interrupt LCD common output COM3 for LCD backplane
P2.0/PM_TA0.0/ BSL_TX/COM4	42	I/O	General-purpose digital I/O with port interrupt and mappable secondary function Default Mapping: Timer TA0 CCR0 capture: CCI0A input, compare: Out0 output Bootloader: Data transmit LCD common output COM4 for LCD backplane
P2.1/PM_TA0.1/ BSL_RX/COM5	43	I/O	General-purpose digital I/O with port interrupt and mappable secondary function Default Mapping: Timer TA0 CCR1 capture: CCI1A input, compare: Out1 output Bootloader: Data receive LCD common output COM5 for LCD backplane
P2.2/PM_TA0.2/COM6	44	I/O	General-purpose digital I/O with port interrupt and mappable secondary function Default Mapping: Timer TA0 CCR0 capture: CCI2A input, compare: Out2 output LCD common output COM6 for LCD backplane
P2.3/PM_TA1.0/COM7	45	I/O	General-purpose digital I/O with port interrupt and mappable secondary function Default Mapping: Timer TA1 CCR0 capture: CCI0A input, compare: Out0 output LCD common output COM7 for LCD backplane
LCDCAP/R33	46	I/O	LCD capacitor connection Input/output port of most positive analog LCD voltage (V1) **CAUTION**: This pin must be connected to DVSS if not used.
P2.4/PM_TA2.0/R23	47	I/O	General-purpose digital I/O with port interrupt and mappable secondary function Default Mapping: Timer TA2 CCR0 capture: CCI0A input, compare: Out0 output Input/output port of second most positive analog LCD voltage (V2)

Copyright © 2014–2018, Texas Instruments Incorporated

Table 4-4. Terminal Functions – PZ Package (continued)

TERMINAL		I/O(1)	DESCRIPTION
NAME	NO. PZ		
P2.5/PM_UCB0SOMI/ PM_UCB0SCL/LCDREF/ R13	48	I/O	General-purpose digital I/O with port interrupt and mappable secondary function Default mapping: eUSCI_B0 SPI slave out, master in Default mapping: eUSCI_B0 I^2C clock External reference voltage input for regulated LCD voltage Input/output port of third most positive analog LCD voltage (V3 or V4)
P2.6/PM_UCB0SIMO/ PM_UCB0SDA/R03	49	I/O	General-purpose digital I/O with port interrupt and mappable secondary function Default mapping: eUSCI_B0 SPI slave in, master out Default mapping: eUSCI_B0 I^2C data Input/output port of lowest analog LCD voltage (V5)
P2.7/PM_UCB0CLK/CB2	50	I/O	General-purpose digital I/O with port interrupt and mappable secondary function Default mapping: eUSCI_B0 clock input/output Comparator_B input CB2
P3.0/PM_UCA0RXD/ PM_UCA0SOMI	51	I/O	General-purpose digital I/O with mappable secondary function Default mapping: eUSCI_A0 UART receive data Default mapping: eUSCI_A0 SPI slave out, master in
P3.1/PM_UCA0TXD/ PM_UCA0SIMO/S39	52	I/O	General-purpose digital I/O with mappable secondary function Default mapping: eUSCI_A0 UART transmit data Default mapping: eUSCI_A0 SPI slave in, master out LCD segment output S39
P3.2/PM_UCA0CLK/S38	53	I/O	General-purpose digital I/O with mappable secondary function Default mapping: eUSCI_A0 clock input/output LCD segment output S38
P3.3/PM_UCA1CLK/S37	54	I/O	General-purpose digital I/O with mappable secondary function Default mapping: eUSCI_A1 clock input/output LCD segment output S37
P3.4/PM_UCA1RXD/ PM_UCA1SOMI/S36	55	I/O	General-purpose digital I/O with mappable secondary function Default mapping: eUSCI_A1 UART receive data Default mapping: eUSCI_A1 SPI slave out, master in LCD segment output S36
P3.5/PM_UCA1TXD/ PM_UCA1SIMO/S35	56	I/O	General-purpose digital I/O with mappable secondary function Default mapping: eUSCI_A1 UART transmit data Default mapping: eUSCI_A1 SPI slave in, master out LCD segment output S35
P3.6/PM_UCA2RXD/ PM_UCA2SOMI/S34	57	I/O	General-purpose digital I/O with mappable secondary function Default mapping: eUSCI_A2 UART receive data Default mapping: eUSCI_A2 SPI slave out, master in LCD segment output S34
P3.7/PM_UCA2TXD/ PM_UCA2SIMO/S33	58	I/O	General-purpose digital I/O with mappable secondary function Default mapping: eUSCI_A2 UART transmit data Default mapping: eUSCI_A2 SPI slave in, master out LCD segment output S33
P4.0/PM_UCA2CLK/S32	59	I/O	General-purpose digital I/O with mappable secondary function Default mapping: eUSCI_A2 clock input/output LCD segment output S32

Table 4-4. Terminal Functions – PZ Package (continued)

TERMINAL		I/O[1]	DESCRIPTION
NAME	NO. PZ		
P4.1/PM_UCA3RXD/ PM_UCA3SOMI/S31	60	I/O	General-purpose digital I/O with mappable secondary function Default mapping: eUSCI_A3 UART receive data Default mapping: eUSCI_A3 SPI slave out, master in LCD segment output S31
P4.2/PM_UCA3TXD/ PM_UCA3SIMO/S30	61	I/O	General-purpose digital I/O with mappable secondary function Default mapping: eUSCI_A3 UART transmit data Default mapping: eUSCI_A3 SPI slave in, master out LCD segment output S30
P4.3/PM_UCA3CLK/S29	62	I/O	General-purpose digital I/O with mappable secondary function Default mapping: eUSCI_A3 clock input/output LCD segment output S29
P4.4/PM_UCB1SOMI/ PM_UCB1SCL/S28	63	I/O	General-purpose digital I/O with mappable secondary function Default mapping: eUSCI_B1 SPI slave out, master in Default mapping: eUSCI_B1 I^2C clock LCD segment output S28
P4.5/PM_UCB1SIMO/ PM_UCB1SDA/S27	64	I/O	General-purpose digital I/O with mappable secondary function Default mapping: eUSCI_B1 SPI slave in, master out Default mapping: eUSCI_B1 I^2C data LCD segment output S27
P4.6/PM_UCB1CLK/S26	65	I/O	General-purpose digital I/O with mappable secondary function Default mapping: eUSCI_B1 clock input/output LCD segment output S26
P4.7/PM_TA3.0/S25	66	I/O	General-purpose digital I/O with mappable secondary function Default Mapping: Timer TA3 CCR0 capture: CCI0A input, compare: Out0 output LCD segment output S25
P5.0/SDCLK/S24	67	I/O	General-purpose digital I/O SD24_B bit-stream clock input/output LCD segment output S24
P5.1/PM_SD0DIO/S23	68	I/O	General-purpose digital I/O Default mapping: SD24_B converter 0 bit-stream data input/output LCD segment output S23
P5.2/PM_SD1DIO/S22	69	I/O	General-purpose digital I/O Default mapping: SD24_B converter 1 bit-stream data input/output LCD segment output S22
P5.3/PM_SD2DIO/S21	70	I/O	General-purpose digital I/O Default mapping: SD24_B converter 2 bit-stream data input/output LCD segment output S21
P5.4/PM_SD3DIO/S20	71	I/O	General-purpose digital I/O Default mapping: SD24_B converter 3 bit-stream data input/output LCD segment output S20
P5.5/PM_SD4DIO/S19	72	I/O	General-purpose digital I/O Default mapping: SD24_B converter 4 bit-stream data input/output (not available on F674x1A devices) LCD segment output S19

Copyright © 2014–2018, Texas Instruments Incorporated

Table 4-4. Terminal Functions – PZ Package (continued)

TERMINAL		I/O[1]	DESCRIPTION
NAME	NO. PZ		
P5.6/PM_SD5DIO/S18	73	I/O	General-purpose digital I/O Default mapping: SD24_B converter 5 bit-stream data input/output (not available on F674x1A devices) LCD segment output S18
P5.7/PM_SD6DIO/S17	74	I/O	General-purpose digital I/O Default mapping: SD24_B converter 6 bit-stream data input/output (not available on F676x1A or F674x1A devices) LCD segment output S17
VDSYS2[3]	75		Digital power supply for I/Os
DVSS2	76		Digital ground supply
P6.0/S16	77	I/O	General-purpose digital I/O LCD segment output S16
P6.1/S15	78	I/O	General-purpose digital I/O LCD segment output S15
P6.2/S14	79	I/O	General-purpose digital I/O LCD segment output S14
P6.3/S13	80	I/O	General-purpose digital I/O LCD segment output S13
P6.4/S12	81	I/O	General-purpose digital I/O LCD segment output S12
P6.5/S11	82	I/O	General-purpose digital I/O LCD segment output S11
P6.6/S10	83	I/O	General-purpose digital I/O LCD segment output S10
P6.7/S9	84	I/O	General-purpose digital I/O LCD segment output S9
P7.0/S8	85	I/O	General-purpose digital I/O LCD segment output S8
P7.1/S7	86	I/O	General-purpose digital I/O LCD segment output S7
P7.2/S6	87	I/O	General-purpose digital I/O LCD segment output S6
P7.3/S5	88	I/O	General-purpose digital I/O LCD segment output S5
P7.4/S4	89	I/O	General-purpose digital I/O LCD segment output S4
P7.5/S3	90	I/O	General-purpose digital I/O LCD segment output S3
P7.6/S2	91	I/O	General-purpose digital I/O LCD segment output S2
P7.7/S1	92	I/O	General-purpose digital I/O LCD segment output S1
P8.0/S0	93	I/O	General-purpose digital I/O LCD segment output S0

Table 4-4. Terminal Functions – PZ Package (continued)

TERMINAL		I/O[1]	DESCRIPTION
NAME	NO. PZ		
P8.1/TACLK/RTCCLK/CB3	94	I/O	General-purpose digital I/O Timer clock input TACLK for TA0, TA1, TA2, TA3 RTCCLK clock output Comparator_B input CB3
TEST/SBWTCK	95	I	Test mode pin – select digital I/O on JTAG pins Spy-By-Wire input clock
PJ.0/TDO	96	I/O	General-purpose digital I/O Test data output
PJ.1/TDI/TCLK	97	I/O	General-purpose digital I/O Test data input or Test clock input
PJ.2/TMS	98	I/O	General-purpose digital I/O Test mode select
PJ.3/TCK	99	I/O	General-purpose digital I/O Test clock
$\overline{\text{RST}}$/NMI/SBWTDIO	100	I/O	Reset input active low[5] Nonmaskable interrupt input Spy-By-Wire data input/output

(5) When this pin is configured as reset, the internal pullup resistor is enabled by default.

Copyright © 2014–2018, Texas Instruments Incorporated

4.3 Pin Multiplexing

Pin multiplexing for these devices is controlled by both register settings and operating modes (for example, if the device is in test mode). For details of the settings for each pin and schematics of the multiplexed ports, see Section 6.12.

4.4 Connection of Unused Pins

Table 4-5 lists the correct termination of unused pins.

Table 4-5. Connection of Unused Pins(1)

PIN	POTENTIAL	COMMENT
AVCC	DV_{CC}	
AVSS	DV_{SS}	
Px.y	Open	Switched to port function, output direction (PxDIR.n = 1). Px.y represents port x and bit y of port x (for example, P1.0, P1.1, P2.2, PJ.0, PJ.1)
XIN	DV_{SS}	For dedicated XIN pins only. XIN pins with shared GPIO functions should be programmed to GPIO and follow Px.y recommendations.
XOUT	Open	For dedicated XOUT pins only. XOUT pins with shared GPIO functions should be programmed to GPIO and follow Px.y recommendations.
LCDCAP	DV_{SS}	
$\overline{RST}$/NMI	DV_{CC} or V_{CC}	47-kΩ pullup or internal pullup selected with 10-nF (2.2 nF) pulldown(2)
PJ.0/TDO PJ.1/TDI PJ.2/TMS PJ.3/TCK	Open	The JTAG pins are shared with general-purpose I/O function (PJ.x). If not being used, these should be switched to port function, output direction (PJDIR.n = 1). When used as JTAG pins, these pins should remain open.
TEST	Open	This pin always has an internal pulldown enabled.

(1) Any unused pin with a secondary function that is shared with general-purpose I/O should follow the Px.y unused pin connection guidelines.
(2) The pulldown capacitor should not exceed 2.2 nF when using devices with Spy-Bi-Wire interface in Spy-Bi-Wire mode or in 4-wire JTAG mode with TI tools such as FET interfaces or GANG programmers.

5 Specifications

All graphs in this section are for typical conditions, unless otherwise noted.

Typical (TYP) values are specified at V_{CC} = 3.3 V and T_A = 25°C, unless otherwise noted.

5.1 Absolute Maximum Ratings

over operating free-air temperature range (unless otherwise noted)[1]

		MIN	MAX	UNIT
Voltage applied at DVCC to DVSS		–0.3	4.1	V
Voltage applied to pins[2]	All pins except VCORE[3], SD24_B input pins (SDxN0, SDxP0)[4], AUXVCC1, AUXVCC2, and AUXVCC3[5]	–0.3	V_{CC} + 0.3	V
Diode current at pins	All pins except SD24_B input pins (SDxN0, SDxP0)		±2	mA
	SD0N0, SD0P0, SD1N0, SD1P0, SD2N0, SD2P0, SD3N0, SD3P0, SD4N0, SD4P0, SD5N0, SD5P0, SD6N0, SD6P0[6]		2	
Maximum junction temperature, T_J			95	°C
Storage temperature, T_{stg}[7]		–55	105	°C

(1) Stresses beyond those listed under *Absolute Maximum Ratings* may cause permanent damage to the device. These are stress ratings only, and functional operation of the device at these or any other conditions beyond those indicated under *Recommended Operating Conditions* is not implied. Exposure to absolute-maximum-rated conditions for extended periods may affect device reliability.
(2) All voltages referenced to V_{SS} = V_{DVSS} = V_{AVSS}.
(3) VCORE is for internal device use only. No external DC loading or voltage should be applied.
(4) See Table 5-39 for SD24_B specifications.
(5) See Table 5-18 for AUX specifications.
(6) A protection diode is connected to V_{CC} for the SD24_B input pins. No protection diode is connected to V_{SS}.
(7) Higher temperature may be applied during board soldering according to the current JEDEC J-STD-020 specification with peak reflow temperatures not higher than classified on the device label on the shipping boxes or reels.

5.2 ESD Ratings

			VALUE	UNIT
$V_{(ESD)}$	Electrostatic discharge	Human-body model (HBM), per ANSI/ESDA/JEDEC JS-001[1]	±1000	V
		Charged-device model (CDM), per JEDEC specification JESD22-C101[2]	±250	

(1) JEDEC document JEP155 states that 500-V HBM allows safe manufacturing with a standard ESD control process. Pins listed as ±1000 V may actually have higher performance.
(2) JEDEC document JEP157 states that 250-V CDM allows safe manufacturing with a standard ESD control process. Pins listed as ±250 V may actually have higher performance.

5.3 Recommended Operating Conditions

			MIN	NOM	MAX	UNIT
V_{CC}	Supply voltage during program execution and flash programming (V_{AVCC} = V_{DVCC} = V_{CC})[1][2]	PMMCOREVx = 0	1.8		3.6	V
		PMMCOREVx = 0, 1	2.0		3.6	
		PMMCOREVx = 0, 1,3 2	2.2		3.6	
		PMMCOREVx = 0, 1, 2, 3	2.4		3.6	
V_{SS}	Supply voltage V_{AVSS} = V_{DVSS} = V_{SS}			0		V
T_A	Operating free-air temperature	I version	–40		85	°C
T_J	Operating junction temperature	I version	–40		85	°C
C_{VCORE}	Recommended capacitor at VCORE			470		nF
C_{DVCC}/ C_{VCORE}	Capacitor ratio of DVCC to VCORE		10			

(1) TI recommends powering AVCC and DVCC from the same source. A maximum difference of 0.3 V between $V_{(AVCC)}$ and $V_{(DVCC)}$ can be tolerated during power up and operation.
(2) The minimum supply voltage is defined by the supervisor SVS levels when it is enabled. See the Table 5-14 threshold parameters for the exact values and further details.

Copyright © 2014–2018, Texas Instruments Incorporated

Recommended Operating Conditions *(continued)*

			MIN	NOM	MAX	UNIT
f_{SYSTEM}	Processor frequency (maximum MCLK frequency)(3) (4) (see Figure 5-1)	PMMCOREVx = 0, 1.8 V ≤ V_{CC} ≤ 3.6 V (default condition)	0		8.0	MHz
		PMMCOREVx = 1, 2 V ≤ V_{CC} ≤ 3.6 V	0		12.0	
		PMMCOREVx = 2, 2.2 V ≤ V_{CC} ≤ 3.6 V	0		20.0	
		PMMCOREVx = 3, 2.4 V ≤ V_{CC} ≤ 3.6 V	0		25.0	
$I_{LOAD, DVCCD}$	Maximum load current that can be drawn from DVCC for core and IO ($I_{LOAD} = I_{CORE} + I_{IO}$)				20	mA
$I_{LOAD, AUX1D}$	Maximum load current that can be drawn from AUXVCC1 for core and IO ($I_{LOAD} = I_{CORE} + I_{IO}$)				20	mA
$I_{LOAD, AUX2D}$	Maximum load current that can be drawn from AUXVCC2 for core and IO ($I_{LOAD} = I_{CORE} + I_{IO}$)				20	mA
$I_{LOAD, AVCCA}$	Maximum load current that can be drawn from AVCC for analog modules ($I_{LOAD} = I_{Modules}$)				10	mA
$I_{LOAD, AUX1A}$	Maximum load current that can be drawn from AUXVCC1 for analog modules ($I_{LOAD} = I_{Modules}$)				5	mA
$I_{LOAD, AUX2A}$	Maximum load current that can be drawn from AUXVCC2 for analog modules ($I_{LOAD} = I_{Modules}$)				5	mA
P_{INT}	Internal power dissipation			V_{CC} x $I_{(DVCC)}$		W
P_{IO}	I/O power dissipation of the I/O pins powered by DVCC			($V_{CC} – V_{IOH}$) x I_{IOH} + V_{IOL} x I_{IOL}		W
P_{MAX}	Maximum allowed power dissipation, $P_{MAX} > P_{IO} + P_{INT}$			($T_J – T_A$) / θ_{JA}		W

(3) The MSP430 CPU is clocked directly with MCLK. Both the high and low phase of MCLK must not exceed the pulse duration of the specified maximum frequency.
(4) Modules may have a different maximum input clock specification. See the specification of the respective module in this data sheet.

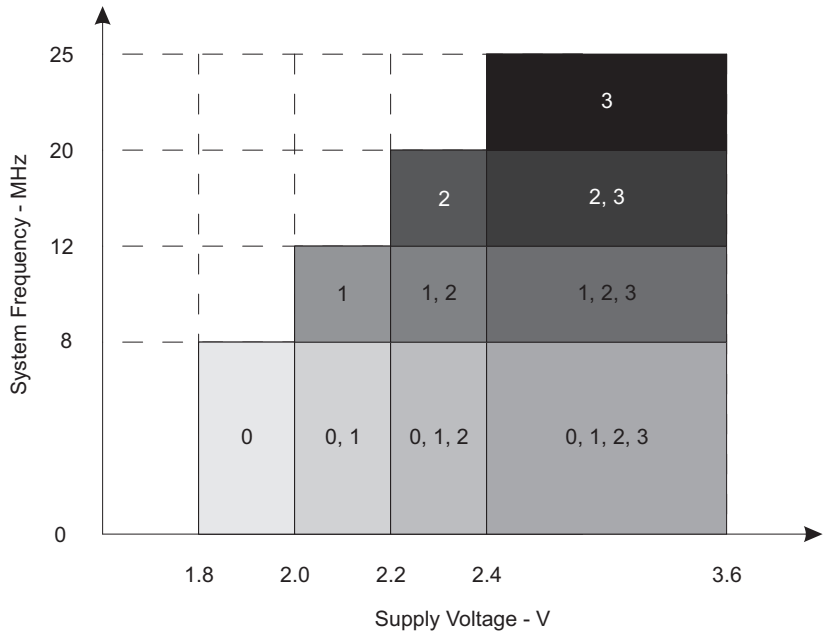

The numbers within the fields denote the supported PMMCOREVx settings.

Figure 5-1. Maximum System Frequency

5.4 Active Mode Supply Current Into V_{CC} Excluding External Current

over recommended operating free-air temperature (unless otherwise noted)(1)(2)(3)

PARAMETER	EXECUTION MEMORY	V_{CC}	PMMCOREV x	FREQUENCY ($f_{DCO} = f_{MCLK} = f_{SMCLK}$)										UNIT
				1 MHz		8 MHz		12 MHz		20 MHz		25 MHz		
				TYP	MAX	TYP	MAX	TYP	MAX	TYP	MAX	TYP	MAX	
$I_{AM, Flash}$ (4)	Flash	3 V	0	0.32	0.50	2.08	2.84							mA
			1	0.35		2.35		3.50	4.76					
			2	0.39		2.68		3.99		6.61	8.3			
			3	0.41		2.83		4.22		6.98		8.67	11.75	
$I_{AM, RAM}$ (5)	RAM	3 V	0	0.19		1.04								mA
			1	0.21		1.20		1.77						
			2	0.23		1.38		2.04		3.35				
			3	0.24		1.47		2.18		3.58		4.44		

(1) All inputs are tied to 0 V or to V_{CC}. Outputs do not source or sink any current.
(2) The currents are characterized with a Micro Crystal MS1 V-T1K crystal with a load capacitance of 12.5 pF. The internal and external load capacitance are chosen to closely match the required 12.5 pF.
(3) Characterized with program executing typical data processing.
f_{ACLK} = 32786 Hz, $f_{DCO} = f_{MCLK} = f_{SMCLK}$ at specified frequency.
XTS = CPUOFF = SCG0 = SCG1 = OSCOFF = SMCLKOFF = 0.
(4) Active mode supply current when program executes in flash at a nominal supply voltage of 3.0 V.
(5) Active mode supply current when program executes in RAM at a nominal supply voltage of 3.0 V.

Copyright © 2014–2018, Texas Instruments Incorporated

5.5 Low-Power Mode Supply Currents (Into V_{CC}) Excluding External Current

over recommended ranges of supply voltage and operating free-air temperature (unless otherwise noted)(1)(2)

PARAMETER		V_{CC}	PMMCOREVx	TEMPERATURE (T_A)						UNIT
				–40°C		25°C		85°C		
				TYP	MAX	TYP	MAX	TYP	MAX	
$I_{LPM0,1MHz}$	Low-power mode 0(3) (4)	2.2 V	0	70		75		86		µA
		3 V	3	81		87	105	100	130	
I_{LPM2}	Low-power mode 2(5) (4)	2.2 V	0	5.9		6.5		12.5		µA
		3 V	3	6.7		7.3	18	13.8	30	
$I_{LPM3,XT1LF}$	Low-power mode 3, crystal mode(6) (4)	2.2 V	0	1.50		2.0		7.8		µA
			1	1.65		2.2		8.3		
			2	1.80		2.4		8.6		
			3	1.84		2.4		8.6		
$I_{LPM3,XT1LF}$	Low-power mode 3, crystal mode(6) (4)	3 V	0	2.0		2.5		8.5		µA
			1	2.1		2.7		9.0		
			2	2.3		2.9		9.3		
			3	2.3		2.9		9.3	25	
$I_{LPM3,VLO}$	Low-power mode 3, VLO mode(7) (4)	3 V	0	1.3		1.7		7.5		µA
			1	1.3		1.8		7.9		
			2	1.4		1.9		8.2		
			3	1.4		1.9		8.2	25.0	
I_{LPM4}	Low-power mode 4(8) (4)	3 V	0	1.2		1.6		7.4		µA
			1	1.2		1.7		7.8		
			2	1.3		1.7		7.9		
			3	1.3		1.7		8.0	23.0	
$I_{LPM3.5}$	Low-power mode 3.5, RTC active on AUXVCC3(9)	2.2 V		0.7		0.9		1.4		µA
		3 V		1.0		1.2	1.5	1.8	3.0	
$I_{LPM4.5}$	Low-power mode 4.5(10)	3 V		0.6		0.7	1.0	1.2	2.0	µA

(1) All inputs are tied to 0 V or to V_{CC}. Outputs do not source or sink any current.
(2) The currents are characterized with a Micro Crystal MS1 V-T1K crystal with a load capacitance of 12.5 pF. The internal and external load capacitance are chosen to closely match the required 12.5 pF.
(3) Current for watchdog timer clocked by SMCLK included. ACLK = low frequency crystal operation (XTS = 0, XT1DRIVEx = 0). CPUOFF = 1, SCG0 = 0, SCG1 = 0, OSCOFF = 0 (LPM0), f_{ACLK} = 32768 Hz, f_{MCLK} = 0 MHz, f_{SMCLK} = f_{DCO} = 1 MHz
(4) Current for brownout, high-side supervisor (SVS_H) normal mode included. Low-side supervisor (SVS_L) and low-side monitor (SVM_L) disabled. High-side monitor (SVM_H) disabled. RAM retention enabled.
(5) Current for watchdog timer and RTC clocked by ACLK included. ACLK = low frequency crystal operation (XTS = 0, XT1DRIVEx = 0). CPUOFF = 1, SCG0 = 0, SCG1 = 1, OSCOFF = 0 (LPM2), f_{ACLK} = 32768 Hz, f_{MCLK} = 0 MHz, f_{SMCLK} = f_{DCO} = 0 MHz, DCO setting = 1-MHz operation, DCO bias generator enabled.
(6) Current for watchdog timer and RTC clocked by low-frequency clock included. ACLK = low frequency crystal operation (XTS = 0, XT1DRIVEx = 0).
CPUOFF = 1, SCG0 = 1, SCG1 = 1, OSCOFF = 0 (LPM3), f_{ACLK} = 32768 Hz, f_{MCLK} = f_{SMCLK} = f_{DCO} = 0 MHz
(7) Current for watchdog timer and RTC clocked by low-frequency clock included. ACLK = VLO.
CPUOFF = 1, SCG0 = 1, SCG1 = 1, OSCOFF = 0 (LPM3), f_{ACLK} = f_{VLO}, f_{MCLK} = f_{SMCLK} = f_{DCO} = 0 MHz
(8) CPUOFF = 1, SCG0 = 1, SCG1 = 1, OSCOFF = 1 (LPM4), f_{DCO} = f_{ACLK} = f_{MCLK} = f_{SMCLK} = 0 MHz
(9) f_{DCO} = f_{MCLK} = f_{SMCLK} = 0 MHz, f_{ACLK} = 32768 Hz, PMMREGOFF = 1, RTC active on AUXVCC3 supply
(10) f_{DCO} = f_{MCLK} = f_{SMCLK} = 0 MHz, f_{ACLK} = 0 Hz, PMMREGOFF = 1

Copyright © 2014–2018, Texas Instruments Incorporated

5.6 Low-Power Mode With LCD Supply Currents (Into V_{CC}) Excluding External Current

over recommended ranges of supply voltage and operating free-air temperature (unless otherwise noted)[1][2]

PARAMETER		V_{CC}	PMMCOREVx	TEMPERATURE (T_A)						UNIT
				–40°C		25°C		85°C		
				TYP	MAX	TYP	MAX	TYP	MAX	
I_{LPM3} LCD, ext. bias	Low-power mode 3 (LPM3) current, LCD 4-mux mode, external biasing[3] [4]	3 V	0	2.5		3.1		9.1		µA
			1	2.6		3.3		9.5		
			2	2.8		3.5		9.9		
			3	2.8		3.5	6.0	10.0	25.0	
I_{LPM3} LCD, int. bias	Low-power mode 3 (LPM3) current, LCD 4-mux mode, internal biasing, charge pump disabled[3] [5]	3 V	0	2.9		3.5		9.7		µA
			1	3.1		3.7		10.1		
			2	3.2		4.0		10.5		
			3	3.3		4.0	5.5	10.5	25.0	
I_{LPM3} LCD,CP	Low-power mode 3 (LPM3) current, LCD 4-mux mode, internal biasing, charge pump enabled[3] [6]	2.2 V	0	2.2		2.8		8.8		µA
			1	2.3		3.0		9.1		
			2	2.5		3.2		9.5		
		3 V	0	2.6		3.2		9.3		µA
			1	2.8		3.4		9.7		
			2	2.9		3.6		10.1		
			3	3.0		3.7		10.2		

(1) All inputs are tied to 0 V or to V_{CC}. Outputs do not source or sink any current.
(2) The currents are characterized with a Micro Crystal MS1 V-T1K crystal with a load capacitance of 12.5 pF. The internal and external load capacitance are chosen to closely match the required 12.5 pF.
(3) Current for watchdog timer and RTC clocked by ACLK included. ACLK = low frequency crystal operation (XTS = 0, XT1DRIVEx = 0). CPUOFF = 1, SCG0 = 1, SCG1 = 1, OSCOFF = 0 (LPM3), f_{ACLK} = 32768 Hz, $f_{MCLK} = f_{SMCLK} = f_{DCO}$ = 0 MHz
Current for brownout and high-side supervisor (SVS_H) in normal mode included. Low-side supervisor (SVS_L) and low-side monitor (SVM_L) disabled. High-side monitor (SVM_H) disabled. RAM retention enabled.
(4) LCDMx = 11 (4-mux mode), LCDREXT = 1, LCDEXTBIAS = 1 (external biasing), LCD2B = 0 (1/3 bias), LCDCPEN = 0 (charge pump disabled), LCDSSEL = 0, LCDPREx = 101, LCDDIVx = 00011 (f_{LCD} = 32768 Hz / 32 / 4 = 256 Hz)
Current through external resistors not included (voltage levels are supplied by test equipment).
Even segments (S0, S2, ...) = 0, and odd segments (S1, S3, ...) = 1. No LCD panel load.
(5) LCDMx = 11 (4-mux mode), LCDREXT = 0, LCDEXTBIAS = 0 (internal biasing), LCD2B = 0 (1/3 bias), LCDCPEN = 0 (charge pump disabled), LCDSSEL = 0, LCDPREx = 101, LCDDIVx = 00011 (f_{LCD} = 32768 Hz / 32 / 4 = 256 Hz)
Even segments (S0, S2, ...) = 0, and odd segments (S1, S3, ...) = 1. No LCD panel load.
(6) LCDMx = 11 (4-mux mode), LCDREXT = 0, LCDEXTBIAS = 0 (internal biasing), LCD2B = 0 (1/3 bias), LCDCPEN = 1 (charge pump enabled), VLCDx = 1000 (V_{LCD} = 3 V typical), LCDSSEL = 0, LCDPREx = 101, LCDDIVx = 00011 (f_{LCD} = 32768 Hz / 32 / 4 = 256 Hz)
Even segments (S0, S2, ...) = 0, and odd segments (S1, S3, ...) = 1. No LCD panel load.

Copyright © 2014–2018, Texas Instruments Incorporated

5.7 Thermal Resistance Characteristics

THERMAL METRIC[1] [2]			VALUE	UNIT
$R\theta_{JA}$	Junction-to-ambient thermal resistance, still air	LQFP 128 (PEU)	44.4	°C/W
		LQFP 100 (PZ)	42.9	
$R\theta_{JC(TOP)}$	Junction-to-case (top) thermal resistance	LQFP 128 (PEU)	10.5	°C/W
		LQFP 100 (PZ)	9.3	
$R\theta_{JC(BOTTOM)}$	Junction-to-case (bottom) thermal resistance	LQFP 128 (PEU)	N/A[3]	°C/W
		LQFP 100 (PZ)	N/A	
$R\theta_{JB}$	Junction-to-board thermal resistance	LQFP 128 (PEU)	23.1	°C/W
		LQFP 100 (PZ)	20.6	
Ψ_{JT}	Junction-to-package-top thermal characterization parameter	LQFP 128 (PEU)	0.4	°C/W
		LQFP 100 (PZ)	0.3	
Ψ_{JB}	Junction-to-board thermal characterization parameter	LQFP 128 (PEU)	22.8	°C/W
		LQFP 100 (PZ)	20.3	

(1) For more information about traditional and new thermal metrics, see *Semiconductor and IC Package Thermal Metrics*.
(2) These values are based on a JEDEC-defined 2S2P system (with the exception of the Theta JC [$R\theta_{JC}$] value, which is based on a JEDEC-defined 1S0P system) and will change based on environment as well as application. For more information, see these EIA/JEDEC standards:
- JESD51-2, *Integrated Circuits Thermal Test Method Environmental Conditions - Natural Convection (Still Air)*
- JESD51-3, *Low Effective Thermal Conductivity Test Board for Leaded Surface Mount Packages*
- JESD51-7, *High Effective Thermal Conductivity Test Board for Leaded Surface Mount Packages*
- JESD51-9, *Test Boards for Area Array Surface Mount Package Thermal Measurements*

(3) N/A = not applicable

5.8 Timing and Switching Characteristics

5.8.1 Reset Timing

Table 5-1 lists the device wake-up times.

Table 5-1. Wake-up Times From Low-Power Modes and Reset

over recommended ranges of supply voltage and operating free-air temperature (unless otherwise noted)

PARAMETER		TEST CONDITIONS		MIN	TYP	MAX	UNIT
$t_{WAKE-UP-FAST}$	Wake-up time from LPM2, LPM3, or LPM4 to active mode(1)	PMMCOREV = SVSMLRRL = n (where n = 0, 1, 2, or 3), SVSLFP = 1	$f_{MCLK} \geq 4.0$ MHz			5	µs
			$f_{MCLK} < 4.0$ MHz			10	
$t_{WAKE-UP-SLOW}$	Wake-up time from LPM2, LPM3, or LPM4 to active mode(2)(3)	PMMCOREV = SVSMLRRL = n (where n = 0, 1, 2, or 3), SVSLFP = 0			150	165	µs
$t_{WAKE-UP-LPM4.5}$	Wake-up time from LPM4.5 to active mode(4)				2	3	ms
$t_{WAKE-UP-RESET}$	Wake-up time from $\overline{RST}$ or BOR event to active mode(4)				2	3	ms

(1) This value represents the time from the wake-up event to the first active edge of MCLK. The wake-up time depends on the performance mode of the low-side supervisor (SVS_L) and low-side monitor (SVM_L). $t_{WAKE-UP-FAST}$ is possible with SVS_L and SVM_L in full performance mode or disabled. For specific register settings, see the *Low-Side SVS and SVM Control and Performance Mode Selection* section in the *Power Management Module and Supply Voltage Supervisor* chapter of the *MSP430x5xx and MSP430x6xx Family User's Guide*.
(2) This value represents the time from the wake-up event to the first active edge of MCLK. The wake-up time depends on the performance mode of the low-side supervisor (SVS_L) and low-side monitor (SVM_L). $t_{WAKE-UP-SLOW}$ is set with SVS_L and SVM_L in normal mode (low current mode). For specific register settings, see the *Low-Side SVS and SVM Control and Performance Mode Selection* section in the *Power Management Module and Supply Voltage Supervisor* chapter of the *MSP430x5xx and MSP430x6xx Family User's Guide*.
(3) The wake-up times from LPM0 and LPM1 to AM are not specified. They are proportional to MCLK cycle time but are not affected by the performance mode settings as for LPM2, LPM3, and LPM4.
(4) This value represents the time from the wake-up event to the reset vector execution.

Copyright © 2014–2018, Texas Instruments Incorporated

5.8.2 Clock Specifications

Table 5-2 lists the characteristics of the crystal oscillator in low-frequency mode.

Table 5-2. Crystal Oscillator, XT1, Low-Frequency Mode(1)

over recommended ranges of supply voltage and operating free-air temperature (unless otherwise noted)

PARAMETER		TEST CONDITIONS	V_{CC}	MIN	TYP	MAX	UNIT
$\Delta I_{DVCC.LF}$	Differential XT1 oscillator crystal current consumption from lowest drive setting, LF mode	f_{OSC} = 32768 Hz, XTS = 0, XT1BYPASS = 0, XT1DRIVEx = 1, T_A = 25°C	3 V		0.075		µA
		f_{OSC} = 32768 Hz, XTS = 0, XT1BYPASS = 0, XT1DRIVEx = 2, T_A = 25°C			0.170		
		f_{OSC} = 32768 Hz, XTS = 0, XT1BYPASS = 0, XT1DRIVEx = 3, T_A = 25°C			0.290		
$f_{XT1,LF0}$	XT1 oscillator crystal frequency, LF mode	XTS = 0, XT1BYPASS = 0			32768		Hz
$f_{XT1,LF,SW}$	XT1 oscillator logic-level square-wave input frequency, LF mode	XTS = 0, XT1BYPASS = 1(2) (3)		10	32.768	50	kHz
OA_{LF}	Oscillation allowance for LF crystals(4)	XTS = 0, XT1BYPASS = 0, XT1DRIVEx = 0, $f_{XT1,LF}$ = 32768 Hz, $C_{L,eff}$ = 6 pF			210		kΩ
		XTS = 0, XT1BYPASS = 0, XT1DRIVEx = 1, $f_{XT1,LF}$ = 32768 Hz, $C_{L,eff}$ = 12 pF			300		
$C_{L,eff}$	Integrated effective load capacitance, LF mode(5)	XTS = 0, XCAPx = 0(6)			1		pF
		XTS = 0, XCAPx = 1			5.5		
		XTS = 0, XCAPx = 2			8.5		
		XTS = 0, XCAPx = 3			12.0		
	Duty cycle, LF mode	XTS = 0, Measured at ACLK, $f_{XT1,LF}$ = 32768 Hz		30%		70%	
$f_{Fault,LF}$	Oscillator fault frequency, LF mode(7)	XTS = 0(8)		10		10000	Hz
$t_{START,LF}$	Start-up time, LF mode	f_{OSC} = 32768 Hz, XTS = 0, XT1BYPASS = 0, XT1DRIVEx = 0, T_A = 25°C, $C_{L,eff}$ = 6 pF	3 V		1000		ms
		f_{OSC} = 32768 Hz, XTS = 0, XT1BYPASS = 0, XT1DRIVEx = 3, T_A = 25°C, $C_{L,eff}$ = 12 pF			500		

(1) To improve EMI on the XT1 oscillator, the following guidelines should be observed.
- Keep the trace between the device and the crystal as short as possible.
- Design a good ground plane around the oscillator pins.
- Prevent crosstalk from other clock or data lines into oscillator pins XIN and XOUT.
- Avoid running PCB traces underneath or adjacent to the XIN and XOUT pins.
- Use assembly materials and processes that avoid any parasitic load on the oscillator XIN and XOUT pins.
- If conformal coating is used, make sure that it does not induce capacitive or resistive leakage between the oscillator pins.

(2) When XT1BYPASS is set, XT1 circuits are automatically powered down. Input signal is a digital square wave with parametrics defined in the Schmitt-trigger Inputs section of this data sheet.

(3) Maximum frequency of operation of the entire device cannot be exceeded.

(4) Oscillation allowance is based on a safety factor of 5 for recommended crystals. The oscillation allowance is a function of the XT1DRIVEx settings and the effective load. In general, comparable oscillator allowance can be achieved based on the following guidelines, but should be evaluated based on the actual crystal selected for the application:
- For XT1DRIVEx = 0, $C_{L,eff} \le 6$ pF.
- For XT1DRIVEx = 1, 6 pF $\le C_{L,eff} \le$ 9 pF.
- For XT1DRIVEx = 2, 6 pF $\le C_{L,eff} \le$ 10 pF.
- For XT1DRIVEx = 3, $C_{L,eff} \ge 6$ pF.

(5) Includes parasitic bond and package capacitance (approximately 2 pF per pin).
Because the PCB adds additional capacitance, verify the correct load by measuring the ACLK frequency. For a correct setup, the effective load capacitance should always match the specification of the used crystal.

(6) Requires external capacitors at both terminals. Values are specified by crystal manufacturers.

(7) Frequencies below the MIN specification set the fault flag. Frequencies above the MAX specification do not set the fault flag. Frequencies in between might set the flag.

(8) Measured with logic-level input frequency but also applies to operation with crystals.

Table 5-3 lists the characteristics of the VLO.

Table 5-3. Internal Very-Low-Power Low-Frequency Oscillator (VLO)

over recommended ranges of supply voltage and operating free-air temperature (unless otherwise noted)

PARAMETER		TEST CONDITIONS	V_{CC}	MIN	TYP	MAX	UNIT
f_{VLO}	VLO frequency	Measured at ACLK	1.8 V to 3.6 V	6	9.6	15	kHz
df_{VLO}/d_T	VLO frequency temperature drift	Measured at ACLK	1.8 V to 3.6 V		0.5		%/°C
df_{VLO}/dV_{CC}	VLO frequency supply voltage drift	Measured at ACLK	1.8 V to 3.6 V		4		%/V
	Duty cycle	Measured at ACLK	1.8 V to 3.6 V	40%	50%	60%	

Table 5-4 lists the characteristics of the REFO.

Table 5-4. Internal Reference, Low-Frequency Oscillator (REFO)

over recommended ranges of supply voltage and operating free-air temperature (unless otherwise noted)

PARAMETER		TEST CONDITIONS	V_{CC}	MIN	TYP	MAX	UNIT
I_{REFO}	REFO oscillator current consumption	T_A = 25°C	1.8 V to 3.6 V		3		µA
f_{REFO}	REFO frequency calibrated	Measured at ACLK	1.8 V to 3.6 V		32768		Hz
	REFO absolute tolerance calibrated	Full temperature range	1.8 V to 3.6 V	–3.5%		+3.5%	
		T_A = 25°C	3 V	–1.5%		+1.5%	
df_{REFO}/d_T	REFO frequency temperature drift	Measured at ACLK	1.8 V to 3.6 V		0.01		%/°C
df_{REFO}/dV_{CC}	REFO frequency supply voltage drift	Measured at ACLK	1.8 V to 3.6 V		1.0		%/V
	Duty cycle	Measured at ACLK	1.8 V to 3.6 V	40%	50%	60%	
t_{START}	REFO start-up time	40%/60% duty cycle	1.8 V to 3.6 V		25		µs

Copyright © 2014–2018, Texas Instruments Incorporated

Table 5-5 lists the frequency characteristics of the DCO.

Table 5-5. DCO Frequency

over recommended ranges of supply voltage and operating free-air temperature (unless otherwise noted) (see Figure 5-2)

PARAMETER		TEST CONDITIONS	MIN	TYP	MAX	UNIT
$f_{DCO(0,0)}$	DCO frequency (0, 0)(1)	DCORSELx = 0, DCOx = 0, MODx = 0	0.07		0.20	MHz
$f_{DCO(0,31)}$	DCO frequency (0, 31)(1)	DCORSELx = 0, DCOx = 31, MODx = 0	0.70		1.70	MHz
$f_{DCO(1,0)}$	DCO frequency (1, 0)(1)	DCORSELx = 1, DCOx = 0, MODx = 0	0.15		0.36	MHz
$f_{DCO(1,31)}$	DCO frequency (1, 31)(1)	DCORSELx = 1, DCOx = 31, MODx = 0	1.47		3.45	MHz
$f_{DCO(2,0)}$	DCO frequency (2, 0)(1)	DCORSELx = 2, DCOx = 0, MODx = 0	0.32		0.75	MHz
$f_{DCO(2,31)}$	DCO frequency (2, 31)(1)	DCORSELx = 2, DCOx = 31, MODx = 0	3.17		7.38	MHz
$f_{DCO(3,0)}$	DCO frequency (3, 0)(1)	DCORSELx = 3, DCOx = 0, MODx = 0	0.64		1.51	MHz
$f_{DCO(3,31)}$	DCO frequency (3, 31)(1)	DCORSELx = 3, DCOx = 31, MODx = 0	6.07		14.0	MHz
$f_{DCO(4,0)}$	DCO frequency (4, 0)(1)	DCORSELx = 4, DCOx = 0, MODx = 0	1.3		3.2	MHz
$f_{DCO(4,31)}$	DCO frequency (4, 31)(1)	DCORSELx = 4, DCOx = 31, MODx = 0	12.3		28.2	MHz
$f_{DCO(5,0)}$	DCO frequency (5, 0)(1)	DCORSELx = 5, DCOx = 0, MODx = 0	2.5		6.0	MHz
$f_{DCO(5,31)}$	DCO frequency (5, 31)(1)	DCORSELx = 5, DCOx = 31, MODx = 0	23.7		54.1	MHz
$f_{DCO(6,0)}$	DCO frequency (6, 0)(1)	DCORSELx = 6, DCOx = 0, MODx = 0	4.6		10.7	MHz
$f_{DCO(6,31)}$	DCO frequency (6, 31)(1)	DCORSELx = 6, DCOx = 31, MODx = 0	39.0		88.0	MHz
$f_{DCO(7,0)}$	DCO frequency (7, 0)(1)	DCORSELx = 7, DCOx = 0, MODx = 0	8.5		19.6	MHz
$f_{DCO(7,31)}$	DCO frequency (7, 31)(1)	DCORSELx = 7, DCOx = 31, MODx = 0	60		135	MHz
$S_{DCORSEL}$	Frequency step between range DCORSEL and DCORSEL + 1	$S_{RSEL} = f_{DCO(DCORSEL+1,DCO)}/f_{DCO(DCORSEL,DCO)}$	1.2		2.3	ratio
S_{DCO}	Frequency step between tap DCO and DCO + 1	$S_{DCO} = f_{DCO(DCORSEL,DCO+1)}/f_{DCO(DCORSEL,DCO)}$	1.02		1.12	ratio
	Duty cycle	Measured at SMCLK	40%	50%	60%	
df_{DCO}/dT	DCO frequency temperature drift	f_{DCO} = 1 MHz		0.1		%/°C
df_{DCO}/dV_{CORE}	DCO frequency voltage drift	f_{DCO} = 1 MHz		1.9		%/V

(1) When selecting the proper DCO frequency range (DCORSELx), the target DCO frequency, f_{DCO}, should be set to reside within the range of $f_{DCO(n,\ 0),MAX} \le f_{DCO} \le f_{DCO(n,\ 31),MIN}$, where $f_{DCO(n,\ 0),MAX}$ represents the maximum frequency specified for the DCO frequency, range n, tap 0 (DCOx = 0) and $f_{DCO(n,31),MIN}$ represents the minimum frequency specified for the DCO frequency, range n, tap 31 (DCOx = 31). This ensures that the target DCO frequency resides within the range selected. It should also be noted that if the actual f_{DCO} frequency for the selected range causes the FLL or the application to select tap 0 or 31, the DCO fault flag is set to report that the selected range is at its minimum or maximum tap setting.

Figure 5-2. Typical DCO Frequency

5.9 Digital I/Os

Table 5-6 lists the input characteristics of the Schmitt-trigger GPIOs.

Table 5-6. Schmitt-Trigger Inputs – General-Purpose I/O

over recommended ranges of supply voltage and operating free-air temperature (unless otherwise noted)

PARAMETER		TEST CONDITIONS	V_{CC}	MIN	TYP	MAX	UNIT
V_{IT+}	Positive-going input threshold voltage		1.8 V	0.80		1.40	V
			3 V	1.50		2.10	
V_{IT-}	Negative-going input threshold voltage		1.8 V	0.45		1.00	V
			3 V	0.75		1.65	
V_{hys}	Input voltage hysteresis ($V_{IT+} – V_{IT-}$)		1.8 V	0.3		0.85	V
			3 V	0.4		1.0	
R_{Pull}	Pullup or pulldown resistor	For pullup: $V_{IN} = V_{SS}$, For pulldown: $V_{IN} = V_{CC}$		20	35	50	kΩ
C_I	Input capacitance	$V_{IN} = V_{SS}$ or V_{CC}			5		pF

Table 5-7 lists the input characteristics of the GPIOs.

Table 5-7. Inputs – Ports P1 and P2 (1)

over recommended ranges of supply voltage and operating free-air temperature (unless otherwise noted)

PARAMETER		TEST CONDITIONS	V_{CC}	MIN	MAX	UNIT
$t_{(int)}$	External interrupt timing (2)	Port P1, P2: P1.x to P2.x, External trigger pulse duration to set interrupt flag	2.2 V, 3 V	20		ns

(1) Some devices may contain additional ports with interrupts. See the block diagram and terminal function descriptions.
(2) An external signal sets the interrupt flag every time the minimum interrupt pulse duration $t_{(int)}$ is met. It may be set by trigger signals shorter than $t_{(int)}$.

Table 5-8 lists the leakage characteristics of the GPIOs.

Table 5-8. Leakage Current – General-Purpose I/O

over recommended ranges of supply voltage and operating free-air temperature (unless otherwise noted)

PARAMETER		TEST CONDITIONS	V_{CC}	MIN	MAX	UNIT
$I_{lkg(Px.y)}$	High-impedance leakage current	(1) (2)	1.8 V, 3 V	–50	+50	nA

(1) The leakage current is measured with V_{SS} or V_{CC} applied to the corresponding pins, unless otherwise noted.
(2) The leakage of the digital port pins is measured individually. The port pin is selected for input and the pullup or pulldown resistor is disabled.

Copyright © 2014–2018, Texas Instruments Incorporated

Table 5-9 lists the output characteristics of the GPIOs in full drive strength mode.

Table 5-9. Outputs – General-Purpose I/O (Full Drive Strength)

over recommended ranges of supply voltage and operating free-air temperature (unless otherwise noted) (see Section 5.9.2)

PARAMETER		TEST CONDITIONS	V_{CC}	MIN	MAX	UNIT
V_{OH}	High-level output voltage	$I_{(OHmax)}$ = –3 mA (1)	1.8 V	1.55	1.80	V
		$I_{(OHmax)}$ = –10 mA (1)		1.20	1.80	
		$I_{(OHmax)}$ = –5 mA (1)	3 V	2.75	3.00	
		$I_{(OHmax)}$ = –15 mA (1)		2.40	3.00	
V_{OL}	Low-level output voltage	$I_{(OLmax)}$ = 3 mA (2)	1.8 V	0.00	0.25	V
		$I_{(OLmax)}$ = 10 mA (3)		0.00	0.60	
		$I_{(OLmax)}$ = 5 mA (2)	3 V	0.00	0.25	
		$I_{(OLmax)}$ = 15 mA (3)		0.00	0.60	

(1) The maximum total current, $I_{(OHmax)}$, for all outputs combined should not exceed ±20 mA to hold the maximum voltage drop specified. See Section 5.3 for more details.
(2) The maximum total current, $I_{(OLmax)}$, for all outputs combined should not exceed ±48 mA to hold the maximum voltage drop specified.
(3) The maximum total current, $I_{(OLmax)}$, for all outputs combined should not exceed ±100 mA to hold the maximum voltage drop specified.

Table 5-10 lists the output characteristics of the GPIOs in reduced drive strength mode.

Table 5-10. Outputs – General-Purpose I/O (Reduced Drive Strength)

over recommended ranges of supply voltage and operating free-air temperature (unless otherwise noted) (1) (see Section 5.9.1)

PARAMETER		TEST CONDITIONS	V_{CC}	MIN	MAX	UNIT
V_{OH}	High-level output voltage	$I_{(OHmax)}$ = –1 mA (2)	1.8 V	1.55	1.80	V
		$I_{(OHmax)}$ = –3 mA (2)		1.20	1.80	
		$I_{(OHmax)}$ = –2 mA (2)	3 V	2.75	3.00	
		$I_{(OHmax)}$ = –6 mA (2)		2.40	3.00	
V_{OL}	Low-level output voltage	$I_{(OLmax)}$ = 1 mA (3)	1.8 V	0.00	0.25	V
		$I_{(OLmax)}$ = 3 mA (4)		0.00	0.60	
		$I_{(OLmax)}$ = 2 mA (3)	3 V	0.00	0.25	
		$I_{(OLmax)}$ = 6 mA (4)		0.00	0.60	

(1) Selecting reduced drive strength may reduce EMI.
(2) The maximum total current, $I_{(OHmax)}$, for all outputs combined should not exceed ±20 mA to hold the maximum voltage drop specified. See Section 5.3 for more details.
(3) The maximum total current, $I_{(OLmax)}$, for all outputs combined, should not exceed ±48 mA to hold the maximum voltage drop specified.
(4) The maximum total current, $I_{(OLmax)}$, for all outputs combined, should not exceed ±100 mA to hold the maximum voltage drop specified.

Table 5-11 lists the output frequency of the GPIOs.

Table 5-11. Output Frequency – General-Purpose I/O

over recommended ranges of supply voltage and operating free-air temperature (unless otherwise noted)

PARAMETER		TEST CONDITIONS		MIN	MAX	UNIT
$f_{Px.y}$	Port output frequency (with load)	See (1) (2)	V_{CC} = 1.8 V, PMMCOREVx = 0		16	MHz
			V_{CC} = 3 V, PMMCOREVx = 3		25	
f_{Port_CLK}	Clock output frequency	ACLK SMCLK MCLK C_L = 20 pF (2)	V_{CC} = 1.8 V, PMMCOREVx = 0		16	MHz
			V_{CC} = 3 V, PMMCOREVx = 3		25	

(1) A resistive divider with 2 × R1 between V_{CC} and V_{SS} is used as load. The output is connected to the center tap of the divider. For full drive strength, R1 = 550 Ω. For reduced drive strength, R1 = 1.6 kΩ. C_L = 20 pF is connected to the output to V_{SS}.
(2) The output voltage reaches at least 10% and 90% V_{CC} at the specified toggle frequency.

Copyright © 2014–2018, Texas Instruments Incorporated

5.9.1 Typical Characteristics – Outputs, Reduced Drive Strength (PxDS.y = 0)

over recommended ranges of supply voltage and operating free-air temperature (unless otherwise noted)

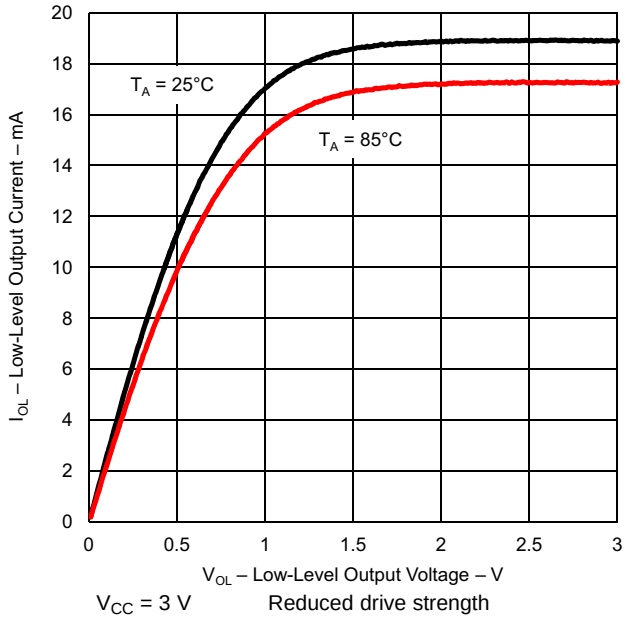

Figure 5-3. Typical Low-Level Output Current vs Low-Level Output Voltage

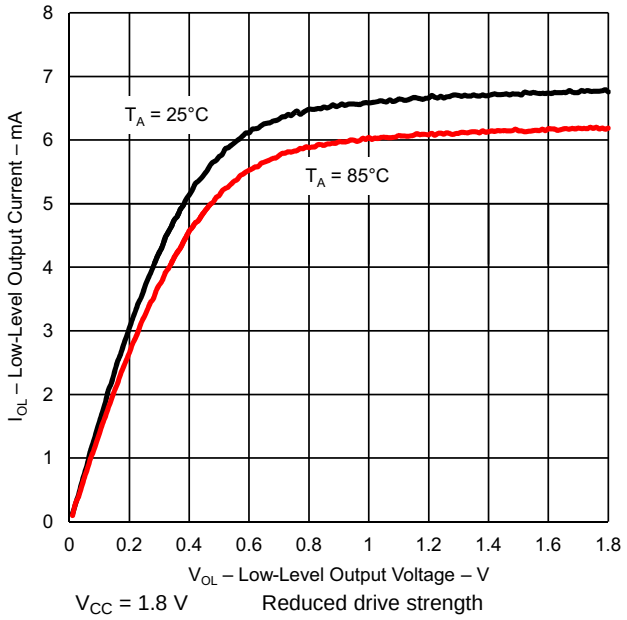

Figure 5-4. Typical Low-Level Output Current vs Low-Level Output Voltage

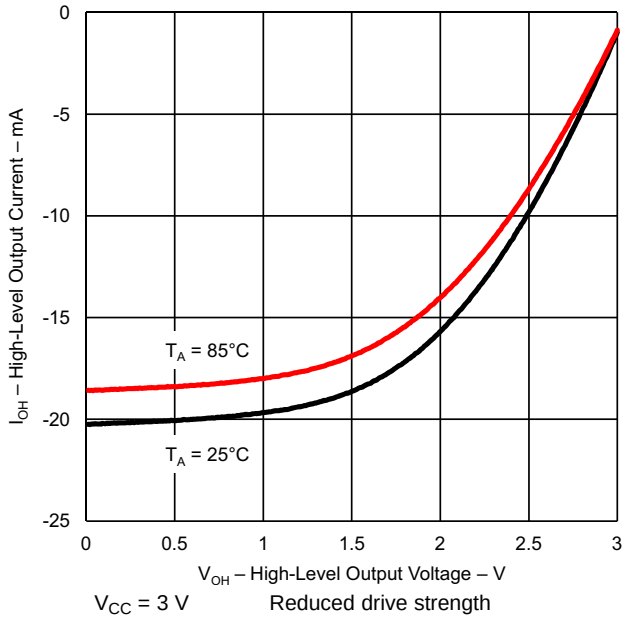

Figure 5-5. Typical High-Level Output Current vs High-Level Output Voltage

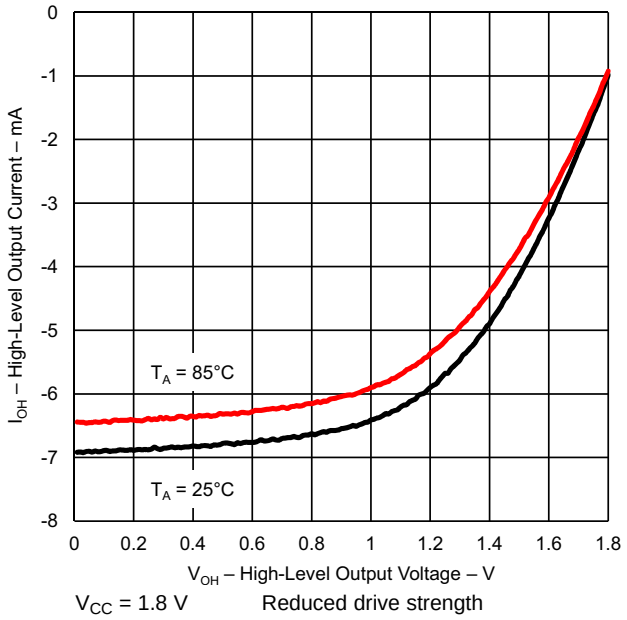

Figure 5-6. Typical High-Level Output Current vs High-Level Output Voltage

Copyright © 2014–2018, Texas Instruments Incorporated

5.9.2 Typical Characteristics – Outputs, Full Drive Strength (PxDS.y = 1)

over recommended ranges of supply voltage and operating free-air temperature (unless otherwise noted)

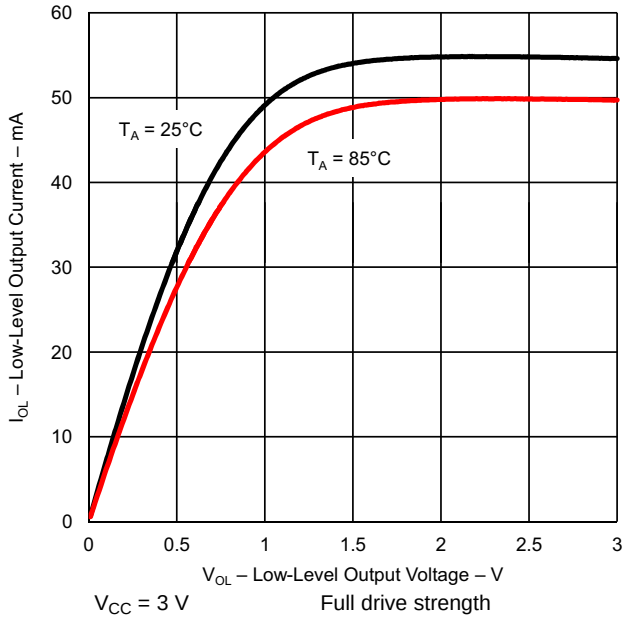

Figure 5-7. Typical Low-Level Output Current vs Low-Level Output Voltage

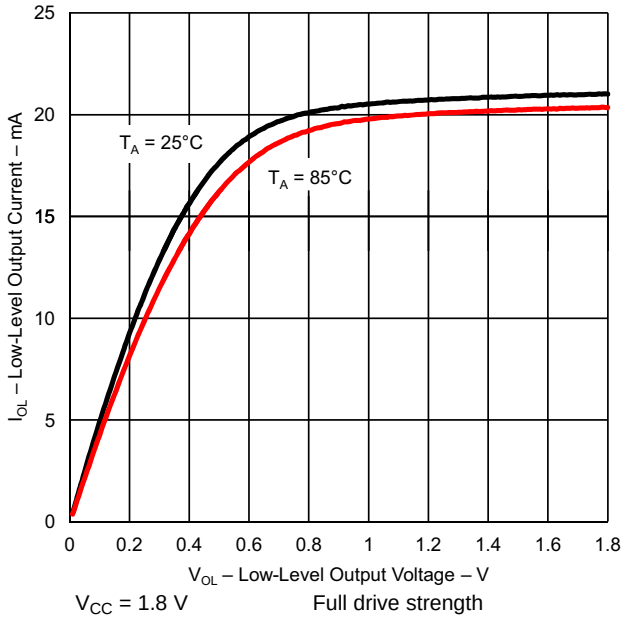

Figure 5-8. Typical Low-Level Output Current vs Low-Level Output Voltage

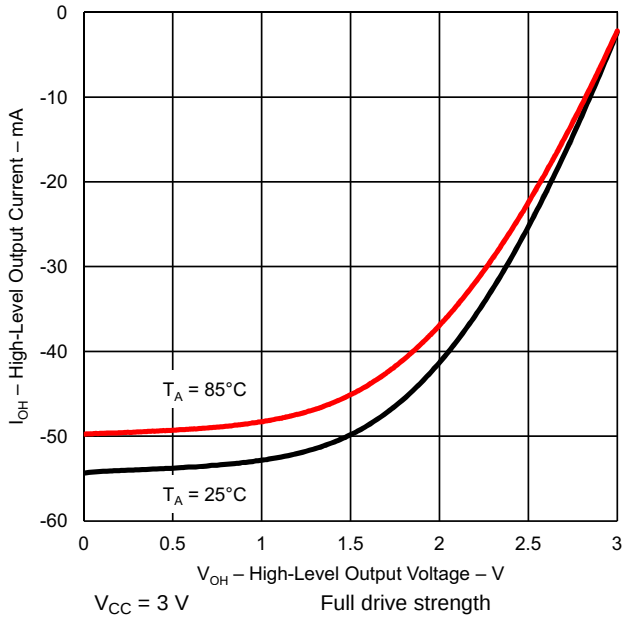

Figure 5-9. Typical High-Level Output Current vs High-Level Output Voltage

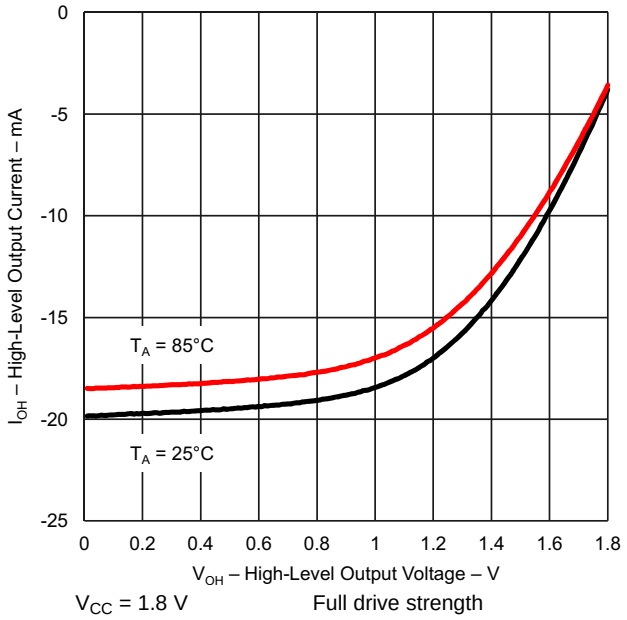

Figure 5-10. Typical High-Level Output Current vs High-Level Output Voltage

5.10 Power-Management Module (PMM)

Table 5-12 lists the characteristics of the BOR.

Table 5-12. PMM, Brownout Reset (BOR)

over recommended ranges of supply voltage and operating free-air temperature (unless otherwise noted)

PARAMETER		TEST CONDITIONS	MIN	TYP	MAX	UNIT
$V_{(DVCC_BOR_IT-)}$	BOR_H on voltage, DV_{CC} falling level	$\lvert dDV_{CC}/d_t \rvert < 3$ V/s			1.45	V
$V_{(DVCC_BOR_IT+)}$	BOR_H off voltage, DV_{CC} rising level	$\lvert dDV_{CC}/d_t \rvert < 3$ V/s	0.80	1.20	1.50	V
$V_{(DVCC_BOR_hys)}$	BOR_H hysteresis		50		250	mV
t_{RESET}	Pulse duration required at $\overline{RST}$/NMI pin to accept a reset		2			µs

Table 5-13 lists the core voltage characteristics of the PMM.

Table 5-13. PMM, Core Voltage

over recommended ranges of supply voltage and operating free-air temperature (unless otherwise noted)

PARAMETER		TEST CONDITIONS	MIN	TYP	MAX	UNIT
V_{CORE3}(AM)	Core voltage, active mode, PMMCOREV = 3	2.4 V ≤ DV_{CC} ≤ 3.6 V		1.91		V
V_{CORE2}(AM)	Core voltage, active mode, PMMCOREV = 2	2.2 V ≤ DV_{CC} ≤ 3.6 V		1.81		V
V_{CORE1}(AM)	Core voltage, active mode, PMMCOREV = 1	2 V ≤ DV_{CC} ≤ 3.6 V		1.61		V
V_{CORE0}(AM)	Core voltage, active mode, PMMCOREV = 0	1.8 V ≤ DV_{CC} ≤ 3.6 V		1.41		V
V_{CORE3}(LPM)	Core voltage, low-current mode, PMMCOREV = 3	2.4 V ≤ DV_{CC} ≤ 3.6 V		1.94		V
V_{CORE2}(LPM)	Core voltage, low-current mode, PMMCOREV = 2	2.2 V ≤ DV_{CC} ≤ 3.6 V		1.92		V
V_{CORE1}(LPM)	Core voltage, low-current mode, PMMCOREV = 1	2 V ≤ DV_{CC} ≤ 3.6 V		1.73		V
V_{CORE0}(LPM)	Core voltage, low-current mode, PMMCOREV = 0	1.8 V ≤ DV_{CC} ≤ 3.6 V		1.52		V

Table 5-14 lists the characteristics of the high-side SVS.

Table 5-14. PMM, SVS High Side

over recommended ranges of supply voltage and operating free-air temperature (unless otherwise noted)

PARAMETER		TEST CONDITIONS	MIN	TYP	MAX	UNIT
$I_{(SVSH)}$	SVS current consumption	SVSHE = 0, DV_{CC} = 3.6 V		0		nA
		SVSHE = 1, DV_{CC} = 3.6 V, SVSHFP = 0		200		nA
		SVSHE = 1, DV_{CC} = 3.6 V, SVSHFP = 1		1.5		µA
$V_{(SVSH_IT-)}$	SVS_H on voltage level	SVSHE = 1, SVSHRVL = 0	1.60	1.65	1.75	V
		SVSHE = 1, SVSHRVL = 1	1.77	1.84	1.95	V
		SVSHE = 1, SVSHRVL = 2	1.93	2.00	2.12	V
		SVSHE = 1, SVSHRVL = 3	2.09	2.16	2.29	V
$V_{(SVSH_IT+)}$	SVS_H off voltage level	SVSHE = 1, SVSMHRRL = 0	1.65	1.75	1.85	V
		SVSHE = 1, SVSMHRRL = 1	1.85	1.95	2.05	V
		SVSHE = 1, SVSMHRRL = 2	2.05	2.15	2.25	V
		SVSHE = 1, SVSMHRRL = 3	2.15	2.25	2.35	V
		SVSHE = 1, SVSMHRRL = 4	2.30	2.40	2.55	V
		SVSHE = 1, SVSMHRRL = 5	2.57	2.70	2.83	V
		SVSHE = 1, SVSMHRRL = 6	2.90	3.05	3.20	V
		SVSHE = 1, SVSMHRRL = 7	2.90	3.05	3.20	V
$t_{pd(SVSH)}$	SVS_H propagation delay	SVSHE = 1, dV_{DVCC}/dt = 10 mV/µs, SVSHFP = 1		2.5		µs
		SVSHE = 1, dV_{DVCC}/dt = 1 mV/µs, SVSHFP = 0		20		µs
$t_{(SVSH)}$	SVS_H on or off delay time	SVSHE = 0 → 1, dV_{DVCC}/dt = 10 mV/µs, SVSHFP = 1		12.5		µs
		SVSHE = 0 → 1, dV_{DVCC}/dt = 1 mV/µs, SVSHFP = 0		100		µs
dV_{DVCC}/dt	DVCC rise time		0		1000	V/s

Copyright © 2014–2018, Texas Instruments Incorporated

Table 5-15 lists the characteristics of the high-side SVM.

Table 5-15. PMM, SVM High Side

over recommended ranges of supply voltage and operating free-air temperature (unless otherwise noted)

PARAMETER		TEST CONDITIONS	MIN	TYP	MAX	UNIT
$I_{(SVMH)}$	SVM_H current consumption	SVMHE = 0, DV_{CC} = 3.6 V		0		nA
		SVMHE = 1, DV_{CC} = 3.6 V, SVMHFP = 0		200		
		SVMHE = 1, DV_{CC} = 3.6 V, SVMHFP = 1		1.5		µA
$V_{(SVMH)}$	SVM_H on or off voltage level(1)	SVMHE = 1, SVSMHRRL = 0	1.63	1.73	1.83	V
		SVMHE = 1, SVSMHRRL = 1	1.83	1.93	2.03	
		SVMHE = 1, SVSMHRRL = 2	2.03	2.13	2.23	
		SVMHE = 1, SVSMHRRL = 3	2.13	2.23	2.33	
		SVMHE = 1, SVSMHRRL = 4	2.28	2.40	2.53	
		SVMHE = 1, SVSMHRRL = 5	2.55	2.70	2.81	
		SVMHE = 1, SVSMHRRL = 6	2.88	3.02	3.18	
		SVMHE = 1, SVSMHRRL = 7	2.88	3.02	3.18	
		SVMHE = 1, SVMHOVPE = 1		3.77		
$t_{pd(SVMH)}$	SVM_H propagation delay	SVMHE = 1, dV_{DVCC}/dt = 10 mV/µs, SVMHFP = 1		2.5		µs
		SVMHE = 1, dV_{DVCC}/dt = 1 mV/µs, SVMHFP = 0		20		
$t_{(SVMH)}$	SVM_H on or off delay time	SVMHE = 0 → 1, dV_{DVCC}/dt = 10 mV/µs, SVMHFP = 1		12.5		µs
		SVMHE = 0 → 1, dV_{DVCC}/dt = 1 mV/µs, SVMHFP = 0		100		

(1) The SVM_H settings available depend on the VCORE (PMMCOREVx) setting. See the *Power Management Module and Supply Voltage Supervisor* chapter in the *MSP430x5xx and MSP430x6xx Family User's Guide* on recommended settings and use.

Table 5-16 lists the characteristics of the low-side SVS.

Table 5-16. PMM, SVS Low Side

over recommended ranges of supply voltage and operating free-air temperature (unless otherwise noted)

PARAMETER		TEST CONDITIONS	MIN	TYP	MAX	UNIT
$I_{(SVSL)}$	SVS_L current consumption	SVSLE = 0, PMMCOREV = 2		0		nA
		SVSLE = 1, PMMCOREV = 2, SVSLFP = 0		200		
		SVSLE = 1, PMMCOREV = 2, SVSLFP = 1		1.5		µA
$t_{pd(SVSL)}$	SVS_L propagation delay	SVSLE = 1, dV_{CORE}/dt = 10 mV/µs, SVSLFP = 1		2.5		µs
		SVSLE = 1, dV_{CORE}/dt = 1 mV/µs, SVSLFP = 0		20		
$t_{(SVSL)}$	SVS_L on or off delay time	SVSLE = 0 → 1, dV_{CORE}/dt = 10 mV/µs, SVSLFP = 1		12.5		µs
		SVSLE = 0 → 1, dV_{CORE}/dt = 1 mV/µs, SVSLFP = 0		100		

Table 5-17 lists the characteristics of the low-side SVM.

Table 5-17. PMM, SVM Low Side

over recommended ranges of supply voltage and operating free-air temperature (unless otherwise noted)

PARAMETER		TEST CONDITIONS	MIN	TYP	MAX	UNIT
$I_{(SVML)}$	SVM_L current consumption	SVMLE = 0, PMMCOREV = 2		0		nA
		SVMLE = 1, PMMCOREV = 2, SVMLFP = 0		200		
		SVMLE = 1, PMMCOREV = 2, SVMLFP = 1		1.5		µA
$t_{pd(SVML)}$	SVM_L propagation delay	SVMLE = 1, dV_{CORE}/dt = 10 mV/µs, SVMLFP = 1		2.5		µs
		SVMLE = 1, dV_{CORE}/dt = 1 mV/µs, SVMLFP = 0		20		
$t_{(SVML)}$	SVM_L on or off delay time	SVMLE = 0 → 1, dV_{CORE}/dt = 10 mV/µs, SVMLFP = 1		12.5		µs
		SVMLE = 0 → 1, dV_{CORE}/dt = 1 mV/µs, SVMLFP = 0		100		

5.11 Auxiliary Supplies

Table 5-18 lists the recommended operating conditions of the auxiliary supplies.

Table 5-18. Auxiliary Supplies, Recommended Operating Conditions

over operating free-air temperature range (unless otherwise noted)

			MIN	NOM	MAX	UNIT
V_{CC}	Supply voltage range for all supplies at pins DVCC, AVCC, AUXVCC1, AUXVCC2, AUXVCC3		1.8		3.6	V
V_{DSYS}	Digital system supply voltage range, $V_{DSYS} = V_{CC} – R_{ON} × I_{LOAD}$	PMMCOREVx = 0	1.8		3.6	V
		PMMCOREVx = 1	2.0		3.6	
		PMMCOREVx = 2	2.2		3.6	
		PMMCOREVx = 3	2.4		3.6	
V_{ASYS}	Analog system supply voltage range, $V_{ASYS} = V_{CC} – R_{ON} × I_{LOAD}$		See module specifications			V
T_A	Ambient temperature range		–40		85	°C
$T_{A,HTOL}$	Ambient temperature during HTOL (module should be functional during HTOL)				150	°C
C_{VCC},$C_{AUX1/2}$	Recommended capacitor at pins DVCC, AVCC, AUXVCC1, AUXVCC2			4.7		µF
C_{VSYS}	Recommended capacitor at pins VDSYS1, VDSYS2 and VASYS1, VASYS2			4.7		µF
C_{VCORE}	Recommended capacitance at pin VCORE			0.47		µF
C_{AUX3}	Recommended capacitor at pin AUXVCC3			0.47		µF

Table 5-19 lists the current consumption of the backup subsystem.

Table 5-19. Auxiliary Supplies, AUXVCC3 (Backup Subsystem) Currents

over operating free-air temperature range (unless otherwise noted)

PARAMETER		TEST CONDITIONS	V_{CC}	T_A	MIN	MAX	UNIT
$I_{AUX3,RTCon}$	AUXVCC3 current with RTC enabled	RTC and 32-kHz oscillator in backup subsystem enabled	3 V	25°C		0.86	µA
				85°C		1.2	
$I_{AUX3,RTCoff}$	AUXVCC3 current with RTC disabled	RTC and 32-kHz oscillator in backup subsystem disabled	3 V	25°C		120	nA
				85°C		220	

Copyright © 2014–2018, Texas Instruments Incorporated

Table 5-20 lists the characteristics of the auxiliary supply monitor.

Table 5-20. Auxiliary Supplies, Auxiliary Supply Monitor

over operating free-air temperature range (unless otherwise noted)

PARAMETER		TEST CONDITIONS	MIN	TYP	MAX	UNIT
$I_{CC,Monitor}$	Average supply current for monitoring circuitry drawn from VDSYS	LOCKAUX = 0, AUXMRx = 0 AUX0MD = 0, AUX1MD = 0, AUX2MD = 1, VDSYS = DVCC, VASYS = AVCC, Current measured at VDSYS			1.10	µA
$I_{Meas,Montior}$	Average current drawn from monitored supply during measurement cycle	LOCKAUX = 0, AUXMRx = 0 AUX0MD = 0, AUX1MD = 0, AUX2MD = 1, VDSYS = DVCC, VASYS = AVCC, Current measured at AUXVCC1			0.13	µA
$V_{Monitor}$	Auxiliary supply threshold level (same as high-side SVM)	General	V_{SVMH} (SVSMHRRL x = AUXLVLx) X – 5%	V_{SVMH} (SVSMHRRL x = AUXLVLx)	V_{SVMH} (SVSMHRRLx = AUXLVLx) X + 5%	V
		AUXLVLx = 0	1.65	1.75	1.85	
		AUXLVLx = 1	1.85	1.95	2.05	
		AUXLVLx = 2	2.05	2.15	2.25	
		AUXLVLx = 3	2.15	2.25	2.35	
		AUXLVLx = 4	2.30	2.40	2.55	
		AUXLVLx = 5	2.57	2.70	2.83	
		AUXLVLx = 6	2.90	3.00	3.20	
		AUXLVLx = 7	2.90	3.00	3.20	

Table 5-21 lists the ON-resistance characteristics of the switches.

Table 5-21. Auxiliary Supplies, Switch ON-Resistance

over operating free-air temperature range (unless otherwise noted)

PARAMETER		TEST CONDITIONS	MIN	MAX	UNIT
$R_{ON,DVCC}$	ON-resistance of switch between DVCC and VDSYS	$I_{LOAD} = I_{CORE} + I_{IO}$ = 10 mA + 10 mA = 20 mA		5	Ω
$R_{ON,DAUX1}$	ON-resistance of switch between AUXVCC1 and VDSYS	$I_{LOAD} = I_{CORE} + I_{IO}$ = 10 mA + 10 mA = 20 mA		5	Ω
$R_{ON,DAUX2}$	ON-resistance of switch between AUXVCC2 and VDSYS	$I_{LOAD} = I_{CORE} + I_{IO}$ = 10 mA + 10 mA = 20 mA		5	Ω
$R_{ON,AVCC}$	ON-resistance of switch between AVCC and V_{ASYS}	$I_{LOAD} = I_{Modules}$ = 10 mA		5	Ω
$R_{ON,AAUX1}$	ON-resistance of switch between AUXVCC1 and VASYS	$I_{LOAD} = I_{Modules}$ = 5 mA		20	Ω
$R_{ON,AAUX2}$	ON-resistance of switch between AUXVCC2 and VASYS	$I_{LOAD} = I_{Modules}$ = 5 mA		20	Ω

Copyright © 2014–2018, Texas Instruments Incorporated

Table 5-22 lists the switching times of the auxiliary supplies.

Table 5-22. Auxiliary Supplies, Switching Time

over operating free-air temperature range (unless otherwise noted)

PARAMETER		MIN	MAX	UNIT
t_{Switch}	Time from occurrence of trigger (SVM or software) to "new" supply connected to system supplies		100	ns
$t_{Recover}$	"Recovery time" after a switch over takes place. During this time, another switch cannot occur.	170	480	µs

Table 5-23 lists the leakage characteristics of the switch.

Table 5-23. Auxiliary Supplies, Switch Leakage

over operating free-air temperature range (unless otherwise noted)

PARAMETER		TEST CONDITIONS	MIN	TYP	MAX	UNIT
$I_{SW,Lkg}$	Current into DVCC, AVCC, AUXVCC1, or AUXVCC2 if not selected	Per supply (but not the highest supply)		75	250	nA
I_{Vmax}	Current drawn from highest supply			500	700	nA

Table 5-24 lists the characteristics of the auxiliary supplies to the ADC.

Table 5-24. Auxiliary Supplies, Auxiliary Supplies to ADC10_A

over operating free-air temperature range (unless otherwise noted)

PARAMETER		TEST CONDITIONS		V_{CC}	MIN	TYP	MAX	UNIT
V_3	Supply voltage divider $V_3 = V_{Supply} / 3$			1.8 V	0.57	0.6	0.63	V
				3 V	0.95	1.0	1.05	
				3.6 V	1.14	1.2	1.26	
R_{V3}	Load resistance	AUXADCRx = 0					15	kΩ
		AUXADCRx = 1					1.5	
		AUXADCRx = 2					0.6	
$t_{Sample,V3}$	Sampling time required if V_3 is selected	Error of conversion result ≤ 1 LSB	AUXADCRx = 0		1000			ns
			AUXADCRx = 1		1000			
			AUXADCRx = 2		1000			

Table 5-25 lists the characteristics of the charge limiting resistor.

Table 5-25. Auxiliary Supplies, Charge Limiting Resistor

over operating free-air temperature range (unless otherwise noted)

PARAMETER		TEST CONDITIONS	V_{CC}	MIN	TYP	MAX	UNIT
R_{CHARGE}	Charge limiting resistor	AUXCHCx = 1	3 V			5	kΩ
		AUXCHCx = 2				10	
		AUXCHCx = 3				20	

Copyright © 2014–2018, Texas Instruments Incorporated

5.12 Timer_A

Table 5-26 lists the characteristics of the Timer_A.

Table 5-26. Timer_A

over recommended ranges of supply voltage and operating free-air temperature (unless otherwise noted)

PARAMETER		TEST CONDITIONS	V_{CC}	MIN	MAX	UNIT
f_{TA}	Timer_A input clock frequency	Internal: SMCLK or ACLK, External: TACLK, Duty cycle = 50% ±10%	1.8 V, 3 V		25	MHz
$t_{TA,cap}$	Timer_A capture timing	All capture inputs, Minimum pulse duration required for capture	1.8 V, 3 V	20		ns

5.13 eUSCI

Table 5-27 lists the supported clock frequencies of the eUSCI in UART mode.

Table 5-27. eUSCI (UART Mode) Clock Frequency

PARAMETER		TEST CONDITIONS	MIN	MAX	UNIT
f_{eUSCI}	eUSCI input clock frequency	Internal: SMCLK or ACLK, External: UCLK, Duty cycle = 50% ±10%		f_{SYSTEM}	MHz
f_{BITCLK}	BITCLK clock frequency (equals baud rate in MBaud)			5	MHz

Table 5-28 lists the switching characteristics of the eUSCI in UART mode.

Table 5-28. eUSCI (UART Mode) Switching Characteristics

over recommended ranges of supply voltage and operating free-air temperature (unless otherwise noted)

PARAMETER		TEST CONDITIONS	V_{CC}	MIN	TYP	MAX	UNIT
t_t	UART receive deglitch time (1)	UCGLITx = 0	2 V, 3 V	10	15	25	ns
		UCGLITx = 1		30	50	85	
		UCGLITx = 2		50	80	150	
		UCGLITx = 3		70	120	200	

(1) Pulses on the UART receive input (UCxRX) shorter than the UART receive deglitch time are suppressed. To make sure that pulses are correctly recognized, their duration should exceed the maximum specification of the deglitch time.

Table 5-29 lists the supported clock frequencies of the eUSCI in SPI master mode.

Table 5-29. eUSCI (SPI Master Mode) Clock Frequency

PARAMETER		TEST CONDITIONS	MIN	MAX	UNIT
f_{eUSCI}	eUSCI input clock frequency	Internal: SMCLK or ACLK, Duty cycle = 50% ±10%		f_{SYSTEM}	MHz

Table 5-30 lists the switching characteristics of the eUSCI in SPI master mode.

Table 5-30. eUSCI (SPI Master Mode) Switching Characteristics

over recommended ranges of supply voltage and operating free-air temperature (unless otherwise noted)(1)

PARAMETER		TEST CONDITIONS	V_{CC}	MIN	MAX	UNIT
$t_{STE,LEAD}$	STE lead time, STE low to clock	UCSTEM = 0, UCMODEx = 01 or 10	2 V, 3 V	150		ns
		UCSTEM = 1, UCMODEx = 01 or 10		150		
$t_{STE,LAG}$	STE lag time, Last clock to STE high	UCSTEM = 0, UCMODEx = 01 or 10	2 V, 3 V	200		ns
		UCSTEM = 1, UCMODEx = 01 or 10		200		
$t_{STE,ACC}$	STE access time, STE low to SIMO data out	UCSTEM = 0, UCMODEx = 01 or 10	2 V		50	ns
			3 V		30	
		UCSTEM = 1, UCMODEx = 01 or 10	2 V		50	
			3 V		30	
$t_{STE,DIS}$	STE disable time, STE high to SIMO high impedance	UCSTEM = 0, UCMODEx = 01 or 10	2 V		40	ns
			3 V		25	
		UCSTEM = 1, UCMODEx = 01 or 10	2 V		40	
			3 V		25	
$t_{SU,MI}$	SOMI input data setup time		2 V	50		ns
			3 V	30		
$t_{HD,MI}$	SOMI input data hold time		2 V	0		ns
			3 V	0		
$t_{VALID,MO}$	SIMO output data valid time(2)	UCLK edge to SIMO valid, C_L = 20 pF	2 V		9	ns
			3 V		5	
$t_{HD,MO}$	SIMO output data hold time(3)	C_L = 20 pF	2 V	0		ns
			3 V	0		

(1) $f_{UCxCLK} = 1/2t_{LO/HI}$ with $t_{LO/HI} = \max(t_{VALID,MO(eUSCI)} + t_{SU,SI(Slave)}, t_{SU,MI(eUSCI)} + t_{VALID,SO(Slave)})$
For the slave parameters $t_{SU,SI(Slave)}$ and $t_{VALID,SO(Slave)}$, see the SPI parameters of the attached slave.
(2) Specifies the time to drive the next valid data to the SIMO output after the output changing UCLK clock edge. See the timing diagrams in Figure 5-11 and Figure 5-12.
(3) Specifies how long data on the SIMO output is valid after the output changing UCLK clock edge. Negative values indicate that the data on the SIMO output can become invalid before the output changing clock edge observed on UCLK. See the timing diagrams in Figure 5-11 and Figure 5-12.

Copyright © 2014–2018, Texas Instruments Incorporated

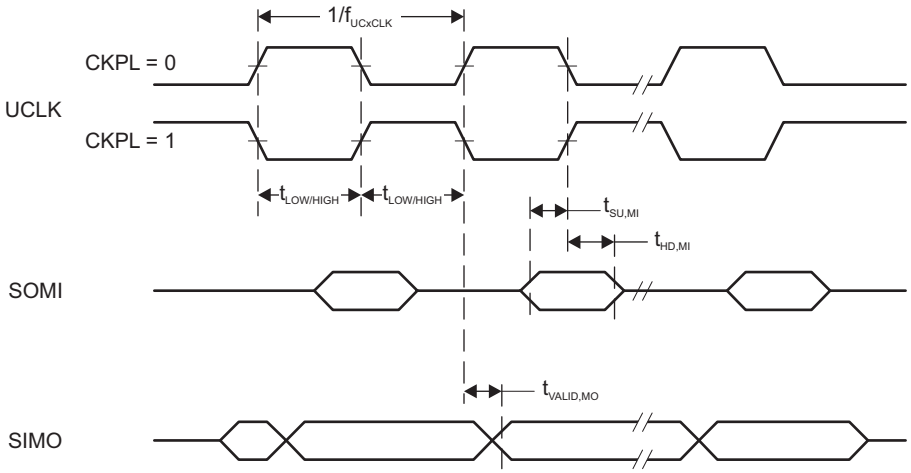

Figure 5-11. SPI Master Mode, CKPH = 0

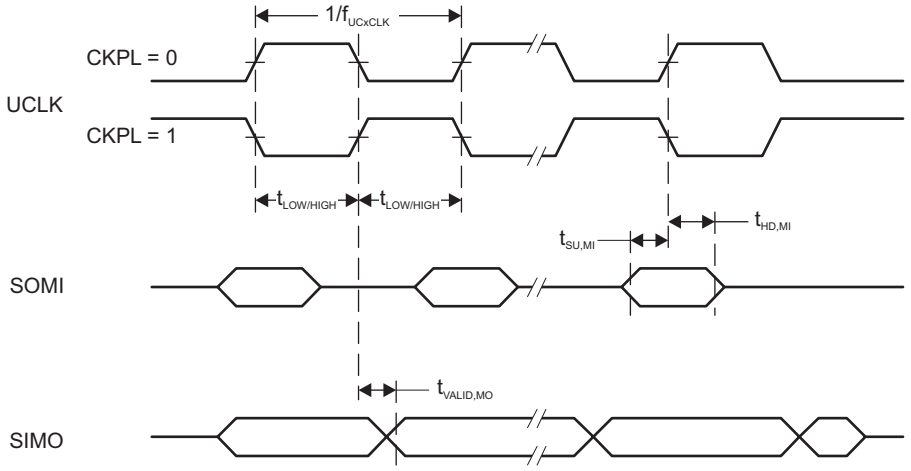

Figure 5-12. SPI Master Mode, CKPH = 1

Table 5-31 lists the characteristics of the eUSCI in SPI slave mode.

Table 5-31. eUSCI (SPI Slave Mode)

over recommended ranges of supply voltage and operating free-air temperature (unless otherwise noted)[1]

PARAMETER		TEST CONDITIONS	V_{CC}	MIN	TYP	MAX	UNIT
$t_{STE,LEAD}$	STE lead time, STE low to clock		2 V	4			ns
			3 V	3			
$t_{STE,LAG}$	STE lag time, Last clock to STE high		2 V	0			ns
			3 V	0			
$t_{STE,ACC}$	STE access time, STE low to SOMI data out		2 V			46	ns
			3 V			24	
$t_{STE,DIS}$	STE disable time, STE high to SOMI high impedance		2 V			38	ns
			3 V			25	
$t_{SU,SI}$	SIMO input data setup time		2 V	2			ns
			3 V	1			
$t_{HD,SI}$	SIMO input data hold time		2 V	2			ns
			3 V	2			
$t_{VALID,SO}$	SOMI output data valid time[2]	UCLK edge to SOMI valid, C_L = 20 pF	2 V			55	ns
			3 V			32	
$t_{HD,SO}$	SOMI output data hold time[3]	C_L = 20 pF	2 V	24			ns
			3 V	16			

(1) $f_{UCxCLK} = 1/2t_{LO/HI}$ with $t_{LO/HI} \geq \max(t_{VALID,MO(Master)} + t_{SU,SI(eUSCI)}, t_{SU,MI(Master)} + t_{VALID,SO(eUSCI)})$
For the master parameters $t_{SU,MI(Master)}$ and $t_{VALID,MO(Master)}$, see the SPI parameters of the attached master.
(2) Specifies the time to drive the next valid data to the SOMI output after the output changing UCLK clock edge. See the timing diagrams in Figure 5-13 and Figure 5-14.
(3) Specifies how long data on the SOMI output is valid after the output changing UCLK clock edge. See the timing diagrams in Figure 5-13 and Figure 5-14.

Copyright © 2014–2018, Texas Instruments Incorporated

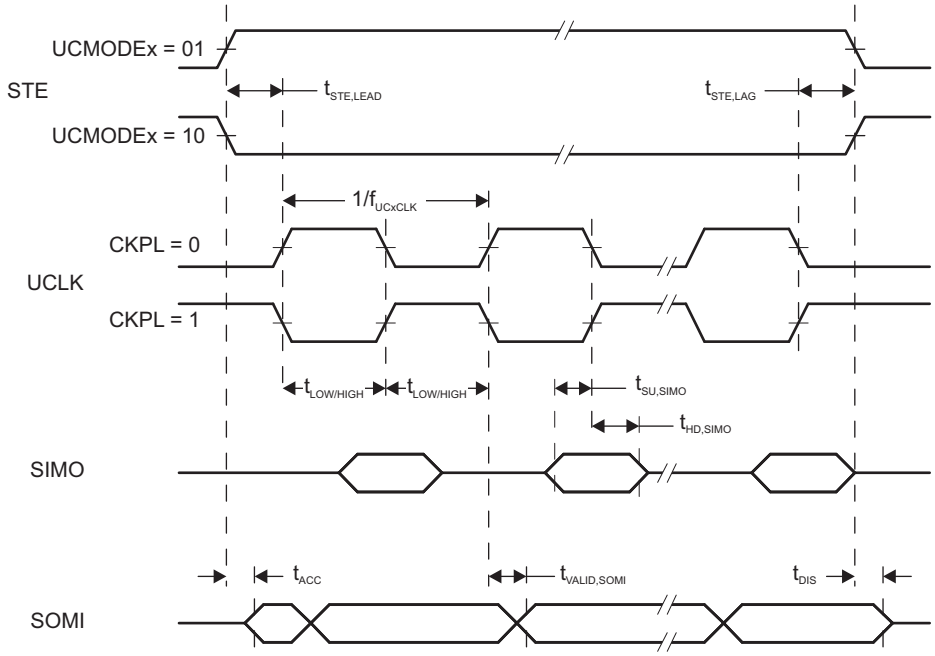

Figure 5-13. SPI Slave Mode, CKPH = 0

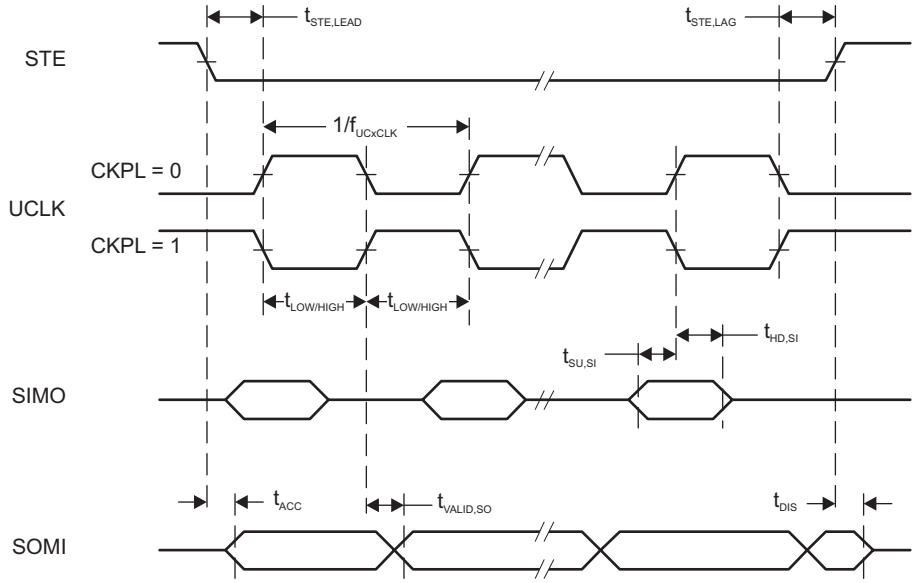

Figure 5-14. SPI Slave Mode, CKPH = 1

Table 5-32 lists the characteristics of the eUSCI in I²C mode.

Table 5-32. eUSCI (I²C Mode) Switching Characteristics

over recommended ranges of supply voltage and operating free-air temperature (unless otherwise noted) (see Figure 5-15)

PARAMETER		TEST CONDITIONS	V_{CC}	MIN	TYP	MAX	UNIT
f_{eUSCI}	eUSCI input clock frequency	Internal: SMCLK or ACLK, External: UCLK, Duty cycle = 50% ±10%				f_{SYSTEM}	MHz
f_{SCL}	SCL clock frequency		2 V, 3 V	0		400	kHz
$t_{HD,STA}$	Hold time (repeated) START	f_{SCL} = 100 kHz	2 V, 3 V	5.1			µs
		f_{SCL} > 100 kHz		1.5			
$t_{SU,STA}$	Setup time for a repeated START	f_{SCL} = 100 kHz	2 V, 3 V	5.1			µs
		f_{SCL} > 100 kHz		1.4			
$t_{HD,DAT}$	Data hold time		2 V, 3 V	0.4			µs
$t_{SU,DAT}$	Data setup time	f_{SCL} = 100 kHz	2 V, 3 V	5.0			µs
		f_{SCL} > 100 kHz		1.3			
$t_{SU,STO}$	Setup time for STOP	f_{SCL} = 100 kHz	2 V, 3 V	5.2			µs
		f_{SCL} > 100 kHz		1.7			
t_{SP}	Pulse duration of spikes suppressed by input filter	UCGLITx = 0	2 V, 3 V	75		220	ns
		UCGLITx = 1		35		120	
		UCGLITx = 2		30		60	
		UCGLITx = 3		20		35	
$t_{TIMEOUT}$	Clock low time-out	UCCLTOx = 1	2 V, 3 V		30		ms
		UCCLTOx = 2			33		
		UCCLTOx = 3			37		

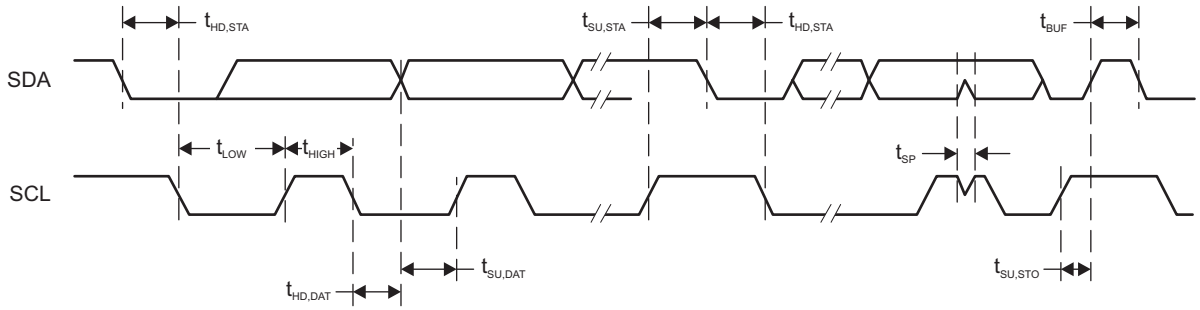

Figure 5-15. I²C Mode Timing

Copyright © 2014–2018, Texas Instruments Incorporated

5.14 RTC Tamper Detect Pin

Table 5-33 lists the input characteristics of the tamper detect pin.

Table 5-33. Schmitt-Trigger Inputs, RTC Tamper Detect Pin

over recommended ranges of supply voltage and operating free-air temperature (unless otherwise noted)

PARAMETER		TEST CONDITIONS	AUXVCC3	MIN	TYP	MAX	UNIT
V_{IT+}	Positive-going input threshold voltage		1.8 V	0.80		1.40	V
			3 V	1.50		2.10	
V_{IT-}	Negative-going input threshold voltage		1.8 V	0.45		1.00	V
			3 V	0.75		1.65	
V_{hys}	Input voltage hysteresis ($V_{IT+} – V_{IT-}$)		1.8 V	0.3		0.85	V
			3 V	0.4		1.0	
R_{Pull}	Pullup or pulldown resistor	For pullup: $V_{IN} = V_{SS}$ For pulldown: V_{IN} = AUXVCC3		20	35	50	kΩ
C_I	Input capacitance	$V_{IN} = V_{SS}$ or AUXVCC3			5		pF

Table 5-34 lists the input requirements of the tamper detect pin.

Table 5-34. Inputs, RTC Tamper Detect Pin(1)

over recommended ranges of supply voltage and operating free-air temperature (unless otherwise noted)

PARAMETER		TEST CONDITIONS	AUXVCC3	MIN	MAX	UNIT
$t_{(int)}$	External interrupt timing(2)	Port P1, P2: P1.x to P2.x, External trigger pulse duration to set interrupt flag	2.2 V, 3 V	20		ns

(1) Some devices may contain additional ports with interrupts. See the block diagram and terminal function descriptions.
(2) An external signal sets the interrupt flag every time the minimum interrupt pulse duration $t_{(int)}$ is met. It may be set by trigger signals shorter than $t_{(int)}$.

Table 5-35 lists the leakage current of the tamper detect pin.

Table 5-35. Leakage Current, RTC Tamper Detect Pin

over recommended ranges of supply voltage and operating free-air temperature (unless otherwise noted)

PARAMETER		TEST CONDITIONS	AUXVCC3	MIN	MAX	UNIT
$I_{lkg(Px.y)}$	High-impedance leakage current	See (1) (2)	1.8 V, 3 V	–50	+50	nA

(1) The leakage current is measured with V_{SS} or V_{CC} applied to the corresponding pins, unless otherwise noted.
(2) The leakage of the digital port pins is measured individually. The port pin is selected for input and the pullup or pulldown resistor is disabled.

Table 5-36 lists the output characteristics of the tamper detect pin.

Table 5-36. Outputs, RTC Tamper Detect Pin

over recommended ranges of supply voltage and operating free-air temperature (unless otherwise noted)

PARAMETER		TEST CONDITIONS	AUXVCC3	MIN	MAX	UNIT
V_{OH}	High-level output voltage	$I_{(OHmax)}$ = –100 µA(1)	1.8 V	1.50	1.80	V
		$I_{(OHmax)}$ = –200 µA(1)		1.20	1.80	
		$I_{(OHmax)}$ = –100 µA(1)	3 V	2.70	3.00	
		$I_{(OHmax)}$ = –200 µA(1)		2.40	3.00	
V_{OL}	Low-level output voltage	$I_{(OLmax)}$ = 100 µA(2)	1.8 V	0.00	0.25	V
		$I_{(OLmax)}$ = 200 µA(2)		0.00	0.60	
		$I_{(OLmax)}$ = 100 µA(2)	3 V	0.00	0.25	
		$I_{(OLmax)}$ = 200 µA(2)		0.00	0.60	

(1) The maximum total current, $I_{(OHmax)}$, for all outputs combined should not exceed ±20 mA to hold the maximum voltage drop specified. See Section 5.3 for more details.
(2) The maximum total current, $I_{(OHmax)}$, for all outputs combined should not exceed ±20 mA to hold the maximum voltage drop specified. See Section 5.3 for more details.

5.15 LCD_C

Table 5-37 lists the operating conditions of the LCD controller.

Table 5-37. LCD_C, Operating Conditions

PARAMETER		TEST CONDITIONS	MIN	NOM	MAX	UNIT
$V_{CC,LCD_C,CP\ en,3.6}$	Supply voltage range, charge pump enabled, $V_{LCD} \leq 3.6$ V	LCDCPEN = 1, 0000 < VLCDx ≤ 1111 (charge pump enabled, $V_{LCD} \leq 3.6$ V)	2.2		3.6	V
$V_{CC,LCD_C,CP\ en,3.3}$	Supply voltage range, charge pump enabled, $V_{LCD} \leq 3.3$ V	LCDCPEN = 1, 0000 < VLCDx ≤ 1100 (charge pump enabled, $V_{LCD} \leq 3.3$ V)	2.0		3.6	V
$V_{CC,LCD_C,int.\ bias}$	Supply voltage range, internal biasing, charge pump disabled	LCDCPEN = 0, VLCDEXT = 0	2.4		3.6	V
$V_{CC,LCD_C,ext.\ bias}$	Supply voltage range, external biasing, charge pump disabled	LCDCPEN = 0, VLCDEXT = 0	2.4		3.6	V
$V_{CC,LCD_C,VLCDEXT}$	Supply voltage range, external LCD voltage, internal or external biasing, charge pump disabled	LCDCPEN = 0, VLCDEXT = 1	2.0		3.6	V
$V_{LCDCAP/R33}$	External LCD voltage at LCDCAP/R33, internal or external biasing, charge pump disabled	LCDCPEN = 0, VLCDEXT = 1	2.4		3.6	V
C_{LCDCAP}	Capacitor on LCDCAP when charge pump enabled	LCDCPEN = 1, VLCDx > 0000 (charge pump enabled)	4.7	4.7	10	µF
f_{LCD}	LCD frequency range	$f_{FRAME} = 1/(2 \times mux) \times f_{LCD}$ with mux = 1 (static) to 8	0		1024	Hz
$f_{FRAME,4mux}$	LCD frame frequency range	$f_{FRAME,4mux}(MAX) = 1/(2 \times 4) \times f_{LCD}(MAX) = 1/(2 \times 4) \times 1024$ Hz			128	Hz
$f_{FRAME,8mux}$	LCD frame frequency range	$f_{FRAME,8mux}(MAX) = 1/(2 \times 4) \times f_{LCD}(MAX) = 1/(2 \times 8) \times 1024$ Hz			64	Hz
$f_{ACLK,in}$	ACLK input frequency range		30	32	40	kHz
C_{Panel}	Panel capacitance	100-Hz frame frequency			10000	pF
V_{R33}	Analog input voltage at R33	LCDCPEN = 0, VLCDEXT = 1	2.4		V_{CC} + 0.2	V
$V_{R23,1/3bias}$	Analog input voltage at R23	LCDREXT = 1, LCDEXTBIAS = 1, LCD2B = 0	V_{R13}	V_{R03} + 2/3 × (V_{R33} – V_{R03})	V_{R33}	V
$V_{R13,1/3bias}$	Analog input voltage at R13 with 1/3 biasing	LCDREXT = 1, LCDEXTBIAS = 1, LCD2B = 0	V_{R03}	V_{R03} + 1/3 × (V_{R33} – V_{R03})	V_{R23}	V
$V_{R13,1/2bias}$	Analog input voltage at R13 with 1/2 biasing	LCDREXT = 1, LCDEXTBIAS = 1, LCD2B = 1	V_{R03}	V_{R03} + 1/2 × (V_{R33} – V_{R03})	V_{R33}	V
V_{R03}	Analog input voltage at R03	R03EXT = 1	V_{SS}			V
$V_{LCD} – V_{R03}$	Voltage difference between V_{LCD} and R03	LCDCPEN = 0, R03EXT = 1	2.4		V_{CC} + 0.2	V
$V_{LCDREF/R13}$	External LCD reference voltage applied at LCDREF/R13	VLCDREFx = 01	0.8	1.2	1.5	V

Copyright © 2014–2018, Texas Instruments Incorporated

Table 5-38 lists the characteristics of the LCD controller.

Table 5-38. LCD_C, Electrical Characteristics

over operating free-air temperature range (unless otherwise noted)

PARAMETER		TEST CONDITIONS	V_{CC}	MIN	TYP	MAX	UNIT
V_{LCD}	LCD voltage	VLCDx = 0000, VLCDEXT = 0	2.4 V to 3.6 V		V_{CC}		V
		LCDCPEN = 1, VLCDx = 0001	2 V to 3.6 V		2.60		
		LCDCPEN = 1, VLCDx = 0010	2 V to 3.6 V		2.66		
		LCDCPEN = 1, VLCDx = 0011	2 V to 3.6 V		2.72		
		LCDCPEN = 1, VLCDx = 0100	2 V to 3.6 V		2.78		
		LCDCPEN = 1, VLCDx = 0101	2 V to 3.6 V		2.84		
		LCDCPEN = 1, VLCDx = 0110	2 V to 3.6 V		2.90		
		LCDCPEN = 1, VLCDx = 0111	2 V to 3.6 V		2.96		
		LCDCPEN = 1, VLCDx = 1000	2 V to 3.6 V		3.02		
		LCDCPEN = 1, VLCDx = 1001	2 V to 3.6 V		3.08		
		LCDCPEN = 1, VLCDx = 1010	2 V to 3.6 V		3.14		
		LCDCPEN = 1, VLCDx = 1011	2 V to 3.6 V		3.20		
		LCDCPEN = 1, VLCDx = 1100	2 V to 3.6 V		3.26		
		LCDCPEN = 1, VLCDx = 1101	2.2 V to 3.6 V		3.32		
		LCDCPEN = 1, VLCDx = 1110	2.2 V to 3.6 V		3.38		
		LCDCPEN = 1, VLCDx = 1111	2.2 V to 3.6 V		3.50	3.72	
$I_{CC,Peak,CP}$	Peak supply currents due to charge pump activities	LCDCPEN = 1, VLCDx = 1111	2.2 V		200		µA
$t_{LCD,CP,on}$	Time to charge C_{LCD} when discharged	C_{LCD} = 4.7 µF, LCDCPEN = 0→1, VLCDx = 1111	2.2 V		100	500	ms
$I_{CP,Load}$	Maximum charge pump load current	LCDCPEN = 1, VLCDx = 1111	2.2 V	50			µA
$R_{LCD,Seg}$	LCD driver output impedance, segment lines	LCDCPEN = 1, VLCDx = 1000, I_{LOAD} = ±10 µA	2.2 V			10	kΩ
$R_{LCD,COM}$	LCD driver output impedance, common lines	LCDCPEN = 1, VLCDx = 1000, I_{LOAD} = ±10 µA	2.2 V			10	kΩ

5.16 SD24_B

Table 5-39 lists the operating conditions of the SD24_B.

Table 5-39. SD24_B, Power Supply and Operating Conditions

				MIN	TYP	MAX	UNIT
AV_{CC}	Analog supply voltage	$AV_{CC} = DV_{CC}$, $AV_{SS} = DV_{SS} = 0$ V		2.4		3.6	V
T_A	Ambient temperature			–40		85	°C
f_{SD}	Modulator clock frequency			0.03		2.3	MHz
V_I	Absolute input voltage			$AV_{SS} – 1$		AV_{CC}	V
V_{IC}	Common-mode input voltage			$AV_{SS} – 1$		AV_{CC}	V
$V_{ID,FS}$	Differential full-scale input voltage	Bipolar mode, $V_{ID} = V_{I,A+} – V_{I,A–}$		$–V_{REF}$/GAIN		$+V_{REF}$/GAIN	mV
V_{ID}	Differential input voltage for specified performance (1)	REFON = 1	SD24GAINx = 1	±900	±930		mV
			SD24GAINx = 2	±450	±460		
			SD24GAINx = 4	±225	±230		
			SD24GAINx = 8	±112	±120		
			SD24GAINx = 16	±56	±60		
			SD24GAINx = 32	±28	±30		
			SD24GAINx = 64	±14	±14		
			SD24GAINx = 128	±7	±7.25		
C_{REF}	VREF load capacitance (2)	SD24REFS = 1			100		nF

(1) The full-scale range (FSR) is defined by $V_{FS+} = +V_{REF}$/GAIN and $V_{FS–} = –V_{REF}$/GAIN: FSR = $V_{FS+} – V_{FS–} = 2 \times V_{REF}$/GAIN. If V_{REF} is sourced externally, the analog input range should not exceed 80% of V_{FS+} or $V_{FS–}$, that is, $V_{ID} = 0.8\ V_{FS–}$ to $0.8\ V_{FS+}$. If V_{REF} is sourced internally, the given V_{ID} ranges apply. MIN values are calculated based on a V_{REF} of 1.125 V. TYP values are calculated based on a V_{REF} of 1.16 V.
(2) There is no capacitance required on VREF. However, TI recommends using a capacitance of 100 nF to reduce any reference voltage noise.

Table 5-40 lists the analog input characteristics of the SD24_B.

Table 5-40. SD24_B, Analog Inputs (1)

Also see Figure 5-16

PARAMETER		TEST CONDITIONS		V_{CC}	MIN	TYP	MAX	UNIT
C_I	Input capacitance	SD24GAINx = 1				5.0		pF
		SD24GAINx = 2				5.0		
		SD24GAINx = 4				5.0		
		SD24GAINx = 8				5.0		
		SD24GAINx = 16				5.0		
		SD24GAINx = 32, 64, 128				5.0		
Z_I	Input impedance (pin A+ or A- to AV_{SS})	f_{SD24} = 1 MHz	SD24GAINx = 1	3 V		200		kΩ
			SD24GAINx = 8			200		
			SD24GAINx = 32			200		
Z_{ID}	Differential input impedance (pin A+ to pin A-)	f_{SD24} = 1 MHz	SD24GAINx = 1	3 V	300	400		kΩ
			SD24GAINx = 8			400		
			SD24GAINx = 32		300	400		

(1) All parameters pertain to each SD24_B converter.

Copyright © 2014–2018, Texas Instruments Incorporated

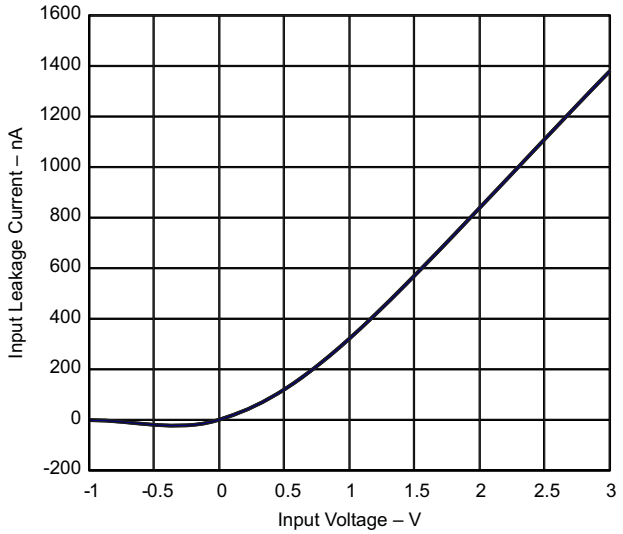

Figure 5-16. Input Leakage Current vs Input Voltage (Modulator OFF)

Table 5-41 lists the supply currents of the SD24_B.

Table 5-41. SD24_B, Supply Currents

PARAMETER		TEST CONDITIONS		V_{CC}	MIN	TYP	MAX	UNIT
$I_{SD,256}$	Analog plus digital supply current per converter (reference not included)	f_{SD24} = 1 MHz, SD24OSR = 256	SD24GAIN: 1	3 V		490	600	µA
			SD24GAIN: 2			490	600	
			SD24GAIN: 4			490	600	
			SD24GAIN: 8			559	700	
			SD24GAIN: 16			559	700	
			SD24GAIN: 32			627	800	
			SD24GAIN: 64			627	800	
			SD24GAIN: 128			627	800	
$I_{SD,512}$	Analog plus digital supply current per converter (reference not included)	f_{SD24} = 2 MHz, SD24OSR = 512	SD24GAIN: 1	3 V		600	700	µA
			SD24GAIN: 8			677	800	
			SD24GAIN: 32			740	900	
$I_{SD24REFonly}$	Current of internal SD24 reference and buffers (includes shared reference)	No converter is active, (SD24REFS = 1, SD24BCCTLx.SD24SC = 0)		3 V		147	190	µA
$I_{SD24REF,Conv0}$	Current of internal SD24 reference and buffers (includes shared reference)	Converter 0 is active, (SD24REFS = 1, SD24BCCTL0.SD24SC = 1)		3 V		75	110	µA
$I_{SD24REF,notConv0}$	Current of internal SD24 reference and buffers (includes shared reference)	Any converter other than converter 0 is active, (SD24REFS = 1, SD24BCCTL0.SD24SC = 0, SD24BCCTLx.SD24SC = 1)		3 V		137	175	µA

Table 5-42 lists the performance characteristics of the SD24_B.

Table 5-42. SD24_B, Performance

f_{SD24} = 1 MHz, SD24OSRx = 256, SD24REFON = 1

PARAMETER		TEST CONDITIONS	V_{CC}	MIN	TYP	MAX	UNIT
INL	Integral nonlinearity, end-point fit	SD24GAIN: 1	3 V	–0.01		+0.01	% of FSR
		SD24GAIN: 8		–0.01		+0.01	
		SD24GAIN: 32		–0.01		+0.01	
G_{nom}	Nominal gain	SD24GAIN: 1	3 V		1		
		SD24GAIN: 2			2		
		SD24GAIN: 4			4		
		SD24GAIN: 8			8		
		SD24GAIN: 16			16		
		SD24GAIN: 32			32		
		SD24GAIN: 64			64		
		SD24GAIN: 128			128		
E_G	Gain error (1)	SD24GAIN: 1, with external reference (1.2 V)	3 V	–1%		+1%	
		SD24GAIN: 8, with external reference (1.2 V)		–2%		+2%	
		SD24GAIN: 32, with external reference (1.2 V)		–2%		+2%	
$\Delta E_G/\Delta T$	Gain error temperature coefficient (2), internal reference	SD24GAIN: 1, 8, or 32 (with internal reference)	3 V			80	ppm/°C
$\Delta E_G/\Delta T$	Gain error temperature coefficient (2), external reference	SD24GAIN: 1 (with external reference)	3 V			15	ppm/°C
		SD24GAIN: 8 (with external reference)				15	
		SD24GAIN: 32 (with external reference)				15	
$\Delta E_G/\Delta V_{CC}$	Gain error vs V_{CC} (3)	SD24GAIN: 1	3 V		0.1		%/V
		SD24GAIN: 8			0.1		
		SD24GAIN: 32			0.4		
E_{OS}[V]	Offset error (4)	SD24GAIN: 1 (with Vdiff = 0 V)	3 V			2.3	mV
		SD24GAIN: 8				1	
		SD24GAIN: 32				0.5	
E_{OS}[FS]	Offset error (4)	SD24GAIN: 1 (with Vdiff = 0 V)	3 V	–0.2		+0.2	% FS
		SD24GAIN: 8		–0.7		+0.7	
		SD24GAIN: 32		–1.4		+1.4	
$\Delta E_{OS}/\Delta T$	Offset error temperature coefficient (5)	SD24GAIN: 1	3 V		2		µV/°C
		SD24GAIN: 8			0.25		
		SD24GAIN: 32			0.1		

(1) The gain error E_G specifies the deviation of the actual gain G_{act} from the nominal gain G_{nom}: $E_G = (G_{act} – G_{nom})/G_{nom}$. It covers process, temperature, and supply voltage variations.
(2) The gain error temperature coefficient $\Delta E_G/ \Delta T$ specifies the variation of the gain error E_G over temperature ($E_G(T) = (G_{act}(T) – G_{nom})/G_{nom}$) using the box method (that is, minimum and maximum values):
$\Delta E_G/ \Delta T = (MAX(E_G(T)) – MIN(E_G(T))) / (MAX(T) – MIN(T)) = (MAX(G_{act}(T)) – MIN(G_{act}(T)) / G_{nom} / (MAX(T) – MIN(T))$
with T ranging from –40°C to 85°C.
(3) The gain error vs V_{CC} coefficient $\Delta E_G/ \Delta V_{CC}$ specifies the variation of the gain error E_G over supply voltage ($E_G(V_{CC}) = (G_{act}(V_{CC}) – G_{nom})/G_{nom}$) using the box method (that is, minimum and maximum values):
$\Delta E_G/ \Delta V_{CC} = (MAX(E_G(V_{CC})) – MIN(E_G(V_{CC})) / (MAX(V_{CC}) – MIN(V_{CC})) = (MAX(G_{act}(V_{CC})) – MIN(G_{act}(V_{CC})) / G_{nom} / (MAX(V_{CC}) – MIN(V_{CC}))$
with V_{CC} ranging from 2.4 V to 3.6 V.
(4) The offset error E_{OS} is measured with shorted inputs in 2s-complement mode with +100% FS = V_{REF}/G and –100% FS = $–V_{REF}/G$. Conversion between E_{OS} [FS] and E_{OS} [V] is as follows: E_{OS} [FS] = E_{OS} [V] × G/V_{REF}, E_{OS} [V] = E_{OS} [FS] × V_{REF}/G.
(5) The offset error temperature coefficient $\Delta E_{OS}/ \Delta T$ specifies the variation of the offset error E_{OS} over temperature using the box method (that is, minimum and maximum values):
$\Delta E_{OS}/ \Delta T = (MAX(E_{OS}(T)) – MIN(E_{OS}(T)) / (MAX(T) – MIN(T))$
with T ranging from –40°C to 85°C.

Copyright © 2014–2018, Texas Instruments Incorporated

Table 5-42. SD24_B, Performance (continued)

f_{SD24} = 1 MHz, SD24OSRx = 256, SD24REFON = 1

PARAMETER		TEST CONDITIONS	V_{CC}	MIN	TYP	MAX	UNIT
$\Delta E_{OS}/\Delta V_{CC}$	Offset error vs V_{CC} (6)	SD24GAIN: 1	3 V		500		µV/V
		SD24GAIN: 8			125		
		SD24GAIN: 32			50		
CMRR,DC	Common-mode rejection at DC (7)	SD24GAIN: 1	3 V		–120		dB
		SD24GAIN: 8			–110		
		SD24GAIN: 32			–100		
CMRR,50Hz	Common-mode rejection at 50 Hz (8)	SD24GAIN: 1, f_{CM} = 50 Hz, V_{CM} = 930 mV	3 V		–120		dB
		SD24GAIN: 8, f_{CM} = 50 Hz, V_{CM} = 120 mV			–110		
		SD24GAIN: 32, f_{CM} = 50 Hz, V_{CM} = 30 mV			–100		
AC PSRR, ext	AC power supply rejection ratio, external reference (9)	SD24GAIN: 1, V_{CC} = 3 V + 50 mV × sin(2π × f_{VCC} × t), f_{VCC} = 50 Hz			–61		dB
		SD24GAIN: 8, V_{CC} = 3 V + 50 mV × sin(2π × f_{VCC} × t), f_{VCC} = 50 Hz			–75		
		SD24GAIN: 32, V_{CC} = 3 V + 50 mV × sin(2π × f_{VCC} × t), f_{VCC} = 50 Hz			–79		
AC PSRR, int	AC power supply rejection ratio, internal reference (9)	SD24GAIN: 1, V_{CC} = 3 V + 50 mV × sin(2π × f_{VCC} × t), f_{VCC} = 50 Hz			–61		dB
		SD24GAIN: 8, V_{CC} = 3 V + 50 mV × sin(2π × f_{VCC} × t), f_{VCC} = 50 Hz			–75		
		SD24GAIN: 32, V_{CC} = 3 V + 50 mV × sin(2π × f_{VCC} × t), f_{VCC} = 50 Hz			–79		
XT	Crosstalk between converters (10)	Crosstalk source: SD24GAIN: 1, Sine-wave with maximum possible Vpp, f_{IN} = 50 Hz or 100 Hz, Converter under test: SD24GAIN: 1	3 V		–120		dB
		Crosstalk source: SD24GAIN: 1, Sine-wave with maximum possible Vpp, f_{IN} = 50 Hz or 100 Hz, Converter under test: SD24GAIN: 8			–115		
		Crosstalk source: SD24GAIN: 1, Sine-wave with maximum possible Vpp, f_{IN} = 50 Hz or 100 Hz, Converter under test: SD24GAIN: 32			–110		

(6) The offset error vs V_{CC} $\Delta E_{OS}/\Delta V_{CC}$ specifies the variation of the offset error E_{OS} over supply voltage using the box method (that is, minimum and maximum values):
$\Delta E_{OS}/\Delta V_{CC}$ = (MAX(E_{OS}(V_{CC})) – MIN(E_{OS}(V_{CC})) / (MAX(V_{CC}) – MIN(V_{CC}))
with V_{CC} ranging from 2.4 V to 3.6 V.

(7) The DC CMRR specifies the change in the measured differential input voltage value when the common-mode voltage varies:
DC CMRR = –20log(Δ_{MAX}/FSR) with Δ_{MAX} being the difference between the minium value and the maximum value measured when sweeping the common-mode voltage.
The DC CMRR is measured with both inputs connected to the common-mode voltage (that is, no differential input signal is applied), and the common-mode voltage is swept from –1 V to V_{CC}.

(8) The AC CMRR is the difference between a hypothetical signal with the amplitude and frequency of the applied common-mode ripple applied to the inputs of the ADC and the actual common-mode signal spur visible in the FFT spectrum:
AC CMRR = Error Spur [dBFS] – 20log(V_{CM} / 1.2 V / G) [dBFS] with a common-mode signal of V_{CM} × sin(2π × f_{CM} × t) applied to the analog inputs.
The AC CMRR is measured with the both inputs connected to the common-mode signal; that is, no differential input signal is applied.
With the specified typical values the error spur is within the noise floor (as specified by the SINAD values).

(9) The AC PSRR is the difference between a hypothetical signal with the amplitude and frequency of the applied supply voltage ripple applied to the inputs of the ADC and the actual supply ripple spur visible in the FFT spectrum:
AC PSRR = Error Spur [dBFS] – 20log(50 mV / 1.2 V / G) [dBFS] with a signal of 50 mV × sin(2π × f_{VCC} × t) added to V_{CC}.
The AC PSRR is measured with the inputs grounded; that is, no analog input signal is applied.
With the specified typical values the error spur is within the noise floor (as specified by the SINAD values).
SD24GAIN: 1 → Hypothetical signal: 20log(50 mV / 1.2 V / 1) = –27.6 dBFS
SD24GAIN: 8 → Hypothetical signal: 20log(50 mV / 1.2 V / 8) = –9.5 dBFS
SD24GAIN: 32 → Hypothetical signal: 20log(50 mV / 1.2 V / 32) = 2.5 dBFS

(10) The crosstalk XT is specified as the tone level of the signal applied to the crosstalk source seen in the spectrum of the converter under test. It is measured with the inputs of the converter under test being grounded.

Copyright © 2014–2018, Texas Instruments Incorporated

Table 5-43 lists the AC performance characteristics of the SD24_B.

Table 5-43. SD24_B, AC Performance

f_{SD24} = 1 MHz, SD24OSRx = 256, SD24REFON = 1

PARAMETER		TEST CONDITIONS		V_{CC}	MIN	TYP	MAX	UNIT
SINAD	Signal-to-noise + distortion ratio	SD24GAIN: 1	f_{IN} = 50 Hz (1)	3 V	82	86		dB
		SD24GAIN: 2				85		
		SD24GAIN: 4				84		
		SD24GAIN: 8			81	83		
		SD24GAIN: 16				80		
		SD24GAIN: 32			71	73		
		SD24GAIN: 64				67		
		SD24GAIN: 128				61		
THD	Total harmonic distortion	SD24GAIN: 1	f_{IN} = 50 Hz (1)	3 V		95		dB
		SD24GAIN: 8				90		
		SD24GAIN: 32				86		

(1) The following voltages were applied to the SD24_B inputs: $V_{I,A+}(t) = 0\ V + V_{PP} / 2 \times \sin(2\pi \times f_{IN} \times t)$ and $V_{I,A-}(t) = 0\ V - V_{PP}/2 \times \sin(2\pi \times f_{IN} \times t)$
resulting in a differential voltage of $V_{ID} = V_{I,A+}(t) - V_{I,A-}(t) = V_{PP} \times \sin(2\pi \times f_{IN} \times t)$ with V_{PP} being selected as the maximum value allowed for a given range (according to SD24_B recommended operating conditions).

Table 5-44 lists the AC performance characteristics of the SD24_B.

Table 5-44. SD24_B, AC Performance

f_{SD24} = 2 MHz, SD24OSRx = 512, SD24REFON = 1

PARAMETER		TEST CONDITIONS		V_{CC}	MIN	TYP	MAX	UNIT
SINAD	Signal-to-noise + distortion ratio	SD24GAIN: 1	f_{IN} = 50 Hz (1)	3 V		87		dB
		SD24GAIN: 2				85		
		SD24GAIN: 4				84		
		SD24GAIN: 8				83		
		SD24GAIN: 16				81		
		SD24GAIN: 32				76		
		SD24GAIN: 64				71		
		SD24GAIN: 128				65		

(1) The following voltages were applied to the SD24_B inputs: $V_{I,A+}(t) = 0\ V + V_{PP} / 2 \times \sin(2\pi \times f_{IN} \times t)$ and $V_{I,A-}(t) = 0\ V - V_{PP}/2 \times \sin(2\pi \times f_{IN} \times t)$
resulting in a differential voltage of $V_{ID} = V_{I,A+}(t) - V_{I,A-}(t) = V_{PP} \times \sin(2\pi \times f_{IN} \times t)$ with V_{PP} being selected as the maximum value allowed for a given range (according to SD24_B recommended operating conditions).

Copyright © 2014–2018, Texas Instruments Incorporated

Table 5-45 lists the AC performance characteristics of the SD24_B.

Table 5-45. SD24_B, AC Performance

f_{SD24} = 32 kHz, SD24OSRx = 512, SD24REFON = 1 (see Figure 5-17 and Figure 5-18)

PARAMETER		TEST CONDITIONS		V_{CC}	MIN	TYP	MAX	UNIT
SINAD	Signal-to-noise + distortion ratio	SD24GAIN: 1	f_{IN} = 50 Hz (1)	3 V		89		dB
		SD24GAIN: 2				85		
		SD24GAIN: 4				84		
		SD24GAIN: 8				82		
		SD24GAIN: 16				80		
		SD24GAIN: 32				76		
		SD24GAIN: 64				67		
		SD24GAIN: 128				61		

(1) The following voltages were applied to the SD24_B inputs: $V_{I,A+}(t) = 0\ V + V_{PP} / 2 \times \sin(2\pi \times fIN \times t)$ and $V_{I,A-}(t) = 0\ V - V_{PP}/2 \times \sin(2\pi \times f_{IN} \times t)$
resulting in a differential voltage of $V_{ID} = V_{I,A+}(t) - V_{I,A-}(t) = V_{PP} \times \sin(2\pi \times f_{IN} \times t)$ with V_{PP} being selected as the maximum value allowed for a given range (according to SD24_B recommended operating conditions).

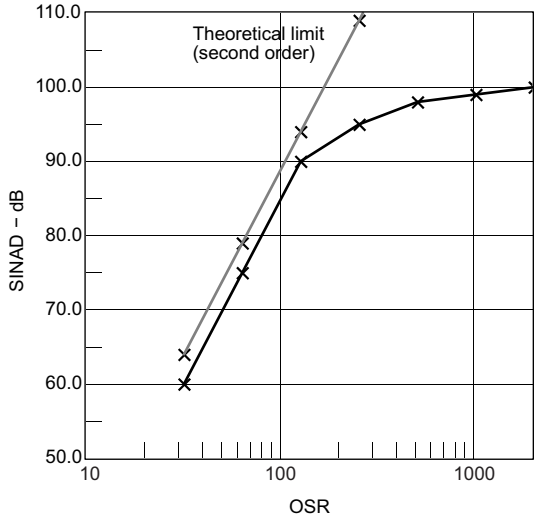

Figure 5-17. SINAD vs OSR (f_{SD24} = 1 MHz, SD24REFON = 1, SD24GAIN = 1)

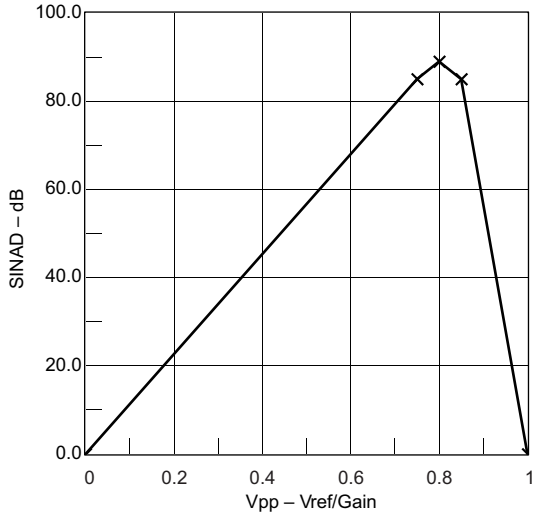

Figure 5-18. SINAD vs V_{PP}

Table 5-46 lists the external reference requirements of the SD24_B.

Table 5-46. SD24_B External Reference Input

ensure correct input voltage range according to V_{REF}

PARAMETER		TEST CONDITIONS	V_{CC}	MIN	TYP	MAX	UNIT
$V_{REF(I)}$	Input voltage	SD24REFS = 0	3 V	1.0	1.20	1.5	V
$I_{REF(I)}$	Input current	SD24REFS = 0	3 V			50	nA

5.17 ADC10_A

Table 5-47 lists the input requirements of the ADC.

Table 5-47. 10-Bit ADC, Power Supply and Input Range Conditions

over recommended ranges of supply voltage and operating free-air temperature (unless otherwise noted)

PARAMETER		TEST CONDITIONS	V_{CC}	MIN	TYP	MAX	UNIT
AV_{CC}	Analog supply voltage	AVCC and DVCC are connected together, AVSS and DVSS are connected together, $V_{(AVSS)} = V_{(DVSS)} = 0$ V		1.8		3.6	V
$V_{(Ax)}$	Analog input voltage range (1)	All ADC10_A pins		0		AV_{CC}	V
I_{ADC10_A}	Operating supply current into AVCC terminal, REF module and reference buffer off	$f_{ADC10CLK}$ = 5 MHz, ADC10ON = 1, REFON = 0, SHT0 = 0, SHT1 = 0, ADC10DIV = 0, ADC10SREF = 00	2.2 V		68	100	µA
			3 V		78	110	
	Operating supply current into AVCC terminal, REF module on, reference buffer on	$f_{ADC10CLK}$ = 5 MHz, ADC10ON = 1, REFON = 1, SHT0 = 0, SHT1 = 0, ADC10DIV = 0, ADC10SREF = 01	3 V		124	180	
	Operating supply current into AVCC terminal, REF module off, reference buffer on	$f_{ADC10CLK}$ = 5 MHz, ADC10ON = 1, REFON = 0, SHT0 = 0, SHT1 = 0, ADC10DIV = 0, ADC10SREF = 10, VEREF = 2.5 V	3 V		105	160	
	Operating supply current into AVCC terminal, REF module off, reference buffer off	$f_{ADC10CLK}$ = 5 MHz, ADC10ON = 1, REFON = 0, SHT0 = 0, SHT1 = 0, ADC10DIV = 0, ADC10SREF = 11, VEREF = 2.5 V	3 V		72	110	
C_I	Input capacitance	Only one terminal Ax can be selected at one time from the pad to the ADC10_A capacitor array including wiring and pad	2.2 V		3.5		pF
R_I	Input MUX ON resistance	AV_{CC} > 2.0 V, 0 V ≤ V_{Ax} ≤ AV_{CC}				36	kΩ
		1.8 V < AV_{CC} < 2.0 V, 0 V ≤ V_{Ax} ≤ AV_{CC}				96	

(1) The analog input voltage range must be within the selected reference voltage range V_{R+} to V_{R-} for valid conversion results. The external reference voltage requires decoupling capacitors. Connect two decoupling capacitors, 10 µF and 100 nF, to VREF to decouple the dynamic current required for an external reference source if it is used for the ADC10_A. Also see the *MSP430x5xx and MSP430x6xx Family User's Guide*.

Table 5-48 lists the switching characteristics of the ADC.

Table 5-48. 10-Bit ADC, Switching Characteristics

over recommended ranges of supply voltage and operating free-air temperature (unless otherwise noted)

PARAMETER		TEST CONDITIONS	V_{CC}	MIN	TYP	MAX	UNIT
$f_{ADC10CLK}$		For specified performance of ADC10_A linearity parameters	2.2 V, 3 V	0.45	5	5.5	MHz
$f_{ADC10OSC}$	Internal ADC10_A oscillator (1)	ADC10DIV = 0, $f_{ADC10CLK}$ = $f_{ADC10OSC}$	2.2 V, 3 V	4.4	4.9	5.6	MHz
$t_{CONVERT}$	Conversion time	REFON = 0, Internal oscillator, 12 ADC10CLK cycles, 10-bit mode, $f_{ADC10OSC}$ = 4 MHz to 5 MHz	2.2 V, 3 V	2.4		3.0	µs
		External $f_{ADC10CLK}$ from ACLK, MCLK, or SMCLK, ADC10SSEL ≠ 0			12 × 1 / $f_{ADC10CLK}$		
$t_{ADC10ON}$	Turn-on settling time of the ADC	See (2)				100	ns
t_{Sample}	Sampling time	R_S = 1000 Ω, R_I = 96 kΩ, C_I = 3.5 pF (3)	1.8 V	3			µs
		R_S = 1000 Ω, R_I = 36 kΩ, C_I = 3.5 pF (3)	3 V	1			

(1) The ADC10OSC is sourced directly from MODOSC inside the UCS.
(2) The condition is that the error in a conversion started after $t_{ADC10ON}$ is less than ±0.5 LSB. The reference and input signal are already settled.
(3) Approximately 8 Tau (τ) are needed to get an error of less than ±0.5 LSB

Copyright © 2014–2018, Texas Instruments Incorporated

Table 5-49 lists the linearity parameters of the ADC.

Table 5-49. 10-Bit ADC, Linearity Parameters

over recommended ranges of supply voltage and operating free-air temperature (unless otherwise noted)

PARAMETER		TEST CONDITIONS	V_{CC}	MIN	MAX	UNIT
E_I	Integral linearity error	$1.4\ V \le (V_{eREF+} - V_{eREF-}) \le 1.6\ V$, $C_{VeREF+} = 20\ pF$	2.2 V, 3 V	–1.0	+1.0	LSB
		$1.6\ V < (V_{eREF+} - V_{eREF-}) \le V_{AVCC}$, $C_{VeREF+} = 20\ pF$		–1.0	+1.0	
E_D	Differential linearity error	$1.4\ V \le (V_{eREF+} - V_{eREF-})$, $C_{VeREF+} = 20\ pF$	2.2 V, 3 V	–1.0	+1.0	LSB
E_O	Offset error	$1.4\ V \le (V_{eREF+} - V_{eREF-})$, $C_{VeREF+} = 20\ pF$ Internal impedance of source $R_S < 100\ \Omega$	2.2 V, 3 V	–1.0	+1.0	LSB
E_G	Gain error	$1.4\ V \le (V_{eREF+} - V_{eREF-})$, $C_{VeREF+} = 20\ pF$, ADC10SREFx = 11b	2.2 V, 3 V	–1.0	+1.0	LSB
E_T	Total unadjusted error	$1.4\ V \le (V_{eREF+} - V_{eREF-})$, $C_{VeREF+} = 20\ pF$, ADC10SREFx = 11b	2.2 V, 3 V	–2.0	+2.0	LSB

Table 5-50 lists the requirement for the ADC external reference.

Table 5-50. 10-Bit ADC, External Reference

over recommended ranges of supply voltage and operating free-air temperature (unless otherwise noted)(1)

PARAMETER		TEST CONDITIONS	V_{CC}	MIN	MAX	UNIT
V_{eREF+}	Positive external reference voltage input	$V_{eREF+} > V_{eREF-}$ (2)		1.4	AV_{CC}	V
V_{eREF-}	Negative external reference voltage input	$V_{eREF+} > V_{eREF-}$ (3)		0	1.2	V
$(V_{eREF+} - V_{eREF-})$	Differential external reference voltage input	$V_{eREF+} > V_{eREF-}$ (4)		1.4	AV_{CC}	V
I_{VeREF+}, I_{VeREF-}	Static input current	$1.4\ V \le V_{eREF+} \le V_{AVCC}$, $V_{eREF-} = 0\ V$, $f_{ADC10CLK} = 5\ MHz$, ADC10SHTx = 0x0001, Conversion rate 200 ksps	2.2 V, 3 V	–26	+26	µA
		$1.4\ V \le V_{eREF+} \le V_{AVCC}$, $V_{eREF-} = 0\ V$, $f_{ADC10CLK} = 5\ MHZ$, ADC10SHTX = 0x1000, Conversion rate 20 ksps		–1	+1	
C_{VREF+}	Capacitance at VREF+ terminal	See (5)		10		µF

(1) The external reference is used during ADC conversion to charge and discharge the capacitance array. The input capacitance, C_I, is also the dynamic load for an external reference during conversion. The dynamic impedance of the reference supply should follow the recommendations on analog-source impedance to allow the charge to settle for 10-bit accuracy.
(2) The accuracy limits the minimum positive external reference voltage. Lower reference voltage levels may be applied with reduced accuracy requirements.
(3) The accuracy limits the maximum negative external reference voltage. Higher reference voltage levels may be applied with reduced accuracy requirements.
(4) The accuracy limits minimum external differential reference voltage. Lower differential reference voltage levels may be applied with reduced accuracy requirements.
(5) Connect two decoupling capacitors, 10 µF and 100 nF, to VREF to decouple the dynamic current required for an external reference source if it is used for the ADC10_A. Also see the *MSP430x5xx and MSP430x6xx Family User's Guide*.

5.18 REF

Table 5-51 lists the characteristics of the REF.

Table 5-51. REF Built-In Reference

over recommended ranges of supply voltage and operating free-air temperature (unless otherwise noted)

PARAMETER		TEST CONDITIONS	V_{CC}	MIN	TYP	MAX	UNIT
V_{REF+}	Positive built-in reference voltage	REFVSEL = {2} for 2.5 V, REFON = 1	3 V	2.47	2.51	2.55	V
		REFVSEL = {1} for 2 V, REFON = 1		1.96	1.99	2.02	
		REFVSEL = {0} for 1.5 V, REFON = 1	2.2 V, 3 V	1.48	1.5	1.52	
$AV_{CC(min)}$	AVCC minimum voltage, Positive built-in reference active	REFVSEL = {0} for 1.5 V		1.8			V
		REFVSEL = {1} for 2 V		2.2			
		REFVSEL = {2} for 2.5 V		2.7			
I_{REF+}	Operating supply current into AVCC terminal (1)	$f_{ADC10CLK}$ = 5.0 MHz, REFON = 1, REFBURST = 0, REFVSEL = {2} for 2.5 V	3 V		18	24	µA
		$f_{ADC10CLK}$ = 5.0 MHz, REFON = 1, REFBURST = 0, REFVSEL = {1} for 2 V			16.1	21	
		$f_{ADC10CLK}$ = 5.0 MHz, REFON = 1, REFBURST = 0, REFVSEL = {0} for 1.5 V			14.4	21	
TC_{REF+}	Temperature coefficient of built-in reference (2)	I_{VREF+} = 0 A, REFVSEL = {0, 1, 2}, REFON = 1			< 18	50	ppm/ °C
I_{SENSOR}	Operating supply current into AVCC terminal (3)	REFON = 0, INCH = 0Ah, ADC10ON = N/A, T_A = 30°C	2.2 V		17	22	µA
			3 V		17	22	
V_{SENSOR}	See (4)	ADC10ON = 1, INCH = 0Ah, T_A = 30°C	2.2 V		770		mV
			3 V		770		
V_{MID}	AV_{CC} divider at channel 11	ADC10ON = 1, INCH = 0Bh, $V_{MID} \approx 0.5 \times V_{AVCC}$	2.2 V	1.06	1.1	1.14	V
			3 V	1.46	1.5	1.54	
$t_{SENSOR(sample)}$	Sample time required if channel 10 is selected (5)	ADC10ON = 1, INCH = 0Ah, Error of conversion result ≤ 1 LSB		30			µs
$t_{VMID(sample)}$	Sample time required if channel 11 is selected (6)	ADC10ON = 1, INCH = 0Bh, Error of conversion result ≤ 1 LSB		1			µs
PSRR_DC	Power supply rejection ratio (DC)	$AV_{CC} = AV_{CC\ (min)}$ to $AV_{CC(max)}$, T_A = 25°C, REFVSEL = {0, 1, 2}, REFON = 1			120		µV/V
PSRR_AC	Power supply rejection ratio (AC)	$AV_{CC} = AV_{CC\ (min)}$ to $AV_{CC(max)}$, T_A = 25°C, f = 1 kHz, ΔVpp = 100 mV, REFVSEL = {0, 1, 2}, REFON = 1			6.4		mV/V
t_{SETTLE}	Settling time of reference voltage (7)	$AV_{CC} = AV_{CC\ (min)}$ to $AV_{CC(max)}$, REFVSEL = {0, 1, 2}, REFON = 0 → 1			75		µs
$V_{SD24REF}$	SD24_B internal reference voltage	SD24REFS = 1	3 V	1.151	1.1623	1.174	V
t_{ON}	SD24_B internal reference turnon time	SD24REFS = 0→1, C_{REF} = 100 nF	3 V		200		µs

(1) The internal reference current is supplied from the AVCC terminal. Consumption is independent of the ADC10ON control bit, unless a conversion is active. The REFON bit enables to settle the built-in reference before starting an analog-to-digital conversion.
(2) Calculated using the box method: (MAX(–40°C to 85°C) – MIN(–40°C to 85°C)) / MIN(–40°C to 85°C)/(85°C – (–40°C)).
(3) The sensor current I_{SENSOR} is consumed if (ADC10ON = 1 and REFON = 1) or (ADC10ON = 1 and INCH = 0Ah and sample signal is high). When REFON = 1, I_{SENSOR} is already included in I_{REF+}.
(4) The temperature sensor offset can be significant. TI recommends a single-point calibration to minimize the offset error of the built-in temperature sensor.
(5) The typical equivalent impedance of the sensor is 51 kΩ. The sample time required includes the sensor-on time $t_{SENSOR(on)}$.
(6) The on-time $t_{VMID(on)}$ is included in the sampling time $t_{VMID(sample)}$; no additional on time is needed.
(7) The condition is that the error in a conversion started after t_{REFON} is less than ±0.5 LSB.

Copyright © 2014–2018, Texas Instruments Incorporated

5.19 Comparator_B

Table 5-52 lists the characteristics of the comparator.

Table 5-52. Comparator_B

over recommended ranges of supply voltage and operating free-air temperature (unless otherwise noted)

PARAMETER		TEST CONDITIONS	V_{CC}	MIN	TYP	MAX	UNIT
V_{CC}	Supply voltage			1.8		3.6	V
I_{AVCC_COMP}	Comparator operating supply current into AVCC, excludes reference resistor ladder	CBPWRMD = 00, CBON = 1, CBRSx = 00	1.8 V			40	µA
			2.2 V		22	50	
			3 V		32	65	
		CBPWRMD = 01, CBON = 1, CBRSx = 00	2.2 V, 3 V		10	30	
		CBPWRMD = 10, CBON = 1, CBRSx = 00			0.2	0.85	
I_{AVCC_REF}	Quiescent current of resistor ladder into AVCC, includes REF module current	CBREFACC = 1, CBREFLx = 01, CBRSx = 10, REFON = 0, CBON = 0	2.2 V, 3 V		10	22	µA
		CBREFACC = 0, CBREFLx = 01, CBRSx = 10, REFON = 0, CBON = 0			33	40	
V_{IC}	Common-mode input range			0		V_{CC} – 1	V
V_{OFFSET}	Input offset voltage	CBPWRMD = 00		–20		20	mV
		CBPWRMD = 01 or 10		–20		20	
C_{IN}	Input capacitance				5		pF
R_{SIN}	Series input resistance	On (switch closed)			3	4	kΩ
		Off (switch open)		50			MΩ
t_{PD}	Propagation delay, response time	CBPWRMD = 00, CBF = 0				450	ns
		CBPWRMD = 01, CBF = 0				600	
		CBPWRMD = 10, CBF = 0				50	µs
$t_{PD,filter}$	Propagation delay with filter active	CBPWRMD = 00, CBON = 1, CBF = 1, CBFDLY = 00		0.30	0.6	1.5	µs
		CBPWRMD = 00, CBON = 1, CBF = 1, CBFDLY = 01		0.5	1.0	1.8	
		CBPWRMD = 00, CBON = 1, CBF = 1, CBFDLY = 10		0.8	1.8	3.4	
		CBPWRMD = 00, CBON = 1, CBF = 1, CBFDLY = 11		1.5	3.4	6.5	
t_{EN_CMP}	Comparator enable time	CBON = 0 to CBON = 1, CBPWRMD = 00 or 01			1	2	µs
		CBON = 0 to CBON = 1, CBPWRMD = 10				100	
t_{EN_REF}	Resistor reference enable time	CBON = 0 to CBON = 1			1.0	1.5	µs
TC_{REF}	Temperature coefficient reference					50	ppm/°C
V_{CB_REF}	Reference voltage for a given tap	VIN = reference into resistor ladder, n = 0 to 31		VIN × (n + 1.5) / 32	VIN × (n + 1) / 32	VIN × (n + 0.5) / 32	V

5.20 Flash

Table 5-53 lists the characteristics of the flash memory.

Table 5-53. Flash Memory

over recommended ranges of supply voltage and operating free-air temperature (unless otherwise noted)

PARAMETER		T_J	MIN	TYP	MAX	UNIT
$DV_{CC(PGM/ERASE)}$	Program and erase supply voltage		1.8		3.6	V
I_{PGM}	Average supply current from DVCC during program			3	5	mA
I_{ERASE}	Average supply current from DVCC during erase			6	15	mA
I_{MERASE}, I_{BANK}	Average supply current from DVCC during mass erase or bank erase			6	15	mA
t_{CPT}	Cumulative program time(1)				16	ms
	Program and erase endurance		10^4	10^5		cycles
$t_{Retention}$	Data retention duration	25°C	100			years
t_{Word}	Word or byte program time(2)		64		85	µs
$t_{Block, 0}$	Block program time for first byte or word(2)		49		65	µs
$t_{Block, 1–(N–1)}$	Block program time for each additional byte or word, except for last byte or word(2)		37		49	µs
$t_{Block, N}$	Block program time for last byte or word(2)		55		73	µs
t_{Erase}	Erase time for segment erase, mass erase, and bank erase when available(2)		23		32	ms
$f_{MCLK,MGR}$	MCLK frequency in marginal read mode (FCTL4.MGR0 = 1 or FCTL4. MGR1 = 1)		0		1	MHz

(1) The cumulative program time must not be exceeded when writing to a 128-byte flash block. This parameter applies to all programming methods: individual word or byte write and block write modes.
(2) These values are hardwired into the state machine of the flash controller.

5.21 Emulation and Debug

Table 5-54 lists the characteristics of the JTAG and SBW interface.

Table 5-54. JTAG and Spy-Bi-Wire (SBW) Interface

over recommended ranges of supply voltage and operating free-air temperature (unless otherwise noted)

PARAMETER		V_{CC}	MIN	TYP	MAX	UNIT
f_{SBW}	Spy-Bi-Wire input frequency	2.2 V, 3 V	0		20	MHz
$t_{SBW,Low}$	Spy-Bi-Wire low clock pulse duration	2.2 V, 3 V	0.025		15	µs
$t_{SBW, En}$	Spy-Bi-Wire enable time (TEST high to acceptance of first clock edge)(1)	2.2 V, 3 V			1	µs
$t_{SBW,Rst}$	Spy-Bi-Wire return to normal operation time		15		100	µs
f_{TCK}	TCK input frequency for 4-wire JTAG(2)	2.2 V	0		5	MHz
		3 V	0		10	MHz
$R_{internal}$	Internal pulldown resistance on TEST	2.2 V, 3 V	45	60	80	kΩ

(1) Tools that access the Spy-Bi-Wire interface must wait for the minimum $t_{SBW,En}$ time after pulling the TEST/SBWTCK pin high before applying the first SBWTCK clock edge.
(2) f_{TCK} may be restricted to meet the timing requirements of the module selected.

Copyright © 2014–2018, Texas Instruments Incorporated

6 Detailed Description

6.1 Overview

The TI MSP430F67xx1A family of polyphase metering SoCs are powerful highly-integrated solutions for revenue meters that offer accuracy and low system cost with few external components. The MSP430F67xx1A uses the low-power MSP430 CPU with a 32-bit multiplier to perform all energy calculations, metering applications such as tariff rate management, and communications with AMR and AMI modules.

6.2 Functional Block Diagrams

Figure 6-1 shows the functional block diagram for the MSP430F677x1A, MSP430F676x1A, and MSP430F674x1A devices in the PEU package.

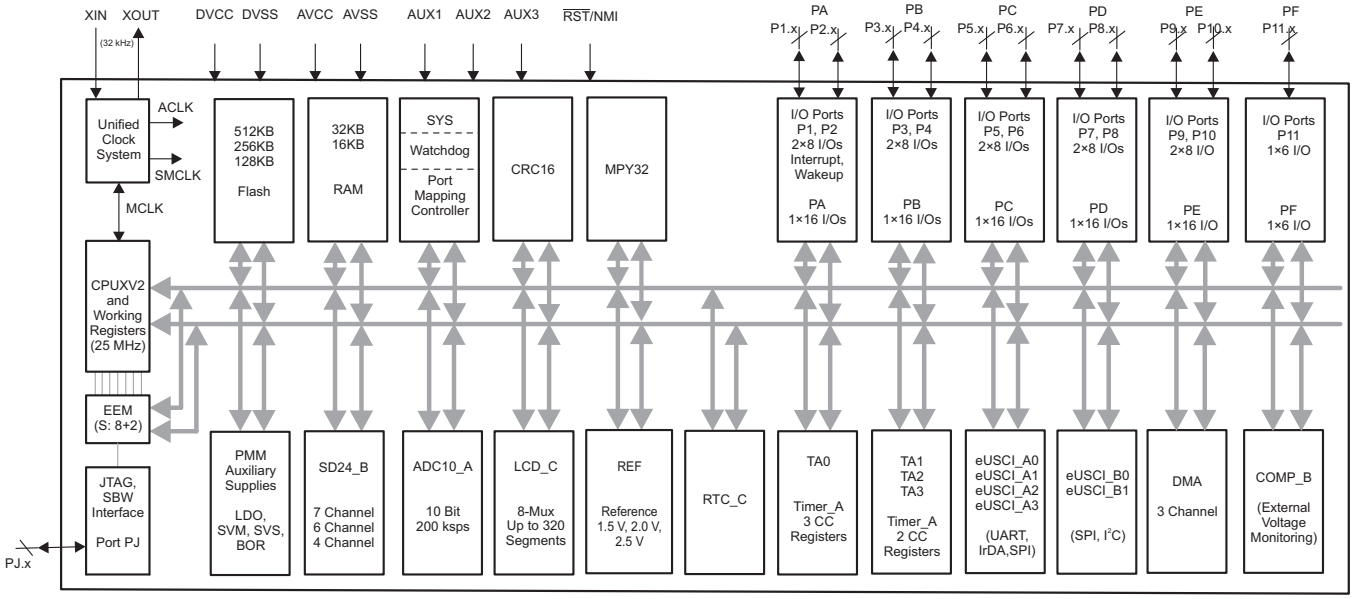

Copyright © 2016, Texas Instruments Incorporated

Figure 6-1. Functional Block Diagram – PEU Package

Figure 6-2 shows the functional block diagram for the MSP430F677x1A, MSP430F676x1A, and MSP430F674x1A devices in the PZ package.

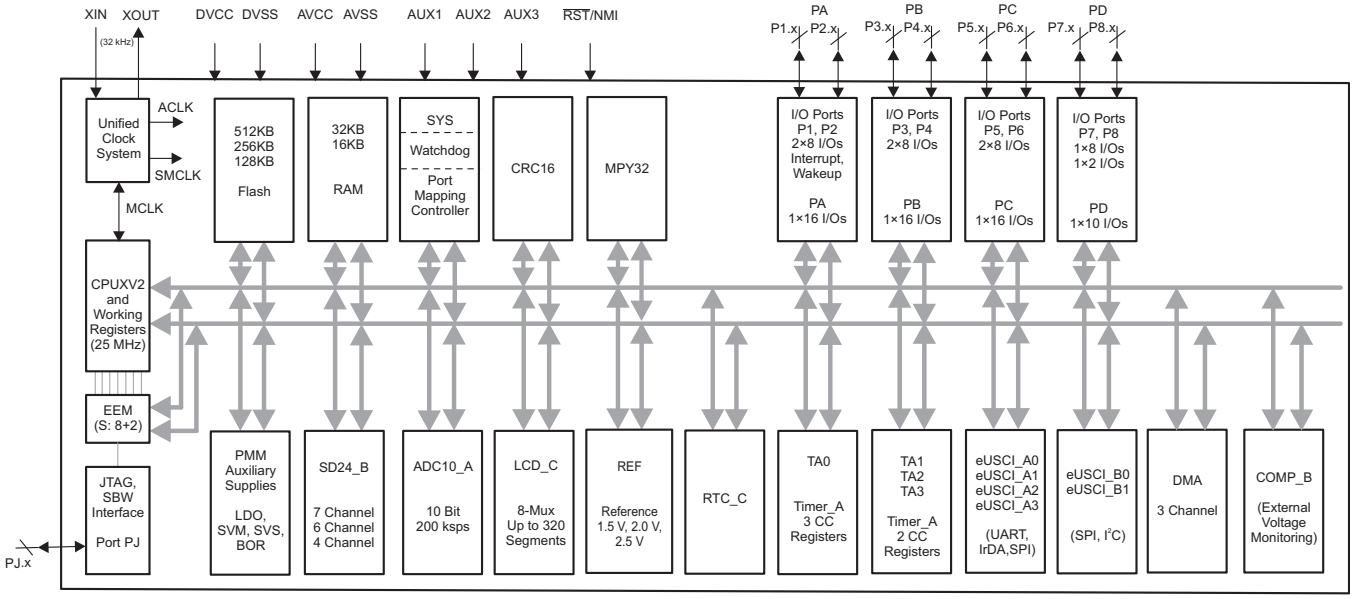

Copyright © 2016, Texas Instruments Incorporated

Figure 6-2. Functional Block Diagram – PZ Package

6.3 CPU (Link to User's Guide)

The MSP430 CPU has a 16-bit RISC architecture that is highly transparent to the application. All operations, other than program-flow instructions, are performed as register operations in conjunction with seven addressing modes for source operand and four addressing modes for destination operand.

The CPU is integrated with 16 registers that provide reduced instruction execution time. The register-to-register operation execution time is one cycle of the CPU clock. Four of the registers, R0 to R3, are dedicated as program counter, stack pointer, status register, and constant generator, respectively. The remaining registers are general-purpose registers (see Figure 6-3).

Peripherals are connected to the CPU using data, address, and control buses. Peripherals can be managed with all instructions.

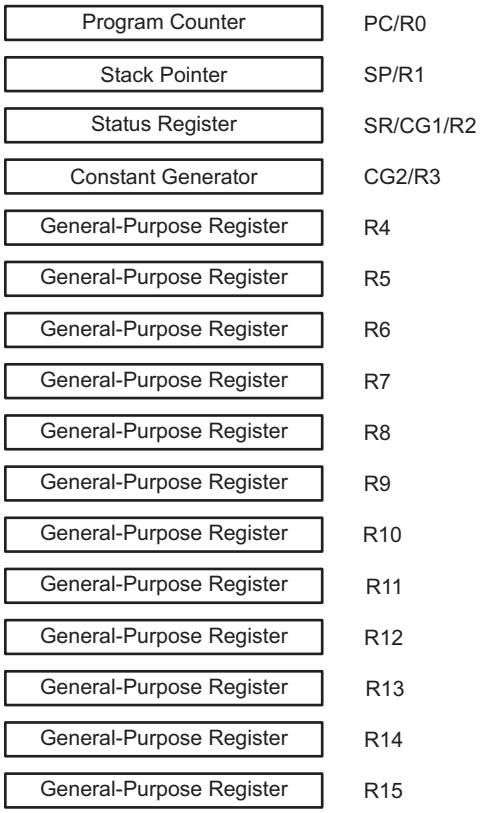

Figure 6-3. CPU Registers

6.4 Instruction Set

The instruction set consists of the original 51 instructions with three formats and seven address modes and additional instructions for the expanded address range. Each instruction can operate on word and byte data. Table 6-1 lists examples of the three types of instruction formats. Table 6-2 lists the address modes.

Table 6-1. Instruction Word Formats

INSTRUCTION WORD FORMAT	EXAMPLE	OPERATION
Dual operands, source and destination	ADD R4,R5	R4 + R5 → R5
Single operands, destination only	CALL R8	PC → (TOS), R8 → PC
Relative jump, conditional or unconditional	JNE	Jump-on-equal bit = 0

Table 6-2. Address Mode Descriptions

ADDRESS MODE	S(1)	D(1)	SYNTAX	EXAMPLE	OPERATION
Register	✓	✓	MOV Rs,Rd	MOV R10,R11	R10 → R11
Indexed	✓	✓	MOV X(Rn),Y(Rm)	MOV 2(R5),6(R6)	M(2+R5) → M(6+R6)
Symbolic (PC relative)	✓	✓	MOV EDE,TONI		M(EDE) → M(TONI)
Absolute	✓	✓	MOV & MEM, & TCDAT		M(MEM) → M(TCDAT)
Indirect	✓		MOV @Rn,Y(Rm)	MOV @R10,Tab(R6)	M(R10) → M(Tab+R6)
Indirect autoincrement	✓		MOV @Rn+,Rm	MOV @R10+,R11	M(R10) → R11 R10 + 2 → R10
Immediate	✓		MOV #X,TONI	MOV #45,TONI	#45 → M(TONI)

(1) S = source, D = destination

Copyright © 2014–2018, Texas Instruments Incorporated

6.5 Operating Modes

These microcontrollers have one active mode and six software-selectable low-power modes of operation. An interrupt event can wake up the device from any of the five low-power modes, service the request, and restore back to the low-power mode on return from the interrupt program.

Software can configure the following operating modes:

- Active mode (AM)
  - All clocks are active
- Low-power mode 0 (LPM0)
  - CPU is disabled
  - ACLK and SMCLK remain active, MCLK is disabled
  - FLL loop control remains active
- Low-power mode 1 (LPM1)
  - CPU is disabled
  - FLL loop control is disabled
  - ACLK and SMCLK remain active, MCLK is disabled
- Low-power mode 2 (LPM2)
  - CPU is disabled
  - MCLK and FLL loop control and DCOCLK are disabled
  - DC generator of the DCO remains enabled
  - ACLK remains active
- Low-power mode 3 (LPM3)
  - CPU is disabled
  - MCLK, FLL loop control, and DCOCLK are disabled
  - DC generator of the DCO is disabled
  - ACLK remains active
- Low-power mode 4 (LPM4)
  - CPU is disabled
  - ACLK is disabled
  - MCLK, FLL loop control, and DCOCLK are disabled
  - DC generator of the DCO is disabled
  - Crystal oscillator is stopped
  - Complete data retention
- Low-power mode 3.5 (LPM3.5)
  - Internal regulator disabled
  - No RAM retention, backup RAM retained
  - I/O pad state retention
  - RTC clocked by low-frequency oscillator
  - Wake-up input from $\overline{\text{RST}}$/NMI, RTC_C events, port P1, or port P2
- Low-power mode 4.5 (LPM4.5)
  - Internal regulator disabled
  - No RAM retention, backup RAM retained
  - RTC is disabled
  - I/O pad state retention
  - Wake-up input from $\overline{\text{RST}}$/NMI, port P1, or port P2

6.6 Interrupt Vector Addresses

The interrupt vectors and the power-up start address are in the address range 0FFFFh to 0FF80h (see Table 6-3). The vector contains the 16-bit address of the appropriate interrupt-handler instruction sequence.

Table 6-3. Interrupt Sources, Flags, and Vectors

INTERRUPT SOURCE	INTERRUPT FLAG	SYSTEM INTERRUPT	WORD ADDRESS	PRIORITY
System Reset Power up External reset Watchdog time-out, key violation Flash memory key violation	WDTIFG, KEYV (SYSRSTIV)(1) (2)	Reset	0FFFEh	63, highest
System NMI PMM Vacant memory access JTAG mailbox	SVMLIFG, SVMHIFG, DLYLIFG, DLYHIFG, VLRLIFG, VLRHIFG, VMAIFG, JMBINIFG, JMBOUTIFG (SYSSNIV) (1) (3)	(Non)maskable	0FFFCh	62
User NMI NMI Oscillator fault Flash memory access violation Supply switched	NMIIFG, OFIFG, ACCVIFG, AUXSWGIFG (SYSUNIV)(1) (3)	(Non)maskable	0FFFAh	61
Watchdog Timer_A interval timer mode	WDTIFG	Maskable	0FFF8h	60
eUSCI_A0 receive or transmit	UCA0RXIFG, UCA0TXIFG (UCA0IV)(1) (4)	Maskable	0FFF6h	59
eUSCI_B0 receive or transmit	UCB0RXIFG, UCB0TXIFG (UCB0IV)(1) (4)	Maskable	0FFF4h	58
ADC10_A	ADC10IFG0, ADC10INIFG, ADC10LOIFG, ADC10HIIFG, ADC10TOVIFG, ADC10OVIFG (ADC10IV)(1) (4)	Maskable	0FFF2h	57
SD24_B	SD24_B Interrupt Flags (SD24IV)(1) (4)	Maskable	0FFF0h	56
Timer TA0	TA0CCR0 CCIFG0(4)	Maskable	0FFEEh	55
Timer TA0	TA0CCR1 CCIFG1, TA0CCR2 CCIFG2, TA0IFG (TA0IV)(1) (4)	Maskable	0FFECh	54
eUSCI_A1 receive or transmit	UCA1RXIFG, UCA1TXIFG (UCA1IV)(1) (4)	Maskable	0FFEAh	53
eUSCI_A2 receive or transmit	UCA2RXIFG, UCA2TXIFG (UCA2IV)(1) (4)	Maskable	0FFE8h	52
Auxiliary supplies	AUXSWGIFG, AUXIFG0, AUXIFG1, AUXIFG2 (AUXIV)(1) (4)	Maskable	0FFE6h	51
DMA	DMA0IFG, DMA1IFG, DMA2IFG (DMAIV)(1) (4)	Maskable	0FFE4h	50
Timer TA1	TA1CCR0 CCIFG0(4)	Maskable	0FFE2h	49
Timer TA1	TA1CCR1 CCIFG1, TA1IFG (TA1IV)(1) (4)	Maskable	0FFE0h	48
eUSCI_A3 receive or transmit	UCA3RXIFG, UCA3TXIFG (UCA3IV)(1) (4)	Maskable	0FFDEh	47
eUSCI_B1 receive or transmit	UCB1RXIFG, UCB1TXIFG (UCB1IV)(1) (4)	Maskable	0FFDCh	46
I/O port P1	P1IFG.0 to P1IFG.7 (P1IV)(1) (4)	Maskable	0FFDAh	45
Timer TA2	TA2CCR0 CCIFG0(4)	Maskable	0FFD8h	44
Timer TA2	TA2CCR1 CCIFG1, TA2IFG (TA2IV)(1) (4)	Maskable	0FFD6h	43
I/O port P2	P2IFG.0 to P2IFG.7 (P2IV)(1) (4)	Maskable	0FFD4h	42
Timer TA3	TA3CCR0 CCIFG0(4)	Maskable	0FFD2h	41
Timer TA3	TA3CCR1 CCIFG1, TA3IFG (TA3IV)(1) (4)	Maskable	0FFD0h	40
LCD_C	LCD_C Interrupt Flags (LCDCIV)(1) (4)	Maskable	0FFCEh	39

(1) Multiple source flags
(2) A reset is generated if the CPU tries to fetch instructions from within peripheral space or vacant memory space.
(3) (Non)maskable: the individual interrupt enable bit can disable an interrupt event, but the general interrupt enable bit cannot disable it.
(4) Interrupt flags are in the module.

Copyright © 2014–2018, Texas Instruments Incorporated

Table 6-3. Interrupt Sources, Flags, and Vectors (continued)

INTERRUPT SOURCE	INTERRUPT FLAG	SYSTEM INTERRUPT	WORD ADDRESS	PRIORITY
RTC_C	RTCOFIFG, RTCRDYIFG, RTCTEVIFG, RTCAIFG, RT0PSIFG, RT1PSIFG (RTCIV) (1) (4)	Maskable	0FFCCh	38
Comparator_B	Comparator_B Interrupt Flags (CBIV) (1)	Maskable	0FFCAh	37
Reserved	Reserved (5)		0FFC6h	35
			⋮	⋮
			0FF80h	0, lowest

(5) Reserved interrupt vectors at addresses are not used in this device and can be used for regular program code if necessary. To maintain compatibility with other devices, TI recommends reserving these locations.

6.7 Special Function Registers (SFRs)

The SFRs are in the lowest address space and can be accessed in word or byte formats.

Legend

rw	Bit can be read and written.
rw-0, rw-1	Bit can be read and written. It is reset or set by PUC.
rw-(0), rw-(1)	Bit can be read and written. It is reset or set by POR.
rw-[0], rw-[1]	Bit can be read and written. It is reset or set by BOR.
–	SFR bit is not present in device.

Figure 6-4. Interrupt Enable 1 Register

15	14	13	12	11	10	9	8
–	–	–	–	–	–	AUXSWNMIE	–
rw-0							
7	6	5	4	3	2	1	0
JMBOUTIE	JMBINIE	ACCVIE	NMIIE	VMAIE	–	OFIE	WDTIE
rw-0	rw-0	rw-0	rw-0	rw-0		rw-0	rw-0

Table 6-4. Interrupt Enable 1 Register Description

Bit	Field	Type	Reset	Description
9	AUXSWNMIE	RW	0h	Supply switched nonmaskable interrupt enable
7	JMBOUTIE	RW	0h	JTAG mailbox output interrupt enable
6	JMBINIE	RW	0h	JTAG mailbox input interrupt enable
5	ACCVIE	RW	0h	Flash access violation interrupt enable
4	NMIIE	RW	0h	Nonmaskable interrupt enable
3	VMAIE	RW	0h	Vacant memory access interrupt enable
1	OFIE	RW	0h	Oscillator fault interrupt enable
0	WDTIE	RW	0h	Watchdog timer interrupt enable. Inactive if watchdog mode is selected. Active if watchdog timer is configured as a general-purpose timer.

Figure 6-5. Interrupt Flag 1 Register

15	14	13	12	11	10	9	8
–	–	–	–	–	–	–	–
7	6	5	4	3	2	1	0
JMBOUTIFG	JMBINIFG	–	NMIIFG	VMAIFG	–	OFIFG	WDTIFG
rw-[0]	rw-[0]		rw-0	rw-0		rw-0	rw-0

Table 6-5. Interrupt Flag 1 Register Description

Bit	Field	Type	Reset	Description
7	JMBOUTIFG	RW	0h	Set on JTAG mailbox output register ready for next message
6	JMBINIFG	RW	0h	Set on JTAG mailbox input message
4	NMIIFG	RW	0h	Set by $\overline{\text{RST}}$/NMI pin
3	VMAIFG	RW	0h	Set on vacant memory access
1	OFIFG	RW	0h	Flag set on oscillator fault
0	WDTIFG	RW	0h	Set on watchdog timer overflow (in watchdog mode) or security key violation. Reset on V_{CC} power-on or a reset condition at the $\overline{\text{RST}}$/NMI pin in reset mode.

6.8 Bootloader (BSL)

The BSL enables users to program the flash memory or RAM using various serial interfaces.Table 6-6 lists the BSL interface pin requirements. Access to the device memory by the BSL is protected by an user-defined password. BSL entry requires a specific entry sequence on the $\overline{\text{RST}}$/NMI/SBWTDIO and TEST/SBWTCK pins. For a complete description of the features of the BSL and its implementation, see the *MSP430™ Flash Device Bootloader (BSL) User's Guide*.

Table 6-6. UART BSL Pin Requirements and Functions

DEVICE SIGNAL	BSL FUNCTION
$\overline{\text{RST}}$/NMI/SBWTDIO	Entry sequence signal
TEST/SBWTCK	Entry sequence signal
P2.0	Data transmit
P2.1	Data receive
DVCC	Power supply
DVSS	Ground supply

Copyright © 2014–2018, Texas Instruments Incorporated

6.9 JTAG Operation

6.9.1 JTAG Standard Interface

The MSP430 family supports the standard JTAG interface which requires four signals for sending and receiving data. The JTAG signals are shared with general-purpose I/O. The TEST/SBWTCK pin is used to enable the JTAG signals. In addition to these signals, the $\overline{\text{RST}}$/NMI/SBWTDIO is required to interface with MSP430 development tools and device programmers. Table 6-7 lists the JTAG interface pin requirements. For further details on interfacing to development tools and device programmers, see the *MSP430 Hardware Tools User's Guide*. For a complete description of the features of the JTAG interface and its implementation, see *MSP430 Programming With the JTAG Interface*.

Table 6-7. JTAG Pin Requirements and Functions

DEVICE SIGNAL	DIRECTION	FUNCTION
PJ.3/TCK	IN	JTAG clock input
PJ.2/TMS	IN	JTAG state control
PJ.1/TDI/TCLK	IN	JTAG data input, TCLK input
PJ.0/TDO	OUT	JTAG data output
TEST/SBWTCK	IN	Enable JTAG pins
$\overline{\text{RST}}$/NMI/SBWTDIO	IN	External reset
DVCC		Power supply
DVSS		Ground supply

6.9.2 Spy-Bi-Wire Interface

In addition to the standard JTAG interface, the MSP430 family supports the 2-wire Spy-Bi-Wire interface. Spy-Bi-Wire can be used to interface with MSP430 development tools and device programmers. Table 6-8 lists the Spy-Bi-Wire interface pin requirements. For further details on interfacing to development tools and device programmers, see the *MSP430 Hardware Tools User's Guide*. For a complete description of the features of the JTAG interface and its implementation, see *MSP430 Programming With the JTAG Interface*.

Table 6-8. Spy-Bi-Wire Pin Requirements and Functions

DEVICE SIGNAL	DIRECTION	FUNCTION
TEST/SBWTCK	IN	Spy-Bi-Wire clock input
$\overline{\text{RST}}$/NMI/SBWTDIO	IN, OUT	Spy-Bi-Wire data input and output
DVCC		Power supply
DVSS		Ground supply

Copyright © 2014–2018, Texas Instruments Incorporated

6.10 Memory

6.10.1 Memory Organization

Table 6-9 summarizes the memory map of the MSP430F67x91A, MSP430F67x81A, and MSP430F67x71A devices.

Table 6-9. Memory Organization – MSP430F67x91A, MSP430F67x81A, and MSP430F67x71A

		MSP430F67791A MSP430F67691A MSP430F67491A	MSP430F67781A MSP430F67681A MSP430F67481A	MSP430F67771A MSP430F67671A MSP430F67471A
Main memory (flash)	Total Size	512KB	512KB	256KB
Main: interrupt vector		00FFFFh to 00FF80h	00FFFFh to 00FF80h	00FFFFh to 00FF80h
Main: code memory	Bank 3	128KB 08BFFFh to 06C000h	128KB 08BFFFh to 06C000h	Not available
	Bank 2	128KB 06BFFFh to 04C000h	128KB 06BFFFh to 04C000h	Not available
	Bank 1	128KB 04BFFFh to 02C000h	128KB 04BFFFh to 02C000h	128KB 04BFFFh to 02C000h
	Bank 0	128KB 02BFFFh to 00C000h	128KB 02BFFFh to 00C000h	128KB 02BFFFh to 00C000h
RAM	Total Size	32KB	16KB	32KB
	Sector 7	4KB 009BFFh to 008C00h	Not available	4KB 009BFFh to 008C00h
	Sector 6	4KB 008BFFh to 007C00h	Not available	4KB 008BFFh to 007C00h
	Sector 5	4KB 007BFFh to 006C00h	Not available	4KB 007BFFh to 006C00h
	Sector 4	4KB 006BFFh to 005C00h	Not available	4KB 006BFFh to 005C00h
	Sector 3	4KB 005BFFh to 004C00h	4KB 005BFFh to 004C00h	4KB 005BFFh to 004C00h
	Sector 2	4KB 004BFFh to 003C00h	4KB 004BFFh to 003C00h	4KB 004BFFh to 003C00h
	Sector 1	4KB 003BFFh to 002C00h	4KB 003BFFh to 002C00h	4KB 003BFFh to 002C00h
	Sector 0	4KB 002BFFh to 001C00h	4KB 002BFFh to 001C00h	4KB 002BFFh to 001C00h
Device descriptor		128 B 001AFFh to 001A80h	128 B 001AFFh to 001A80h	128 B 001AFFh to 001A80h
		128 B 001A7Fh to 001A00h	128 B 001A7Fh to 001A00h	128 B 001A7Fh to 001A00h
Information memory (flash)	Info A	128 B 0019FFh to 001980h	128 B 0019FFh to 001980h	128 B 0019FFh to 001980h
	Info B	128 B 00197Fh to 001900h	128 B 00197Fh to 001900h	128 B 00197Fh to 001900h
	Info C	128 B 0018FFh to 001880h	128 B 0018FFh to 001880h	128 B 0018FFh to 001880h
	Info D	128 B 00187Fh to 001800h	128 B 00187Fh to 001800h	128 B 00187Fh to 001800h
Bootloader (BSL) memory (flash)	BSL 3	512 B 0017FFh to 001600h	512 B 0017FFh to 001600h	512 B 0017FFh to 001600h
	BSL 2	512 B 0015FFh to 001400h	512 B 0015FFh to 001400h	512 B 0015FFh to 001400h
	BSL 1	512 B 0013FFh to 001200h	512 B 0013FFh to 001200h	512 B 0013FFh to 001200h
	BSL 0	512 B 0011FFh to 001000h	512 B 0011FFh to 001000h	512 B 0011FFh to 001000h

Copyright © 2014–2018, Texas Instruments Incorporated

Table 6-9. Memory Organization – MSP430F67x91A, MSP430F67x81A, and MSP430F67x71A (continued)

		MSP430F67791A MSP430F67691A MSP430F67491A	MSP430F67781A MSP430F67681A MSP430F67481A	MSP430F67771A MSP430F67671A MSP430F67471A
Peripherals		4KB 000FFFh to 0h	4KB 000FFFh to 0h	4KB 000FFFh to 0h

Table 6-10 summarizes the memory map of the MSP430F67x61A and MSP430F67x51A devices.

Table 6-10. Memory Organization – MSP430F67x61A and MSP430F67x51A

		MSP430F67761A MSP430F67661A MSP430F67461A	MSP430F67751A MSP430F67651A MSP430F67451A
Main memory (flash)	Total Size	256KB	128KB
Main: interrupt vector		00FFFFh to 00FF80h	00FFFFh to 00FF80h
Main: code memory	Bank 3	Not available	Not available
	Bank 2	Not available	Not available
	Bank 1	128KB 04BFFFh to 02C000h	Not available
	Bank 0	128KB 02BFFFh to 00C000h	128KB 02BFFFh to 00C000h
RAM	Total Size	16KB	16KB
	Sector 7	Not available	Not available
	Sector 6	Not available	Not available
	Sector 5	Not available	Not available
	Sector 4	Not available	Not available
	Sector 3	4KB 005BFFh to 004C00h	4KB 005BFFh to 004C00h
	Sector 2	4KB 004BFFh to 003C00h	4KB 004BFFh to 003C00h
	Sector 1	4KB 003BFFh to 002C00h	4KB 003BFFh to 002C00h
	Sector 0	4KB 002BFFh to 001C00h	4KB 002BFFh to 001C00h
Device descriptor		128 B 001AFFh to 001A80h	128 B 001AFFh to 001A80h
		128 B 001A7Fh to 001A00h	128 B 001A7Fh to 001A00h
Information memory (flash)	Info A	128 B 0019FFh to 001980h	128 B 0019FFh to 001980h
	Info B	128 B 00197Fh to 001900h	128 B 00197Fh to 001900h
	Info C	128 B 0018FFh to 001880h	128 B 0018FFh to 001880h
	Info D	128 B 00187Fh to 001800h	128 B 00187Fh to 001800h
Bootloader (BSL) memory (flash)	BSL 3	512 B 0017FFh to 001600h	512 B 0017FFh to 001600h
	BSL 2	512 B 0015FFh to 001400h	512 B 0015FFh to 001400h
	BSL 1	512 B 0013FFh to 001200h	512 B 0013FFh to 001200h
	BSL 0	512 B 0011FFh to 001000h	512 B 0011FFh to 001000h
Peripherals		4KB 000FFFh to 0h	4KB 000FFFh to 0h

6.10.2 Flash Memory (Link to User's Guide)

The flash memory can be programmed through the JTAG port, Spy-Bi-Wire (SBW), the BSL, or in-system by the CPU. The CPU can perform single-byte, single-word, and long-word writes to the flash memory. Features of the flash memory include:

- Flash memory has n segments of main memory and four segments of information memory (A to D) of 128 bytes each. Each segment in main memory is 512 bytes in size.
- Segments 0 to n may be erased in one step, or each segment may be individually erased.
- Segments A to D can be erased individually, or as a group with segments 0 to n. Segments A to D are also called *information memory*.
- Segment A can be locked separately.

6.10.3 RAM (Link to User's Guide)

The RAM is made up of n sectors. Each sector can be completely powered down to save leakage; however, all data are lost in the sector that is powered down. Features of the RAM include:

- RAM has n sectors of 4KB each.
- Each sector 0 to n can be completely disabled; however, data retention is lost in the disabled sector.
- Each sector 0 to n automatically enters low-power retention mode when possible.

6.10.4 Backup RAM (Link to User's Guide)

The backup RAM provides a limited number of bytes of RAM that are retained during LPM3.5. This backup RAM is part of the backup subsystem that operates on dedicated power supply AUXVCC3. Eight bytes of backup RAM are available in this device. The backup RAM can be word-wise accessed using the registers BAKMEM0, BAKMEM1, BAKMEM2, and BAKMEM3. The backup RAM registers cannot be accessed by CPU when the high-side SVS is disabled by the user application.

Copyright © 2014–2018, Texas Instruments Incorporated

6.11 Peripherals

Peripherals are connected to the CPU through data, address, and control buses. Peripherals can be controlled using all instructions. For complete module descriptions, see the *MSP430x5xx and MSP430x6xx Family User's Guide*.

6.11.1 Oscillator and System Clock (Link to User's Guide)

The Unified Clock System (UCS) module includes support for a 32768-Hz watch crystal oscillator, an internal very-low-power low-frequency oscillator (VLO), an internal trimmed low-frequency oscillator (REFO), and an integrated internal digitally controlled oscillator (DCO). The UCS module is designed to meet the requirements of both low system cost and low power consumption. The UCS module features digital frequency-locked loop (FLL) hardware that, in conjunction with a digital modulator, stabilizes the DCO frequency to a programmable multiple of the selected FLL reference frequency. The internal DCO provides a fast turnon clock source and stabilizes in less than 5 µs. The UCS module provides the following clock signals:

- Auxiliary clock (ACLK), sourced from a 32768-Hz watch crystal, the internal low-frequency oscillator (VLO), or the trimmed low-frequency oscillator (REFO).
- Main clock (MCLK), the system clock used by the CPU. MCLK can be sourced by same sources made available to ACLK.
- Sub-Main clock (SMCLK), the subsystem clock used by the peripheral modules. SMCLK can be sourced by same sources made available to ACLK.
- ACLK/n, the buffered output of ACLK, ACLK/2, ACLK/4, ACLK/8, ACLK/16, ACLK/32.

6.11.2 Power-Management Module (PMM) (Link to User's Guide)

The PMM includes an integrated voltage regulator that supplies the core voltage to the device and contains programmable output levels to provide for power optimization. The PMM also includes supply voltage supervisor (SVS) and supply voltage monitoring (SVM) circuitry, as well as brownout protection. The brownout circuit is implemented to provide the proper internal reset signal to the device during power on and power off. The SVS and SVM circuitry detects if the supply voltage drops below a user-selectable level and supports both supply voltage supervision (the device is automatically reset) and supply voltage monitoring (the device is not automatically reset). SVS and SVM circuitry is available on the primary supply and core supply.

6.11.3 Auxiliary-Supply System (Link to User's Guide)

The auxiliary supply system provides the option to operate the device from auxiliary supplies when the primary supply fails. There are two auxiliary supplies (AUXVCC1 and AUXVCC2) supported in MSP430F67xx. This module supports automatic and manual switching from primary supply to auxiliary supplies while maintaining full functionality. The auxiliary supply system allows threshold-based monitoring of primary and auxiliary supplies. The device can be started from primary supply or AUXVCC1, whichever is higher. Auxiliary supply system enables internal monitoring of voltage levels on primary and auxiliary supplies using ADC10_A. This module also implements a simple charger for backup capacitors.

6.11.4 Backup Subsystem

The backup subsystem operates on a dedicated power supply AUXVCC3. This subsystem includes low-frequency oscillator, real-time clock module, and backup RAM. The functionality of the backup subsystem is retained during LPM3.5. The backup subsystem module registers cannot be accessed by CPU when the high-side SVS is disabled by user.

6.11.5 Digital I/O (Link to User's Guide)

Up to eleven 8-bit I/O ports are implemented. For 128-pin options, ports P1 to P10 are complete, and port P11 is 6 bits wide. For 100-pin options, ports P1 to P7 are complete, port P8 is 2 bits wide, and ports P9, P10, and P11 are completely removed. Port PJ contains four individual I/O pins, common to all devices. All I/O bits are individually programmable.

- Any combination of input, output, and interrupt conditions is possible.
- Programmable pullup or pulldown on all ports.
- Programmable drive strength on all ports.
- Edge-selectable interrupt and LPM3.5, LPM4.5 wake-up input capability available for all bits of ports P1 and P2.
- Read-write access to port-control registers is supported by all instructions.
- Ports can be accessed byte-wise (P1 to P11) or word-wise in pairs (PA to PF).

6.11.6 Port Mapping Controller (Link to User's Guide)

The port mapping controller allows flexible and reconfigurable mapping of digital functions to ports P2, P3, and P4 (see Table 6-11). Table 6-12 lists the default settings for all pins that support port mapping.

Table 6-11. Port Mapping Mnemonics and Functions

VALUE	PxMAPy MNEMONIC	INPUT PIN FUNCTION	OUTPUT PIN FUNCTION
0	PM_NONE	None	DVSS
1	PM_UCA0RXD	eUSCI_A0 UART RXD (direction controlled by eUSCI – Input)	
	PM_UCA0SOMI	eUSCI_A0 SPI slave out master in (direction controlled by eUSCI)	
2	PM_UCA0TXD	eUSCI_A0 UART TXD (direction controlled by eUSCI – Output)	
	PM_UCA0SIMO	eUSCI_A0 SPI slave in master out (direction controlled by eUSCI)	
3	PM_UCA0CLK	eUSCI_A0 clock input/output (direction controlled by eUSCI)	
4	PM_UCA0STE	eUSCI_A0 SPI slave transmit enable (direction controlled by eUSCI)	
5	PM_UCA1RXD	eUSCI_A1 UART RXD (direction controlled by eUSCI – Input)	
	PM_UCA1SOMI	eUSCI_A1 SPI slave out master in (direction controlled by eUSCI)	
6	PM_UCA1TXD	eUSCI_A1 UART TXD (direction controlled by eUSCI – Output)	
	PM_UCA1SIMO	eUSCI_A1 SPI slave in master out (direction controlled by eUSCI)	
7	PM_UCA1CLK	eUSCI_A1 clock input/output (direction controlled by eUSCI)	
8	PM_UCA1STE	eUSCI_A1 SPI slave transmit enable (direction controlled by eUSCI)	
9	PM_UCA2RXD	eUSCI_A2 UART RXD (direction controlled by eUSCI – Input)	
	PM_UCA2SOMI	eUSCI_A2 SPI slave out master in (direction controlled by eUSCI)	
10	PM_UCA2TXD	eUSCI_A2 UART TXD (direction controlled by eUSCI – Output)	
	PM_ UCA2SIMO	eUSCI_A2 SPI slave in master out (direction controlled by eUSCI)	
11	PM_UCA2CLK	eUSCI_A2 clock input/output (direction controlled by eUSCI)	
12	PM_UCA2STE	eUSCI_A2 SPI slave transmit enable (direction controlled by eUSCI)	
13	PM_UCA3RXD	eUSCI_A3 UART RXD (direction controlled by eUSCI – Input)	
	PM_UCA3SOMI	eUSCI_A3 SPI slave out master in (direction controlled by eUSCI)	
14	PM_UCA3TXD	eUSCI_A3 UART TXD (direction controlled by eUSCI – Output)	
	PM_ UCA3SIMO	eUSCI_A3 SPI slave in master out (direction controlled by eUSCI)	
15	PM_UCA3CLK	eUSCI_A3 clock input/output (direction controlled by eUSCI)	
16	PM_UCA3STE	eUSCI_A3 SPI slave transmit enable (direction controlled by eUSCI)	
17	PM_UCB0SIMO	eUSCI_B0 SPI slave in master out (direction controlled by eUSCI)	
	PM_UCB0SDA	eUSCI_B0 I2C data (open drain and direction controlled by eUSCI)	
18	PM_UCB0SOMI	eUSCI_B0 SPI slave out master in (direction controlled by eUSCI)	
	PM_UCB0SCL	eUSCI_B0 I2C clock (open drain and direction controlled by eUSCI)	
19	PM_UCB0CLK	eUSCI_B0 clock input/output (direction controlled by eUSCI)	
20	PM_UCB0STE	eUSCI_B0 SPI slave transmit enable (direction controlled by eUSCI)	

Copyright © 2014–2018, Texas Instruments Incorporated

Table 6-11. Port Mapping Mnemonics and Functions (continued)

VALUE	PxMAPy MNEMONIC	INPUT PIN FUNCTION	OUTPUT PIN FUNCTION
21	PM_UCB1SIMO	eUSCI_B1 SPI slave in master out (direction controlled by eUSCI)	
	PM_UCB1SDA	eUSCI_B1 I2C data (open drain and direction controlled by eUSCI)	
22	PM_UCB1SOMI	eUSCI_B1 SPI slave out master in (direction controlled by eUSCI)	
	PM_UCB1SCL	eUSCI_B1 I2C clock (open drain and direction controlled by eUSCI)	
23	PM_UCB1CLK	eUSCI_B1 clock input/output (direction controlled by eUSCI)	
24	PM_UCB1STE	eUSCI_B1 SPI slave transmit enable (direction controlled by eUSCI)	
25	PM_TA0.0	TA0 CCR0 capture input CCI0A	TA0 CCR0 compare output Out0
26	PM_TA0.1	TA0 CCR1 capture input CCI1A	TA0 CCR1 compare output Out1
27	PM_TA0.2	TA0 CCR2 capture input CCI2A	TA0 CCR2 compare output Out2
28	PM_TA1.0	TA1 CCR0 capture input CCI0A	TA1 CCR0 compare output Out0
29	PM_TA2.0	TA2 CCR0 capture input CCI0A	TA2 CCR0 compare output Out0
30	PM_TA3.0	TA3 CCR0 capture input CCI0A	TA3 CCR0 compare output Out0
31 (0FFh) (1)	PM_ANALOG	Disables the output driver and the input Schmitt trigger to prevent parasitic cross currents when applying analog signals.	

(1) The value of the PM_ANALOG mnemonic is set to 0FFh. The port mapping registers are only 5 bits wide, and the upper bits are ignored, which results in a read value of 31.

Table 6-12. Default Port Mapping

PIN NAME		PxMAPy MNEMONIC	INPUT PIN FUNCTION	OUTPUT PIN FUNCTION
PEU	PZ			
P2.0/PM_TA0.0	P2.0/PM_TA0.0/COM4	PM_TA0.0	TA0 CCR0 capture input CCI0A	TA0 CCR0 compare output Out0
P2.1/PM_TA0.1	P2.1/PM_TA0.1/COM5	PM_TA0.1	TA0 CCR1 capture input CCI1A	TA0 CCR1 compare output Out1
P2.2/PM_TA0.2	P2.2/PM_TA0.2/COM6	PM_TA0.2	TA0 CCR2 capture input CCI2A	TA0 CCR2 compare output Out2
P2.3/PM_TA1.0	P2.3/PM_TA1.0/COM7	PM_TA1.0	TA1 CCR0 capture input CCI0A	TA1 CCR0 compare output Out0
P2.4/PM_TA2.0	P1.1/PM_TA2.0/R23	PM_TA2.0	TA2 CCR0 capture input CCI0A	TA2 CCR0 compare output Out0
P2.5/PM_UCB0SOMI/ PM_UCB0SCL	P2.0/PM_UCB0SOMI/ PM_UCB0SCL/R13	PM_UCB0SOMI/ PM_UCB0SCL	eUSCI_B0 SPI slave out master in (direction controlled by eUSCI), eUSCI_B0 I2C clock (open drain and direction controlled by eUSCI)	
P2.6/PM_UCB0SIMO/ PM_UCB0SDA	P2.6/PM_UCB0SIMO/ PM_UCB0SDA/R03	PM_UCB0SIMO/ PM_UCB0SDA	eUSCI_B0 SPI slave in master out (direction controlled by eUSCI), eUSCI_B0 I2C data (open drain and direction controlled by eUSCI)	
P2.7/PM_UCB0CLK	P2.7/PM_UCB0CLK/CB2	PM_UCB0CLK	eUSCI_B0 clock input/output (direction controlled by eUSCI)	
P3.0/PM_UCA0RXD/ PM_UCA0SOMI	P3.0/PM_UCA0RXD/ PM_UCA0SOMI	PM_UCA0RXD/ PM_UCA0SOMI	eUSCI_A0 UART RXD (direction controlled by eUSCI – input), eUSCI_A0 SPI slave out master in (direction controlled by eUSCI)	
P3.1/PM_UCA0TXD/ PM_UCA0SIMO	P3.1/PM_UCA0TXD/ PM_UCA0SIMO/S39	PM_UCA0TXD/ PM_UCA0SIMO	eUSCI_A0 UART TXD (direction controlled by eUSCI – output), eUSCI_A0 SPI slave in master out (direction controlled by eUSCI)	
P3.2/PM_UCA0CLK	P3.2/PM_UCA0CLK/S38	PM_UCA0CLK	eUSCI_A0 clock input/output (direction controlled by eUSCI)	
P3.3/PM_UCA1CLK	P3.3/PM_UCA1CLK/S37	PM_UCA1CLK	eUSCI_A1 clock input/output (direction controlled by eUSCI)	
P3.4/PM_UCA1RXD/ PM_UCA1SOMI/	P3.4/PM_UCA1RXD/ PM_UCA1SOMI/S36	PM_UCA1RXD/ PM_UCA1SOMI	eUSCI_A1 UART RXD (direction controlled by eUSCI – input), eUSCI_A1 SPI slave out master in (direction controlled by eUSCI)	
P3.5/PM_UCA1TXD/ PM_UCA1SIMO	P3.5/PM_UCA1TXD/ PM_UCA1SIMO/S35	PM_UCA1TXD/ PM_UCA1SIMO	eUSCI_A1 UART TXD (direction controlled by eUSCI – output), eUSCI_A1 SPI slave in master out (direction controlled by eUSCI)	
P3.6/PM_UCA2RXD/ PM_UCA2SOMI/	P3.6/PM_UCA2RXD/ PM_UCA2SOMI/S34	PM_UCA2RXD/ PM_UCA2SOMI	eUSCI_A2 UART RXD (direction controlled by eUSCI – input), eUSCI_A2 SPI slave out master in (direction controlled by eUSCI)	
P3.7/PM_UCA2TXD/ PM_UCA2SIMO	P3.7/PM_UCA2TXD/ PM_UCA2SIMO/S33	PM_UCA2TXD/ PM_UCA2SIMO	eUSCI_A2 UART TXD (direction controlled by eUSCI – output), eUSCI_A2 SPI slave in master out (direction controlled by eUSCI)	
P4.0/PM_UCA2CLK	P4.0/PM_UCA2CLK/S32	PM_UCA2CLK	eUSCI_A2 clock input/output (direction controlled by eUSCI)	
P4.1/PM_UCA3RXD/ PM_UCA3SOMI/	P4.1/PM_UCA3RXD/ PM_UCA3SOMI/S31	PM_UCA3RXD/ PM_UCA3SOMI	eUSCI_A3 UART RXD (direction controlled by eUSCI – input), eUSCI_A3 SPI slave out master in (direction controlled by eUSCI)	
P4.2/PM_UCA3TXD/ PM_UCA3SIMO	P4.2/PM_UCA3TXD/ PM_UCA3SIMO/S30	PM_UCA3TXD/ PM_UCA3SIMO	eUSCI_A3 UART TXD (direction controlled by eUSCI – output), eUSCI_A3 SPI slave in master out (direction controlled by eUSCI)	
P4.3/PM_UCA3CLK	P4.3/PM_UCA3CLK/S29	PM_UCA3CLK	eUSCI_A3 clock input/output (direction controlled by eUSCI)	
P4.4/PM_UCB1SOMI/ PM_UCB1SCL	P4.4/PM_UCB1SOMI/ PM_UCB1SCL/S28	PM_UCB1SOMI/ PM_UCB1SCL	eUSCI_B1 SPI slave out master in (direction controlled by eUSCI), eUSCI_B1 I2C clock (open drain and direction controlled by eUSCI)	
P4.5/PM_UCB1SIMO/ PM_UCB1SDA	P4.5/PM_UCB1SIMO/ PM_UCB1SDA/S27	PM_UCB1SIMO/ PM_UCB1SDA	eUSCI_B1 SPI slave in master out (direction controlled by eUSCI), eUSCI_B1 I2C data (open drain and direction controlled by eUSCI)	
P4.6/PM_UCB1CLK	P4.6/PM_UCB1CLK/S26	PM_UCB1CLK	eUSCI_B1 clock input/output (direction controlled by eUSCI)	
P4.7/PM_TA3.0	P4.7/PM_TA3.0/S25	PM_TA3.0	TA3 CCR0 capture input CCI0A	TA3 CCR0 compare output Out0

Copyright © 2014–2018, Texas Instruments Incorporated

6.11.7 System Module (SYS) (Link to User's Guide)

The SYS module handles many of the system functions within the device. These include power-on reset (POR) and power-up clear (PUC) handling, NMI source selection and management, reset interrupt vector generators, bootloader entry mechanisms, and configuration management (device descriptors). The SYS module also includes a data exchange mechanism using JTAG called a JTAG mailbox that can be used in the application. Table 6-13 lists the SYS module interrupt vector registers.

Table 6-13. System Module Interrupt Vector Registers

INTERRUPT VECTOR REGISTER	ADDRESS	INTERRUPT EVENT	VALUE	PRIORITY
SYSRSTIV, System Reset	019Eh	No interrupt pending	00h	
		Brownout (BOR)	02h	Highest
		RST/NMI (POR)	04h	
		DoBOR (BOR)	06h	
		Wake up from LPMx.5	08h	
		Security violation (BOR)	0Ah	
		SVSL (POR)	0Ch	
		SVSH (POR)	0Eh	
		SVML_OVP (POR)	10h	
		SVMH_OVP (POR)	12h	
		DoPOR (POR)	14h	
		WDT time-out (PUC)	16h	
		WDT key violation (PUC)	18h	
		KEYV flash key violation (PUC)	1Ah	
		Reserved	1Ch	
		Peripheral area fetch (PUC)	1Eh	
		PMM key violation (PUC)	20h	
		Reserved	22h to 3Eh	Lowest
SYSSNIV, System NMI	019Ch	No interrupt pending	00h	
		SVMLIFG	02h	Highest
		SVMHIFG	04h	
		DLYLIFG	06h	
		DLYHIFG	08h	
		VMAIFG	0Ah	
		JMBINIFG	0Ch	
		JMBOUTIFG	0Eh	
		VLRLIFG	10h	
		VLRHIFG	12h	
		Reserved	14h to 1Eh	Lowest
SYSUNIV, User NMI	019Ah	No interrupt pending	00h	
		NMIIFG	02h	Highest
		OFIFG	04h	
		ACCVIFG	06h	
		AUXSWGIFG	08h	
		Reserved	0Ah to 1Eh	Lowest

6.11.8 Watchdog Timer (WDT_A) (Link to User's Guide)

The primary function of the WDT_A is to perform a controlled system restart after a software problem occurs. If the selected time interval expires, a system reset is generated. If the watchdog function is not needed in an application, the timer can be configured as an interval timer and can generate interrupts at selected time intervals.

Copyright © 2014–2018, Texas Instruments Incorporated

6.11.9 DMA Controller (Link to User's Guide)

The DMA controller allows movement of data from one memory address to another without CPU intervention. For example, the DMA controller can be used to move data from the ADC10_A conversion memory to RAM. Using the DMA controller can increase the throughput of peripheral modules. The DMA controller reduces system power consumption by allowing the CPU to remain in sleep mode, without having to awaken to move data to or from a peripheral. Table 6-14 lists the available DMA triggers.

Table 6-14. DMA Trigger Assignments(1)

TRIGGER	CHANNEL		
	0	1	2
0	DMAREQ	DMAREQ	DMAREQ
1	TA0CCR0 CCIFG	TA0CCR0 CCIFG	TA0CCR0 CCIFG
2	TA0CCR2 CCIFG	TA0CCR2 CCIFG	TA0CCR2 CCIFG
3	TA1CCR0 CCIFG	TA1CCR0 CCIFG	TA1CCR0 CCIFG
4	Reserved	Reserved	Reserved
5	TA2CCR0 CCIFG	TA2CCR0 CCIFG	TA2CCR0 CCIFG
6	Reserved	Reserved	Reserved
7	TA3CCR0 CCIFG	TA3CCR0 CCIFG	TA3CCR0 CCIFG
8	Reserved	Reserved	Reserved
9	Reserved	Reserved	Reserved
10	Reserved	Reserved	Reserved
11	Reserved	Reserved	Reserved
12	Reserved	Reserved	Reserved
13	SD24IFG	SD24IFG	SD24IFG
14	Reserved	Reserved	Reserved
15	Reserved	Reserved	Reserved
16	UCA0RXIFG	UCA0RXIFG	UCA0RXIFG
17	UCA0TXIFG	UCA0TXIFG	UCA0TXIFG
18	UCA1RXIFG	UCA1RXIFG	UCA1RXIFG
19	UCA1TXIFG	UCA1TXIFG	UCA1TXIFG
20	UCA2RXIFG	UCA2RXIFG	UCA2RXIFG
21	UCA2TXIFG	UCA2TXIFG	UCA2TXIFG
22	UCB0RXIFG0	UCB0RXIFG0	UCB0RXIFG0
23	UCB0TXIFG0	UCB0TXIFG0	UCB0TXIFG0
24	ADC10IFG0	ADC10IFG0	ADC10IFG0
25	UCA3RXIFG	UCA3RXIFG	UCA3RXIFG
26	UCA3TXIFG	UCA3TXIFG	UCA3TXIFG
27	UCB1RXIFG0	UCB1RXIFG0	UCB1RXIFG0
28	UCB1TXIFG0	UCB1TXIFG0	UCB1TXIFG0
29	MPY ready	MPY ready	MPY ready
30	DMA2IFG	DMA0IFG	DMA1IFG
31	Reserved	Reserved	Reserved

(1) Reserved DMA triggers may be used by other devices in the family. Reserved DMA triggers do not cause any DMA trigger event when selected.

6.11.10 CRC16 (Link to User's Guide)

The CRC16 module produces a signature based on a sequence of entered data values and can be used for data checking purposes. The CRC16 module signature is based on the CRC-CCITT standard.

6.11.11 Hardware Multiplier (Link to User's Guide)

The multiplication operation is supported by a dedicated peripheral module. The module performs operations with 32-, 24-, 16-, and 8-bit operands. The module supports signed and unsigned multiplication as well as signed and unsigned multiply-and-accumulate operations.

6.11.12 Enhanced Universal Serial Communication Interface (eUSCI) (Links to User's Guide: UART Mode, SPI Mode, I^2C Mode)

The eUSCI module is used for serial data communication. The eUSCI module supports synchronous communication protocols such as SPI (3- or 4-pin) and I^2C, and asynchronous communication protocols such as UART, enhanced UART with automatic baud-rate detection, and IrDA.

The eUSCI_An module provides support for SPI (3- or 4-pin), UART, enhanced UART, and IrDA.

The eUSCI_Bn module provides support for SPI (3- or 4-pin) and I^2C.

Four eUSCI_A and two eUSCI_B module are implemented in the MSP430F67xx1A MCUs.

6.11.13 ADC10_A (Link to User's Guide)

The ADC10_A module supports fast, 10-bit analog-to-digital conversions. The module implements a 10-bit SAR core, sample select control, reference generator and a conversion results buffer. A window comparator with a lower and upper limit allows CPU independent result monitoring with three window comparator interrupt flags.

6.11.14 SD24_B (Link to User's Guide)

The SD24_B module integrates up to seven independent 24-bit sigma-delta ADCs. Each converter is designed with a fully differential analog input pair and programmable gain amplifier input stage. Also the converters are based on second-order oversampling sigma-delta modulators and digital decimation filters. The decimation filters are comb filters with selectable oversampling ratios of up to 1024.

Copyright © 2014–2018, Texas Instruments Incorporated

6.11.15 TA0 (Link to User's Guide)

TA0 is a 16-bit timer/counter (Timer_A type) with three capture/compare registers. TA0 can support multiple capture/compares, PWM outputs, and interval timing (see Table 6-15). TA0 also has extensive interrupt capabilities. Interrupts may be generated from the counter on overflow conditions and from each of the capture/compare registers.

Table 6-15. TA0 Signal Connections

DEVICE INPUT SIGNAL	MODULE INPUT NAME	MODULE BLOCK	MODULE OUTPUT SIGNAL	DEVICE OUTPUT SIGNAL
PM_TACLK	TACLK	Timer	NA	NA
ACLK (internal)	ACLK			
SMCLK (internal)	SMCLK			
PM_TACLK	INCLK			
PM_TA0.0	CCI0A	CCR0	TA0	PM_TA0.0
CBOUT (internal)	CCI0B			
DVSS	GND			
DVCC	VCC			
PM_TA0.1	CCI1A	CCR1	TA1	PM_TA0.1
ACLK (internal)	CCI1B			ADC10_A (internal) ADC10SHSx = 001b
DVSS	GND			SD24_B (internal) SD24CHx.SD24SCSx = 001b
DVCC	VCC			
PM_TA0.2	CCI2A	CCR2	TA2	PM_TA0.2
DVSS	CCI2B			
DVSS	GND			
DVCC	VCC			

6.11.16 TA1 (Link to User's Guide)

TA1 is a 16-bit timer/counter (Timer_A type) with two capture/compare registers (see Table 6-16). TA1 can support multiple capture/compares, PWM outputs, and interval timing. TA1 also has extensive interrupt capabilities. Interrupts may be generated from the counter on overflow conditions and from each of the capture/compare registers.

Table 6-16. TA1 Signal Connections

DEVICE INPUT SIGNAL	MODULE INPUT NAME	MODULE BLOCK	MODULE OUTPUT SIGNAL	DEVICE OUTPUT SIGNAL
PM_TACLK	TACLK	Timer	NA	NA
ACLK (internal)	ACLK			
SMCLK (internal)	SMCLK			
PM_TACLK	INCLK			
PM_TA1.0	CCI0A	CCR0	TA0	PM_TA1.0
CBOUT (internal)	CCI0B			
DVSS	GND			
DVCC	VCC			
PM_TA1.1	CCI1A	CCR1	TA1	PM_TA1.1
ACLK (internal)	CCI1B			
DVSS	GND			
DVCC	VCC			

6.11.17 TA2 (Link to User's Guide)

TA2 is a 16-bit timer/counter (Timer_A type) with two capture/compare registers. TA2 can support multiple capture/compares, PWM outputs, and interval timing (see Table 6-17). TA2 also has extensive interrupt capabilities. Interrupts may be generated from the counter on overflow conditions and from each of the capture/compare registers.

Table 6-17. TA2 Signal Connections

DEVICE INPUT SIGNAL	MODULE INPUT NAME	MODULE BLOCK	MODULE OUTPUT SIGNAL	DEVICE OUTPUT SIGNAL
PM_TACLK	TACLK	Timer	NA	NA
ACLK (internal)	ACLK			
SMCLK (internal)	SMCLK			
PM_TACLK	INCLK			
PM_TA2.0	CCI0A	CCR0	TA0	PM_TA2.0
CBOUT (internal)	CCI0B			
DVSS	GND			
DVCC	VCC			
PM_TA2.1	CCI1A	CCR1	TA1	PM_TA2.1
ACLK (internal)	CCI1B			SD24_B (internal) SD24CHx.SD24SCSx = 010b
DVSS	GND			
DVCC	VCC			

6.11.18 TA3 (Link to User's Guide)

TA3 is a 16-bit timer/counter (Timer_A type) with two capture/compare registers. TA3 can support multiple capture/compares, PWM outputs, and interval timing (see Table 6-18). TA3 also has extensive interrupt capabilities. Interrupts may be generated from the counter on overflow conditions and from each of the capture/compare registers.

Table 6-18. TA3 Signal Connections

DEVICE INPUT SIGNAL	MODULE INPUT NAME	MODULE BLOCK	MODULE OUTPUT SIGNAL	DEVICE OUTPUT SIGNAL
PM_TACLK	TACLK	Timer	NA	
ACLK (internal)	ACLK			
SMCLK (internal)	SMCLK			
PM_TACLK	INCLK			
PM_TA3.0	CCI0A	CCR0	TA0	PM_TA3.0
CBOUT (internal)	CCI0B			ADC10_A (internal) ADC10SHSx = 010b
DVSS	GND			
DVCC	VCC			
PM_TA3.1	CCI1A	CCR1	TA1	PM_TA3.1
ACLK (internal)	CCI1B			SD24_B (internal) SD24CHx.SD24SCSx = 011b
DVSS	GND			
DVCC	VCC			

Copyright © 2014–2018, Texas Instruments Incorporated

6.11.19 SD24_B Triggers

Table 6-19 lists the input trigger connections to SD24_B converters from Timer_A modules and output trigger pulse connection from SD24_B to ADC10_A.

Table 6-19. SD24_B Input/Output Trigger Connections

DEVICE INPUT SIGNAL	MODULE INPUT SIGNAL	MODULE BLOCK	MODULE OUTPUT SIGNAL	DEVICE OUTPUT SIGNAL
TA0.1 (internal)	SD24_B SD24CHx.SD24SCSx = 001b	SD24_B	Trigger Pulse	ADC10_A (internal) ADC10SHSx = 011b
TA2.1 (internal)	SD24_B SD24CHx.SD24SCSx = 010b			
TA3.1 (internal)	SD24_B SD24CHx.SD24SCSx = 011b			

6.11.20 ADC10_A Triggers

Table 6-20 lists the input trigger connections to ADC10_A from Timer_A modules and SD24_B.

Table 6-20. ADC10_A Input Trigger Connections

DEVICE INPUT SIGNAL	MODULE INPUT SIGNAL	MODULE BLOCK
TA0.1 (internal)	ADC10_A ADC10SHSx = 001b	ADC10_A
TA3.0 (internal)	ADC10_A ADC10SHSx = 010b	
SD24_B trigger pulse (internal)	ADC10_A ADC10SHSx = 011b	

6.11.21 Real-Time Clock (RTC_C) (Link to User's Guide)

The RTC_C module can be configured for calendar mode providing seconds, hours, day of week, day of month, month, and year. The RTC_C control and configuration registers are password protected to ensure clock integrity against runaway code. Calendar mode integrates an internal calendar that compensates for months with less than 31 days and includes leap year correction. The RTC_C also supports flexible alarm functions, offset calibration, temperature compensation, and time capture on two external events. The RTC_C on this device operates on dedicated AUXVCC3 supply and supports operation in LPM3.5.

6.11.22 Reference (REF) Module Voltage Reference (Link to User's Guide)

The REF module generates all of the critical reference voltages that can be used by the various analog peripherals in the device. The analog peripherals include the ADC10_A, LCD_C, and SD24_B modules.

6.11.23 LCD_C (Link to User's Guide)

The LCD_C driver generates the segment and common signals required to drive a liquid crystal display (LCD). The LCD_C controller has dedicated data memories to hold segment drive information. Common and segment signals are generated as defined by the mode. Static, 2-mux, 3-mux, 4-mux, up to 8-mux LCDs are supported. The module can provide a LCD voltage independent of the supply voltage with its integrated charge pump. It is possible to control the level of the LCD voltage, and thus contrast, by software. The module also provides an automatic blinking capability for individual segments in static, 2-mux, 3-mux, and 4-mux modes.

6.11.24 Comparator_B (Link to User's Guide)

The primary function of the Comparator_B module is to support precision slope analog-to-digital conversions, battery voltage supervision, and monitoring of external analog signals.

6.11.25 Embedded Emulation Module (EEM) (Link to User's Guide)

The EEM supports real-time in-system debugging. The L version of the EEM has the following features:

- Eight hardware triggers or breakpoints on memory access
- Two hardware triggers or breakpoints on CPU register write access
- Up to 10 hardware triggers that can be combined to form complex triggers or breakpoints
- Two cycle counters
- Sequencer
- State storage
- Clock control on module level

6.11.26 Peripheral File Map

Table 6-21 shows the base address for the registers of each supported peripheral. Table 6-22 through Table 6-63 show the offset addresses for each register. For complete description of these registers, see the *MSP430x5xx and MSP430x6xx Family User's Guide*.

Table 6-21. Peripherals

MODULE NAME	BASE ADDRESS	OFFSET ADDRESS RANGE
Special Functions (see Table 6-22)	0100h	000h to 01Fh
PMM (see Table 6-23)	0120h	000h to 01Fh
Flash Control (see Table 6-24)	0140h	000h to 00Fh
CRC16 (see Table 6-25)	0150h	000h to 007h
RAM Control (see Table 6-26)	0158h	000h to 001h
Watchdog (see Table 6-27)	015Ch	000h to 001h
UCS (see Table 6-28)	0160h	000h to 01Fh
SYS (see Table 6-29)	0180h	000h to 01Fh
Shared Reference (see Table 6-30)	01B0h	000h to 001h
Port Mapping Control (see Table 6-31)	01C0h	000h to 007h
Port Mapping Port P2 (see Table 6-32)	01D0h	000h to 007h
Port Mapping Port P3 (see Table 6-33)	01D8h	000h to 007h
Port Mapping Port P4 (see Table 6-34)	01E0h	000h to 007h
Port P1, P2 (see Table 6-35)	0200h	000h to 01Fh
Port P3, P4 (see Table 6-36)	0220h	000h to 00Bh
Port P5, P6 (see Table 6-37)	0240h	000h to 00Bh
Port P7, P8 (see Table 6-38)	0260h	000h to 00Bh
Port P9, P10 (see Table 6-39) (Ports P9 and P10 not available in PZ package)	0280h	000h to 00Bh
Port P11 (see Table 6-40) (Port P11 not available in PZ package)	02A0h	000h to 00Bh
Port PJ (see Table 6-41)	0320h	000h to 01Fh
Timer TA0 (see Table 6-42)	0340h	000h to 03Fh
Timer TA1 (see Table 6-43)	0380h	000h to 03Fh
Timer TA2 (see Table 6-44)	0400h	000h to 03Fh
Timer TA3 (see Table 6-45)	0440h	000h to 03Fh
Backup Memory (see Table 6-46)	0480h	000h to 00Fh
32-Bit Hardware Multiplier (see Table 6-48)	04C0h	000h to 02Fh
DMA General Control (see Table 6-49)	0500h	000h to 00Fh
DMA Channel 0 (see Table 6-50)	0500h	010h to 01Fh
DMA Channel 1 (see Table 6-51)	0500h	020h to 02Fh

Copyright © 2014–2018, Texas Instruments Incorporated

Table 6-21. Peripherals (continued)

MODULE NAME	BASE ADDRESS	OFFSET ADDRESS RANGE
DMA Channel 2 (see Table 6-52)	0500h	030h to 03Fh
RTC_C (see Table 6-47)	0C80h	000h to 03Fh
eUSCI_A0 (see Table 6-53)	05C0h	000h to 01Fh
eUSCI_A1 (see Table 6-54)	05E0h	000h to 01Fh
eUSCI_A2 (see Table 6-55)	0600h	000h to 01Fh
eUSCI_A3 (see Table 6-56)	0620h	000h to 01Fh
eUSCI_B0 (see Table 6-57)	0640h	000h to 02Fh
eUSCI_B1 (see Table 6-58)	0680h	000h to 02Fh
ADC10_A (see Table 6-59)	0740h	000h to 01Fh
SD24_B (see Table 6-60)	0800h	000h to 06Fh
Comparator_B (see Table 6-61)	08C0h	000h to 00Fh
Auxiliary Supply (see Table 6-62)	09E0h	000h to 01Fh
LCD_C (see Table 6-63)	0A00h	000h to 05Fh

Table 6-22. Special Function Registers (Base Address: 0100h)

REGISTER DESCRIPTION	REGISTER	OFFSET
SFR interrupt enable	SFRIE1	00h
SFR interrupt flag	SFRIFG1	02h
SFR reset pin control	SFRRPCR	04h

Table 6-23. PMM Registers (Base Address: 0120h)

REGISTER DESCRIPTION	REGISTER	OFFSET
PMM control 0	PMMCTL0	00h
PMM control 1	PMMCTL1	02h
SVS high-side control	SVSMHCTL	04h
SVS low-side control	SVSMLCTL	06h
PMM interrupt flags	PMMIFG	0Ch
PMM interrupt enable	PMMIE	0Eh
PMM power mode 5 control 0	PM5CTL0	10h

Table 6-24. Flash Control Registers (Base Address: 0140h)

REGISTER DESCRIPTION	REGISTER	OFFSET
Flash control 1	FCTL1	00h
Flash control 3	FCTL3	04h
Flash control 4	FCTL4	06h

Table 6-25. CRC16 Registers (Base Address: 0150h)

REGISTER DESCRIPTION	REGISTER	OFFSET
CRC data input	CRC16DI	00h
CRC result	CRCINIRES	04h

Table 6-26. RAM Control Registers (Base Address: 0158h)

REGISTER DESCRIPTION	REGISTER	OFFSET
RAM control 0	RCCTL0	00h

Table 6-27. Watchdog Registers (Base Address: 015Ch)

REGISTER DESCRIPTION	REGISTER	OFFSET
Watchdog timer control	WDTCTL	00h

Table 6-28. UCS Registers (Base Address: 0160h)

REGISTER DESCRIPTION	REGISTER	OFFSET
UCS control 0	UCSCTL0	00h
UCS control 1	UCSCTL1	02h
UCS control 2	UCSCTL2	04h
UCS control 3	UCSCTL3	06h
UCS control 4	UCSCTL4	08h
UCS control 5	UCSCTL5	0Ah
UCS control 6	UCSCTL6	0Ch
UCS control 7	UCSCTL7	0Eh
UCS control 8	UCSCTL8	10h

Copyright © 2014–2018, Texas Instruments Incorporated

Table 6-29. SYS Registers (Base Address: 0180h)

REGISTER DESCRIPTION	REGISTER	OFFSET
System control	SYSCTL	00h
Bootloader configuration area	SYSBSLC	02h
JTAG mailbox control	SYSJMBC	06h
JTAG mailbox input 0	SYSJMBI0	08h
JTAG mailbox input 1	SYSJMBI1	0Ah
JTAG mailbox output 0	SYSJMBO0	0Ch
JTAG mailbox output 1	SYSJMBO1	0Eh
Bus Error vector generator	SYSBERRIV	18h
User NMI vector generator	SYSUNIV	1Ah
System NMI vector generator	SYSSNIV	1Ch
Reset vector generator	SYSRSTIV	1Eh

Table 6-30. Shared Reference Registers (Base Address: 01B0h)

REGISTER DESCRIPTION	REGISTER	OFFSET
Shared reference control	REFCTL	00h

Table 6-31. Port Mapping Controller (Base Address: 01C0h)

REGISTER DESCRIPTION	REGISTER	OFFSET
Port mapping password	PMAPPWD	00h
Port mapping control	PMAPCTL	02h

Table 6-32. Port Mapping for Port P2 (Base Address: 01D0h)

REGISTER DESCRIPTION	REGISTER	OFFSET
Port P2.0 mapping	P2MAP0	00h
Port P2.1 mapping	P2MAP1	01h
Port P2.2 mapping	P2MAP2	02h
Port P2.3 mapping	P2MAP3	03h
Port P2.4 mapping	P2MAP4	04h
Port P2.5 mapping	P2MAP5	05h
Port P2.6 mapping	P2MAP6	06h
Port P2.7 mapping	P2MAP7	07h

Table 6-33. Port Mapping for Port P3 (Base Address: 01D8h)

REGISTER DESCRIPTION	REGISTER	OFFSET
Port P3.0 mapping	P3MAP0	00h
Port P3.1 mapping	P3MAP1	01h
Port P3.2 mapping	P3MAP2	02h
Port P3.3 mapping	P3MAP3	03h
Port P3.4 mapping	P3MAP4	04h
Port P3.5 mapping	P3MAP5	05h
Port P3.6 mapping	P3MAP6	06h
Port P3.7 mapping	P3MAP7	07h

Copyright © 2014–2018, Texas Instruments Incorporated

Table 6-34. Port Mapping for Port P4 (Base Address: 01E0h)

REGISTER DESCRIPTION	REGISTER	OFFSET
Port P4.0 mapping	P4MAP0	00h
Port P4.1 mapping	P4MAP1	01h
Port P4.2 mapping	P4MAP2	02h
Port P4.3 mapping	P4MAP3	03h
Port P4.4 mapping	P4MAP4	04h
Port P4.5 mapping	P4MAP5	05h
Port P4.6 mapping	P4MAP6	06h
Port P4.7 mapping	P4MAP7	07h

Table 6-35. Port P1, P2 Registers (Base Address: 0200h)

REGISTER DESCRIPTION	REGISTER	OFFSET
Port P1 input	P1IN	00h
Port P1 output	P1OUT	02h
Port P1 direction	P1DIR	04h
Port P1 resistor enable	P1REN	06h
Port P1 drive strength	P1DS	08h
Port P1 selection 0	P1SEL0	0Ah
Port P1 selection 1	P1SEL1	0Ch
Port P1 interrupt vector word	P1IV	0Eh
Port P1 interrupt edge select	P1IES	18h
Port P1 interrupt enable	P1IE	1Ah
Port P1 interrupt flag	P1IFG	1Ch
Port P2 input	P2IN	01h
Port P2 output	P2OUT	03h
Port P2 direction	P2DIR	05h
Port P2 resistor enable	P2REN	07h
Port P2 drive strength	P2DS	09h
Port P2 selection 0	P2SEL0	0Bh
Port P2 selection 1 (1)	P2SEL1	0Dh
Port P2 interrupt vector word	P2IV	1Eh
Port P2 interrupt edge select	P2IES	19h
Port P2 interrupt enable	P2IE	1Bh
Port P2 interrupt flag	P2IFG	1Dh

(1) P2SEL1 is an empty control register to be consistent with P1SEL1 in 16-bit access.

Copyright © 2014–2018, Texas Instruments Incorporated

Table 6-36. Port P3, P4 Registers (Base Address: 0220h)

REGISTER DESCRIPTION	REGISTER	OFFSET
Port P3 input	P3IN	00h
Port P3 output	P3OUT	02h
Port P3 direction	P3DIR	04h
Port P3 resistor enable	P3REN	06h
Port P3 drive strength	P3DS	08h
Port P3 selection 0	P3SEL0	0Ah
Port P4 input	P4IN	01h
Port P4 output	P4OUT	03h
Port P4 direction	P4DIR	05h
Port P4 resistor enable	P4REN	07h
Port P4 drive strength	P4DS	09h
Port P4 selection 0	P4SEL0	0Bh

Table 6-37. Port P5, P6 Registers (Base Address: 0240h)

REGISTER DESCRIPTION	REGISTER	OFFSET
Port P5 input	P5IN	00h
Port P5 output	P5OUT	02h
Port P5 direction	P5DIR	04h
Port P5 resistor enable	P5REN	06h
Port P5 drive strength	P5DS	08h
Port P5 selection 0	P5SEL0	0Ah
Port P5 selection 1	P5SEL1	0Ch
Port P6 input	P6IN	01h
Port P6 output	P6OUT	03h
Port P6 direction	P6DIR	05h
Port P6 resistor enable	P6REN	07h
Port P6 drive strength	P6DS	09h
Port P6 selection 0	P6SEL0	0Bh
Port P6 selection 1 (1)	P6SEL1	0Dh

(1) P6SEL1 is an empty control register to be consistent with P5SEL1 in 16-bit access.

Table 6-38. Port P7, P8 Registers (Base Address: 0260h)

REGISTER DESCRIPTION	REGISTER	OFFSET
Port P7 input	P7IN	00h
Port P7 output	P7OUT	02h
Port P7 direction	P7DIR	04h
Port P7 resistor enable	P7REN	06h
Port P7 drive strength	P7DS	08h
Port P7 selection 0	P7SEL0	0Ah
Port P8 input	P8IN	01h
Port P8 output	P8OUT	03h
Port P8 direction	P8DIR	05h
Port P8 resistor enable	P8REN	07h
Port P8 drive strength	P8DS	09h
Port P8 selection 0	P8SEL0	0Bh

Copyright © 2014–2018, Texas Instruments Incorporated

Table 6-39. Port P9, P10 Registers (Base Address: 0280h)

REGISTER DESCRIPTION	REGISTER	OFFSET
Port P9 input	P9IN	00h
Port P9 output	P9OUT	02h
Port P9 direction	P9DIR	04h
Port P9 resistor enable	P9REN	06h
Port P9 drive strength	P9DS	08h
Port P9 selection 0	P9SEL0	0Ah
Port P10 input	P10IN	01h
Port P10 output	P10OUT	03h
Port P10 direction	P10DIR	05h
Port P10 resistor enable	P10REN	07h
Port P10 drive strength	P10DS	09h
Port P10 selection 0	P10SEL0	0Bh

Table 6-40. Port 11 Registers (Base Address: 02A0h)

REGISTER DESCRIPTION	REGISTER	OFFSET
Port P11 input	P11IN	00h
Port P11 output	P11OUT	02h
Port P11 direction	P11DIR	04h
Port P11 resistor enable	P11REN	06h
Port P11 drive strength	P11DS	08h
Port P11 selection 0	P11SEL0	0Ah

Table 6-41. Port J Registers (Base Address: 0320h)

REGISTER DESCRIPTION	REGISTER	OFFSET
Port PJ input	PJIN	00h
Port PJ output	PJOUT	02h
Port PJ direction	PJDIR	04h
Port PJ resistor enable	PJREN	06h
Port PJ drive strength	PJDS	08h
Port PJ selection	PJSEL	0Ah

Table 6-42. TA0 Registers (Base Address: 0340h)

REGISTER DESCRIPTION	REGISTER	OFFSET
TA0 control	TA0CTL	00h
Capture/compare control 0	TA0CCTL0	02h
Capture/compare control 1	TA0CCTL1	04h
Capture/compare control 2	TA0CCTL2	06h
TA0 counter	TA0R	10h
Capture/compare 0	TA0CCR0	12h
Capture/compare 1	TA0CCR1	14h
Capture/compare 2	TA0CCR2	16h
TA0 expansion 0	TA0EX0	20h
TA0 interrupt vector	TA0IV	2Eh

Copyright © 2014–2018, Texas Instruments Incorporated

Table 6-43. TA1 Registers (Base Address: 0380h)

REGISTER DESCRIPTION	REGISTER	OFFSET
TA1 control	TA1CTL	00h
Capture/compare control 0	TA1CCTL0	02h
Capture/compare control 1	TA1CCTL1	04h
TA1 counter	TA1R	10h
Capture/compare 0	TA1CCR0	12h
Capture/compare 1	TA1CCR1	14h
TA1 expansion 0	TA1EX0	20h
TA1 interrupt vector	TA1IV	2Eh

Table 6-44. TA2 Registers (Base Address: 0400h)

REGISTER DESCRIPTION	REGISTER	OFFSET
TA2 control	TA2CTL	00h
Capture/compare control 0	TA2CCTL0	02h
Capture/compare control 1	TA2CCTL1	04h
TA2 counter	TA2R	10h
Capture/compare 0	TA2CCR0	12h
Capture/compare 1	TA2CCR1	14h
TA2 expansion 0	TA2EX0	20h
TA2 interrupt vector	TA2IV	2Eh

Table 6-45. TA3 Registers (Base Address: 0440h)

REGISTER DESCRIPTION	REGISTER	OFFSET
TA3 control	TA3CTL	00h
Capture/compare control 0	TA3CCTL0	02h
Capture/compare control 1	TA3CCTL1	04h
TA3 counter	TA3R	10h
Capture/compare 0	TA3CCR0	12h
Capture/compare 1	TA3CCR1	14h
TA3 expansion 0	TA3EX0	20h
TA3 interrupt vector	TA3IV	2Eh

Table 6-46. Backup Memory Registers (Base Address: 0480h)

REGISTER DESCRIPTION	REGISTER	OFFSET
Backup memory 0	BAKMEM0	00h
Backup memory 1	BAKMEM1	02h
Backup memory 2	BAKMEM2	04h
Backup memory 3	BAKMEM3	06h

Copyright © 2014–2018, Texas Instruments Incorporated

Table 6-47. RTC_C Registers (Base Address: 0C80h)

REGISTER DESCRIPTION	REGISTER	OFFSET
RTC control 0	RTCCTL0	00h
RTC password	RTCPWD	01h
RTC control 1	RTCCTL1	02h
RTC control 3	RTCCTL3	03h
RTC offset calibration	RTCOCAL	04h
RTC temperature compensation	RTCTCMP	06h
RTC prescaler 0 control	RTCPS0CTL	08h
RTC prescaler 1 control	RTCPS1CTL	0Ah
RTC prescaler 0	RTCPS0	0Ch
RTC prescaler 1	RTCPS1	0Dh
RTC interrupt vector word	RTCIV	0Eh
RTC seconds	RTCSEC	10h
RTC minutes	RTCMIN	11h
RTC hours	RTCHOUR	12h
RTC day of week	RTCDOW	13h
RTC days	RTCDAY	14h
RTC month	RTCMON	15h
RTC year	RTCYEAR	16h
RTC alarm minutes	RTCAMIN	18h
RTC alarm hours	RTCAHOUR	19h
RTC alarm day of week	RTCADOW	1Ah
RTC alarm days	RTCADAY	1Bh
Binary-to-BCD conversion	BIN2BCD	1Ch
BCD-to-binary conversion	BCD2BIN	1Eh
Real-time clock time capture control	RTCTCCTL	20h
Tamper detect pin 0 control	RTCCAP0CTL	21h
Tamper detect pin 1 control	RTCCAP1CTL	22h
RTC seconds backup 0	RTCSECBAK0	30h
RTC minutes backup 0	RTCMINBAK0	31h
RTC hours backup 0	RTCHOURBAK0	32h
RTC days backup 0	RTCDAYBAK0	33h
RTC month backup 0	RTCMONBAK0	34h
RTC year backup 0	RTCYEARBAK0	36h
RTC seconds backup 1	RTCSECBAK1	38h
RTC minutes backup 1	RTCMINBAK1	39h
RTC hours backup 1	RTCHOURBAK1	3Ah
RTC days backup 1	RTCDAYBAK1	3Bh
RTC month backup 1	RTCMONBAK1	3Ch
RTC year backup 1	RTCYEARBAK1	3Eh

Copyright © 2014–2018, Texas Instruments Incorporated

Table 6-48. 32-Bit Hardware Multiplier Registers (Base Address: 04C0h)

REGISTER DESCRIPTION	REGISTER	OFFSET
16-bit operand 1 – multiply	MPY	00h
16-bit operand 1 – signed multiply	MPYS	02h
16-bit operand 1 – multiply accumulate	MAC	04h
16-bit operand 1 – signed multiply accumulate	MACS	06h
16-bit operand 2	OP2	08h
16 × 16 result low word	RESLO	0Ah
16 × 16 result high word	RESHI	0Ch
16 × 16 sum extension	SUMEXT	0Eh
32-bit operand 1 – multiply low word	MPY32L	10h
32-bit operand 1 – multiply high word	MPY32H	12h
32-bit operand 1 – signed multiply low word	MPYS32L	14h
32-bit operand 1 – signed multiply high word	MPYS32H	16h
32-bit operand 1 – multiply accumulate low word	MAC32L	18h
32-bit operand 1 – multiply accumulate high word	MAC32H	1Ah
32-bit operand 1 – signed multiply accumulate low word	MACS32L	1Ch
32-bit operand 1 – signed multiply accumulate high word	MACS32H	1Eh
32-bit operand 2 – low word	OP2L	20h
32-bit operand 2 – high word	OP2H	22h
32 × 32 result 0 – least significant word	RES0	24h
32 × 32 result 1	RES1	26h
32 × 32 result 2	RES2	28h
32 × 32 result 3 – most significant word	RES3	2Ah
MPY32 control 0	MPY32CTL0	2Ch

Table 6-49. DMA General Control Registers (Base Address: 0500h)

REGISTER DESCRIPTION	REGISTER	OFFSET
DMA module control 0	DMACTL0	00h
DMA module control 1	DMACTL1	02h
DMA module control 2	DMACTL2	04h
DMA module control 3	DMACTL3	06h
DMA module control 4	DMACTL4	08h
DMA interrupt vector	DMAIV	0Eh

Table 6-50. DMA Channel 0 Registers (Base Address: 0500h)

REGISTER DESCRIPTION	REGISTER	OFFSET
DMA channel 0 control	DMA0CTL	10h
DMA channel 0 source address low	DMA0SAL	12h
DMA channel 0 source address high	DMA0SAH	14h
DMA channel 0 destination address low	DMA0DAL	16h
DMA channel 0 destination address high	DMA0DAH	18h
DMA channel 0 transfer size	DMA0SZ	1Ah

Table 6-51. DMA Channel 1 Registers (Base Address: 0500h)

REGISTER DESCRIPTION	REGISTER	OFFSET
DMA channel 1 control	DMA1CTL	20h
DMA channel 1 source address low	DMA1SAL	22h
DMA channel 1 source address high	DMA1SAH	24h
DMA channel 1 destination address low	DMA1DAL	26h
DMA channel 1 destination address high	DMA1DAH	28h
DMA channel 1 transfer size	DMA1SZ	2Ah

Table 6-52. DMA Channel 2 Registers (Base Address: 0500h)

REGISTER DESCRIPTION	REGISTER	OFFSET
DMA channel 2 control	DMA2CTL	30h
DMA channel 2 source address low	DMA2SAL	32h
DMA channel 2 source address high	DMA2SAH	34h
DMA channel 2 destination address low	DMA2DAL	36h
DMA channel 2 destination address high	DMA2DAH	38h
DMA channel 2 transfer size	DMA2SZ	3Ah

Table 6-53. eUSCI_A0 Registers (Base Address: 05C0h)

REGISTER DESCRIPTION	REGISTER	OFFSET
USCI_A control word 0	UCA0CTLW0	00h
USCI _A control word 1	UCA0CTLW1	02h
USCI_A baud rate 0	UCA0BR0	06h
USCI_A baud rate 1	UCA0BR1	07h
USCI_A modulation control	UCA0MCTLW	08h
USCI_A status	UCA0STAT	0Ah
USCI_A receive buffer	UCA0RXBUF	0Ch
USCI_A transmit buffer	UCA0TXBUF	0Eh
USCI_A LIN control	UCA0ABCTL	10h
USCI_A IrDA transmit control	UCA0IRTCTL	12h
USCI_A IrDA receive control	UCA0IRRCTL	13h
USCI_A interrupt enable	UCA0IE	1Ah
USCI_A interrupt flags	UCA0IFG	1Ch
USCI_A interrupt vector word	UCA0IV	1Eh

Copyright © 2014–2018, Texas Instruments Incorporated

Table 6-54. eUSCI_A1 Registers (Base Address:05E0h)

REGISTER DESCRIPTION	REGISTER	OFFSET
USCI_A control word 0	UCA1CTLW0	00h
USCI _A control word 1	UCA1CTLW1	02h
USCI_A baud rate 0	UCA1BR0	06h
USCI_A baud rate 1	UCA1BR1	07h
USCI_A modulation control	UCA1MCTLW	08h
USCI_A status	UCA1STAT	0Ah
USCI_A receive buffer	UCA1RXBUF	0Ch
USCI_A transmit buffer	UCA1TXBUF	0Eh
USCI_A LIN control	UCA1ABCTL	10h
USCI_A IrDA transmit control	UCA1IRTCTL	12h
USCI_A IrDA receive control	UCA1IRRCTL	13h
USCI_A interrupt enable	UCA1IE	1Ah
USCI_A interrupt flags	UCA1IFG	1Ch
USCI_A interrupt vector word	UCA1IV	1Eh

Table 6-55. eUSCI_A2 Registers (Base Address:0600h)

REGISTER DESCRIPTION	REGISTER	OFFSET
USCI_A control word 0	UCA2CTLW0	00h
USCI _A control word 1	UCA2CTLW1	02h
USCI_A baud rate 0	UCA2BR0	06h
USCI_A baud rate 1	UCA2BR1	07h
USCI_A modulation control	UCA2MCTLW	08h
USCI_A status	UCA2STAT	0Ah
USCI_A receive buffer	UCA2RXBUF	0Ch
USCI_A transmit buffer	UCA2TXBUF	0Eh
USCI_A LIN control	UCA2ABCTL	10h
USCI_A IrDA transmit control	UCA2IRTCTL	12h
USCI_A IrDA receive control	UCA2IRRCTL	13h
USCI_A interrupt enable	UCA2IE	1Ah
USCI_A interrupt flags	UCA2IFG	1Ch
USCI_A interrupt vector word	UCA2IV	1Eh

Table 6-56. eUSCI_A3 Registers (Base Address: 0620h)

REGISTER DESCRIPTION	REGISTER	OFFSET
USCI_A control word 0	UCA3CTLW0	00h
USCI _A control word 1	UCA3CTLW1	02h
USCI_A baud rate 0	UCA3BR0	06h
USCI_A baud rate 1	UCA3BR1	07h
USCI_A modulation control	UCA3MCTLW	08h
USCI_A status	UCA3STAT	0Ah
USCI_A receive buffer	UCA3RXBUF	0Ch
USCI_A transmit buffer	UCA3TXBUF	0Eh
USCI_A LIN control	UCA3ABCTL	10h
USCI_A IrDA transmit control	UCA3IRTCTL	12h
USCI_A IrDA receive control	UCA3IRRCTL	13h
USCI_A interrupt enable	UCA3IE	1Ah
USCI_A interrupt flags	UCA3IFG	1Ch
USCI_A interrupt vector word	UCA3IV	1Eh

Table 6-57. eUSCI_B0 Registers (Base Address: 0640h)

REGISTER DESCRIPTION	REGISTER	OFFSET
USCI_B control word 0	UCB0CTLW0	00h
USCI_B control word 1	UCB0CTLW1	02h
USCI_B bit rate 0	UCB0BR0	06h
USCI_B bit rate 1	UCB0BR1	07h
USCI_B status word	UCB0STATW	08h
USCI_B byte counter threshold	UCB0TBCNT	0Ah
USCI_B receive buffer	UCB0RXBUF	0Ch
USCI_B transmit buffer	UCB0TXBUF	0Eh
USCI_B I2C own address 0	UCB0I2COA0	14h
USCI_B I2C own address 1	UCB0I2COA1	16h
USCI_B I2C own address 2	UCB0I2COA2	18h
USCI_B I2C own address 3	UCB0I2COA3	1Ah
USCI_B received address	UCB0ADDRX	1Ch
USCI_B address mask	UCB0ADDMASK	1Eh
USCI I2C slave address	UCB0I2CSA	20h
USCI interrupt enable	UCB0IE	2Ah
USCI interrupt flags	UCB0IFG	2Ch
USCI interrupt vector word	UCB0IV	2Eh

Copyright © 2014–2018, Texas Instruments Incorporated

Table 6-58. eUSCI_B1 Registers (Base Address: 0680h)

REGISTER DESCRIPTION	REGISTER	OFFSET
USCI_B control word 0	UCB1CTLW0	00h
USCI_B control word 1	UCB1CTLW1	02h
USCI_B bit rate 0	UCB1BR0	06h
USCI_B bit rate 1	UCB1BR1	07h
USCI_B status word	UCB1STATW	08h
USCI_B byte counter threshold	UCB1TBCNT	0Ah
USCI_B receive buffer	UCB1RXBUF	0Ch
USCI_B transmit buffer	UCB1TXBUF	0Eh
USCI_B I2C own address 0	UCB1I2COA0	14h
USCI_B I2C own address 1	UCB1I2COA1	16h
USCI_B I2C own address 2	UCB1I2COA2	18h
USCI_B I2C own address 3	UCB1I2COA3	1Ah
USCI_B received address	UCB1ADDRX	1Ch
USCI_B address mask	UCB1ADDMASK	1Eh
USCI I2C slave address	UCB1I2CSA	20h
USCI interrupt enable	UCB1IE	2Ah
USCI interrupt flags	UCB1IFG	2Ch
USCI interrupt vector word	UCB1IV	2Eh

Table 6-59. ADC10_A Registers (Base Address: 0740h)

REGISTER DESCRIPTION	REGISTER	OFFSET
ADC10_A control 0	ADC10CTL0	00h
ADC10_A control 1	ADC10CTL1	02h
ADC10_A control 2	ADC10CTL2	04h
ADC10_A window comparator low threshold	ADC10LO	06h
ADC10_A window comparator high threshold	ADC10HI	08h
ADC10_A memory control 0	ADC10MCTL0	0Ah
ADC10_A conversion memory	ADC10MCTL0	12h
ADC10_A interrupt enable	ADC10IE	1Ah
ADC10_A interrupt flags	ADC10IGH	1Ch
ADC10_A interrupt vector word	ADC10IV	1Eh

Table 6-60. SD24_B Registers (Base Address: 0800h)

REGISTER DESCRIPTION	REGISTER	OFFSET
SD24_B control 0	SD24BCTL0	00h
SD24_B control 1	SD24BCTL1	02h
SD24_B trigger control	SD24BTRGCTL	04h
SD24_B trigger OSR control	SD24BTRGOSR	06h
SD24_B trigger preload	SD24BTRGPRE	08h
SD24_B interrupt flag	SD24BIFG	0Ah
SD24_B interrupt enable	SD24BIE	0Ch
SD24_B interrupt vector	SD24BIV	0Eh
SD24_B converter 0 control	SD24BCCTL0	10h
SD24_B converter 0 input control	SD24BINCTL0	12h
SD24_B converter 0 OSR control	SD24BOSR0	14h
SD24_B converter 0 preload	SD24BPRE0	16h
SD24_B converter 1 control	SD24BCCTL1	18h
SD24_B converter 1 input control	SD24BINCTL1	1Ah
SD24_B converter 1 OSR control	SD24BOSR1	1Ch
SD24_B converter 1 preload	SD24BPRE1	1Eh
SD24_B converter 2 control	SD24BCCTL2	20h
SD24_B converter 2 input control	SD24BINCTL2	22h
SD24_B converter 2 OSR control	SD24BOSR2	24h
SD24_B converter 2 preload	SD24BPRE2	26h
SD24_B converter 3 control	SD24BCCTL3	28h
SD24_B converter 3 input control	SD24BINCTL3	2Ah
SD24_B converter 3 OSR control	SD24BOSR3	2Ch
SD24_B converter 3 preload	SD24BPRE3	2Eh
SD24_B converter 4 control	SD24BCCTL4	30h
SD24_B converter 4 input control	SD24BINCTL4	32h
SD24_B converter 4 OSR control	SD24BOSR4	34h
SD24_B converter 4 preload	SD24BPRE4	36h
SD24_B converter 5 control	SD24BCCTL5	38h
SD24_B converter 5 Input control	SD24BINCTL5	3Ah
SD24_B converter 5 OSR control	SD24BOSR5	3Ch
SD24_B converter 5 preload	SD24BPRE5	3Eh
SD24_B converter 6 control	SD24BCCTL6	40h
SD24_B converter 6 Input control	SD24BINCTL6	42h
SD24_B converter 6 OSR control	SD24BOSR6	44h
SD24_B converter 6 preload	SD24BPRE6	46h
SD24_B converter 0 conversion memory low word	SD24BMEML0	50h
SD24_B converter 0 conversion memory high word	SD24BMEMH0	52h
SD24_B converter 1 conversion memory low word	SD24BMEML1	54h
SD24_B converter 1 conversion memory high word	SD24BMEMH1	56h
SD24_B converter 2 conversion memory low word	SD24BMEML2	58h
SD24_B converter 2 conversion memory high word	SD24BMEMH2	5Ah
SD24_B converter 3 conversion memory low word	SD24BMEML3	5Ch
SD24_B converter 3 conversion memory high word	SD24BMEMH3	5Eh
SD24_B converter 4 conversion memory low word	SD24BMEML4	60h
SD24_B converter 4 conversion memory high word	SD24BMEMH4	62h
SD24_B converter 5 conversion memory low word	SD24BMEML5	64h

Copyright © 2014–2018, Texas Instruments Incorporated

Table 6-60. SD24_B Registers (Base Address: 0800h) (continued)

REGISTER DESCRIPTION	REGISTER	OFFSET
SD24_B converter 5 conversion memory high word	SD24BMEMH5	66h
SD24_B converter 6 conversion memory low word	SD24BMEML6	68h
SD24_B converter 6 conversion memory high word	SD24BMEMH6	6Ah

Table 6-61. Comparator_B Register (Base Address: 08C0h)

REGISTER DESCRIPTION	REGISTER	OFFSET
Comp_B control 0	CBCTL0	00h
Comp_B control 1	CBCTL1	02h
Comp_B control 2	CBCTL2	04h
Comp_B control 3	CBCTL3	06h
Comp_B interrupt	CBINT	0Ch
Comp_B interrupt vector word	CBIV	0Eh

Table 6-62. Auxiliary Supply Registers (Base Address: 09E0h)

REGISTER DESCRIPTION	REGISTER	OFFSET
Auxiliary supply control 0	AUXCTL0	00h
Auxiliary supply control 1	AUXCTL1	02h
Auxiliary supply control 2	AUXCTL2	04h
AUX2 charger control	AUX2CHCTL	12h
AUX3 charger control	AUX3CHCTL	14h
AUX ADC control	AUXADCCTL	16h
AUX interrupt flag	AUXIFG	1Ah
AUX interrupt enable	AUXIE	1Ch
AUX interrupt vector word	AUXIV	1Eh

Copyright © 2014–2018, Texas Instruments Incorporated

Table 6-63. LCD_C Registers (Base Address: 0A00h)

REGISTER DESCRIPTION	REGISTER	OFFSET
LCD_C control 0	LCDCCTL0	000h
LCD_C control 1	LCDCCTL1	002h
LCD_C blinking control	LCDCBLKCTL	004h
LCD_C memory control	LCDCMEMCTL	006h
LCD_C voltage control	LCDCVCTL	008h
LCD_C port control 0	LCDCPCTL0	00Ah
LCD_C port control 1	LCDCPCTL1	00Ch
LCD_C port control 2	LCDCPCTL2	00Eh
LCD_C charge pump control	LCDCCPCTL	012h
LCD_C interrupt vector	LCDCIV	01Eh
Static and 2- to 4-mux modes		
LCD_C memory 1	LCDM1	020h
LCD_C memory 2	LCDM2	021h
⋮	⋮	⋮
LCD_C memory 20	LCDM20	033h
LCD_C blinking memory 1	LCDBM1	040h
LCD_C blinking memory 2	LCDBM2	041h
⋮	⋮	⋮
LCD_C blinking memory 20	LCDBM20	053h
5- to 8-mux modes		
LCD_C memory 1	LCDM1	020h
LCD_C memory 2	LCDM2	021h
⋮	⋮	⋮
LCD_C memory 40	LCDM40	047h

Copyright © 2014–2018, Texas Instruments Incorporated

6.12 Input/Output Diagrams

6.12.1 Port P1 (P1.0 to P1.3) Input/Output With Schmitt Trigger (PEU Package Only)

Figure 6-6 shows the port diagram. Table 6-64 summarizes the selection of the pin functions.

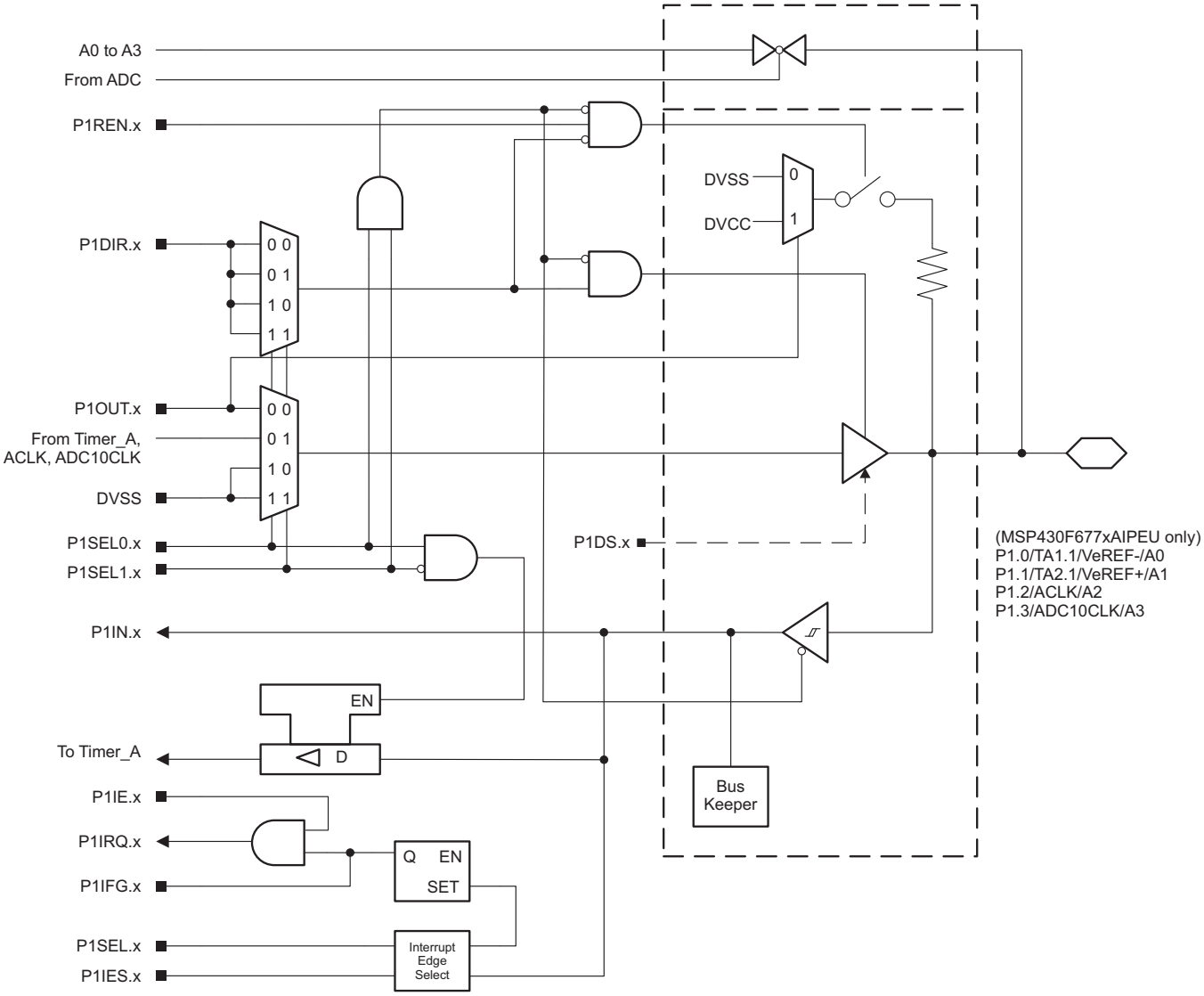

Figure 6-6. Port P1 (P1.0 to P1.3) Diagram (PEU Package Only)

Table 6-64. Port P1 (P1.0 to P1.3) Pin Functions (PEU Package Only)

PIN NAME (P1.x)	x	FUNCTION	CONTROL BITS OR SIGNALS[1]		
			P1DIR.x	P1SEL1.x	P1SEL0.x
P1.0/TA1.1/VeREF-/A0	0	P1.0 (I/O)	I:0; O:1	0	0
		TA1.CCI1A	0	0	1
		TA1.1	1	0	1
		N/A	0	1	0
		DVSS	1	1	0
		VeREF-/A0	X	1	1
P1.1/TA2.1/VeREF+/A1	1	P1.1 (I/O)	I:0; O:1	0	0
		TA2.CCI1A	0	0	1
		TA2.1	1	0	1
		N/A	0	1	0
		DVSS	1	1	0
		VeREF+/A1	X	1	1
P1.2/ACLK/A2	2	P1.2 (I/O)	I:0; O:1	0	0
		ACLK	1	0	1
		N/A	0	1	0
		DVSS	1	1	0
		A2	X	1	1
P1.3/ADC10CLK/A3	3	P1.3 (I/O)	I:0; O:1	0	0
		ADC10CLK	1	0	1
		N/A	0	1	0
		DVSS	1	1	0
		A3	X	1	1

(1) X = don't care

Copyright © 2014–2018, Texas Instruments Incorporated

6.12.2 Port P1 (P1.0 to P1.3) Input/Output With Schmitt Trigger (PZ Package Only)

Figure 6-7 shows the port diagram. Table 6-65 summarizes the selection of the pin functions.

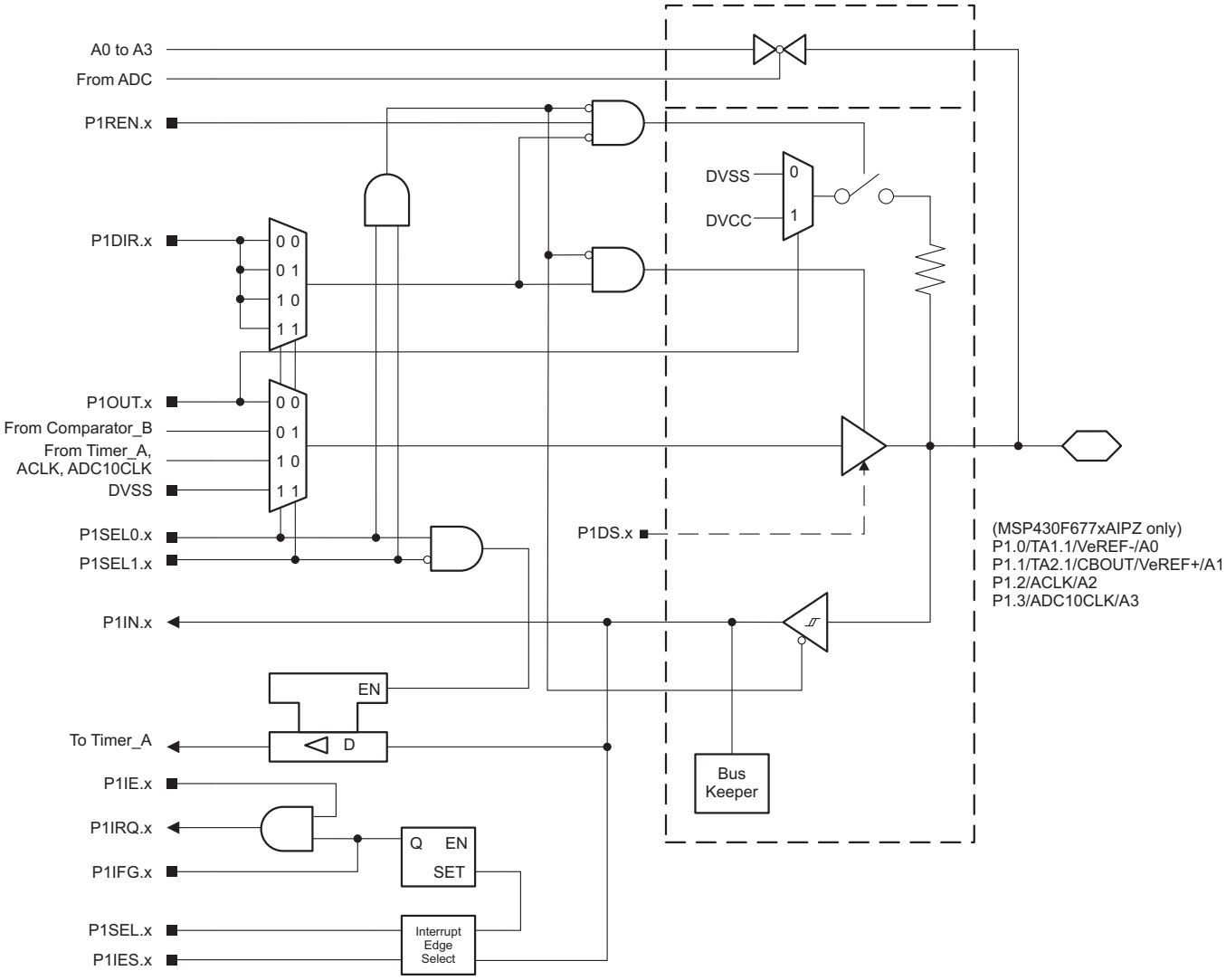

Figure 6-7. Port P1 (P1.0 to P1.3) Diagram (PZ Package Only)

Table 6-65. Port P1 (P1.0 to P1.3) Pin Functions (PZ Package Only)

PIN NAME (P1.x)	x	FUNCTION	CONTROL BITS OR SIGNALS[1]		
			P1DIR.x	P1SEL1.x	P1SEL0.x
P1.0/TA1.1/VeREF-/A0	0	P1.0 (I/O)	I:0; O:1	0	0
		TA1.CCI1A	0	0	1
		TA1.1	1	0	1
		N/A	0	1	0
		DVSS	1	1	0
		VeREF-/A0	X	1	1
P1.1/TA2.1/CBOUT/VeREF+/A1	1	P1.1 (I/O)	I:0; O:1	0	0
		TA2.CCI1A	0	0	1
		TA2.1	1	0	1
		N/A	0	1	0
		CBOUT	1	1	0
		VeREF+/A1	X	1	1
P1.2/ACLK/A2	2	P1.2 (I/O)	I:0; O:1	0	0
		ACLK	1	0	1
		N/A	0	1	0
		DVSS	1	1	0
		A2	X	1	1
P1.3/ADC10CLK/A3	3	P1.3 (I/O)	I:0; O:1	0	0
		ADC10CLK	1	0	1
		N/A	0	1	0
		DVSS	1	1	0
		A3	X	1	1

(1) X = don't care

Copyright © 2014–2018, Texas Instruments Incorporated

6.12.3 Port P1 (P1.4 and P1.5) Input/Output With Schmitt Trigger

Figure 6-8 shows the port diagram. Table 6-66 summarizes the selection of the pin functions.

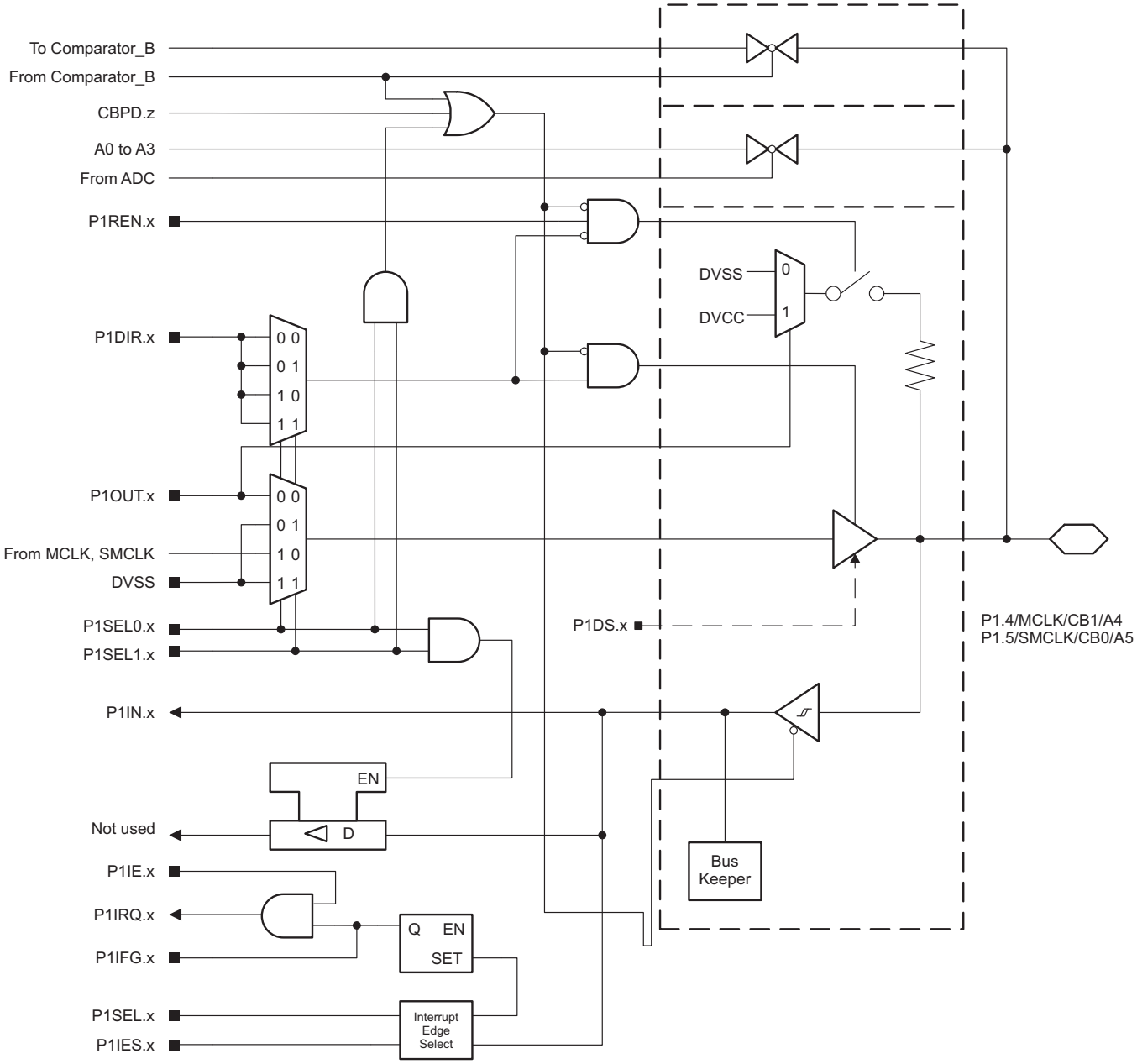

Figure 6-8. Port P1 (P1.4 and P1.5) Diagram

Table 6-66. Port P1 (P1.4 and P1.5) Pin Functions

PIN NAME (P1.x)	x	FUNCTION	CONTROL BITS OR SIGNALS[1]			
			P1DIR.x	P1SEL1.x	P1SEL0.x	CPBD.z
P1.4/MCLK/CB1/A4	4	P1.4 (I/O)	I:0; O:1	0	0	0
		MCLK	1	0	1	0
		N/A	0	1	0	0
		DVSS	1	1	0	0
		A4	X	1	1	0
		CB1	X	X	X	1 (z = 1)
P1.5/SMCLK/CB0/A5	5	P1.5 (I/O)	I:0; O:1	0	0	0
		SMCLK	1	0	1	0
		N/A	0	1	0	0
		DVSS	1	1	0	0
		A5	X	1	1	0
		CB0	X	X	X	1 (z = 0)

(1) X = don't care

Copyright © 2014–2018, Texas Instruments Incorporated

6.12.4 Port P1 (P1.6 and P1.7) Input/Output With Schmitt Trigger

Figure 6-9 shows the port diagram. Table 6-67 summarizes the selection of the pin functions.

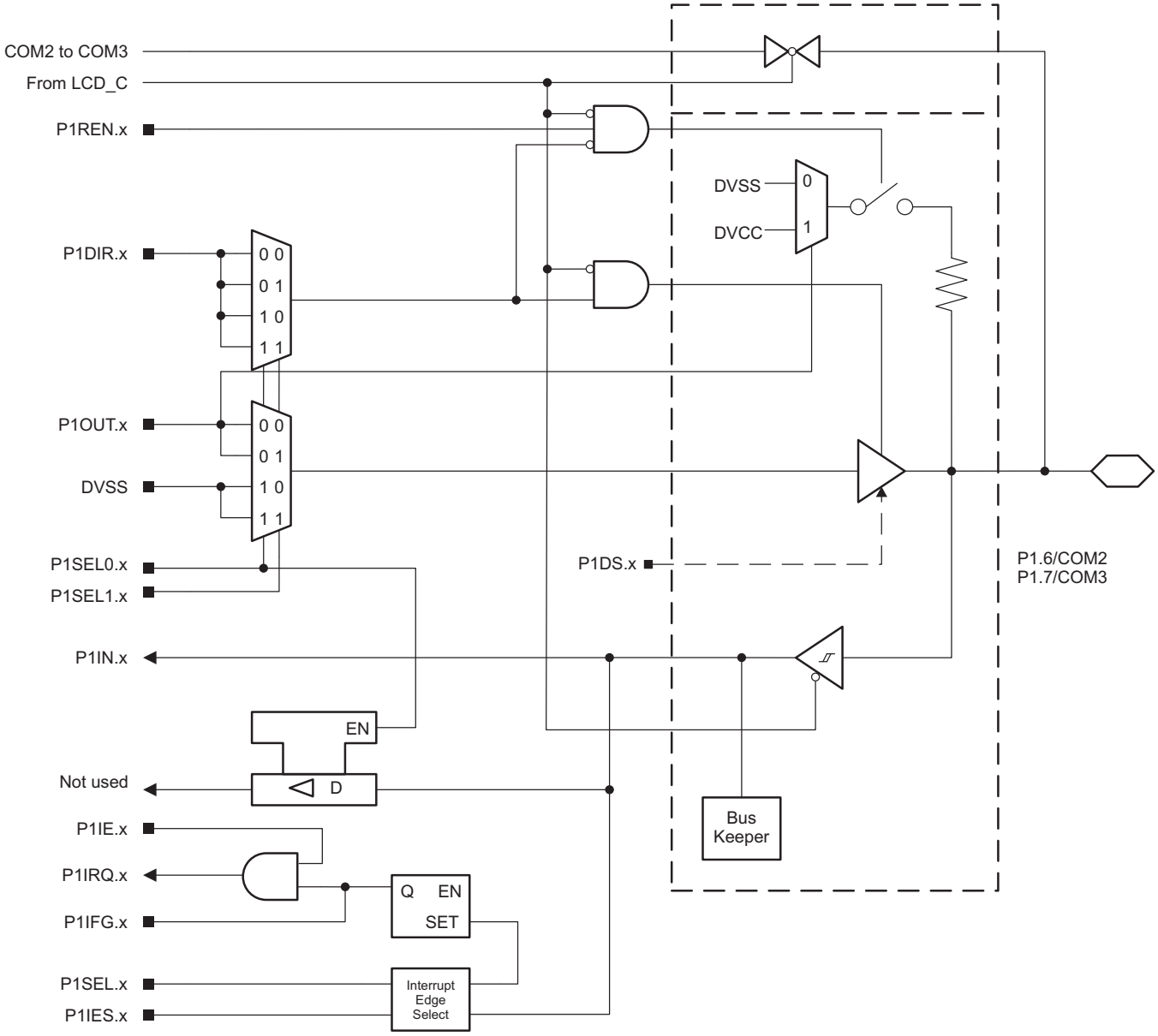

Figure 6-9. Port P1 (P1.6 and P1.7) Diagram

Table 6-67. Port P1 (P1.6 and P1.7) Pin Functions

PIN NAME (P1.x)	x	FUNCTION	CONTROL BITS OR SIGNALS[1]			
			P1DIR.x	P1SEL1.x	P1SEL0.x	COM Enable
P1.6/COM2	6	P1.6 (I/O)	I:0; O:1	X	0	0
		N/A	0	X	1	0
		DVSS	1	X	1	0
		COM2	X	X	X	1
P1.7/COM3	7	P1.7 (I/O)	I:0; O:1	X	0	0
		N/A	0	X	1	0
		DVSS	1	X	1	0
		COM3	X	X	X	1

(1) X = don't care

Copyright © 2014–2018, Texas Instruments Incorporated

6.12.5 Port P2 (P2.0 to P2.7) Input/Output With Schmitt Trigger (PEU Package Only)

Figure 6-10 shows the port diagram. Table 6-68 summarizes the selection of the pin functions.

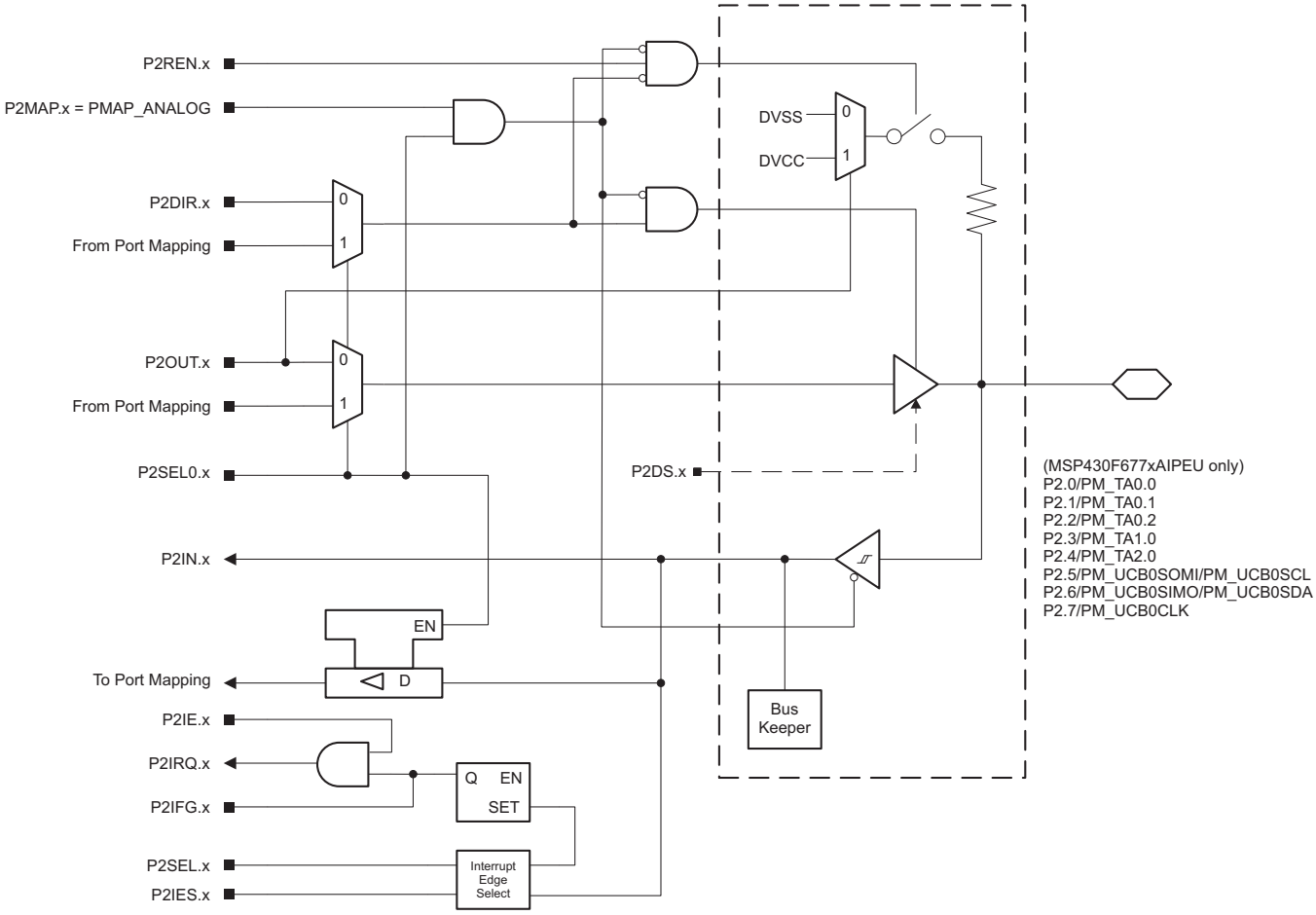

Figure 6-10. Port P2 (P2.0 to P2.7) Diagram (PEU Package Only)

Table 6-68. Port P2 (P2.0 to P2.7) Pin Functions (PEU Package Only)

PIN NAME (P2.x)	x	FUNCTION	CONTROL BITS OR SIGNALS[1]		
			P2DIR.x	P2SEL0.x	P2MAP.x
P2.0/PM_TA0.0	0	P2.0 (I/O)	I:0; O:1	0	X
		Mapped secondary digital function	X	1	≤ 30
		Output driver and input Schmitt trigger disabled	X	1	= 31
P2.1/PM_TA0.1	1	P2.1 (I/O)	I:0; O:1	0	X
		Mapped secondary digital function	X	1	≤ 30
		Output driver and input Schmitt trigger disabled	X	1	= 31
P2.2/PM_TA0.2	2	P2.2 (I/O)	I:0; O:1	0	X
		Mapped secondary digital function	X	1	≤ 30
		Output driver and input Schmitt trigger disabled	X	1	= 31
P2.3/PM_TA1.0	3	P2.3 (I/O)	I:0; O:1	0	X
		Mapped secondary digital function	X	1	≤ 30
		Output driver and input Schmitt trigger disabled	X	1	= 31
P2.4/PM_TA2.0	4	P2.4 (I/O)	I:0; O:1	0	X
		Mapped secondary digital function	X	1	≤ 30
		Output driver and input Schmitt trigger disabled	X	1	= 31
P2.5/PM_UCB0SOMI/ PM_UCB0SCL	5	P2.5 (I/O)	I:0; O:1	0	X
		Mapped secondary digital function	X	1	≤ 30
		Output driver and input Schmitt trigger disabled	X	1	= 31
P2.6/PM_UCB0SIMO/ PM_UCB0SDA	6	P2.6 (I/O)	I:0; O:1	0	X
		Mapped secondary digital function	X	1	≤ 30
		Output driver and input Schmitt trigger disabled	X	1	= 31
P2.7/PM_UCB0CLK	7	P2.7 (I/O)	I:0; O:1	0	X
		Mapped secondary digital function	X	1	≤ 30
		Output driver and input Schmitt trigger disabled	X	1	= 31

(1) X = don't care

Copyright © 2014–2018, Texas Instruments Incorporated

6.12.6 Port P2 (P2.0 to P2.3) Input/Output With Schmitt Trigger (PZ Package Only)

Figure 6-11 shows the port diagram. Table 6-69 summarizes the selection of the pin functions.

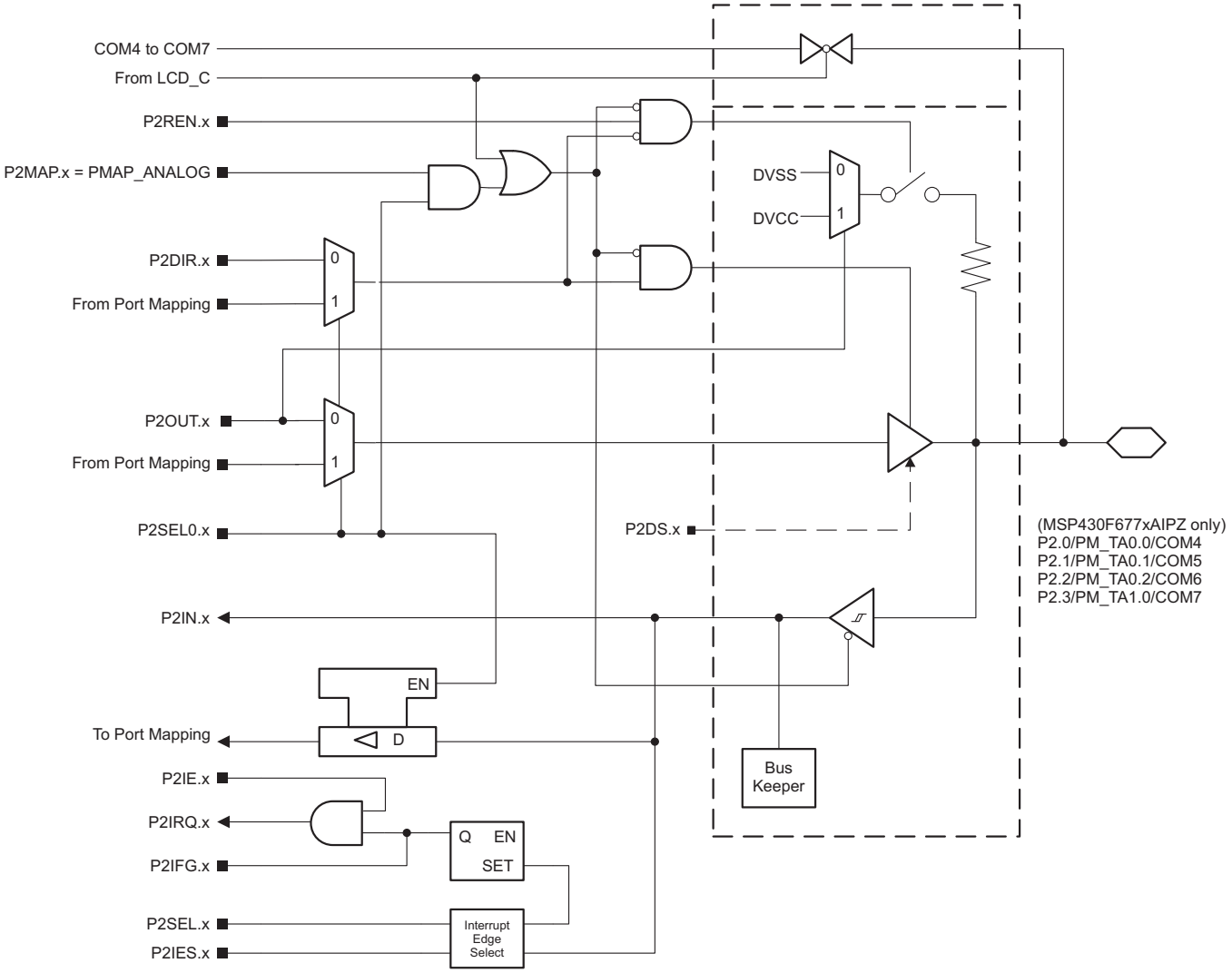

Figure 6-11. Port P2 (P2.0 to P2.3) Diagram (PZ Package Only)

Table 6-69. Port P2 (P2.0 to P2.3) Pin Functions (PZ Package Only)

PIN NAME (P2.x)	x	FUNCTION	CONTROL BITS OR SIGNALS[1]			
			P2DIR.x	P2SEL0.x	P2MAP.x	COM Enable
P2.0/PM_TA0.0/ COM4	0	P2.0 (I/O)	I:0; O:1	0	X	0
		Mapped secondary digital function	X	1	≤ 30	0
		Output driver and input Schmitt trigger disabled	X	1	= 31	0
		COM4	X	X	X	1
P2.1/PM_TA0.1/ COM5	1	P2.1 (I/O)	I:0; O:1	0	X	0
		Mapped secondary digital function	X	1	≤ 30	0
		Output driver and input Schmitt trigger disabled	X	1	= 31	0
		COM5	X	X	X	1
P2.2/PM_TA0.2/ COM6	2	P2.2 (I/O)	I:0; O:1	0	X	0
		Mapped secondary digital function	X	1	≤ 30	0
		Output driver and input Schmitt trigger disabled	X	1	= 31	0
		COM6	X	X	X	1
P2.3/PM_TA1.0/ COM7	3	P2.3 (I/O)	I:0; O:1	0	X	0
		Mapped secondary digital function	X	1	≤ 30	0
		Output driver and input Schmitt trigger disabled	X	1	= 31	0
		COM7	X	X	X	1

(1) X = don't care

Copyright © 2014–2018, Texas Instruments Incorporated

6.12.7 Port P2 (P2.4 to P2.6) Input/Output With Schmitt Trigger (PZ Package Only)

Figure 6-12 shows the port diagram. Table 6-70 summarizes the selection of the pin functions.

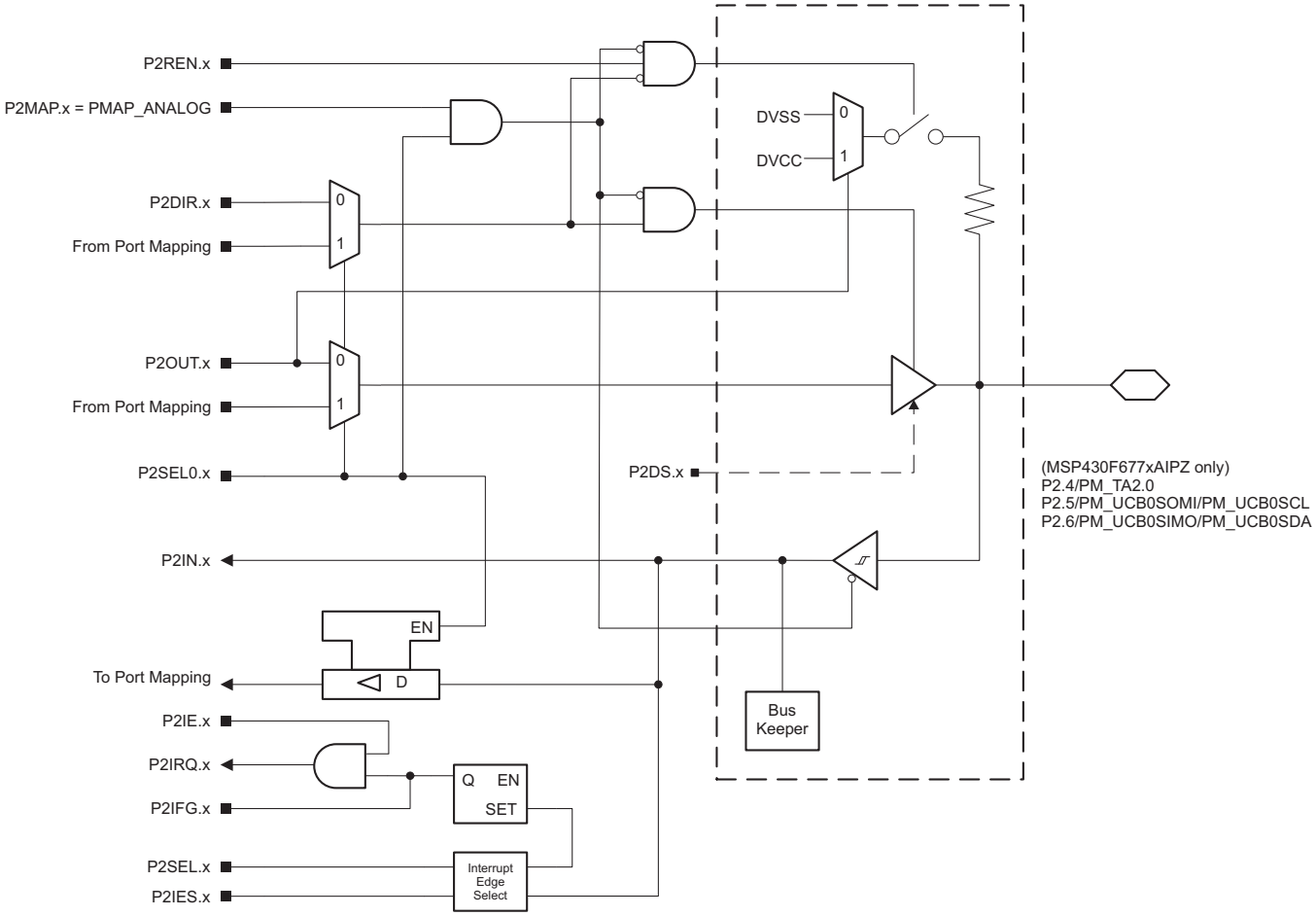

Figure 6-12. Port P2 (P2.4 to P2.6) Diagram (PZ Package Only)

Table 6-70. Port P2 (P2.4 to P2.6) Pin Functions (PZ Package Only)

PIN NAME (P2.x)	x	FUNCTION	CONTROL BITS OR SIGNALS(1)		
			P2DIR.x	P2SEL0.x	P2MAP.x
P2.4/PM_TA2.0/R23	4	P2.4 (I/O)	I:0; O:1	0	X
		Mapped secondary digital function	X	1	≤ 30
		R23	X	1	= 31
P2.5/PM_UCB0SOMI/ PM_UCB0SCL/R13	5	P2.5 (I/O)	I:0; O:1	0	X
		Mapped secondary digital function	X	1	≤ 30
		R13	X	1	= 31
P2.6/PM_UCB0SIMO/ PM_UCB0SDA/R03	6	P2.6 (I/O)	I:0; O:1	0	X
		Mapped secondary digital function	X	1	≤ 30
		R03	X	1	= 31

(1) X = don't care

6.12.8 Port P2 (P2.7) Input/Output With Schmitt Trigger (PZ Package Only)

Figure 6-13 shows the port diagram. Table 6-71 summarizes the selection of the pin functions.

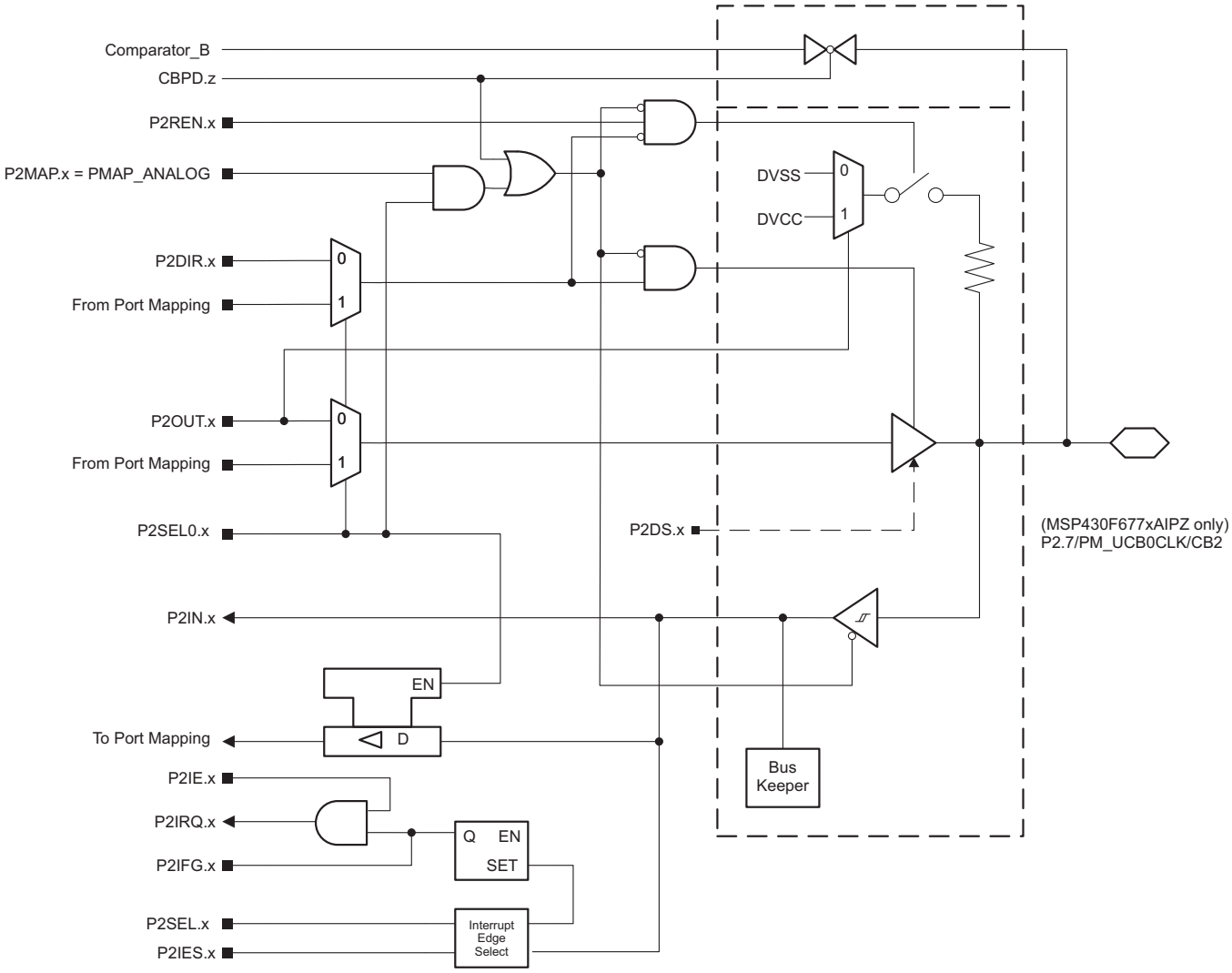

Figure 6-13. Port P2 (P2.7) Diagram (PZ Package Only)

Table 6-71. Port P2 (P2.7) Pin Functions (PZ Package Only)

PIN NAME (P2.x)	x	FUNCTION	CONTROL BITS OR SIGNALS(1)			
			P2DIR.x	P2SEL0.x	P2MAP.x	CBPD.z
P2.7/PM_UCB0CLK/ CB2	7	P2.7 (I/O)	I:0; O:1	0	X	0
		Mapped secondary digital function	X	1	≤ 30	0
		Output driver and input Schmitt trigger disabled	X	1	= 31	0
		CB2	X	X	X	1 (z = 2)

(1) X = don't care

Copyright © 2014–2018, Texas Instruments Incorporated

6.12.9 Ports P3 (P3.0 to P3.7) Input/Output With Schmitt Trigger (PEU Package Only)

Figure 6-14 shows the port diagram. Table 6-72 summarizes the selection of the pin functions.

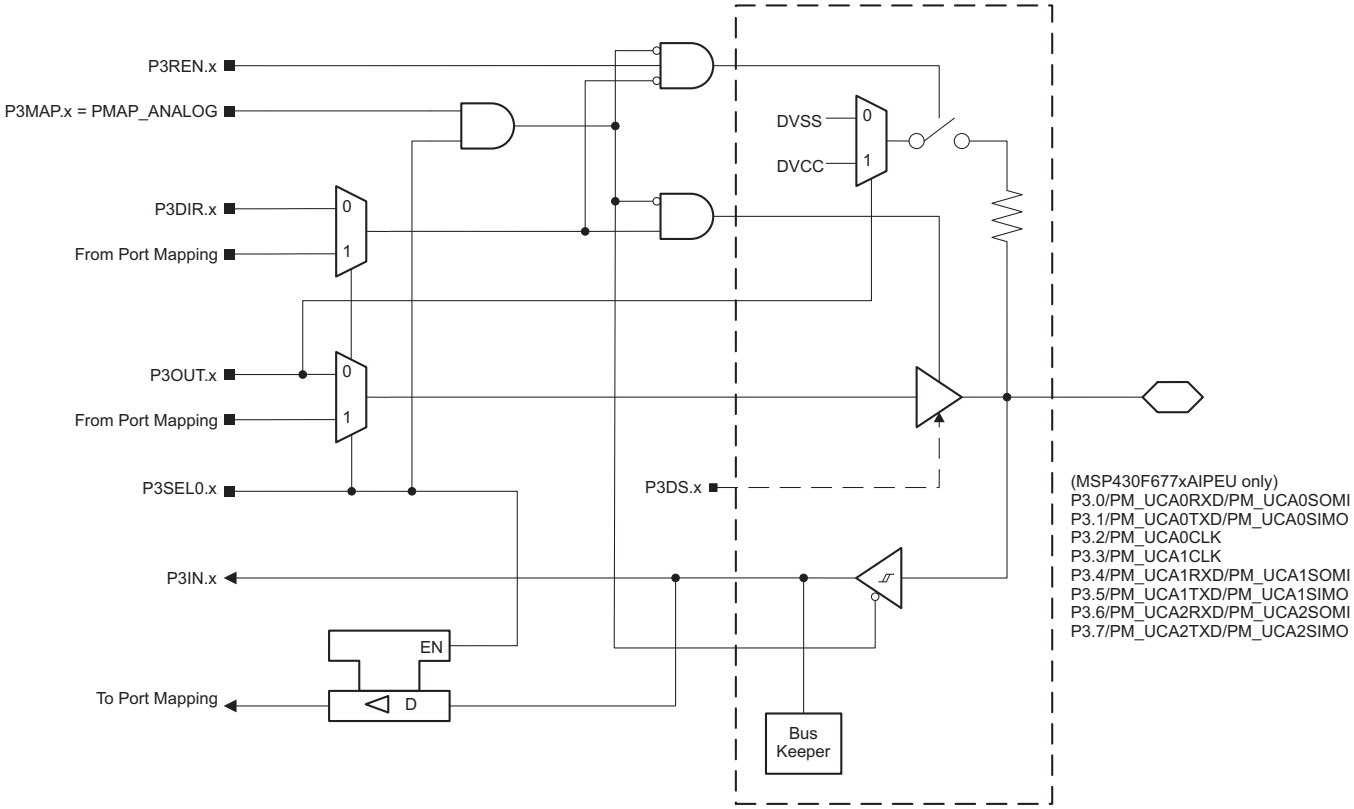

Figure 6-14. Ports P3 (P3.0 to P3.7) Diagram (PEU Package Only)

Table 6-72. Ports P3 (P3.0 to P3.7) Pin Functions (PEU Package Only)

PIN NAME (P3.x)	x	FUNCTION	CONTROL BITS OR SIGNALS[1]		
			P3DIR.x	P3SEL0.x	P3MAP.x
P3.0/PM_UCA0RXD/ PM_UCA0SOMI	0	P3.0 (I/O)	I:0; O:1	0	X
		Mapped secondary digital function	X	1	≤ 30
		Output driver and input Schmitt trigger disabled	X	1	= 31
P3.1/PM_UCA0TXD/ PM_UCA0SIMO	1	P3.1 (I/O)	I:0; O:1	0	X
		Mapped secondary digital function	X	1	≤ 30
		Output driver and input Schmitt trigger disabled	X	1	= 31
P3.2/PM_UCA0CLK	2	P3.2 (I/O)	I:0; O:1	0	X
		Mapped secondary digital function	X	1	≤ 30
		Output driver and input Schmitt trigger disabled	X	1	= 31
P3.3/PM_UCA1CLK	3	P3.3 (I/O)	I:0; O:1	0	X
		Mapped secondary digital function	X	1	≤ 30
		Output driver and input Schmitt trigger disabled	X	1	= 31
P3.4/PM_UCA1RXD/ PM_UCA1SOMI	4	P3.4 (I/O)	I:0; O:1	0	X
		Mapped secondary digital function	X	1	≤ 30
		Output driver and input Schmitt trigger disabled	X	1	= 31
P3.5/PM_UCA1TXD/ PM_UCA1SIMO	5	P3.5 (I/O)	I:0; O:1	0	X
		Mapped secondary digital function	X	1	≤ 30
		Output driver and input Schmitt trigger disabled	X	1	= 31
P3.6/PM_UCA2RXD/ PM_UCA2SOMI	6	P3.6 (I/O)	I:0; O:1	0	X
		Mapped secondary digital function	X	1	≤ 30
		Output driver and input Schmitt trigger disabled	X	1	= 31
P3.7/PM_UCA2TXD/ PM_UCA2SIMO	7	P3.7 (I/O)	I:0; O:1	0	X
		Mapped secondary digital function	X	1	≤ 30
		Output driver and input Schmitt trigger disabled	X	1	= 31

(1) X = don't care

Copyright © 2014–2018, Texas Instruments Incorporated

6.12.10 Ports P3 (P3.0) Input/Output With Schmitt Trigger (PZ Package Only)

Figure 6-15 shows the port diagram. Table 6-73 summarizes the selection of the pin functions.

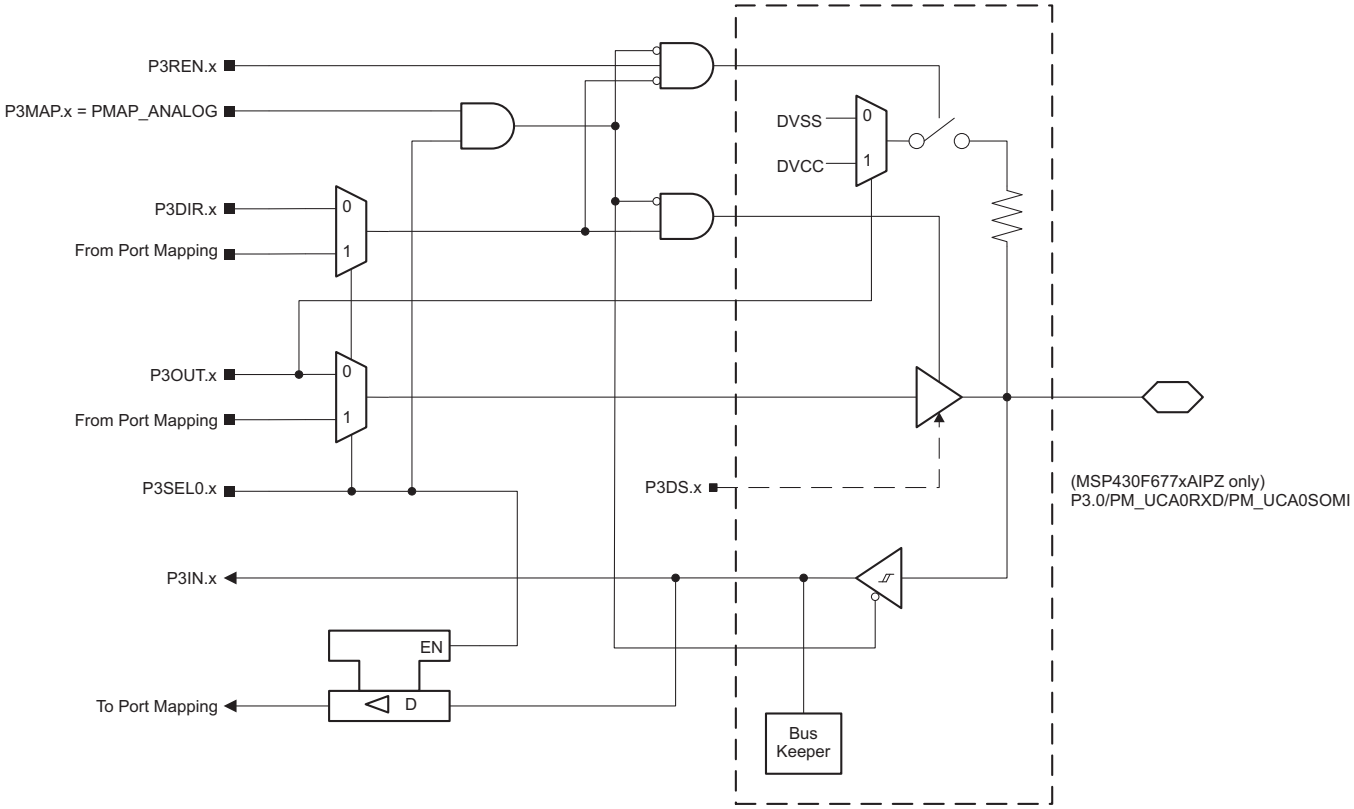

Figure 6-15. Ports P3 (P3.0) Diagram (PZ Package Only)

Table 6-73. Ports P3 (P3.0) Pin Functions (PZ Package Only)

PIN NAME (P3.x)	x	FUNCTION	CONTROL BITS OR SIGNALS(1)		
			P3DIR.x	P3SEL0.x	P3MAP.x
P3.0/PM_UCA0RXD/ PM_UCA0SOMI	0	P3.0 (I/O)	I:0; O:1	0	X
		Mapped secondary digital function	X	1	≤ 30
		Output driver and input Schmitt trigger disabled	X	1	= 31

(1) X = don't care

6.12.11 Ports P3 (P3.1 to P3.7) Input/Output With Schmitt Trigger (PZ Package Only)

Figure 6-16 shows the port diagram. Table 6-74 summarizes the selection of the pin functions.

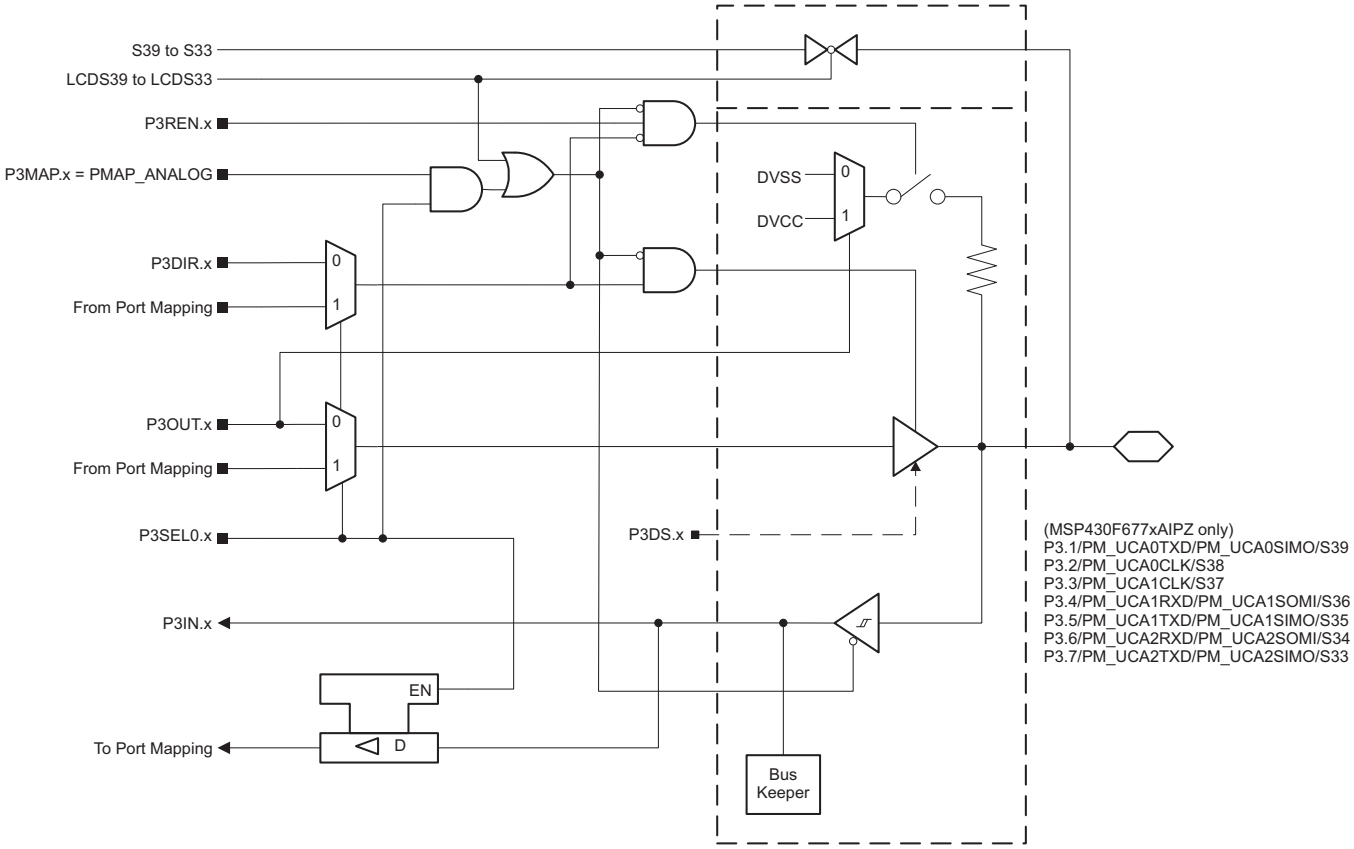

Figure 6-16. Ports P3 (P3.1 to P3.7) Diagram (PZ Package Only)

Copyright © 2014–2018, Texas Instruments Incorporated

Table 6-74. Ports P3 (P3.1 to P3.7) Pin Functions (PZ Package Only)

PIN NAME (P3.x)	x	FUNCTION	CONTROL BITS OR SIGNALS[1]			
			P3DIR.x	P3SEL0.x	P3MAP.x	LCDS39 to LCDS33
P3.1/PM_UCA0TXD/ PM_UCA0SIMO/S39	1	P3.1 (I/O)	I:0; O:1	0	X	0
		Mapped secondary digital function	X	1	≤ 30	0
		Output driver and input Schmitt trigger disabled	X	1	= 31	0
		S39	X	X	X	1
P3.2/PM_UCA0CLK/ S38	2	P3.2 (I/O)	I:0; O:1	0	X	0
		Mapped secondary digital function	X	1	≤ 30	0
		Output driver and input Schmitt trigger disabled	X	1	= 31	0
		S38	X	X	X	1
P3.3/PM_UCA1CLK/ S37	3	P3.3 (I/O)	I:0; O:1	0	X	0
		Mapped secondary digital function	X	1	≤ 30	0
		Output driver and input Schmitt trigger disabled	X	1	= 31	0
		S37	X	X	X	1
P3.4/PM_UCA1RXD/ PM_UCA1SOMI/S36	4	P3.4 (I/O)	I:0; O:1	0	X	0
		Mapped secondary digital function	X	1	≤ 30	0
		Output driver and input Schmitt trigger disabled	X	1	= 31	0
		S36	X	X	X	1
P3.5/PM_UCA1TXD/ PM_UCA1SIMO/S35	5	P3.5 (I/O)	I:0; O:1	0	X	0
		Mapped secondary digital function	X	1	≤ 30	0
		Output driver and input Schmitt trigger disabled	X	1	= 31	0
		S35	X	X	X	1
P3.6/PM_UCA2RXD/ PM_UCA2SOMI/S34	6	P3.6 (I/O)	I:0; O:1	0	X	0
		Mapped secondary digital function	X	1	≤ 30	0
		Output driver and input Schmitt trigger disabled	X	1	= 31	0
		S34	X	X	X	1
P3.7/PM_UCA2TXD/ PM_UCA2SIMO/S33	7	P3.7 (I/O)	I:0; O:1	0	X	0
		Mapped secondary digital function	X	1	≤ 30	0
		Output driver and input Schmitt trigger disabled	X	1	= 31	0
		S33	X	X	X	1

(1) X = don't care

6.12.12 Port P4 (P4.0 to P4.7) Input/Output With Schmitt Trigger (PEU Package Only)

Figure 6-17 shows the port diagram. Table 6-75 summarizes the selection of the pin functions.

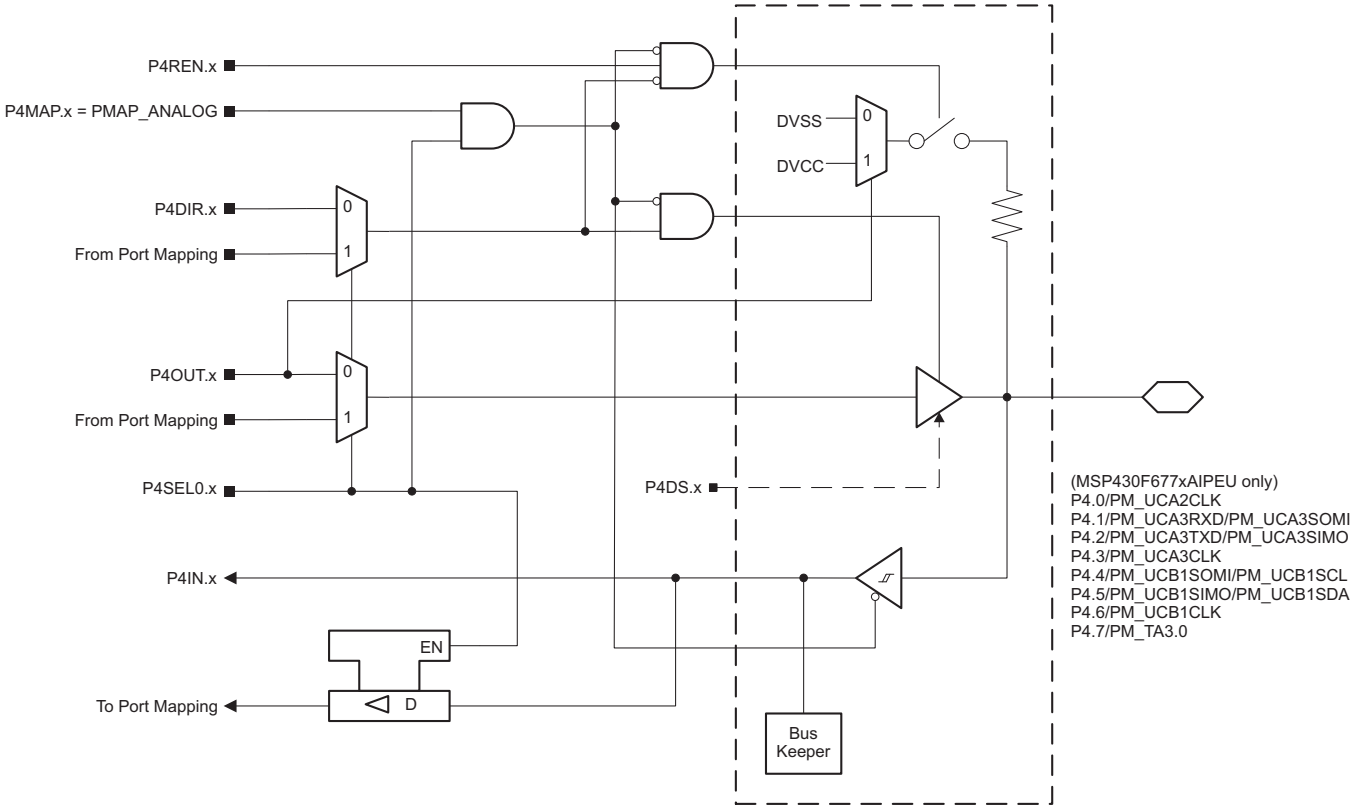

Figure 6-17. Port P4 (P4.0 to P4.7) Diagram (PEU Package Only)

Copyright © 2014–2018, Texas Instruments Incorporated

Table 6-75. Port P4 (P4.0 to P4.7) Pin Functions (PEU Package Only)

PIN NAME (P4.x)	x	FUNCTION	CONTROL BITS OR SIGNALS(1)		
			P4DIR.x	P4SEL0.x	P4MAP.x
P4.0/PM_UCA2CLK	0	P4.0 (I/O)	I:0; O:1	0	X
		Mapped secondary digital function	X	1	≤ 30
		Output driver and input Schmitt trigger disabled	X	1	= 31
P4.1/PM_UCA3RXD/ PM_UCA3SOMI	1	P4.1 (I/O)	I:0; O:1	0	X
		Mapped secondary digital function	X	1	≤ 30
		Output driver and input Schmitt trigger disabled	X	1	= 31
P4.2/PM_UCA3TXD/ PM_UCA3SIMO	2	P4.2 (I/O)	I:0; O:1	0	X
		Mapped secondary digital function	X	1	≤ 30
		Output driver and input Schmitt trigger disabled	X	1	= 31
P4.3/PM_UCA3CLK	3	P4.3 (I/O)	I:0; O:1	0	X
		Mapped secondary digital function	X	1	≤ 30
		Output driver and input Schmitt trigger disabled	X	1	= 31
P4.4/PM_UCB1SOMI/ PM_UCB1SCL	4	P4.4 (I/O)	I:0; O:1	0	X
		Mapped secondary digital function	X	1	≤ 30
		Output driver and input Schmitt trigger disabled	X	1	= 31
P4.5/PM_UCB1SIMO/ PM_UCB1SDA	5	P4.5 (I/O)	I:0; O:1	0	X
		Mapped secondary digital function	X	1	≤ 30
		Output driver and input Schmitt trigger disabled	X	1	= 31
P4.6/PM_UCB1CLK	6	P4.6 (I/O)	I:0; O:1	0	X
		Mapped secondary digital function	X	1	≤ 30
		Output driver and input Schmitt trigger disabled	X	1	= 31
P4.7/PM_TA3.0	7	P4.7 (I/O)	I:0; O:1	0	X
		Mapped secondary digital function	X	1	≤ 30
		Output driver and input Schmitt trigger disabled	X	1	= 31

(1) X = don't care

6.12.13 Port P4 (P4.0 to P4.7) Input/Output With Schmitt Trigger (PZ Package Only)

Figure 6-18 shows the port diagram. Table 6-76 summarizes the selection of the pin functions.

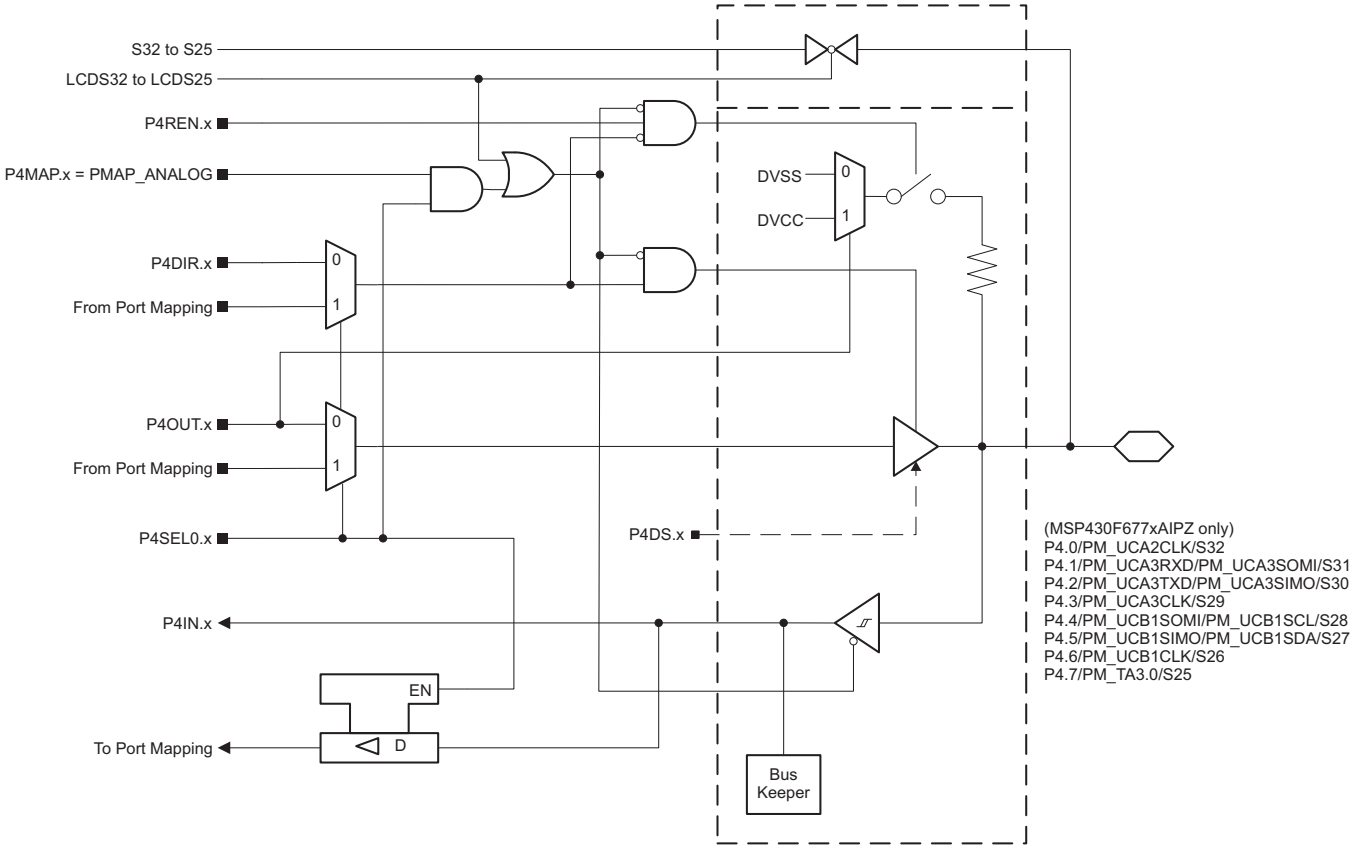

Figure 6-18. Port P4 (P4.0 to P4.7) Diagram (PZ Package Only)

Copyright © 2014–2018, Texas Instruments Incorporated

Table 6-76. Port P4 (P4.0 to P4.7) Pin Functions (PZ Package Only)

PIN NAME (P4.x)	x	FUNCTION	CONTROL BITS OR SIGNALS[1]			
			P4DIR.x	P4SEL0.x	P4MAP.x	LCD32 to LCDS25
P4.0/PM_UCA2CLK/ S32	0	P4.0 (I/O)	I:0; O:1	0	X	0
		Mapped secondary digital function	X	1	≤ 30	0
		Output driver and input Schmitt trigger disabled	X	1	= 31	0
		S32	X	X	X	1
P4.1/PM_UCA3RXD/ PM_UCA3SOMI/S31	1	P4.1 (I/O)	I:0; O:1	0	X	0
		Mapped secondary digital function	X	1	≤ 30	0
		Output driver and input Schmitt trigger disabled	X	1	= 31	0
		S31	X	X	X	1
P4.2/PM_UCA3TXD/ PM_UCA3SIMO/S30	2	P4.2 (I/O)	I:0; O:1	0	X	0
		Mapped secondary digital function	X	1	≤ 30	0
		Output driver and input Schmitt trigger disabled	X	1	= 31	0
		S30	X	X	X	1
P4.3/PM_UCA3CLK/ S29	3	P4.3 (I/O)	I:0; O:1	0	X	0
		Mapped secondary digital function	X	1	≤ 30	0
		Output driver and input Schmitt trigger disabled	X	1	= 31	0
		S29	X	X	X	1
P4.4/ PM_UCB1SOMI/ PM_UCB1SCL/S28	4	P4.4 (I/O)	I:0; O:1	0	X	0
		Mapped secondary digital function	X	1	≤ 30	0
		Output driver and input Schmitt trigger disabled	X	1	= 31	0
		S28	X	X	X	1
P4.5/ PM_UCB1SIMO/ PM_UCB1SDA/S27	5	P4.5 (I/O)	I:0; O:1	0	X	0
		Mapped secondary digital function	X	1	≤ 30	0
		Output driver and input Schmitt trigger disabled	X	1	= 31	0
		S27	X	X	X	1
P4.6/PM_UCB1CLK/ S26	6	P4.6 (I/O)	I:0; O:1	0	X	0
		Mapped secondary digital function	X	1	≤ 30	0
		Output driver and input Schmitt trigger disabled	X	1	= 31	0
		S26	X	X	X	1
P4.7/PM_TA3.0/S25	7	P4.7 (I/O)	I:0; O:1	0	X	0
		Mapped secondary digital function	X	1	≤ 30	0
		Output driver and input Schmitt trigger disabled	X	1	= 31	0
		S25	X	X	X	1

(1) X = don't care

6.12.14 Port P5 (P5.0 to P5.3) Input/Output With Schmitt Trigger (PEU Package Only)

Figure 6-19 shows the port diagram. Table 6-77 summarizes the selection of the pin functions.

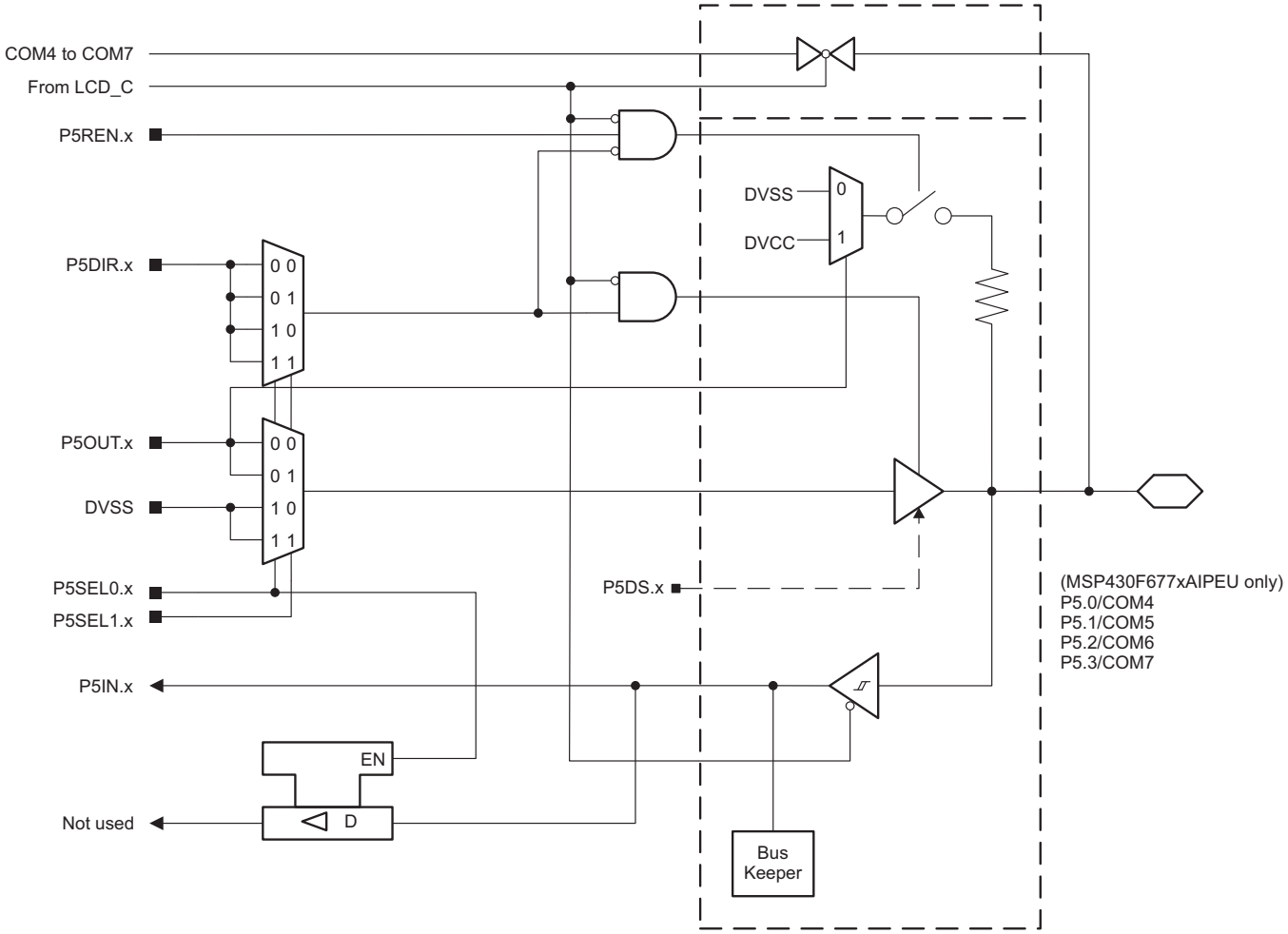

Figure 6-19. Port P5 (P5.0 to P5.3) Diagram (PEU Package Only)

Copyright © 2014–2018, Texas Instruments Incorporated

Table 6-77. Port P5 (P5.0 to P5.3) Pin Functions (PEU Package Only)

PIN NAME (P5.x)	x	FUNCTION	CONTROL BITS OR SIGNALS[1]			
			P5DIR.x	P5SEL1.x	P5SEL0.x	COM Enable
P5.0/COM4	0	P5.0 (I/O)	I:0; O:1	X	0	0
		N/A	0	X	1	0
		DVSS	1	X	1	0
		COM4	X	X	X	1
P5.1/COM5	1	P5.1 (I/O)	I:0; O:1	X	0	0
		N/A	0	X	1	0
		DVSS	1	X	1	0
		COM5	X	X	X	1
P5.2/COM6	2	P5.2 (I/O)	I:0; O:1	X	0	0
		N/A	0	X	1	0
		DVSS	1	X	1	0
		COM6	X	X	X	1
P5.3/COM7	3	P5.3 (I/O)	I:0; O:1	X	0	0
		N/A	0	X	1	0
		DVSS	1	X	1	0
		COM7	X	X	X	1

(1) X = don't care

6.12.15 Port P5 (P5.4 to P5.6) Input/Output With Schmitt Trigger (PEU Package Only)

Figure 6-20 shows the port diagram. Table 6-78 summarizes the selection of the pin functions.

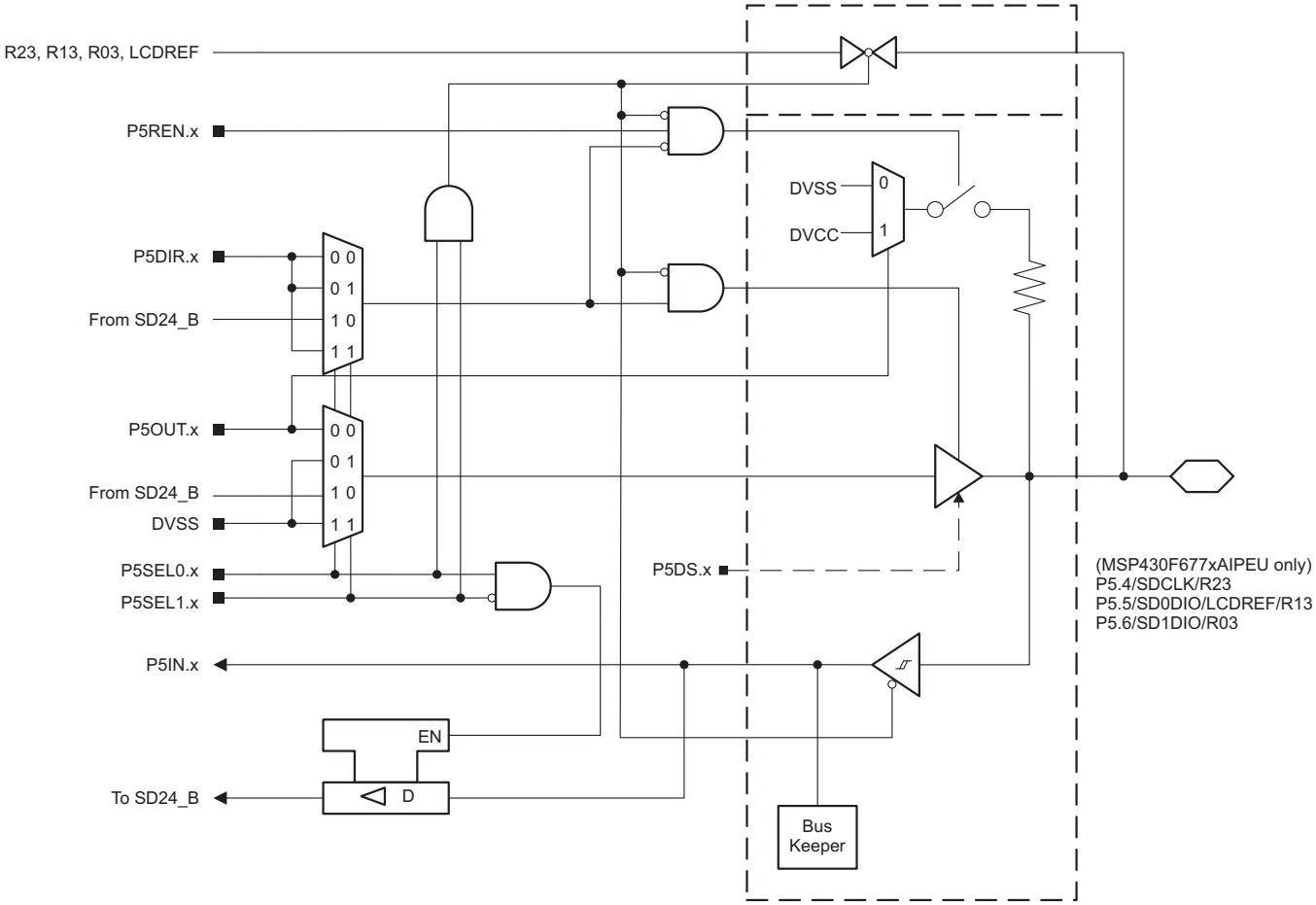

Figure 6-20. Port P5 (P5.4 to P5.6) Diagram (PEU Package Only)

Copyright © 2014–2018, Texas Instruments Incorporated

Table 6-78. Port P5 (P5.4 to P5.6) Pin Functions (PEU Package Only)

PIN NAME (P5.x)	x	FUNCTION	CONTROL BITS OR SIGNALS[1]		
			P5DIR.x	P5SEL1.x	P5SEL0.x
P5.4/SDCLK/R23	4	P5.4 (I/O)	I:0; O:1	0	0
		Secondary digital function	X	0	1
		N/A	0	1	0
		DVSS	1	1	0
		R23	X	1	1
P5.5/SD0DIO/LCDREF/R13	5	P5.5 (I/O)	I:0; O:1	0	0
		Secondary digital function	X	0	1
		N/A	0	1	0
		DVSS	1	1	0
		LCDREF/R13	X	1	1
PT.6/SD1DIO/R03	6	P5.6 (I/O)	I:0; O:1	0	0
		Secondary digital function	X	0	1
		N/A	0	1	0
		DVSS	1	1	0
		R03	X	1	1

(1) X = don't care

6.12.16 Port P5 (P5.7) Input/Output With Schmitt Trigger (PEU Package Only)

Figure 6-21 shows the port diagram. Table 6-79 summarizes the selection of the pin functions.

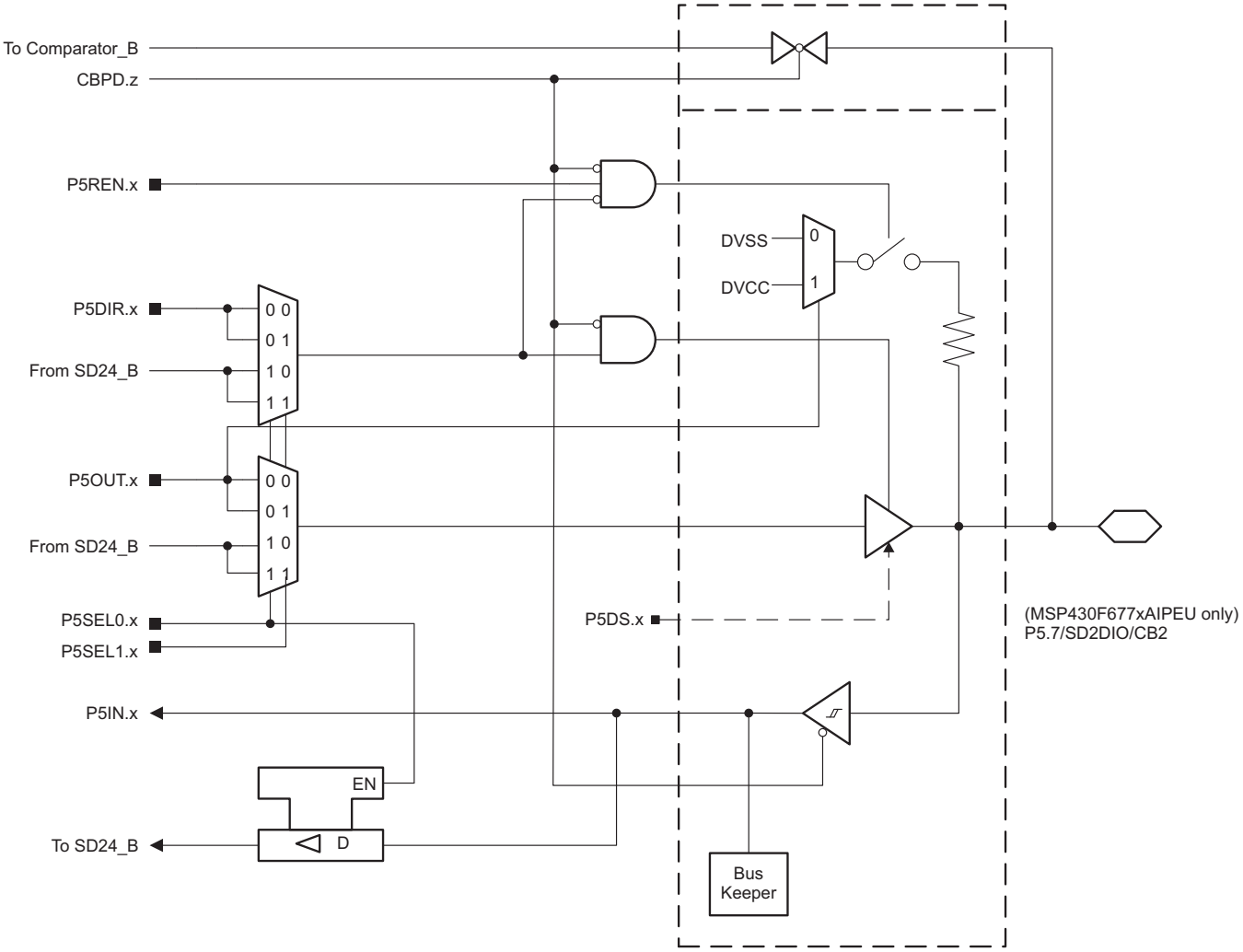

Figure 6-21. Port P5 (P5.7) Diagram (PEU Package Only)

Table 6-79. Port P5 (P5.7) Pin Function (PEU Package Only)

PIN NAME (P5.x)	x	FUNCTION	CONTROL BITS OR SIGNALS[(1)]			
			P5DIR.x	P5SEL1.x	P5SEL0.x	CBPD.z
P5.7/SD2DIO/CB2	7	P5.7 (I/O)	I:0; O:1	X	0	0
		Secondary digital function	X	X	1	0
		CB2	X	X	X	1 (z = 2)

(1) X = don't care

Copyright © 2014–2018, Texas Instruments Incorporated

6.12.17 Port P5 (P5.0 to P5.7) Input/Output With Schmitt Trigger (PZ Package Only)

Figure 6-22 shows the port diagram. Table 6-80 summarizes the selection of the pin functions.

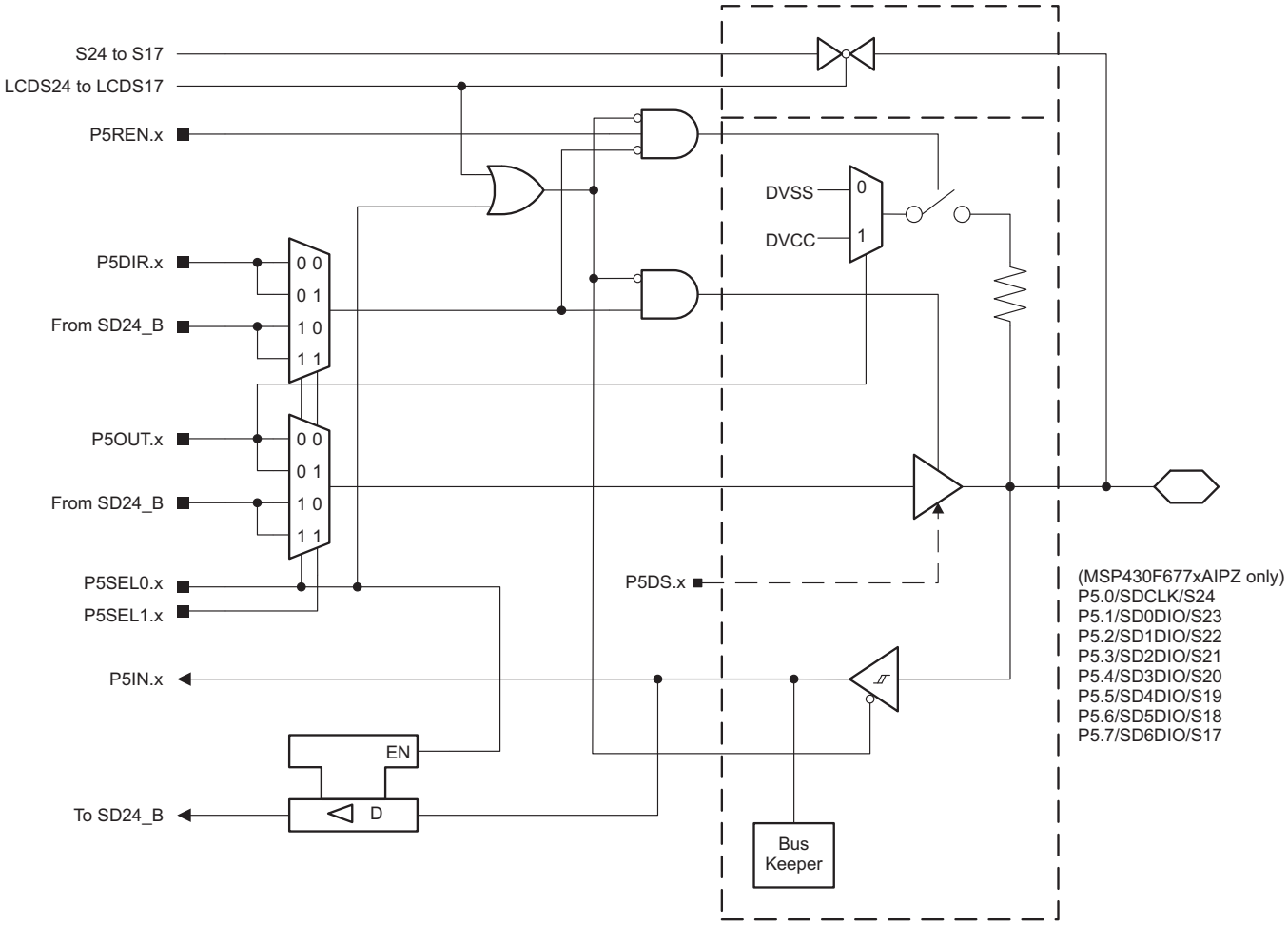

Figure 6-22. Port P5 (P5.0 to P5.7) Diagram (PZ Package Only)

Table 6-80. Port P5 (P5.0 to P5.7) Pin Function (PZ Package Only)

PIN NAME (P5.x)	x	FUNCTION	CONTROL BITS OR SIGNALS[1]			
			P5DIR.x	P5SEL1.x	P5SEL0.x	LCDS24 to LCDS17
P5.0/SDCLK/S24	0	P5.0 (I/O)	I:0; O:1	X	0	0
		Secondary digital function	X	X	1	0
		S24	X	X	X	1
P5.1/SD0DIO/S23	1	P5.1 (I/O)	I:0; O:1	X	0	0
		Secondary digital function	X	X	1	0
		S23	X	X	X	1
P5.2/SD1DIO/S22	2	P5.2 (I/O)	I:0; O:1	X	0	0
		Secondary digital function	X	X	1	0
		S22	X	X	X	1
P5.3/SD2DIO/S21	3	P5.3 (I/O)	I:0; O:1	X	0	0
		Secondary digital function	X	X	1	0
		S21	X	X	X	1
P5.4/SD3DIO/S20	4	P5.4 (I/O)	I:0; O:1	X	0	0
		Secondary digital function	X	X	1	0
		S20	X	X	X	1
P5.5/SD4DIO/S19	5	P5.5 (I/O)	I:0; O:1	X	0	0
		Secondary digital function	X	X	1	0
		S19	X	X	X	1
P5.6/SD5DIO/S18	6	P5.6 (I/O)	I:0; O:1	X	0	0
		Secondary digital function	X	X	1	0
		S18	X	X	X	1
P5.7/SD6DIO/S17	7	P5.7 (I/O)	I:0; O:1	X	0	0
		Secondary digital function	X	X	1	0
		S17	X	X	X	1

(1) X = don't care

Copyright © 2014–2018, Texas Instruments Incorporated

6.12.18 Port P6 (P6.0) Input/Output With Schmitt Trigger (PEU Package Only)

Figure 6-23 shows the port diagram. Table 6-81 summarizes the selection of the pin functions.

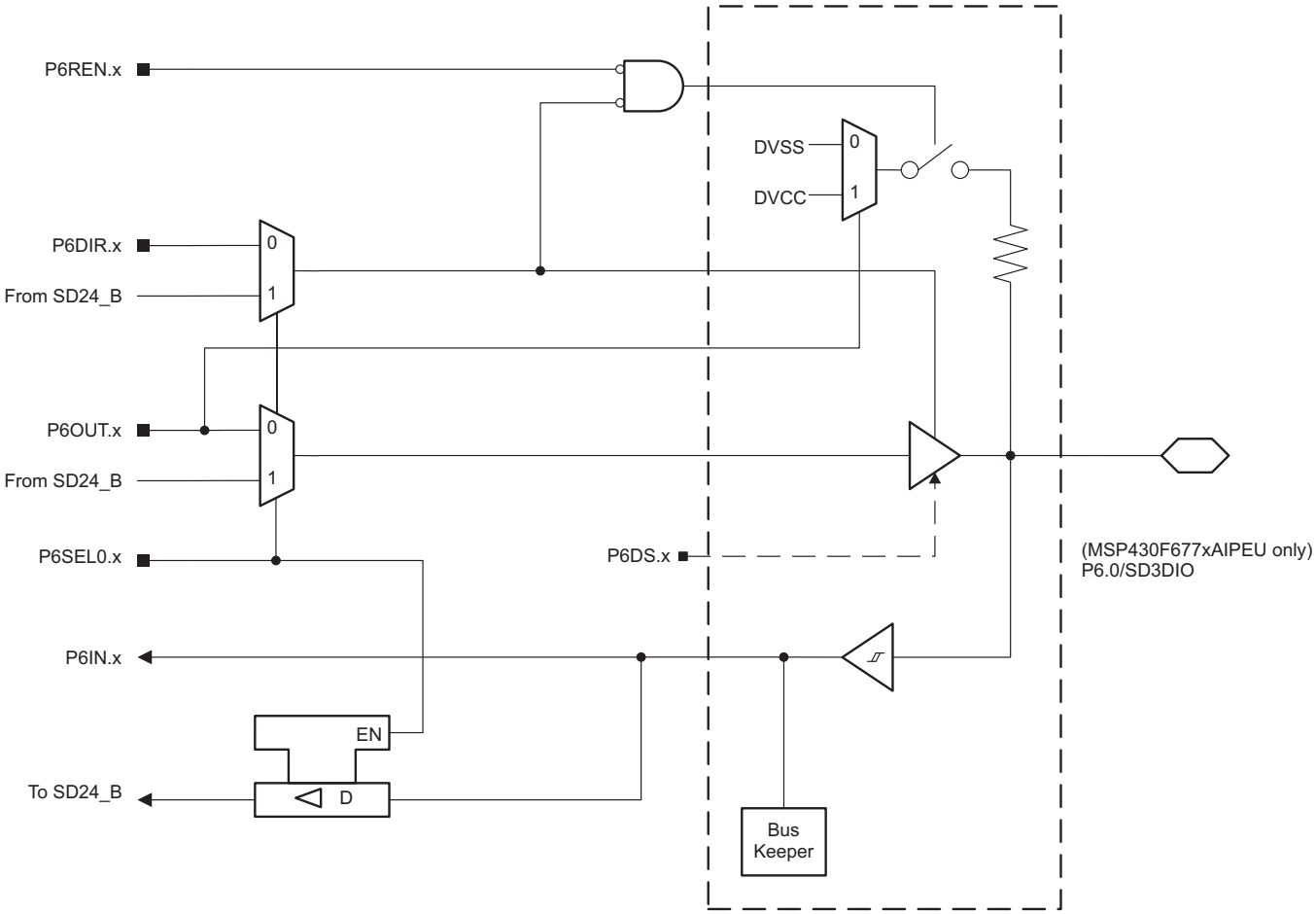

Figure 6-23. Port P6 (P6.0) Diagram (PEU Package Only)

Table 6-81. Port P6 (P6.0) Pin Functions (PEU Package Only)

PIN NAME (P6.x)	x	FUNCTION	CONTROL BITS OR SIGNALS(1)	
			P6DIR.x	P6SEL0.x
P6.0/SD3DIO	0	P6.0 (I/O)	I:0; O:1	0
		Secondary digital function	X	1

(1) X = don't care

6.12.19 Port P6 (P6.1 to P6.3) Input/Output With Schmitt Trigger (PEU Package Only)

Figure 6-24 shows the port diagram. Table 6-82 summarizes the selection of the pin functions.

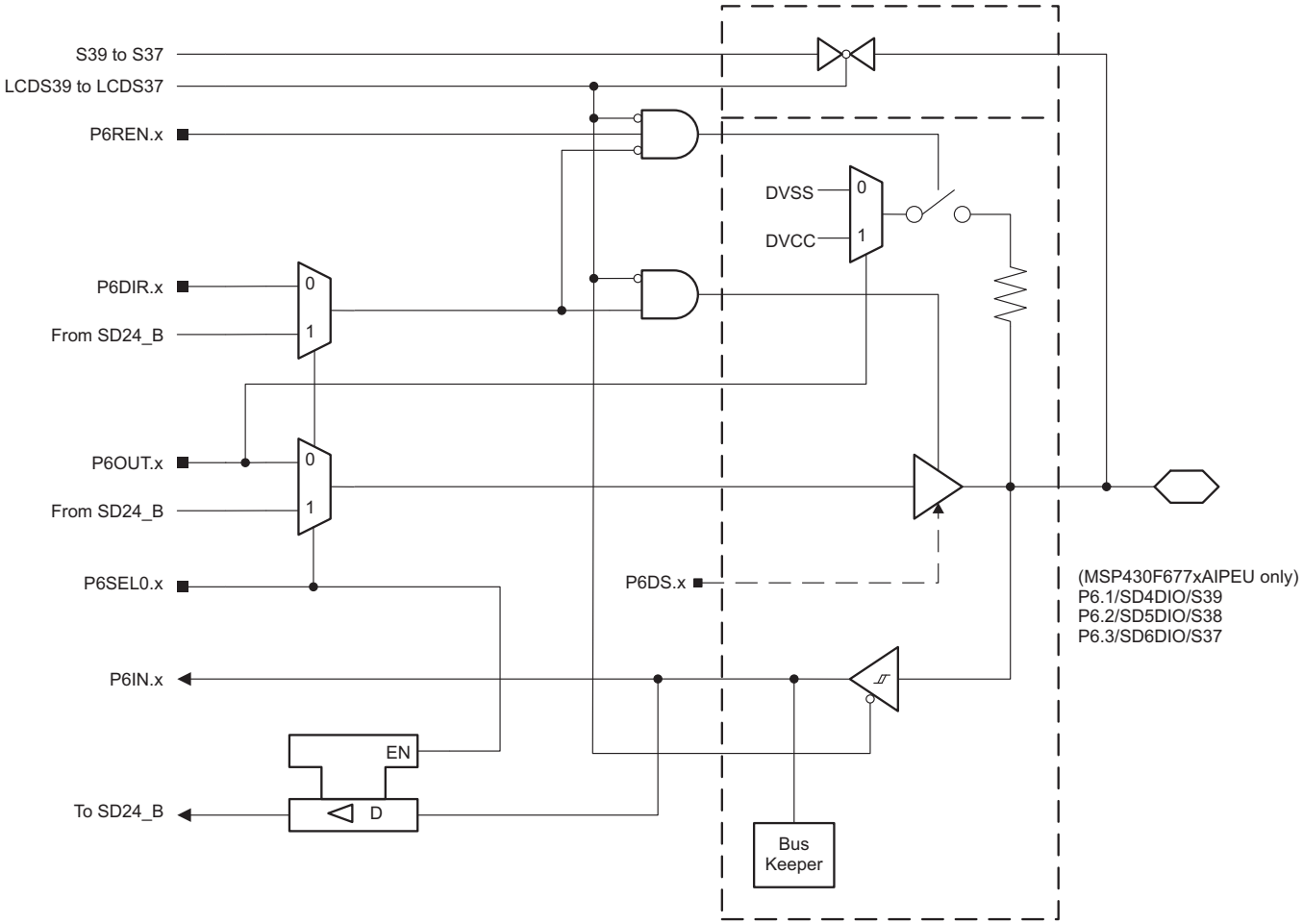

Figure 6-24. Port P6 (P6.1 to P6.3) Diagram (PEU Package Only)

Table 6-82. Port P6 (P6.1 to P6.3) Pin Functions (PEU Package Only)

PIN NAME (P6.x)	x	FUNCTION	CONTROL BITS OR SIGNALS(1)		
			P6DIR.x	P6SEL0.x	LCD39 to LCDS37
P6.1/SD4DIO/S39	1	P6.1 (I/O)	I:0; O:1	0	0
		Secondary digital function	X	1	0
		S39	X	X	1
P6.2/SD5DIO/S38	2	P6.2 (I/O)	I:0; O:1	0	0
		Secondary digital function	X	1	0
		S38	X	X	1
P6.3/SD6DIO/S37	3	P6.3 (I/O)	I:0; O:1	0	0
		Secondary digital function	X	1	0
		S37	X	X	1

(1) X = don't care

Copyright © 2014–2018, Texas Instruments Incorporated

6.12.20 Port P6 (P6.4 to P6.7) Input/Output With Schmitt Trigger (PEU Package Only)

Figure 6-25 shows the port diagram. Table 6-83 summarizes the selection of the pin functions.

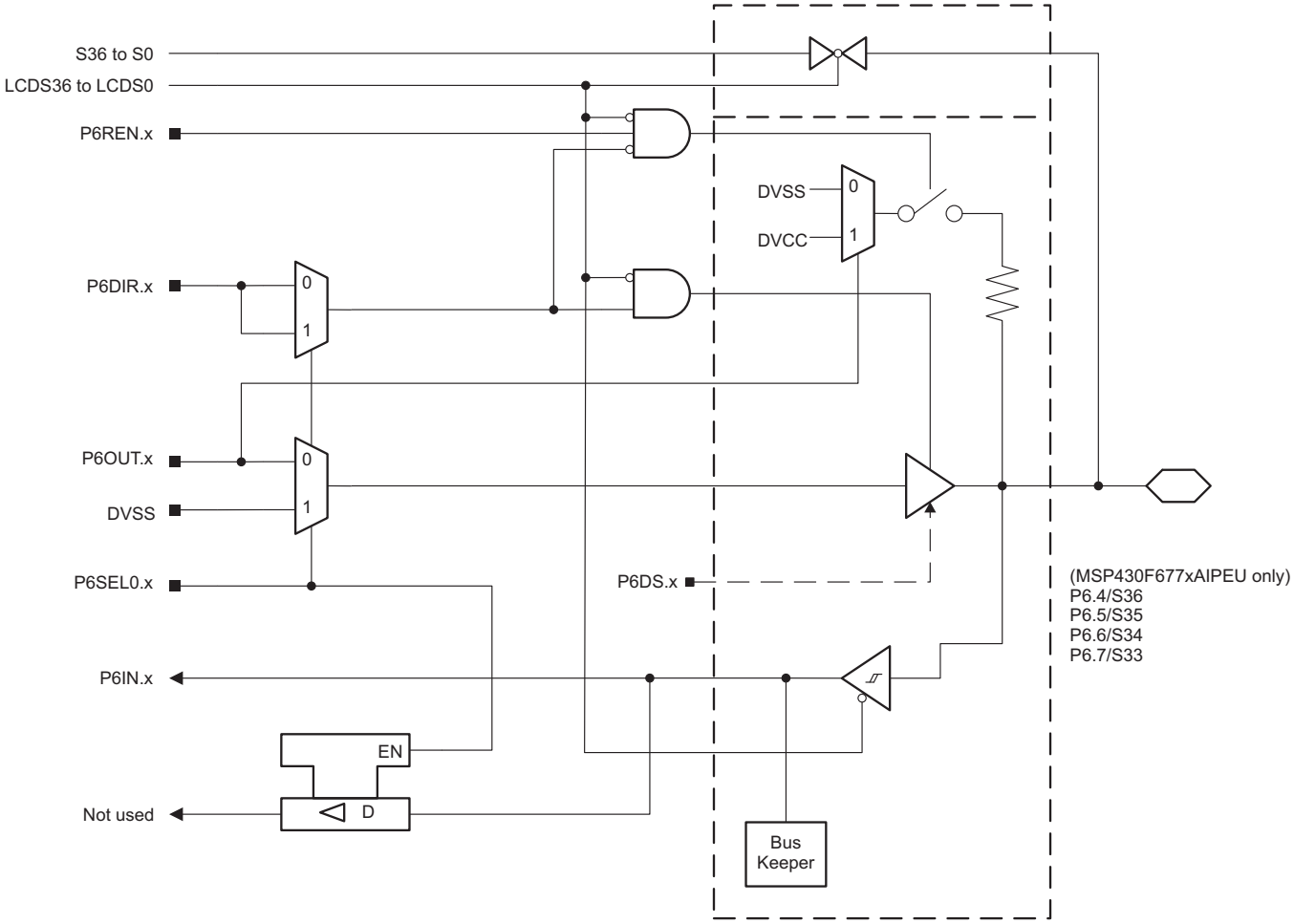

Figure 6-25. Port P6 (P6.4 to P6.7) Diagram (PEU Package Only)

Table 6-83. Port P6 (P6.4 to P6.7) Pin Functions (PEU Package Only)

PIN NAME (P6.x)	x	FUNCTION	CONTROL BITS OR SIGNALS[1]		
			P6DIR.x	P6SEL0.x	LCDS36 to LCDS33
P6.4/S36	4	P6.4 (I/O)	I:0; O:1	0	0
		N/A	0	1	0
		DVSS	1	1	0
		S36	X	X	1
P6.5/S35	5	P6.5 (I/O)	I:0; O:1	0	0
		N/A	0	1	0
		DVSS	1	1	0
		S35	X	X	1
P6.6/S34	6	P6.6(I/O)	I:0; O:1	0	0
		N/A	0	1	0
		DVSS	1	1	0
		S34	X	X	1
P6.7/S33	7	P6.7 (I/O)	I:0; O:1	0	0
		N/A	0	1	0
		DVSS	1	1	0
		S33	X	X	1

(1) X = don't care

Copyright © 2014–2018, Texas Instruments Incorporated

6.12.21 Port P6 (P6.0 to P6.7) Input/Output With Schmitt Trigger (PZ Package Only)

Figure 6-26 shows the port diagram. Table 6-84 summarizes the selection of the pin functions.

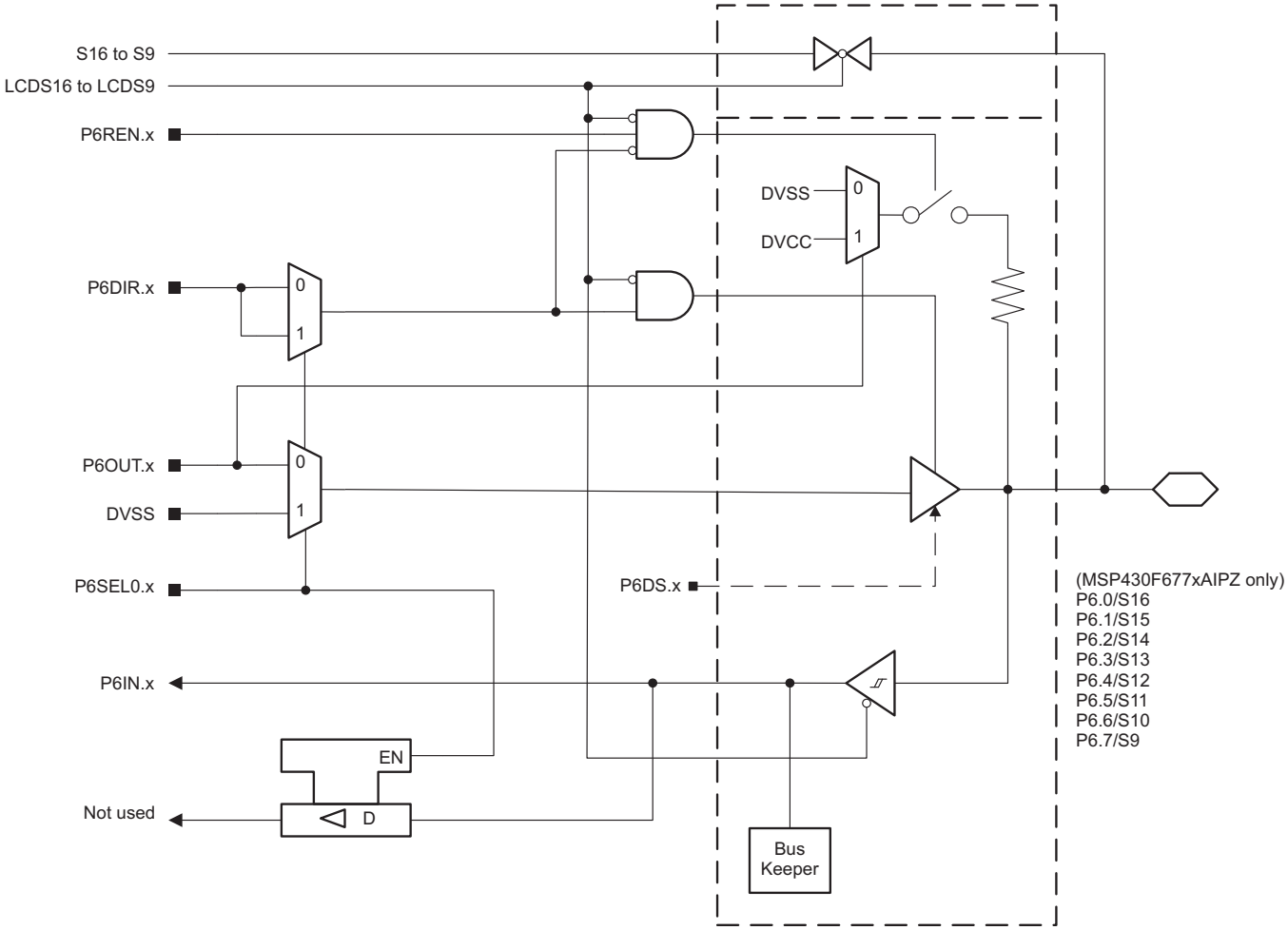

Figure 6-26. Port P6 (P6.0 to P6.7) Diagram (PZ Package Only)

Table 6-84. Port P6 (P6.0 to P6.7) Pin Functions (PZ Package Only)

PIN NAME (P6.x)	x	FUNCTION	CONTROL BITS OR SIGNALS[1]		
			P6DIR.x	P6SEL0.x	LCDS16 to LCDS9
P6.0/S16	0	P6.0 (I/O)	I:0; O:1	0	0
		N/A	0	1	0
		DVSS	1	1	0
		S16	X	X	1
P6.1/S15	1	P6.1 (I/O)	I:0; O:1	0	0
		N/A	0	1	0
		DVSS	1	1	0
		S15	X	X	1
P6.2/S14	2	P6.2 (I/O)	I:0; O:1	0	0
		N/A	0	1	0
		DVSS	1	1	0
		S14	X	X	1
P6.3/S13	3	P6.3 (I/O)	I:0; O:1	0	0
		N/A	0	1	0
		DVSS	1	1	0
		S13	X	X	1
P6.4/S12	4	P6.4 (I/O)	I:0; O:1	0	0
		N/A	0	1	0
		DVSS	1	1	0
		S12	X	X	1
P6.5/S11	5	P6.5 (I/O)	I:0; O:1	0	0
		N/A	0	1	0
		DVSS	1	1	0
		S11	X	X	1
P6.6/S10	6	P6.6 (I/O)	I:0; O:1	0	0
		N/A	0	1	0
		DVSS	1	1	0
		S10	X	X	1
P6.7/S9	7	P6.7 (I/O)	I:0; O:1	0	0
		N/A	0	1	0
		DVSS	1	1	0
		S9	X	X	1

(1) X = don't care

Copyright © 2014–2018, Texas Instruments Incorporated

6.12.22 Port P7 (P7.0 to P7.7) Input/Output With Schmitt Trigger (PEU Package Only)

Figure 6-27 shows the port diagram. Table 6-85 summarizes the selection of the pin functions.

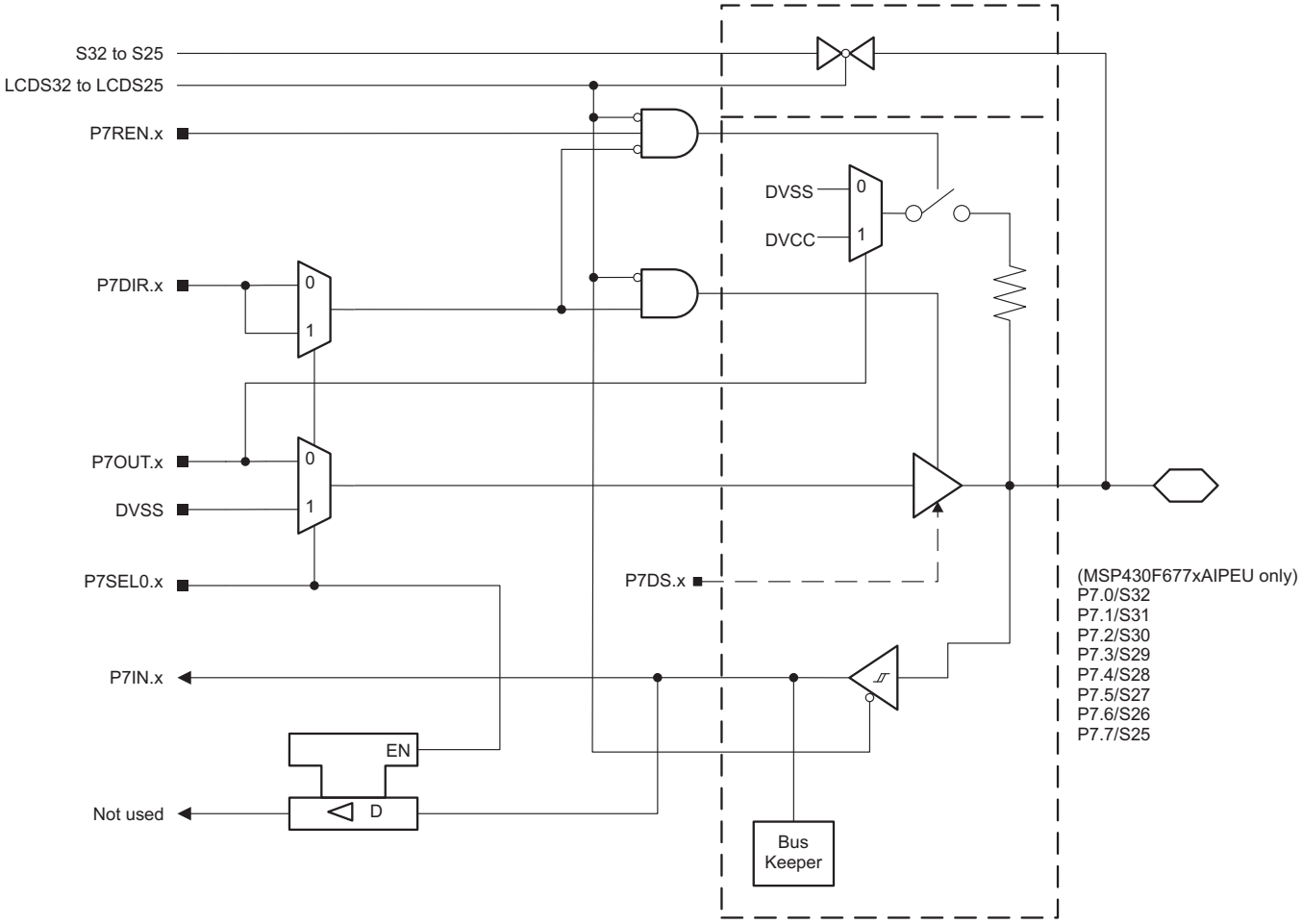

Figure 6-27. Port P7 (P7.0 to P7.7) Diagram (PEU Package Only)

Table 6-85. Port P7 (P7.0 to P7.7) Pin Functions (PEU Package Only)

PIN NAME (P7.x)	x	FUNCTION	CONTROL BITS OR SIGNALS[1]		
			P7DIR.x	P7SEL0.x	LCDS32 to LCDS25
P7.0/S32	0	P7.0 (I/O)	I:0; O:1	0	0
		N/A	0	1	0
		DVSS	1	1	0
		S32	X	X	1
P7.1/S31	1	P7.1 (I/O)	I:0; O:1	0	0
		N/A	0	1	0
		DVSS	1	1	0
		S31	X	X	1
P7.2/S30	2	P7.2 (I/O)	I:0; O:1	0	0
		N/A	0	1	0
		DVSS	1	1	0
		S30	X	X	1
P7.3/S29	3	P7.3 (I/O)	I:0; O:1	0	0
		N/A	0	1	0
		DVSS	1	1	0
		S29	X	X	1
P7.4/S28	4	P7.4 (I/O)	I:0; O:1	0	0
		N/A	0	1	0
		DVSS	1	1	0
		S28	X	X	1
P7.5/S27	5	P7.5 (I/O)	I:0; O:1	0	0
		N/A	0	1	0
		DVSS	1	1	0
		S27	X	X	1
P7.6/S26	6	P7.6 (I/O)	I:0; O:1	0	0
		N/A	0	1	0
		DVSS	1	1	0
		S26	X	X	1
P7.7/S25	7	P7.7 (I/O)	I:0; O:1	0	0
		N/A	0	1	0
		DVSS	1	1	0
		S25	X	X	1

(1) X = don't care

Copyright © 2014–2018, Texas Instruments Incorporated

6.12.23 Port P7 (P7.0 to P7.7) Input/Output With Schmitt Trigger (PZ Package Only)

Figure 6-28 shows the port diagram. Table 6-86 summarizes the selection of the pin functions.

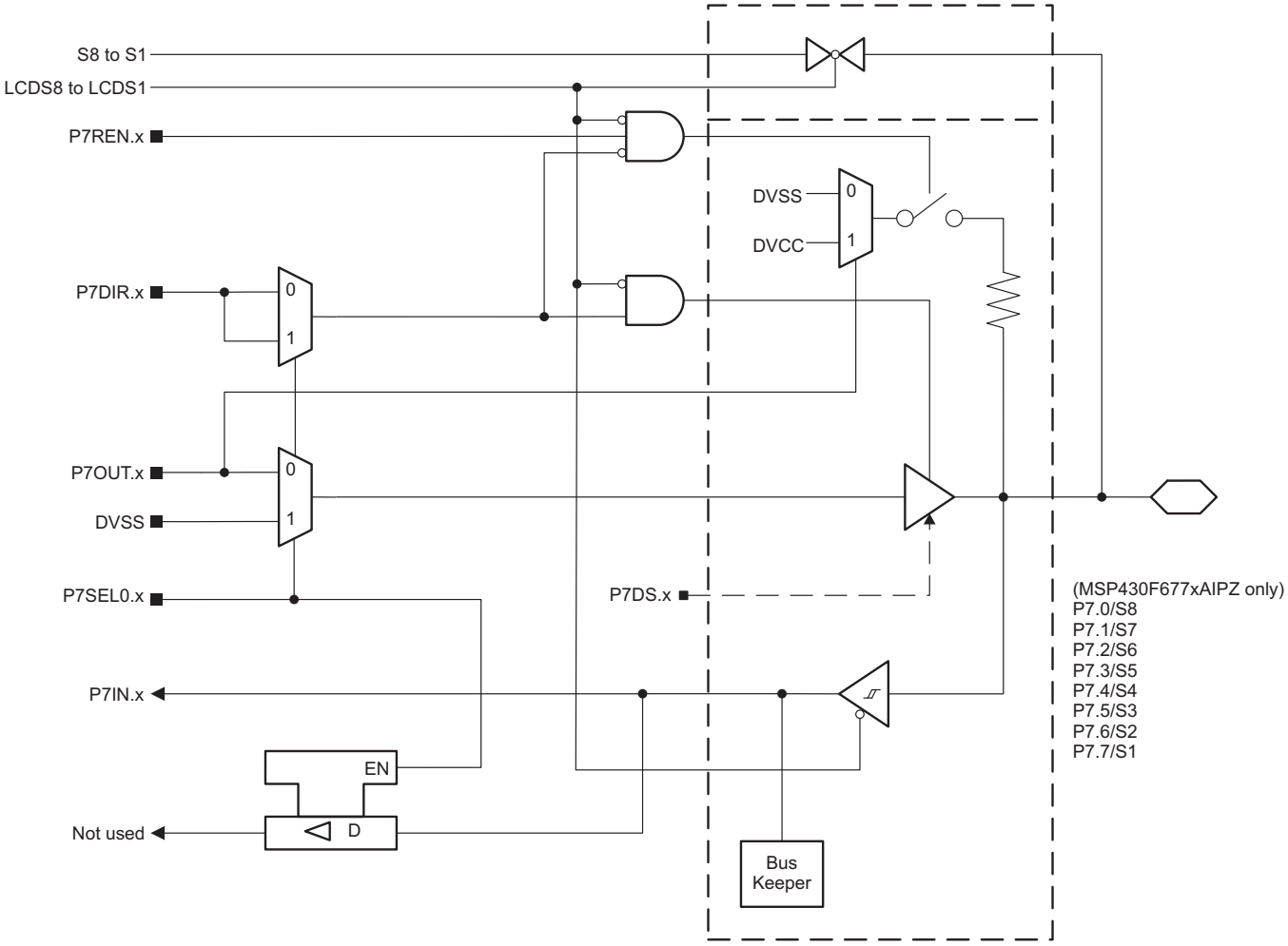

Figure 6-28. Port P7 (P7.0 to P7.7) Diagram (PZ Package Only)

Table 6-86. Port P7 (P7.0 to P7.7) Pin Functions (PZ Package Only)

PIN NAME (P7.x)	x	FUNCTION	CONTROL BITS OR SIGNALS[1]		
			P7DIR.x	P7SEL0.x	LCDS8 to LCDS1
P7.0/S8	0	P7.0 (I/O)	I:0; O:1	0	0
		N/A	0	1	0
		DVSS	1	1	0
		S8	X	X	1
P7.1/S7	1	P7.1 (I/O)	I:0; O:1	0	0
		N/A	0	1	0
		DVSS	1	1	0
		S7	X	X	1
P7.2/S6	2	P7.2 (I/O)	I:0; O:1	0	0
		N/A	0	1	0
		DVSS	1	1	0
		S6	X	X	1
P7.3/S5	3	P7.3 (I/O)	I:0; O:1	0	0
		N/A	0	1	0
		DVSS	1	1	0
		S5	X	X	1
P7.4/S4	4	P7.4 (I/O)	I:0; O:1	0	0
		N/A	0	1	0
		DVSS	1	1	0
		S4	X	X	1
P7.5/S3	5	P7.5 (I/O)	I:0; O:1	0	0
		N/A	0	1	0
		DVSS	1	1	0
		S3	X	X	1
P7.6/S2	6	P7.6 (I/O)	I:0; O:1	0	0
		N/A	0	1	0
		DVSS	1	1	0
		S2	X	X	1
P7.7/S1	7	P7.7 (I/O)	I:0; O:1	0	0
		N/A	0	1	0
		DVSS	1	1	0
		S1	X	X	1

(1) X = don't care

Copyright © 2014–2018, Texas Instruments Incorporated

6.12.24 Port P8 (P8.0 to P8.7) Input/Output With Schmitt Trigger (PEU Package Only)

Figure 6-29 shows the port diagram. Table 6-87 summarizes the selection of the pin functions.

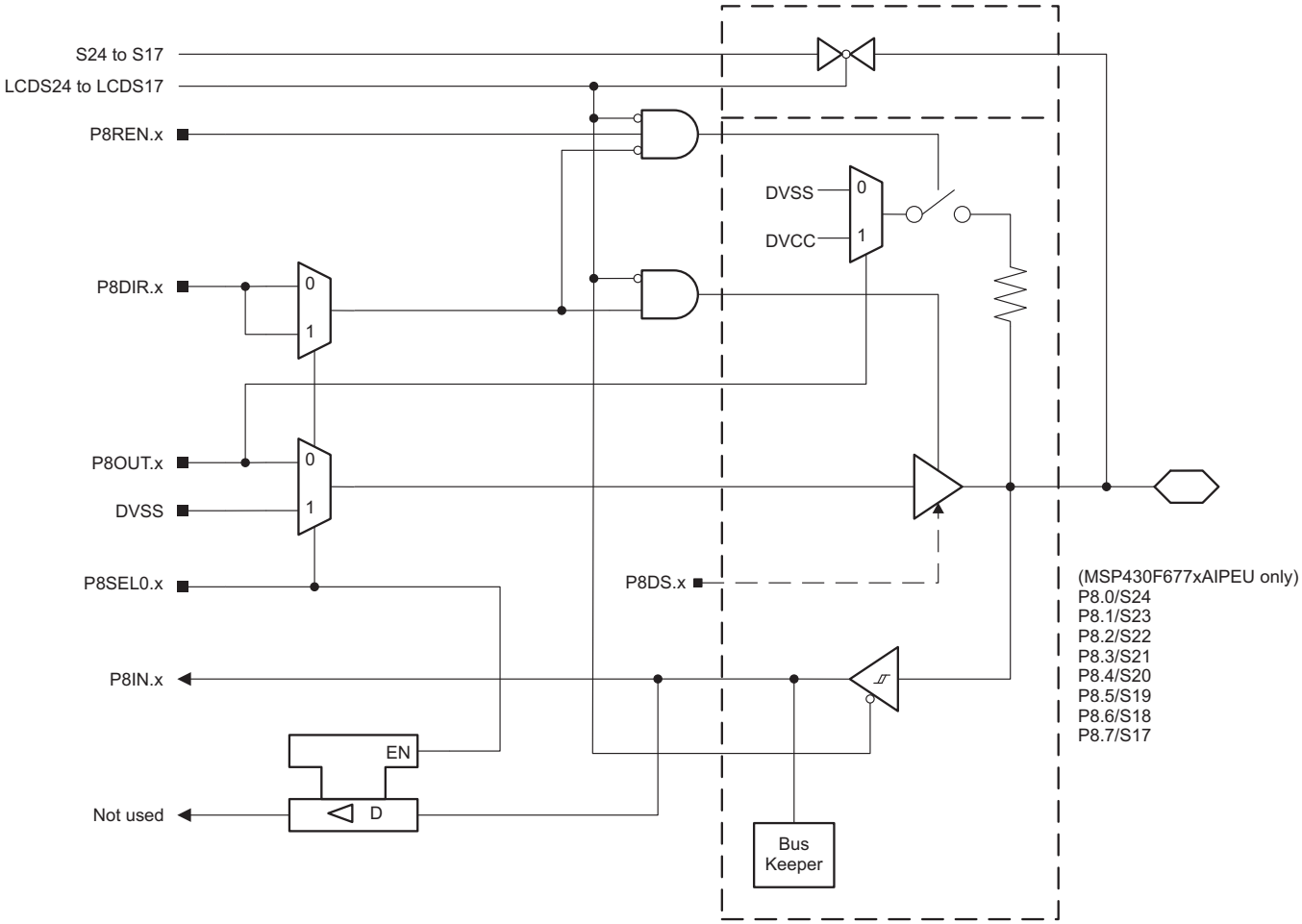

Figure 6-29. Port P8 (P8.0 to P8.7) Diagram (PEU Package Only)

Table 6-87. Port P8 (P8.0 to P8.7) Pin Functions (PEU Package Only)

PIN NAME (P8.x)	x	FUNCTION	CONTROL BITS OR SIGNALS[1]		
			P8DIR.x	P8SEL0.x	LCDS24 to LCDS17
P8.0/S24	0	P8.0 (I/O)	I:0; O:1	0	0
		N/A	0	1	0
		DVSS	1	1	0
		S24	X	X	1
P8.1/S23	1	P8.1 (I/O)	I:0; O:1	0	0
		N/A	0	1	0
		DVSS	1	1	0
		S23	X	X	1
P8.2/S22	2	P8.2 (I/O)	I:0; O:1	0	0
		N/A	0	1	0
		DVSS	1	1	0
		S22	X	X	1
P8.3/S21	3	P8.3 (I/O)	I:0; O:1	0	0
		N/A	0	1	0
		DVSS	1	1	0
		S21	X	X	1
P8.4/S20	4	P8.4 (I/O)	I:0; O:1	0	0
		N/A	0	1	0
		DVSS	1	1	0
		S20	X	X	1
P8.5/S19	5	P8.5 (I/O)	I:0; O:1	0	0
		N/A	0	1	0
		DVSS	1	1	0
		S19	X	X	1
P8.6/S18	6	P8.6 (I/O)	I:0; O:1	0	0
		N/A	0	1	0
		DVSS	1	1	0
		S18	X	X	1
P8.7/S17	7	P8.7 (I/O)	I:0; O:1	0	0
		N/A	0	1	0
		DVSS	1	1	0
		S17	X	X	1

(1) X = don't care

Copyright © 2014–2018, Texas Instruments Incorporated

6.12.25 Port P8 (P8.0) Input/Output With Schmitt Trigger (PZ Package Only)

Figure 6-30 shows the port diagram. Table 6-88 summarizes the selection of the pin functions.

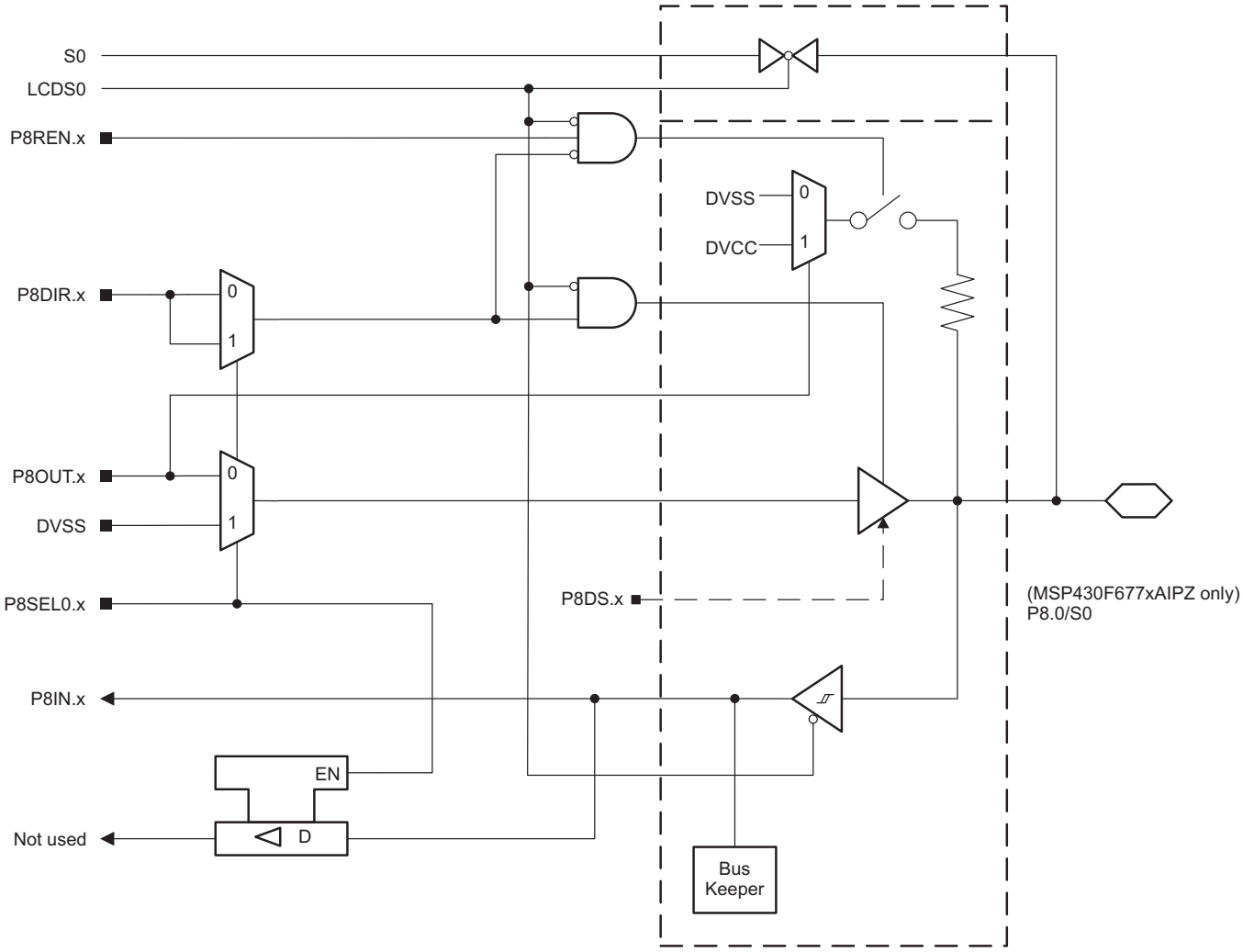

Figure 6-30. Port P8 (P8.0) Diagram (PZ Package Only)

Table 6-88. Port P8 (P8.0) Pin Functions (PZ Package Only)

PIN NAME (P8.x)	x	FUNCTION	CONTROL BITS OR SIGNALS (1)		
			P8DIR.x	P8SEL0.x	LCDS0
P8.0/S0	0	P8.0 (I/O)	I:0; O:1	0	0
		N/A	0	1	0
		DVSS	1	1	0
		S0	X	X	1

(1) X = don't care

6.12.26 Port P8 (P8.1) Input/Output With Schmitt Trigger (PZ Package Only)

Figure 6-31 shows the port diagram. Table 6-89 summarizes the selection of the pin functions.

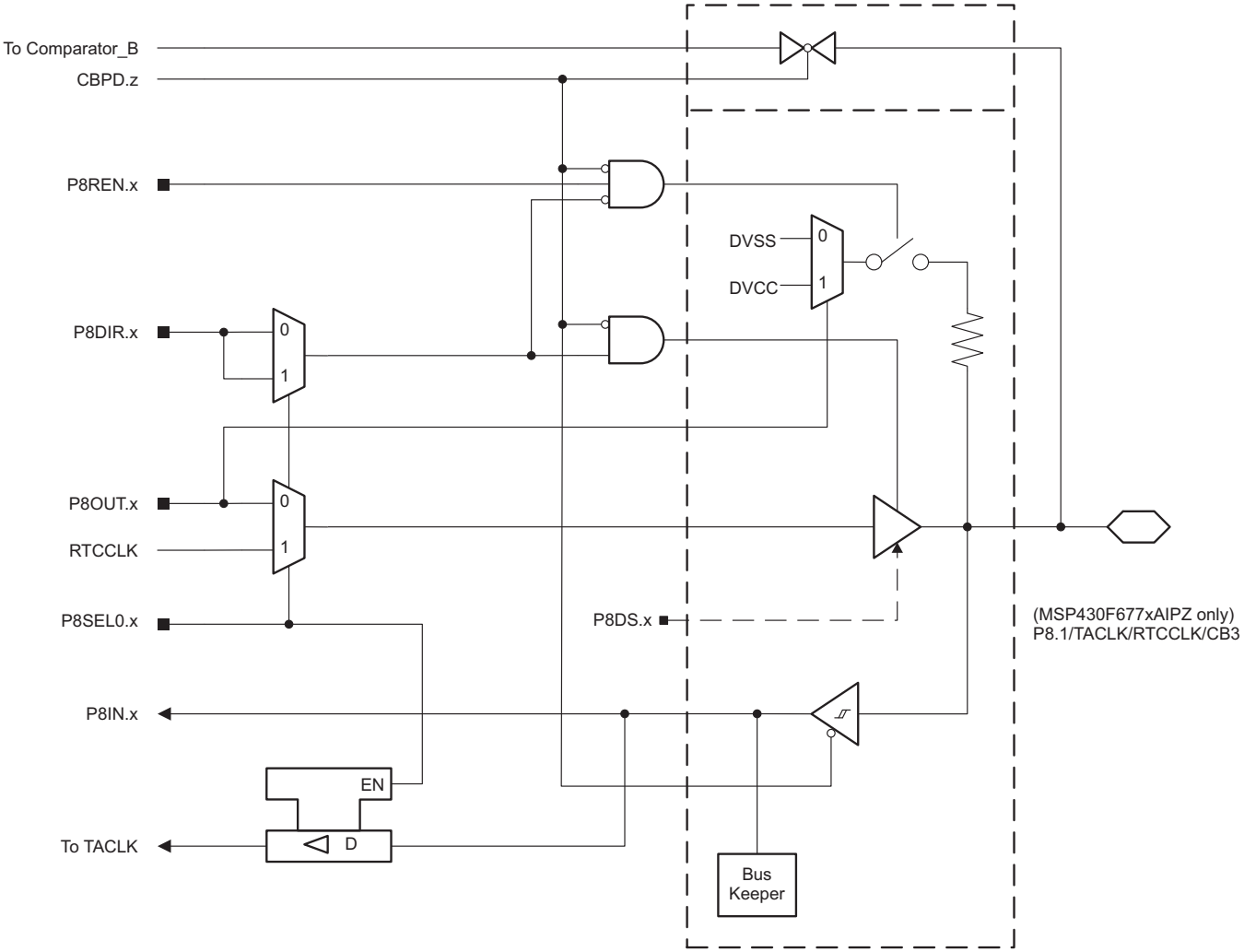

Figure 6-31. Port P8 (P8.1) Diagram (PZ Package Only)

Table 6-89. Port P8 (P8.1) Pin Functions (PZ Package Only)

PIN NAME (P8.x)	x	FUNCTION	CONTROL BITS OR SIGNALS(1)		
			P8DIR.x	P8SEL0.x	CBPD.z
P8.1/TACLK/RTCCLK/CB3	1	P8.1 (I/O)	I:0; O:1	0	0
		TACLK	0	1	0
		RTCCLK	1	1	0
		CB3	X	X	1 (z = 3)

(1) X = don't care

Copyright © 2014–2018, Texas Instruments Incorporated

6.12.27 Port P9 (P9.0 to P9.7) Input/Output With Schmitt Trigger (PEU Package Only)

Figure 6-32 shows the port diagram. Table 6-90 summarizes the selection of the pin functions.

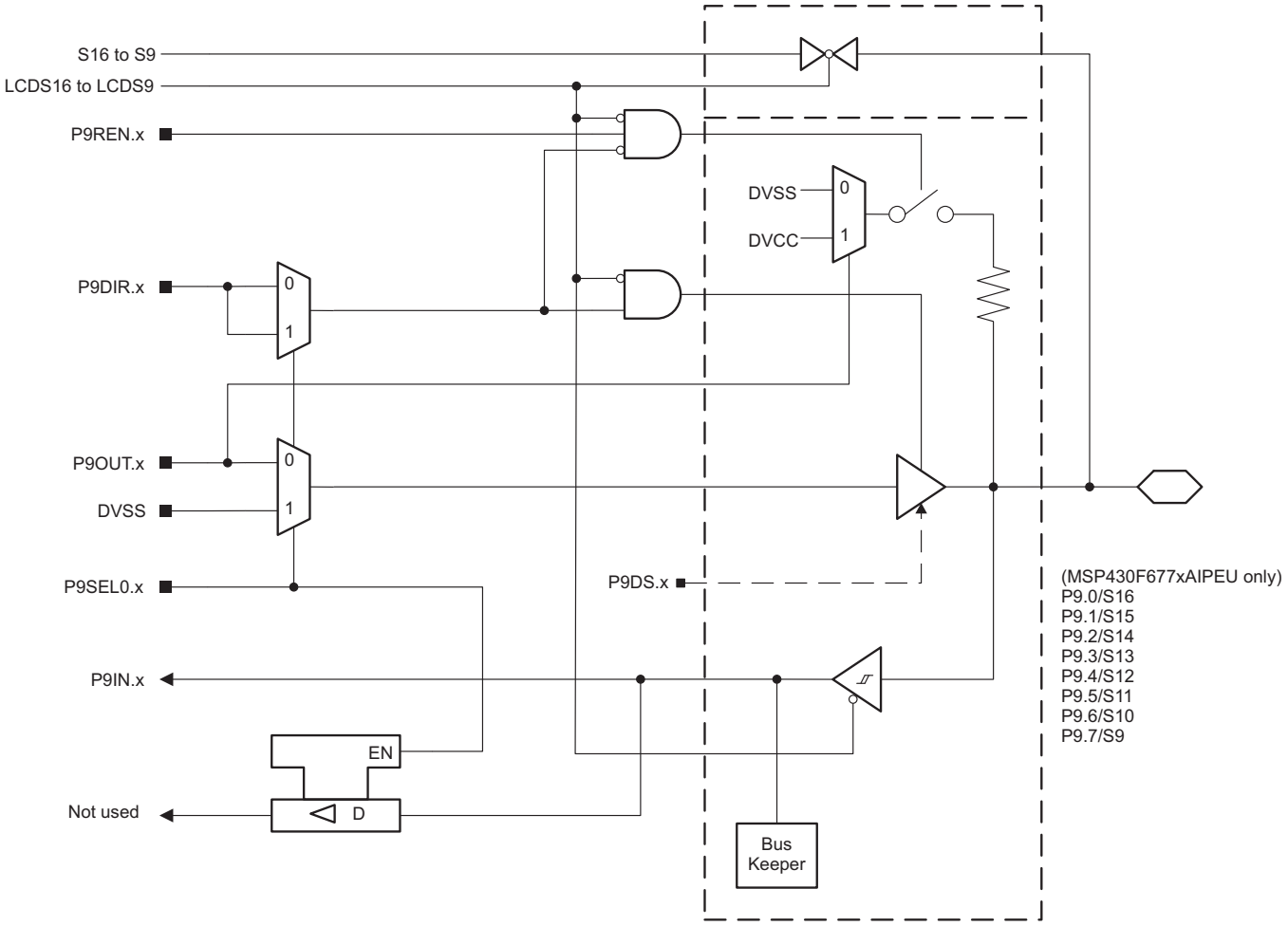

Figure 6-32. Port P9 (P9.0 to P9.7) Diagram (PEU Package Only)

Table 6-90. Port P9 (P9.0 to P9.7) Pin Functions (PEU Package Only)

PIN NAME (P9.x)	x	FUNCTION	CONTROL BITS OR SIGNALS(1)		
			P9DIR.x	P9SEL0.x	LCDS16 to LCDS9
P9.0/S16	0	P9.0 (I/O)	I:0; O:1	0	0
		N/A	0	1	0
		DVSS	1	1	0
		S16	X	X	1
P9.1/S15	1	P9.1 (I/O)	I:0; O:1	0	0
		N/A	0	1	0
		DVSS	1	1	0
		S15	X	X	1
P9.2/S14	2	P9.2 (I/O)	I:0; O:1	0	0
		N/A	0	1	0
		DVSS	1	1	0
		S14	X	X	1
P9.3/S13	3	P9.3 (I/O)	I:0; O:1	0	0
		N/A	0	1	0
		DVSS	1	1	0
		S13	X	X	1
P9.4/S12	4	P9.4 (I/O)	I:0; O:1	0	0
		N/A	0	1	0
		DVSS	1	1	0
		S12	X	X	1
P9.5/S11	5	P9.5 (I/O)	I:0; O:1	0	0
		N/A	0	1	0
		DVSS	1	1	0
		S11	X	X	1
P9.6/S10	6	P9.6 (I/O)	I:0; O:1	0	0
		N/A	0	1	0
		DVSS	1	1	0
		S10	X	X	1
P9.7/S9	7	P9.7 (I/O)	I:0; O:1	0	0
		N/A	0	1	0
		DVSS	1	1	0
		S9	X	X	1

(1) X = don't care

Copyright © 2014–2018, Texas Instruments Incorporated

6.12.28 Port P10 (P10.0 to P10.7) Input/Output With Schmitt Trigger (PEU Package Only)

Figure 6-33 shows the port diagram. Table 6-91 summarizes the selection of the pin functions.

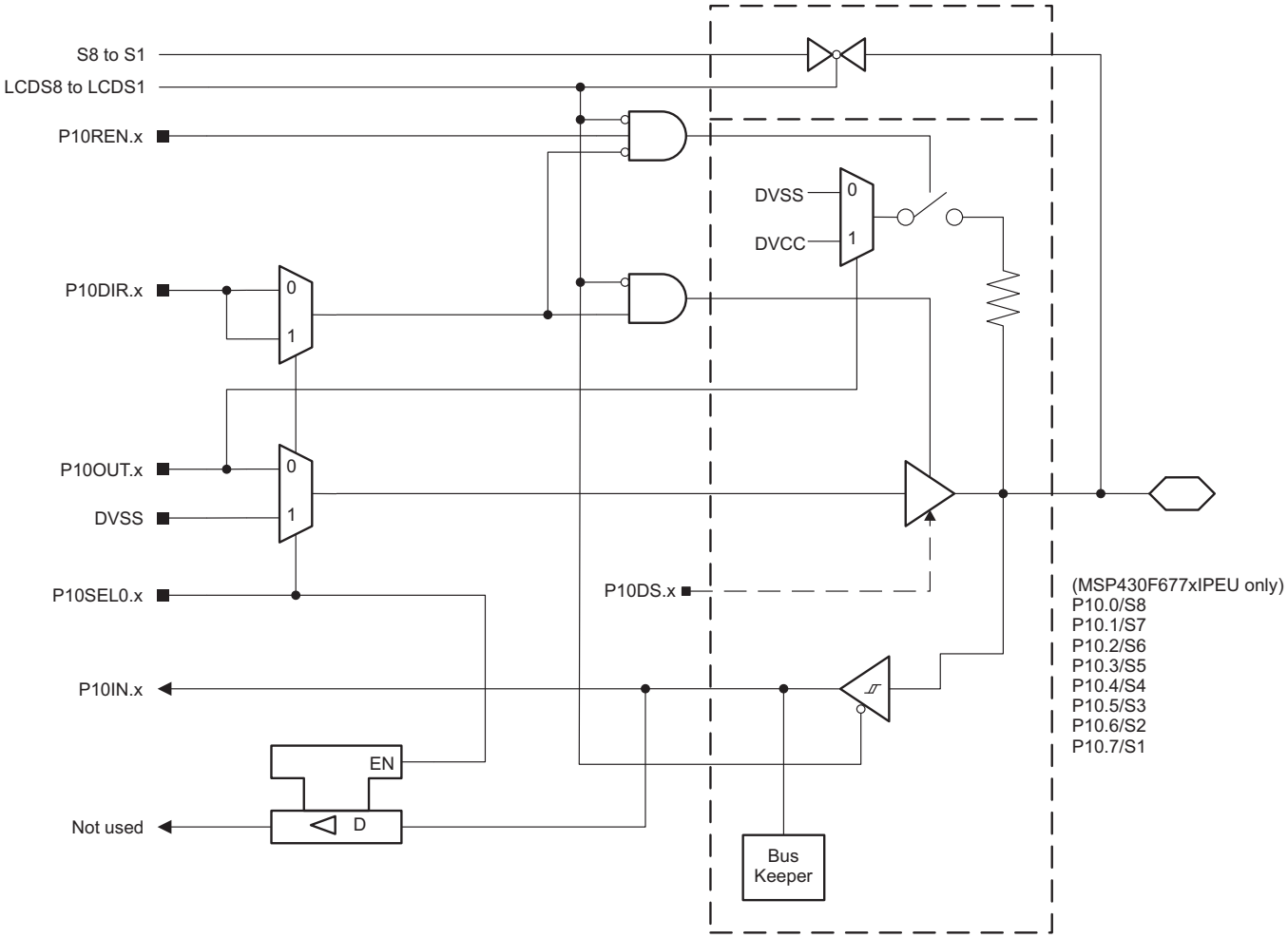

Figure 6-33. Port P10 (P10.0 to P10.7) Diagram (PEU Package Only)

Table 6-91. Port P10 (P10.0 to P10.7) Pin Functions (PEU Package Only)

PIN NAME (P10.x)	x	FUNCTION	CONTROL BITS OR SIGNALS[1]		
			P10DIR.x	P10SEL0.x	LCDS8 to LCDS1
P10.0/S8	0	P10.0 (I/O)	I:0; O:1	0	0
		N/A	0	1	0
		DVSS	1	1	0
		S8	X	X	1
P10.1/S7	1	P10.1 (I/O)	I:0; O:1	0	0
		N/A	0	1	0
		DVSS	1	1	0
		S7	X	X	1
P10.2/S6	2	P10.2 (I/O)	I:0; O:1	0	0
		N/A	0	1	0
		DVSS	1	1	0
		S6	X	X	1
P10.3/S5	3	P10.3 (I/O)	I:0; O:1	0	0
		N/A	0	1	0
		DVSS	1	1	0
		S5	X	X	1
P10.4/S4	4	P10.4 (I/O)	I:0; O:1	0	0
		N/A	0	1	0
		DVSS	1	1	0
		S4	X	X	1
P10.5/S3	5	P10.5 (I/O)	I:0; O:1	0	0
		N/A	0	1	0
		DVSS	1	1	0
		S3	X	X	1
P10.6/S2	6	P10.6 (I/O)	I:0; O:1	0	0
		N/A	0	1	0
		DVSS	1	1	0
		S2	X	X	1
P10.7/S1	7	P10.7 (I/O)	I:0; O:1	0	0
		N/A	0	1	0
		DVSS	1	1	0
		S1	X	X	1

(1) X = don't care

Copyright © 2014–2018, Texas Instruments Incorporated

6.12.29 Port P11 (P11.0) Input/Output With Schmitt Trigger (PEU Package Only)

Figure 6-34 shows the port diagram. Table 6-92 summarizes the selection of the pin functions.

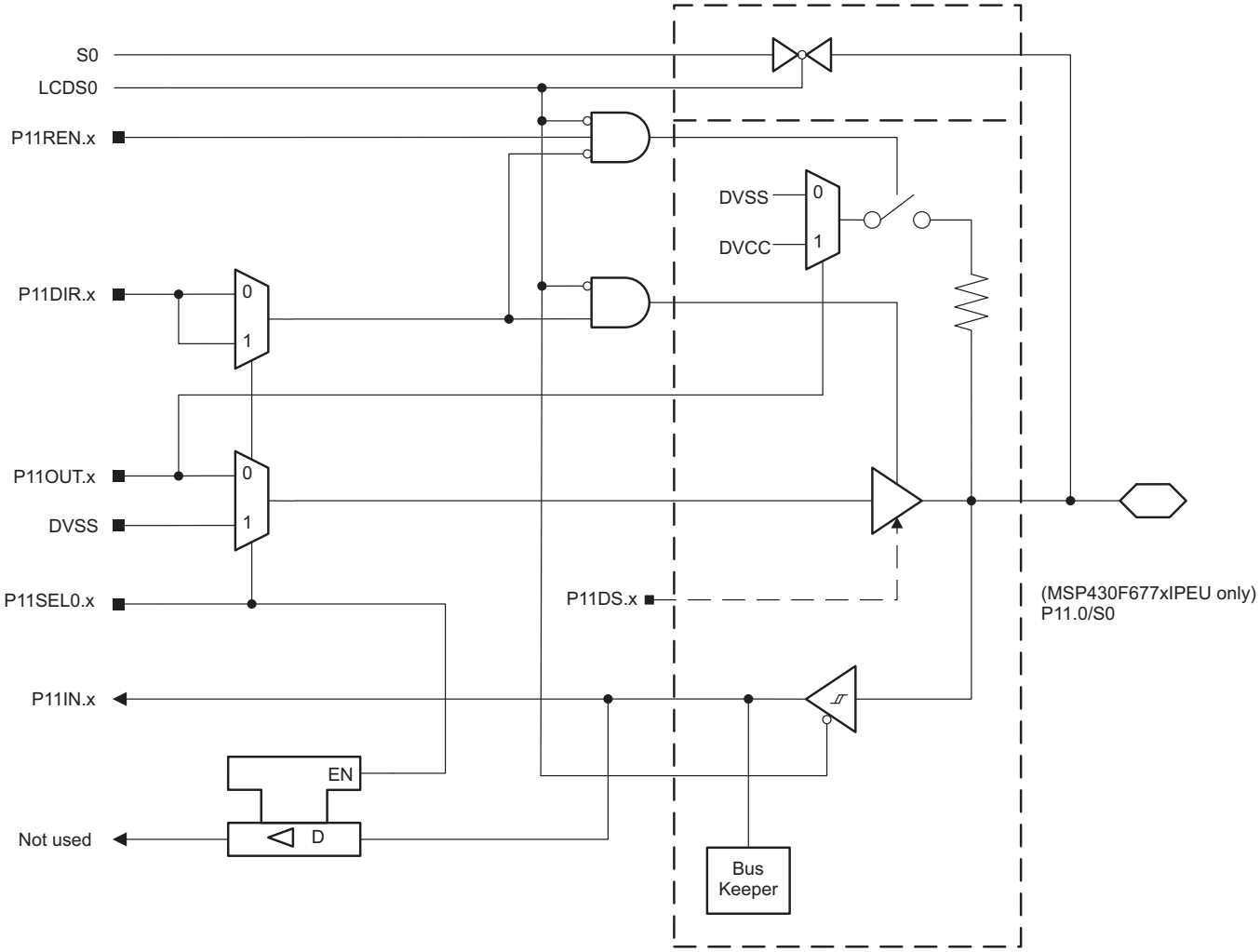

Figure 6-34. Port P11 (P11.0) Diagram (PEU Package Only)

Table 6-92. Port P11 (P11.0) Pin Functions (PEU Package Only)

PIN NAME (P11.x)	x	FUNCTION	CONTROL BITS OR SIGNALS(1)		
			P11DIR.x	P11SEL0.x	LCDS0
P11.0/S0	0	P11.0 (I/O)	I:0; O:1	0	0
		N/A	0	1	0
		DVSS	1	1	0
		S0	X	X	1

(1) X = don't care

6.12.30 Port P11 (P11.1) Input/Output With Schmitt Trigger (PEU Package Only)

Figure 6-35 shows the port diagram. Table 6-93 summarizes the selection of the pin functions.

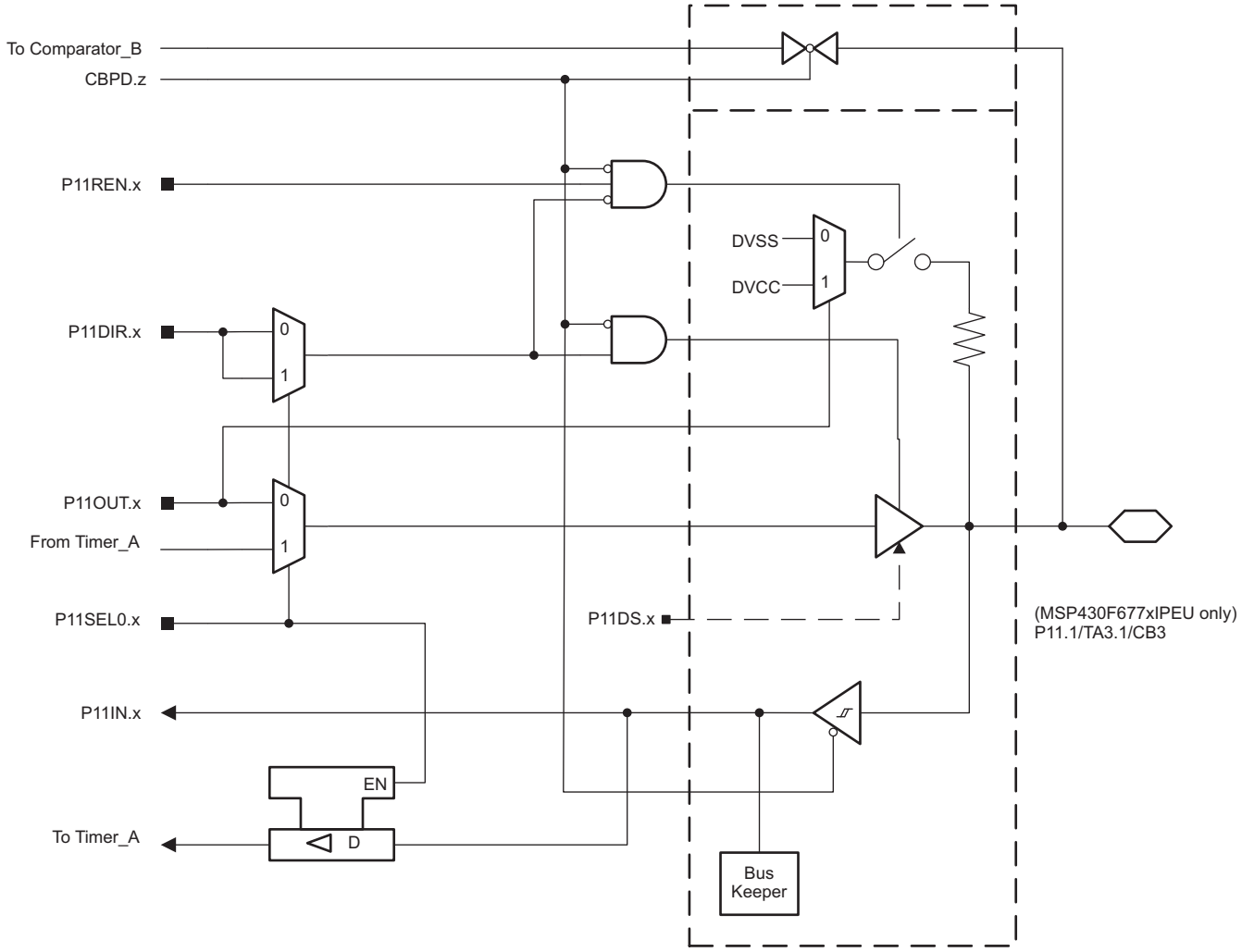

Figure 6-35. Port P11 (P11.1) Diagram (PEU Package Only)

Table 6-93. Port P11 (P11.1) Pin Functions (PEU Package Only)

PIN NAME (P11.x)	x	FUNCTION	CONTROL BITS OR SIGNALS(1)		
			P11DIR.x	P11SEL0.x	CBPD.z
P11.1/TA3.1/CB3	1	P11.1 (I/O)	I:0; O:1	0	0
		TA3.CCI1A	0	1	0
		TA3.1	1	1	0
		CB3	X	X	1

(1) X = don't care

Copyright © 2014–2018, Texas Instruments Incorporated

6.12.31 Port P11 (P11.2 and P11.3) Input/Output With Schmitt Trigger (PEU Package Only)

Figure 6-36 shows the port diagram. Table 6-94 summarizes the selection of the pin functions.

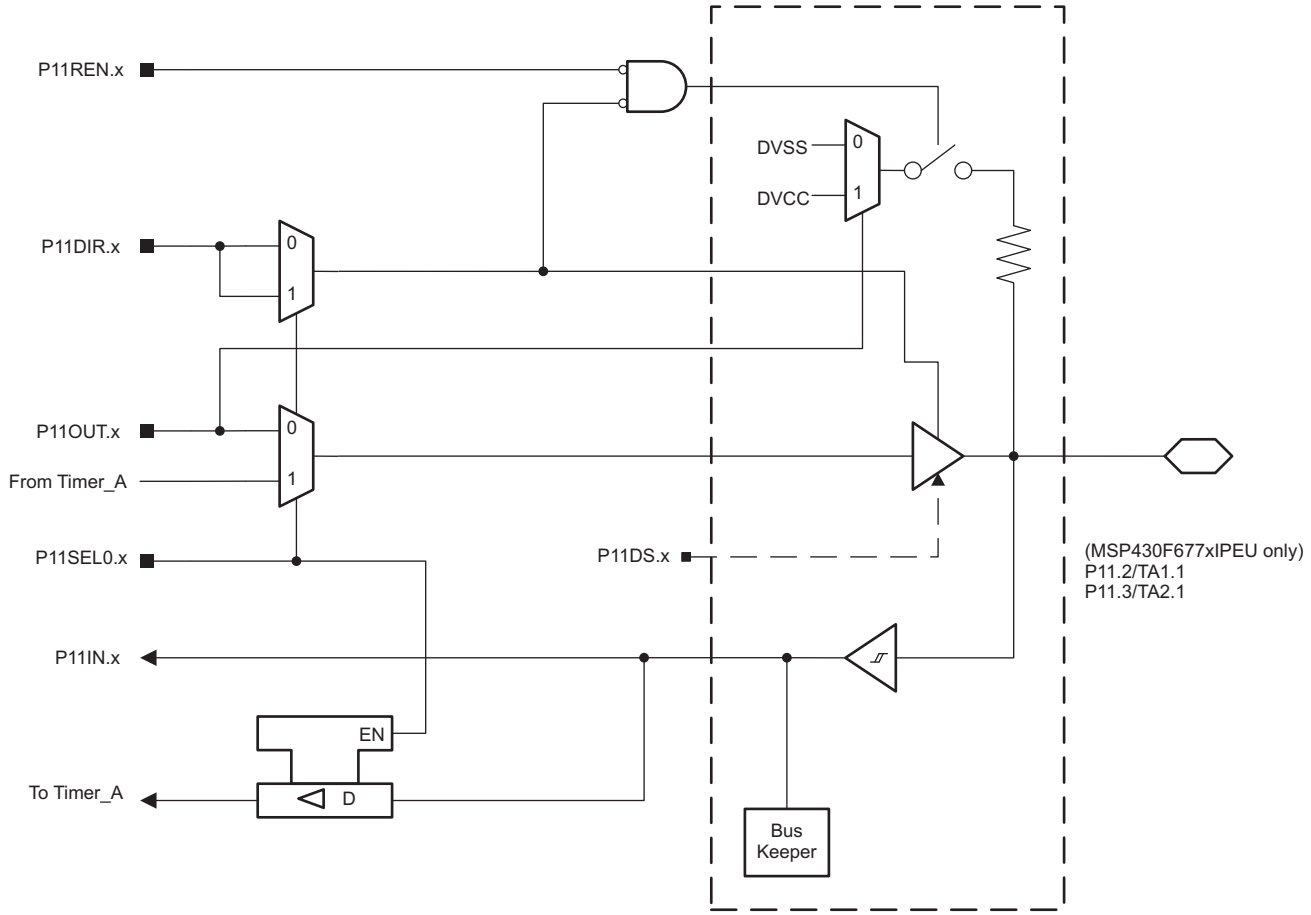

Figure 6-36. Port P11 (P11.2 and P11.3) Diagram (PEU Package Only)

Table 6-94. Port P11 (P11.2 and P11.3) Pin Functions (PEU Package Only)

PIN NAME (P11.x)	x	FUNCTION	CONTROL BITS OR SIGNALS	
			P11DIR.x	P11SEL0.x
P11.2/TA1.1	2	P11.2 (I/O)	I:0; O:1	0
		TA1.CCI1A	0	1
		TA1.1	1	1
P11.3/TA2.1	3	P11.3 (I/O)	I:0; O:1	0
		TA2.CCI1A	0	1
		TA2.1	1	1

6.12.32 Port P11 (P11.4 and P11.5) Input/Output With Schmitt Trigger (PEU Package Only)

Figure 6-37 shows the port diagram. Table 6-95 summarizes the selection of the pin functions.

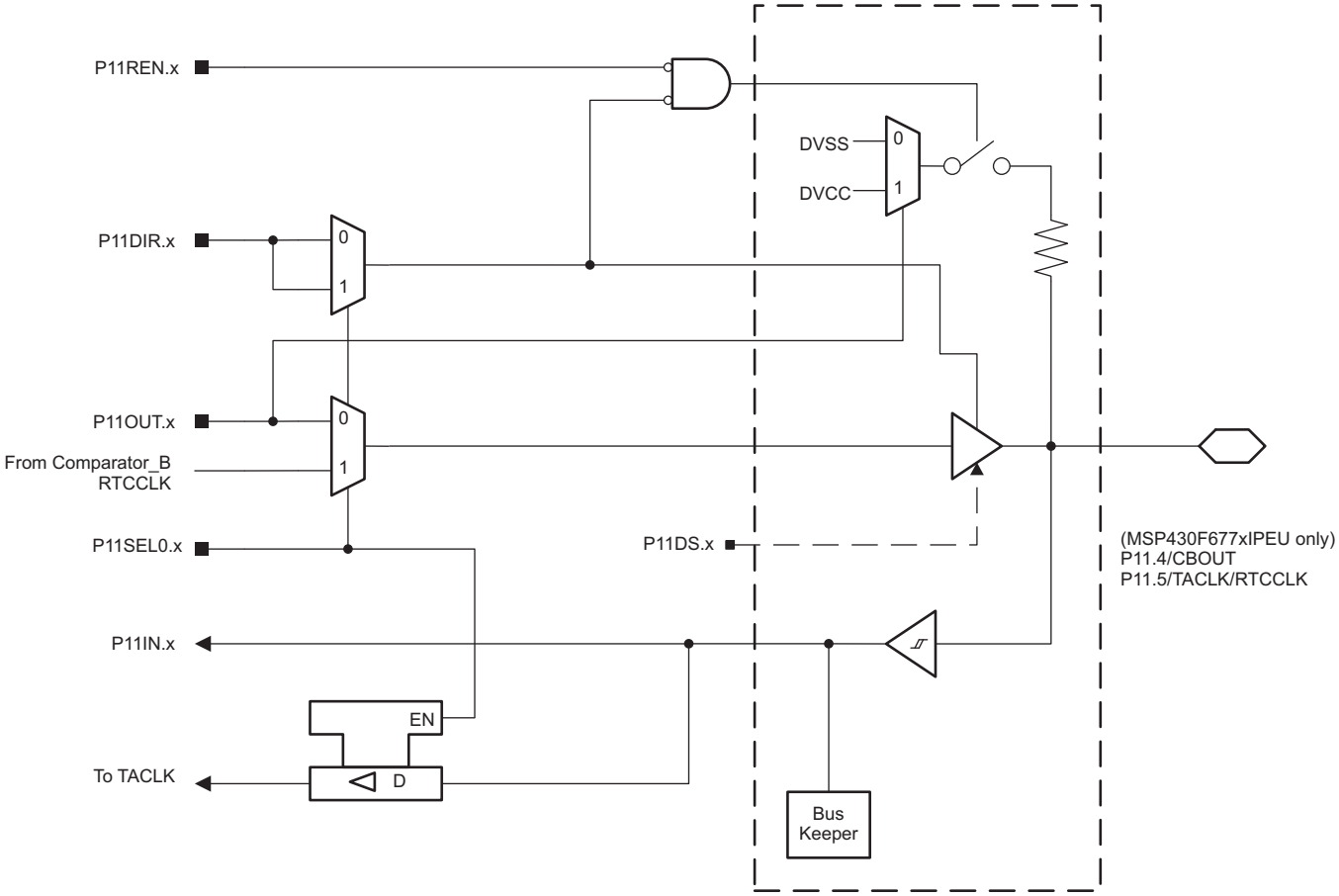

Figure 6-37. Port P11 (P11.4 and P11.5) Diagram (PEU Package Only)

Table 6-95. Port P11 (P11.4 and P11.5) Pin Functions (PEU Package Only)

PIN NAME (P11.x)	x	FUNCTION	CONTROL BITS OR SIGNALS	
			P11DIR.x	P11SEL0.x
P11.4/CBOUT	4	P11.4 (I/O)	I:0; O:1	0
		N/A	0	1
		CBOUT	1	1
P11.5/TACLK/RTCCLK	5	P11.5 (I/O)	I:0; O:1	0
		TACLK	0	1
		RTCCLK	1	1

Copyright © 2014–2018, Texas Instruments Incorporated

6.12.33 Port PJ (PJ.0) JTAG Pin TDO, Input/Output With Schmitt Trigger or Output

Figure 6-38 shows the port diagram. Table 6-96 summarizes the selection of the pin functions.

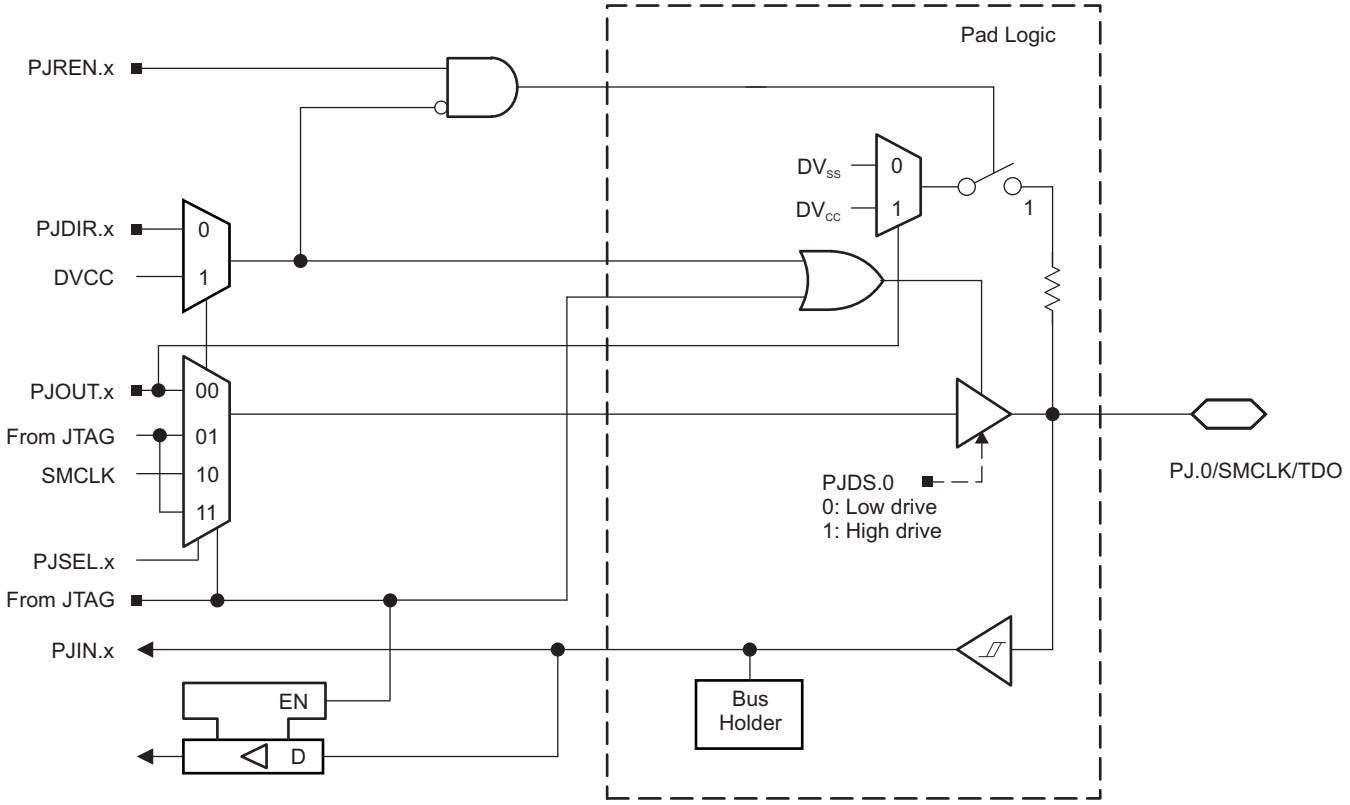

Figure 6-38. Port PJ (PJ.0) Diagram

6.12.34 Port PJ (PJ.0 to PJ.3) JTAG Pins TMS, TCK, TDI/TCLK, Input/Output With Schmitt Trigger or Output

Figure 6-39 shows the port diagram. Table 6-96 summarizes the selection of the pin functions.

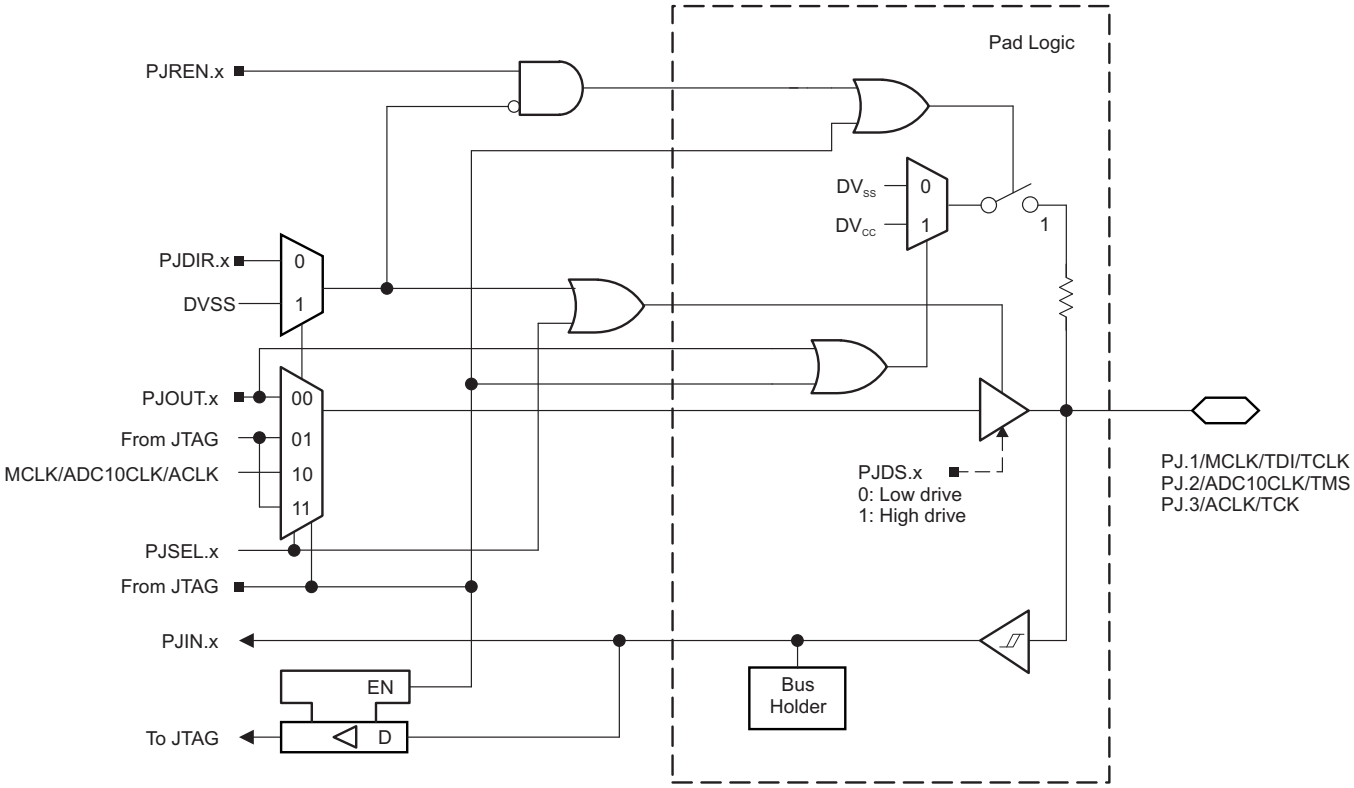

Figure 6-39. Port PJ (PJ.1 to PJ.3) Diagram

Copyright © 2014–2018, Texas Instruments Incorporated

Table 6-96. Port PJ (PJ.0 to PJ.3) Pin Functions

PIN NAME (PJ.x)	x	FUNCTION	CONTROL BITS OR SIGNALS[1]		
			PJDIR.x	PJSEL.x	JTAG MODE
PJ.0/SMCLK/TDO	0	PJ.0 (I/O)[2]	I: 0; O: 1	0	0
		SMCLK	1	1	0
		TDO[3]	x	x	1
PJ.1/MCLK/TDI/TCLK	1	PJ.1 (I/O)[2]	I: 0; O: 1	0	0
		MCLK	1	1	0
		TDI/TCLK[3] [4]	x	x	1
PJ.2/ADC10CLK/TMS	2	PJ.2 (I/O)[2]	I: 0; O: 1	0	0
		ADC10CLK	1	1	0
		TMS[3] [4]	x	x	1
PJ.3/ACLK/TCK	3	PJ.3 (I/O)[2]	I: 0; O: 1	0	0
		ACLK	1	1	0
		TCK[3] [4]	x	x	1

(1) X = don't care
(2) Default condition
(3) The pin direction is controlled by the JTAG module.
(4) In JTAG mode, pullups are activated automatically on TMS, TCK, and TDI/TCLK. PJREN.x are don't care.

6.13 Device Descriptors (TLV)

Table 6-97 through Table 6-99 list the contents of the device descriptor tag-length-value (TLV) structure for each device type.

Table 6-97. F677x1A Device Descriptor

DESCRIPTION		ADDRESS	SIZE (bytes)	VALUE				
				F67791A	F67781A	F67771A	F67761A	F67751A
Info Block	Info length	1A00h	1	06h	06h	06h	06h	06h
	CRC length	1A01h	1	06h	06h	06h	06h	06h
	CRC value	1A02h	2	Per unit	Per unit	Per unit	Per unit	Per unit
	Device ID	1A04h	2	8233h	8232h	8231h	8230h	822Fh
	Hardware revision	1A06h	1	Per unit	Per unit	Per unit	Per unit	Per unit
	Firmware revision	1A07h	1	Per unit	Per unit	Per unit	Per unit	Per unit
Die Record	Die record tag	1A08h	1	08h	08h	08h	08h	08h
	Die record length	1A09h	1	0Ah	0Ah	0Ah	0Ah	0Ah
	Lot ID	1A0Ah	4	Per unit	Per unit	Per unit	Per unit	Per unit
	X position	1A0Eh	2	Per unit	Per unit	Per unit	Per unit	Per unit
	Y position	1A10h	2	Per unit	Per unit	Per unit	Per unit	Per unit
	Test record CP	1A12h	1	Per unit	Per unit	Per unit	Per unit	Per unit
	Test record FT	1A13h	1	Per unit	Per unit	Per unit	Per unit	Per unit
ADC10 Calibration	ADC calibration tag	1A14h	1	13h	13h	13h	13h	13h
	ADC calibration length	1A15h	1	10h	10h	10h	10h	10h
	ADC gain factor	1A16h	2	Per unit	Per unit	Per unit	Per unit	Per unit
	ADC offset	1A18h	2	Per unit	Per unit	Per unit	Per unit	Per unit
	ADC 15T30	1A1Ah	2	Per unit	Per unit	Per unit	Per unit	Per unit
	ADC 15T85	1A1Ch	2	Per unit	Per unit	Per unit	Per unit	Per unit
	ADC 20T30	1A1Eh	2	Per unit	Per unit	Per unit	Per unit	Per unit
	ADC 20T85	1A20h	2	Per unit	Per unit	Per unit	Per unit	Per unit
	ADC 25T30	1A22h	2	Per unit	Per unit	Per unit	Per unit	Per unit
	ADC 25T85	1A24h	2	Per unit	Per unit	Per unit	Per unit	Per unit

Copyright © 2014–2018, Texas Instruments Incorporated

Table 6-98. F676x1A Device Descriptor

DESCRIPTION		ADDRESS	SIZE (bytes)	VALUE				
				F67691A	F67681A	F67671A	F67661A	F67651A
Info Block	Info length	1A00h	1	06h	06h	06h	06h	06h
	CRC length	1A01h	1	06h	06h	06h	06h	06h
	CRC value	1A02h	2	Per unit	Per unit	Per unit	Per unit	Per unit
	Device ID	1A04h	2	822Eh	822Dh	822Ch	822Bh	822Ah
	Hardware revision	1A06h	1	Per unit	Per unit	Per unit	Per unit	Per unit
	Firmware revision	1A07h	1	Per unit	Per unit	Per unit	Per unit	Per unit
Die Record	Die record tag	1A08h	1	08h	08h	08h	08h	08h
	Die record length	1A09h	1	0Ah	0Ah	0Ah	0Ah	0Ah
	Lot ID	1A0Ah	4	Per unit	Per unit	Per unit	Per unit	Per unit
	X position	1A0Eh	2	Per unit	Per unit	Per unit	Per unit	Per unit
	Y position	1A10h	2	Per unit	Per unit	Per unit	Per unit	Per unit
	Test record CP	1A12h	1	Per unit	Per unit	Per unit	Per unit	Per unit
	Test record FT	1A13h	1	Per unit	Per unit	Per unit	Per unit	Per unit
ADC10 Calibration	ADC calibration tag	1A14h	1	13h	13h	13h	13h	13h
	ADC calibration length	1A15h	1	10h	10h	10h	10h	10h
	ADC gain factor	1A16h	2	Per unit	Per unit	Per unit	Per unit	Per unit
	ADC offset	1A18h	2	Per unit	Per unit	Per unit	Per unit	Per unit
	ADC 15T30	1A1Ah	2	Per unit	Per unit	Per unit	Per unit	Per unit
	ADC 15T85	1A1Ch	2	Per unit	Per unit	Per unit	Per unit	Per unit
	ADC 20T30	1A1Eh	2	Per unit	Per unit	Per unit	Per unit	Per unit
	ADC 20T85	1A20h	2	Per unit	Per unit	Per unit	Per unit	Per unit
	ADC 25T30	1A22h	2	Per unit	Per unit	Per unit	Per unit	Per unit
	ADC 25T85	1A24h	2	Per unit	Per unit	Per unit	Per unit	Per unit

Copyright © 2014–2018, Texas Instruments Incorporated

Table 6-99. F674x1A Device Descriptor

DESCRIPTION		ADDRESS	SIZE (bytes)	VALUE				
				F67491A	F67481A	F67471A	F67461A	F67451A
Info Block	Info length	1A00h	1	06h	06h	06h	06h	06h
	CRC length	1A01h	1	06h	06h	06h	06h	06h
	CRC value	1A02h	2	Per unit	Per unit	Per unit	Per unit	Per unit
	Device ID	1A04h	2	8229h	8228h	8227h	8226h	8225h
	Hardware revision	1A06h	1	Per unit	Per unit	Per unit	Per unit	Per unit
	Firmware revision	1A07h	1	Per unit	Per unit	Per unit	Per unit	Per unit
Die Record	Die record tag	1A08h	1	08h	08h	08h	08h	08h
	Die record length	1A09h	1	0Ah	0Ah	0Ah	0Ah	0Ah
	Lot ID	1A0Ah	4	Per unit	Per unit	Per unit	Per unit	Per unit
	X position	1A0Eh	2	Per unit	Per unit	Per unit	Per unit	Per unit
	Y position	1A10h	2	Per unit	Per unit	Per unit	Per unit	Per unit
	Test record CP	1A12h	1	Per unit	Per unit	Per unit	Per unit	Per unit
	Test record FT	1A13h	1	Per unit	Per unit	Per unit	Per unit	Per unit
ADC10 Calibration	ADC calibration tag	1A14h	1	13h	13h	13h	13h	13h
	ADC calibration length	1A15h	1	10h	10h	10h	10h	10h
	ADC gain factor	1A16h	2	Per unit	Per unit	Per unit	Per unit	Per unit
	ADC offset	1A18h	2	Per unit	Per unit	Per unit	Per unit	Per unit
	ADC 15T30	1A1Ah	2	Per unit	Per unit	Per unit	Per unit	Per unit
	ADC 15T85	1A1Ch	2	Per unit	Per unit	Per unit	Per unit	Per unit
	ADC 20T30	1A1Eh	2	Per unit	Per unit	Per unit	Per unit	Per unit
	ADC 20T85	1A20h	2	Per unit	Per unit	Per unit	Per unit	Per unit
	ADC 25T30	1A22h	2	Per unit	Per unit	Per unit	Per unit	Per unit
	ADC 25T85	1A24h	2	Per unit	Per unit	Per unit	Per unit	Per unit

Copyright © 2014–2018, Texas Instruments Incorporated

6.14 Identification

6.14.1 Revision Identification

The device revision information is shown as part of the top-side marking on the device package. The device-specific errata sheet describes these markings. For links to all of the errata sheets for the devices in this data sheet, see 节 8.4.

The hardware revision is also stored in the Device Descriptor structure in the Info Block section. For details on this value, see the "Hardware Revision" entries in Section 6.13.

6.14.2 Device Identification

The device type can be identified from the top-side marking on the device package. The device-specific errata sheet describes these markings. For links to all of the errata sheets for the devices in this data sheet, see 节 8.4.

A device identification value is also stored in the Device Descriptor structure in the Info Block section. For details on this value, see the "Device ID" entries in Section 6.13.

6.14.3 JTAG Identification

Programming through the JTAG interface, including reading and identifying the JTAG ID, is described in detail in the *MSP430 Programming With the JTAG Interface*.

7 Applications, Implementation, and Layout

NOTE

Information in the following Applications section is not part of the TI component specification, and TI does not warrant its accuracy or completeness. TI's customers are responsible for determining suitability of components for their purposes. Customers should validate and test their design implementation to confirm system functionality.

The following resources provide application guidelines and best practices when designing with the MSP430F677x1A, MSP430F676x1A, and MSP430F674x1A devices.

Implementation of a 3-Phase Electronic Watt-Hour Meter Using the MSP430F677x(A)

This application report describes the implementation of a 3-phase electronic electricity meter using the TI MSP430F677x(A) metering processors. This application report includes the necessary information with regard to metrology software and hardware procedures for this single-chip implementation.

High-Accuracy 3-Phase Electricity Meter With Tamper Detection

The design implements a highly accurate 3-phase electric meter system using the MSP430F6779 smart meter SoC. It exceeds all of the requirements for ANSI C12.20 and IEC-62053 Class 0.2 meters. The F6779 SoC is the most integrated polyphase e-meter SoC with 512KB of flash. This allows developers to create a true single-chip smart e-meter with the highest performance and accuracy. In addition, this EVM has tamper detection capabilities which help the engineer develop methods to prevent theft of electricity from utilities.

Features

- Comprehensive design includes schematics, BOMs, design files, and test reports.
- Three-phase electricity meter which exceeds Class 0.2 accuracy requirements from ANSI and IEC
- TI Energy Library firmware calculates all energy measurement parameters including active and reactive power and energy, RMS current and voltage, power factor, and line frequency.
- Add-on communications modules for wireless communications standards such as ZigBee®, Wi-Fi®, Wireless M-Bus, and IEEE Std 802.15.4g, both 2.4 GHz and sub-1 GHz
- Built-in 160-segment display powered from 3-phase line voltage

版权 © 2014–2018, Texas Instruments Incorporated

8 器件和文档支持

8.1 入门和后续步骤

有关 MSP430™系列器件以及开发协助工具和库的更多信息，请访问入门页面。

8.2 Device Nomenclature

To designate the stages in the product development cycle, TI assigns prefixes to the part numbers of all MSP MCU devices. Each MSP MCU commercial family member has one of two prefixes: MSP or XMS. These prefixes represent evolutionary stages of product development from engineering prototypes (XMS) through fully qualified production devices (MSP).

XMS – Experimental device that is not necessarily representative of the final device's electrical specifications

MSP – Fully qualified production device

XMS devices are shipped against the following disclaimer:

"Developmental product is intended for internal evaluation purposes."

MSP devices have been characterized fully, and the quality and reliability of the device have been demonstrated fully. TI's standard warranty applies.

Predictions show that prototype devices (XMS) have a greater failure rate than the standard production devices. TI recommends that these devices not be used in any production system because their expected end-use failure rate still is undefined. Only qualified production devices are to be used.

TI device nomenclature also includes a suffix with the device family name. This suffix indicates the temperature range, package type, and distribution format. 图 8-1 provides a legend for reading the complete device name.

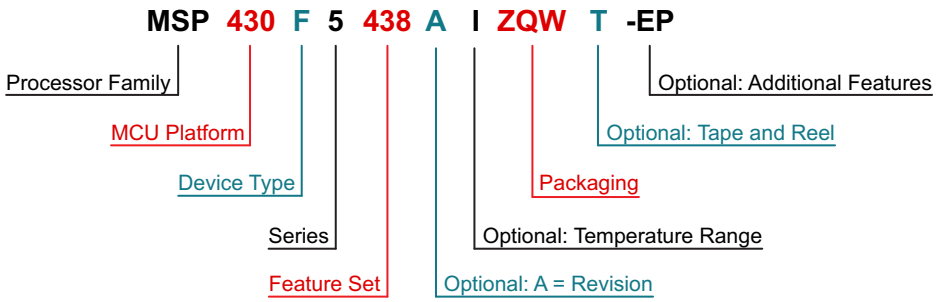

Processor Family	CC = Embedded RF Radio MSP = Mixed-Signal Processor XMS = Experimental Silicon PMS = Prototype Device	
MCU Platform	430 = MSP430 low-power microcontroller platform	
Device Type	**Memory Type** C = ROM F = Flash FR = FRAM G = Flash or FRAM (Value Line) L = No Nonvolatile Memory	**Specialized Application** AFE = Analog Front End BQ = Contactless Power CG = ROM Medical FE = Flash Energy Meter FG = Flash Medical FW = Flash Electronic Flow Meter
Series	1 = Up to 8 MHz 2 = Up to 16 MHz 3 = Legacy 4 = Up to 16 MHz with LCD	5 = Up to 25 MHz 6 = Up to 25 MHz with LCD 0 = Low-Voltage Series
Feature Set	Various levels of integration within a series	
Optional: A = Revision	N/A	
Optional: Temperature Range	S = 0°C to 50°C C = 0°C to 70°C I = –40°C to 85°C T = –40°C to 105°C	
Packaging	http://www.ti.com/packaging	
Optional: Tape and Reel	T = Small reel R = Large reel No markings = Tube or tray	
Optional: Additional Features	-EP = Enhanced Product (–40°C to 105°C) -HT = Extreme Temperature Parts (–55°C to 150°C) -Q1 = Automotive Q100 Qualified	

图 **8-1. Device Nomenclature**

版权 © 2014–2018, Texas Instruments Incorporated

8.3 工具与软件

所有 MSP 微控制器均受多种软件和硬件开发工具的支持。相关工具由 TI 以及多家第三方供应商提供。请参阅《MSP430 超低功耗 MCU – 工具与软件》，了解所有工具。

表 8-1 列出 了 MSP430F677x1A、MSP430F676x1A 和 MSP430F674x1A MCU 的调试功能。关于可用特性的详细信息，请参见*《适用于 MSP430 的 Code Composer Studio 用户指南》*。

表 8-1. 硬件调试 特性

MSP430 架构	四线制 JTAG	两线制 JTAG	断点 (N)	范围断点	时钟控制	状态序列发生器	跟踪缓冲器	LPMx.5 调试支持
MSP430Xv2	有	有	3	有	是	否	否	有

设计套件与评估模块

用于计量的三相电子电表 EVM (EVM430-F6779) 该 EVM430-F6779 是一款基于 MSP430F6779A 器件的三相电表评估板。该电表支持三种电压和三种电流的输入，具有可展示防篡改功能的附加连接。利用该 EVM，您可以测试新的 F677x、F674x、F676x、F677x1、F674x1、F676x1 系列并查看高精度结果、实现的宽动态范围以及易于校准性。易于使用的能源库提供了计量软件，可通过此 EVM 快速启动。此外，该软件还具备可编程功能，可满足所有用户需求。

采用增强型 ESD 保护和篡改检测功能的三相计量参考设计 此设计实现了一个具有增强型 ESD 保护的 ANSI/IEC 0.2 类三相能量计。该设计还 具有 篡改检测功能，以限制通过 ZigBee™ 连接进行能源盗窃和通信的可行性。使用电表 SoC 来执行所有计量功能并将有功功率结果发送到 CC2530EM 附加板。开发人员可以使用配套的家用能源显示设备 TI 设计 (TIDM-LOWEND-IHD) 来远程显示结果。

适用于 MSP430F6x MCU 的 128 引脚目标开发板和 MSP-FET 编程器捆绑包 MSP-FET430U128 是一款强大的闪存仿真工具，可在 MSP430 MCU 上快速开始应用开发。它包含 USB 调试接口，用于通过 JTAG 接口或节省引脚的 Spy-Bi-Wire（两线制 JTAG）协议在系统内对 MSP430 进行编程和调试。

软件

MSP430Ware™ 软件 MSP430Ware 软件集合了所有 MSP430 器件的代码示例、数据表以及其他设计资源，打包提供给用户。除了提供已有 MSP430 设计资源的完整集合外，MSP430Ware 软件还包含名为 MSP 驱动程序库的高级 API。借助该库可以轻松地对 MSP430 硬件进行编程。MSP430Ware 软件以 CCS 组件或独立软件包两种形式提供。

适用于 MSP430 MCU 的电能测量设计中心 电能测量设计中心是一款快速开发工具，它使用 TI MSP430i20xx 和 MSP430F67xx 基于闪存的微控制器 (MCU) 实现电能测量。它包含能够在各种电源监控和电能测量应用（包括智能电网和楼宇自动化）中简化开发和加快设计的图形用户界面 (GUI)、文档、 软件库和示例。使用设计中心，您无需编写任何代码即可配置、校准并查看结果。

MSP 驱动程序库 MSP 驱动程序库的抽象 API 提供易用的函数调用，无需直接操纵 MSP430 硬件的位与字节。完整的文档通过具有帮助意义的 API 指南交付，其中包括有关每个函数调用和经过验证的参数的详细信息。开发人员可使用驱动程序库函数以尽可能低的费用编写全部项目。

MSP430F677x(1)A、MSP430F676x(1)A、MSP430F674x(1)A 代码示例 为每个 MSP 器件提供了根据不同应用需求配置各集成外设的 C 代码示例。

MSP EnergyTrace™ 技术 适用于 MSP430 微控制器的 EnergyTrace 技术是基于电能的代码分析工具，适用于测量和显示应用的电能系统配置并帮助优化应用以实现超低功耗。

ULP（超低功耗）Advisor ULP Advisor™软件是一款辅助工具，旨在指导开发人员编写更为高效的代码，从而充分利用 MSP430 和 MSP432 微控制器 独特 功能。ULP Advisor 的目标人群是微控制器的资深开发者和开发新手，可以根据详尽的 ULP 检验表检查代码，以便最大限度地减少应用程序的能耗。在编译时，ULP Advisor 会提供通知和备注以突出显示代码中可以进一步优化的区域，进而实现更低功耗。

适用于 MSP 的定点数学库 MSP IQmath 和 Qmath 库是为 C 语言开发者提供的一套经过高度优化的高精度数学运算函数集合，能够将浮点算法无缝嵌入 MSP430 和 MSP432 器件的定点代码中。这些例程通常用于计算密集型实时 应用， 而优化的执行速度、高精度以及超低能耗通常是影响这些实时应用的关键因素。与使用浮点数学算法编写的同等代码相比，使用 IQmath 和 Qmath 库可以大幅提高执行速度并显著降低能耗。

适用于 MSP430 的浮点数学运算库 TI 在低功耗和低成本微控制器领域锐意创新，为您提供 MSPMATHLIB。此标量函数的浮点数学运算库，能够充分利用器件的智能外设，使速度最高达到标准 MSP430 数学函数的 26 倍。Mathlib 能够轻松集成到您的设计中。该运算库免费使用并集成在 Code Composer Studio IDE 和 IAR Embedded Workbench IDE 中。

开发工具

适用于 MSP 微控制器的 Code Composer Studio™ 集成开发环境 Code Composer Studio (CCS) 集成开发环境 (IDE) 支持所有 MSP 微控制器器件。CCS 包含一整套用于开发和调试嵌入式 应用的工具。它包含了优化的 C/C++ 编译器、源代码编辑器、项目构建环境、调试器、描述器以及其他多种 功能。

命令行编程器 MSP Flasher 是一款基于 shell 的开源接口，可使用 JTAG 或 Spy-Bi-Wire (SBW) 通信通过 FET 编程器或 eZ430 对 MSP 微控制器进行编程。MSP Flasher 可用于将二进制文件（.txt 或 .hex 文件）直接下载到 MSP 微控制器，而无需使用 IDE。

MSP MCU 编程器和调试器 MSP-FET 是一款强大的仿真开发工具（通常称为调试探针），可帮助用户在 MSP 低功耗微控制器 (MCU) 中快速开发应用。创建 MCU 软件通常需要将生成的二进制程序下载到 MSP 器件中，从而进行验证和调试。

MSP-GANG 生产编程器 MSP Gang 编程器是一款 MSP430 或 MSP432 器件编程器，可同时对多达八个完全相同的 MSP430 或 MSP432 闪存或 FRAM 器件进行编程。MSP Gang 编程器可使用标准的 RS-232 或 USB 连接与主机 PC 相连并提供灵活的编程选项，允许用户完全自定义流程。

版权 © 2014–2018, Texas Instruments Incorporated

8.4 文档支持

以下文档对 MSP430F677x1A、MSP430F676x1A 和 MSP430F674x1A MCU 进行了介绍。www.ti.com.cn 网站上提供了这些文档的副本。

接收文档更新通知

要接收文档更新通知（包括芯片勘误表），请转至 ti.com.cn 上您的器件对应的产品文件夹（关于产品文件夹的链接，请参见节 8.5）。请单击右上角的“通知我”按钮。点击注册后，即可收到产品信息更改每周摘要（如有）。有关更改的详细信息，请查阅已修订文档的修订历史记录。

勘误

《MSP430F67791A 器件勘误表》 介绍功能规格的已知例外情况。

《MSP430F67781A 器件勘误表》 介绍功能规格的已知例外情况。

《MSP430F67771A 器件勘误表》 介绍功能规格的已知例外情况。

《MSP430F67761A 器件勘误表》 介绍功能规格的已知例外情况。

《MSP430F67751A 器件勘误表》 介绍功能规格的已知例外情况。

《MSP430F67691A 器件勘误表》 介绍功能规格的已知例外情况。

《MSP430F67681A 器件勘误表》 介绍功能规格的已知例外情况。

《MSP430F67671A 器件勘误表》 介绍功能规格的已知例外情况。

《MSP430F67661A 器件勘误表》 介绍功能规格的已知例外情况。

《MSP430F67651A 器件勘误表》 介绍功能规格的已知例外情况。

《MSP430F67491A 器件勘误表》 介绍功能规格的已知例外情况。

《MSP430F67481A 器件勘误表》 介绍功能规格的已知例外情况。

《MSP430F67471A 器件勘误表》 介绍功能规格的已知例外情况。

《MSP430F67461A 器件勘误表》 介绍功能规格的已知例外情况。

《MSP430F67451A 器件勘误表》 介绍功能规格的已知例外情况。

用户指南

《MSP430x5xx 和 MSP430x6xx 系列用户指南》 详细介绍了该器件系列提供的模块和外设。

《MSP430™ 闪存器件引导加载程序 (BSL) 用户指南》 MSP430 引导加载程序 (BSL) 允许用户在原型设计、投产和维护等各阶段与 MSP430 微控制器中的嵌入式存储器进行通信。可编程存储器（闪存）和数据存储器 (RAM) 可根据相关要求进行变更。不要将此处的引导加载程序与某些数字信号处理器 (DSP) 中将外部存储器中的程序代码（和数据）自动加载到 DSP 内部存储器的引导装载程序混为一谈。

《通过 JTAG 接口对 MSP430 进行编程》 此文档介绍了使用 JTAG 通信端口擦除、编程和验证基于 MSP430 闪存和 FRAM 的微控制器系列的存储器模块所需的功能。此外，该文档还介绍了如何编程所有 MSP430 器件上均具备的 JTAG 访问安全保险丝。此文档介绍了使用标准四线制 JTAG 接口和两线制 JTAG 接口（也称为 Spy-Bi-Wire (SBW)）的器件访问。

《MSP430 硬件工具用户指南》 此手册介绍了 TI MSP-FET430 闪存仿真工具 (FET) 的硬件。FET 是针对 MSP430 超低功耗微控制器的程序开发工具。文中对提供的接口类型，即并行端口接口和 USB 接口进行了说明。

应用报告

《使用 MSP430F677x(A) 实施三相电子电表》 该应用报告介绍了如何使用 MSP430F677x(A) 计量处理器实现三相电子电表。该应用报告包含有关此单芯片实现的计量软件、硬件程序的必要信息。

《使用 TI 的 DLMS COSEM 库》 该应用报告详细介绍了如何使用德州仪器 (TI) 为在计量应用中使用 TI 微控制器的客户 开发的 DLMS COSEM 库。该库作为目标代码提供，具有易于使用的配置文件。可以通过联系区域销售和营销办事处获得该库。

《MSP430F67xx 与 MSP430F67xxA 器件之间的差异》 该应用报告介绍了非 A MSP430F67xx 器件对 MSP430F67xxA 器件的增强功能。该应用报告介绍了在 MSP430F67xxA 中修复的 MSP430F67xx 勘误表以及向 MSP430F67xxA 器件 添加的 其他功能。此外，还比较了计量结果，以进一步展示 MSP430F67xxA 器件中实现的更改不会影响计量性能。

《MSP430 32kHz 晶体振荡器》 对于稳定的晶体振荡器，选择合适的晶振、正确的负载电路和适当的电路板布局布线至关重要。该应用报告总结了晶体振荡器的功能，介绍了用于选择合适的晶体以实现 MSP430 超低功耗运行的参数。此外，还给出了正确电路板布局的提示和示例。此外，为了确保振荡器在大规模生产后能够稳定运行，还可能需要进行一些振荡器测试，该文档中提供了有关这些测试的详细信息。

《MSP430 系统级 ESD 注意事项》 随着硅晶技术向更低电压方向发展以及设计具有成本效益的超低功耗组件的需求的出现，系统级 ESD 要求变得越来越苛刻。该应用报告介绍了三个不同的 ESD 主题，旨在帮助电路板设计人员和 OEM 理解并设计出稳健耐用的系统级设计。

《使用 MSP430 和段式 LCD 进行设计》 从智能电表，到电子货架标签 (ESL)，再到医疗设备，各式各样的应用 都需要使用段式液晶显示屏 (LCD) 为用户 提供相关信息。部分 MSP430™ 微控制器系列内置低功耗 LCD 驱动电路，MSP430 MCU 借此能够直接控制段式 LCD 玻璃。本应用手册可帮助您理解段式 LCD 的工作原理、MSP430 MCU 系列各种 LCD 模块的不同特性， 并提供了 LCD 硬件布线技巧、编写高效易用的 LCD 驱动软件的相关指导以及 具有不同 LCD 特性的 MSP430 器件的 产品组合概述， 旨在协助您进行器件选型。

版权 © 2014–2018, Texas Instruments Incorporated

8.5 相关链接

表 8-2 列出了快速访问链接。类别包括技术文档、支持与社区资源、工具与软件，以及申请样片或购买产品的快速链接。

表 8-2. 相关链接

器件	产品文件夹	立即订购	技术文档	工具与软件	支持和社区
MSP430F67791A	请单击此处	请单击此处	请单击此处	请单击此处	请单击此处
MSP430F67781A	请单击此处	请单击此处	请单击此处	请单击此处	请单击此处
MSP430F67771A	请单击此处	请单击此处	请单击此处	请单击此处	请单击此处
MSP430F67761A	请单击此处	请单击此处	请单击此处	请单击此处	请单击此处
MSP430F67751A	请单击此处	请单击此处	请单击此处	请单击此处	请单击此处
MSP430F67691A	请单击此处	请单击此处	请单击此处	请单击此处	请单击此处
MSP430F67681A	请单击此处	请单击此处	请单击此处	请单击此处	请单击此处
MSP430F67671A	请单击此处	请单击此处	请单击此处	请单击此处	请单击此处
MSP430F67661A	请单击此处	请单击此处	请单击此处	请单击此处	请单击此处
MSP430F67651A	请单击此处	请单击此处	请单击此处	请单击此处	请单击此处
MSP430F67491A	请单击此处	请单击此处	请单击此处	请单击此处	请单击此处
MSP430F67481A	请单击此处	请单击此处	请单击此处	请单击此处	请单击此处
MSP430F67471A	请单击此处	请单击此处	请单击此处	请单击此处	请单击此处
MSP430F67461A	请单击此处	请单击此处	请单击此处	请单击此处	请单击此处
MSP430F67451A	请单击此处	请单击此处	请单击此处	请单击此处	请单击此处

8.6 社区资源

下列链接提供到 TI 社区资源的连接。链接的内容由各个分销商“按照原样”提供。这些内容并不构成 TI 技术规范，并且不一定反映 TI 的观点；请参见 TI 的 《使用条款》。

TI E2E™ 社区
TI 的工程师交流 (E2E) 社区. 此社区的创建目的是为了促进工程师之间协作。在 e2e.ti.com 中，您可以提问、共享知识、拓展思路，在同领域工程师的帮助下解决问题。

TI 嵌入式处理器维基网页
德州仪器 (TI) 嵌入式处理器维基网页。此网站的建立是为了帮助开发人员熟悉德州仪器 (TI) 的嵌入式处理器，并且也为了促进与这些器件相关的硬件和软件的总体知识的创新和增长。

8.7 商标

MSP430, MSP430Ware, EnergyTrace, ULP Advisor, 适用于 MSP 微控制器的 Code Composer Studio, E2E are trademarks of Texas Instruments.
Wi-Fi is a registered trademark of Wi-Fi Alliance.
ZigBee is a registered trademark of ZigBee Alliance.

8.8 静电放电警告

ESD 可能会损坏该集成电路。德州仪器 (TI) 建议通过适当的预防措施处理所有集成电路。如果不遵守正确的处理措施和安装程序，可能会损坏集成电路。

ESD 的损坏小至导致微小的性能降级，大至整个器件故障。 精密的集成电路可能更容易受到损坏，这是因为非常细微的参数更改都可能会导致器件与其发布的规格不相符。

8.9 Glossary

TI Glossary This glossary lists and explains terms, acronyms, and definitions.

9 机械、封装和可订购信息

以下页面包含机械、封装和可订购信息。这些信息是指定器件的最新可用数据。数据如有变更，恕不另行通知，且不会对此文档进行修订。如需获取此数据表的浏览器版本，请查阅左侧的导航栏。

版权 © 2014–2018, Texas Instruments Incorporated

PACKAGING INFORMATION

Orderable Device	Status (1)	Package Type	Package Drawing	Pins	Package Qty	Eco Plan (2)	Lead finish/ Ball material (6)	MSL Peak Temp (3)	Op Temp (°C)	Device Marking (4/5)	Samples
MSP430F67451AIPEU	ACTIVE	LQFP	PEU	128	72	RoHS & Green	NIPDAU	Level-3-260C-168 HR	-40 to 85	F67451A	Samples
MSP430F67451AIPEUR	ACTIVE	LQFP	PEU	128	750	RoHS & Green	NIPDAU	Level-3-260C-168 HR	-40 to 85	F67451A	Samples
MSP430F67451AIPZ	ACTIVE	LQFP	PZ	100	90	RoHS & Green	NIPDAU	Level-3-260C-168 HR	-40 to 85	F67451A	Samples
MSP430F67451AIPZR	ACTIVE	LQFP	PZ	100	1000	RoHS & Green	NIPDAU	Level-3-260C-168 HR	-40 to 85	F67451A	Samples
MSP430F67461AIPEU	ACTIVE	LQFP	PEU	128	72	RoHS & Green	NIPDAU	Level-3-260C-168 HR	-40 to 85	F67461A	Samples
MSP430F67461AIPEUR	ACTIVE	LQFP	PEU	128	750	RoHS & Green	NIPDAU	Level-3-260C-168 HR	-40 to 85	F67461A	Samples
MSP430F67461AIPZ	ACTIVE	LQFP	PZ	100	90	RoHS & Green	NIPDAU	Level-3-260C-168 HR	-40 to 85	F67461A	Samples
MSP430F67461AIPZR	ACTIVE	LQFP	PZ	100	1000	RoHS & Green	NIPDAU	Level-3-260C-168 HR	-40 to 85	F67461A	Samples
MSP430F67471AIPEU	ACTIVE	LQFP	PEU	128	72	RoHS & Green	NIPDAU	Level-3-260C-168 HR	-40 to 85	F67471A	Samples
MSP430F67471AIPEUR	ACTIVE	LQFP	PEU	128	750	RoHS & Green	NIPDAU	Level-3-260C-168 HR	-40 to 85	F67471A	Samples
MSP430F67471AIPZ	ACTIVE	LQFP	PZ	100	90	RoHS & Green	NIPDAU	Level-3-260C-168 HR	-40 to 85	F67471A	Samples
MSP430F67471AIPZR	ACTIVE	LQFP	PZ	100	1000	RoHS & Green	NIPDAU	Level-3-260C-168 HR	-40 to 85	F67471A	Samples
MSP430F67481AIPEU	ACTIVE	LQFP	PEU	128	72	RoHS & Green	NIPDAU	Level-3-260C-168 HR	-40 to 85	F67481A	Samples
MSP430F67481AIPEUR	ACTIVE	LQFP	PEU	128	750	RoHS & Green	NIPDAU	Level-3-260C-168 HR	-40 to 85	F67481A	Samples
MSP430F67481AIPZ	ACTIVE	LQFP	PZ	100	90	RoHS & Green	NIPDAU	Level-3-260C-168 HR	-40 to 85	F67481A	Samples
MSP430F67481AIPZR	ACTIVE	LQFP	PZ	100	1000	RoHS & Green	NIPDAU	Level-3-260C-168 HR	-40 to 85	F67481A	Samples
MSP430F67491AIPEU	ACTIVE	LQFP	PEU	128	72	RoHS & Green	NIPDAU	Level-3-260C-168 HR	-40 to 85	F67491A	Samples
MSP430F67491AIPEUR	ACTIVE	LQFP	PEU	128	750	RoHS & Green	NIPDAU	Level-3-260C-168 HR	-40 to 85	F67491A	Samples
MSP430F67491AIPZ	ACTIVE	LQFP	PZ	100	90	RoHS & Green	NIPDAU	Level-3-260C-168 HR	-40 to 85	F67491A	Samples
MSP430F67491AIPZR	ACTIVE	LQFP	PZ	100	1000	RoHS & Green	NIPDAU	Level-3-260C-168 HR	-40 to 85	F67491A	Samples

Orderable Device	Status (1)	Package Type	Package Drawing	Pins	Package Qty	Eco Plan (2)	Lead finish/ Ball material (6)	MSL Peak Temp (3)	Op Temp (°C)	Device Marking (4/5)	Samples
MSP430F67651AIPEU	ACTIVE	LQFP	PEU	128	72	RoHS & Green	NIPDAU	Level-3-260C-168 HR	-40 to 85	F67651A	Samples
MSP430F67651AIPEUR	ACTIVE	LQFP	PEU	128	750	RoHS & Green	NIPDAU	Level-3-260C-168 HR	-40 to 85	F67651A	Samples
MSP430F67651AIPZ	ACTIVE	LQFP	PZ	100	90	RoHS & Green	NIPDAU	Level-3-260C-168 HR	-40 to 85	F67651A	Samples
MSP430F67651AIPZR	ACTIVE	LQFP	PZ	100	1000	RoHS & Green	NIPDAU	Level-3-260C-168 HR	-40 to 85	F67651A	Samples
MSP430F67661AIPEU	ACTIVE	LQFP	PEU	128	72	RoHS & Green	NIPDAU	Level-3-260C-168 HR	-40 to 85	F67661A	Samples
MSP430F67661AIPEUR	ACTIVE	LQFP	PEU	128	750	RoHS & Green	NIPDAU	Level-3-260C-168 HR	-40 to 85	F67661A	Samples
MSP430F67661AIPZ	ACTIVE	LQFP	PZ	100	90	RoHS & Green	NIPDAU	Level-3-260C-168 HR	-40 to 85	F67661A	Samples
MSP430F67661AIPZR	ACTIVE	LQFP	PZ	100	1000	RoHS & Green	NIPDAU	Level-3-260C-168 HR	-40 to 85	F67661A	Samples
MSP430F67671AIPEU	ACTIVE	LQFP	PEU	128	72	RoHS & Green	NIPDAU	Level-3-260C-168 HR	-40 to 85	F67671A	Samples
MSP430F67671AIPEUR	ACTIVE	LQFP	PEU	128	750	RoHS & Green	NIPDAU	Level-3-260C-168 HR	-40 to 85	F67671A	Samples
MSP430F67671AIPZ	ACTIVE	LQFP	PZ	100	90	RoHS & Green	NIPDAU	Level-3-260C-168 HR	-40 to 85	F67671A	Samples
MSP430F67671AIPZR	ACTIVE	LQFP	PZ	100	1000	RoHS & Green	NIPDAU	Level-3-260C-168 HR	-40 to 85	F67671A	Samples
MSP430F67681AIPEU	ACTIVE	LQFP	PEU	128	72	RoHS & Green	NIPDAU	Level-3-260C-168 HR	-40 to 85	F67681A	Samples
MSP430F67681AIPEUR	ACTIVE	LQFP	PEU	128	750	RoHS & Green	NIPDAU	Level-3-260C-168 HR	-40 to 85	F67681A	Samples
MSP430F67681AIPZ	ACTIVE	LQFP	PZ	100	90	RoHS & Green	NIPDAU	Level-3-260C-168 HR	-40 to 85	F67681A	Samples
MSP430F67681AIPZR	ACTIVE	LQFP	PZ	100	1000	RoHS & Green	NIPDAU	Level-3-260C-168 HR	-40 to 85	F67681A	Samples
MSP430F67691AIPEU	ACTIVE	LQFP	PEU	128	72	RoHS & Green	NIPDAU	Level-3-260C-168 HR	-40 to 85	F67691A	Samples
MSP430F67691AIPEUR	ACTIVE	LQFP	PEU	128	750	RoHS & Green	NIPDAU	Level-3-260C-168 HR	-40 to 85	F67691A	Samples
MSP430F67691AIPZ	ACTIVE	LQFP	PZ	100	90	RoHS & Green	NIPDAU	Level-3-260C-168 HR	-40 to 85	F67691A	Samples
MSP430F67691AIPZR	ACTIVE	LQFP	PZ	100	1000	RoHS & Green	NIPDAU	Level-3-260C-168 HR	-40 to 85	F67691A	Samples
MSP430F67751AIPEU	ACTIVE	LQFP	PEU	128	72	RoHS & Green	NIPDAU	Level-3-260C-168 HR	-40 to 85	F67751A	Samples

Orderable Device	Status (1)	Package Type	Package Drawing	Pins	Package Qty	Eco Plan (2)	Lead finish/ Ball material (6)	MSL Peak Temp (3)	Op Temp (°C)	Device Marking (4/5)	Samples
MSP430F67751AIPEUR	ACTIVE	LQFP	PEU	128	750	RoHS & Green	NIPDAU	Level-3-260C-168 HR	-40 to 85	F67751A	Samples
MSP430F67751AIPZ	ACTIVE	LQFP	PZ	100	90	RoHS & Green	NIPDAU	Level-3-260C-168 HR	-40 to 85	F67751A	Samples
MSP430F67751AIPZR	ACTIVE	LQFP	PZ	100	1000	RoHS & Green	NIPDAU	Level-3-260C-168 HR	-40 to 85	F67751A	Samples
MSP430F67761AIPEU	ACTIVE	LQFP	PEU	128	72	RoHS & Green	NIPDAU	Level-3-260C-168 HR	-40 to 85	F67761A	Samples
MSP430F67761AIPEUR	ACTIVE	LQFP	PEU	128	750	RoHS & Green	NIPDAU	Level-3-260C-168 HR	-40 to 85	F67761A	Samples
MSP430F67761AIPZ	ACTIVE	LQFP	PZ	100	90	RoHS & Green	NIPDAU	Level-3-260C-168 HR	-40 to 85	F67761A	Samples
MSP430F67761AIPZR	ACTIVE	LQFP	PZ	100	1000	RoHS & Green	NIPDAU	Level-3-260C-168 HR	-40 to 85	F67761A	Samples
MSP430F67771AIPEU	ACTIVE	LQFP	PEU	128	72	RoHS & Green	NIPDAU	Level-3-260C-168 HR	-40 to 85	F67771A	Samples
MSP430F67771AIPEUR	ACTIVE	LQFP	PEU	128	750	RoHS & Green	NIPDAU	Level-3-260C-168 HR	-40 to 85	F67771A	Samples
MSP430F67771AIPZ	ACTIVE	LQFP	PZ	100	90	RoHS & Green	NIPDAU	Level-3-260C-168 HR	-40 to 85	F67771A	Samples
MSP430F67771AIPZR	ACTIVE	LQFP	PZ	100	1000	RoHS & Green	NIPDAU	Level-3-260C-168 HR	-40 to 85	F67771A	Samples
MSP430F67781AIPEU	ACTIVE	LQFP	PEU	128	72	RoHS & Green	NIPDAU	Level-3-260C-168 HR	-40 to 85	F67781A	Samples
MSP430F67781AIPEUR	ACTIVE	LQFP	PEU	128	750	RoHS & Green	NIPDAU	Level-3-260C-168 HR	-40 to 85	F67781A	Samples
MSP430F67781AIPZ	ACTIVE	LQFP	PZ	100	90	RoHS & Green	NIPDAU	Level-3-260C-168 HR	-40 to 85	F67781A	Samples
MSP430F67781AIPZR	ACTIVE	LQFP	PZ	100	1000	RoHS & Green	NIPDAU	Level-3-260C-168 HR	-40 to 85	F67781A	Samples
MSP430F67791AIPEU	ACTIVE	LQFP	PEU	128	72	RoHS & Green	NIPDAU	Level-3-260C-168 HR	-40 to 85	F67791A	Samples
MSP430F67791AIPEUR	ACTIVE	LQFP	PEU	128	750	RoHS & Green	NIPDAU	Level-3-260C-168 HR	-40 to 85	F67791A	Samples
MSP430F67791AIPZ	ACTIVE	LQFP	PZ	100	90	RoHS & Green	NIPDAU	Level-3-260C-168 HR	-40 to 85	F67791A	Samples
MSP430F67791AIPZR	ACTIVE	LQFP	PZ	100	1000	RoHS & Green	NIPDAU	Level-3-260C-168 HR	-40 to 85	F67791A	Samples

(1) The marketing status values are defined as follows:
ACTIVE: Product device recommended for new designs.
LIFEBUY: TI has announced that the device will be discontinued, and a lifetime-buy period is in effect.

NRND: Not recommended for new designs. Device is in production to support existing customers, but TI does not recommend using this part in a new design.
PREVIEW: Device has been announced but is not in production. Samples may or may not be available.
OBSOLETE: TI has discontinued the production of the device.

(2) **RoHS:** TI defines "RoHS" to mean semiconductor products that are compliant with the current EU RoHS requirements for all 10 RoHS substances, including the requirement that RoHS substance do not exceed 0.1% by weight in homogeneous materials. Where designed to be soldered at high temperatures, "RoHS" products are suitable for use in specified lead-free processes. TI may reference these types of products as "Pb-Free".
RoHS Exempt: TI defines "RoHS Exempt" to mean products that contain lead but are compliant with EU RoHS pursuant to a specific EU RoHS exemption.
Green: TI defines "Green" to mean the content of Chlorine (Cl) and Bromine (Br) based flame retardants meet JS709B low halogen requirements of <=1000ppm threshold. Antimony trioxide based flame retardants must also meet the <=1000ppm threshold requirement.

(3) MSL, Peak Temp. - The Moisture Sensitivity Level rating according to the JEDEC industry standard classifications, and peak solder temperature.

(4) There may be additional marking, which relates to the logo, the lot trace code information, or the environmental category on the device.

(5) Multiple Device Markings will be inside parentheses. Only one Device Marking contained in parentheses and separated by a "~" will appear on a device. If a line is indented then it is a continuation of the previous line and the two combined represent the entire Device Marking for that device.

(6) Lead finish/Ball material - Orderable Devices may have multiple material finish options. Finish options are separated by a vertical ruled line. Lead finish/Ball material values may wrap to two lines if the finish value exceeds the maximum column width.

Important Information and Disclaimer: The information provided on this page represents TI's knowledge and belief as of the date that it is provided. TI bases its knowledge and belief on information provided by third parties, and makes no representation or warranty as to the accuracy of such information. Efforts are underway to better integrate information from third parties. TI has taken and continues to take reasonable steps to provide representative and accurate information but may not have conducted destructive testing or chemical analysis on incoming materials and chemicals. TI and TI suppliers consider certain information to be proprietary, and thus CAS numbers and other limited information may not be available for release.

In no event shall TI's liability arising out of such information exceed the total purchase price of the TI part(s) at issue in this document sold by TI to Customer on an annual basis.

TRAY

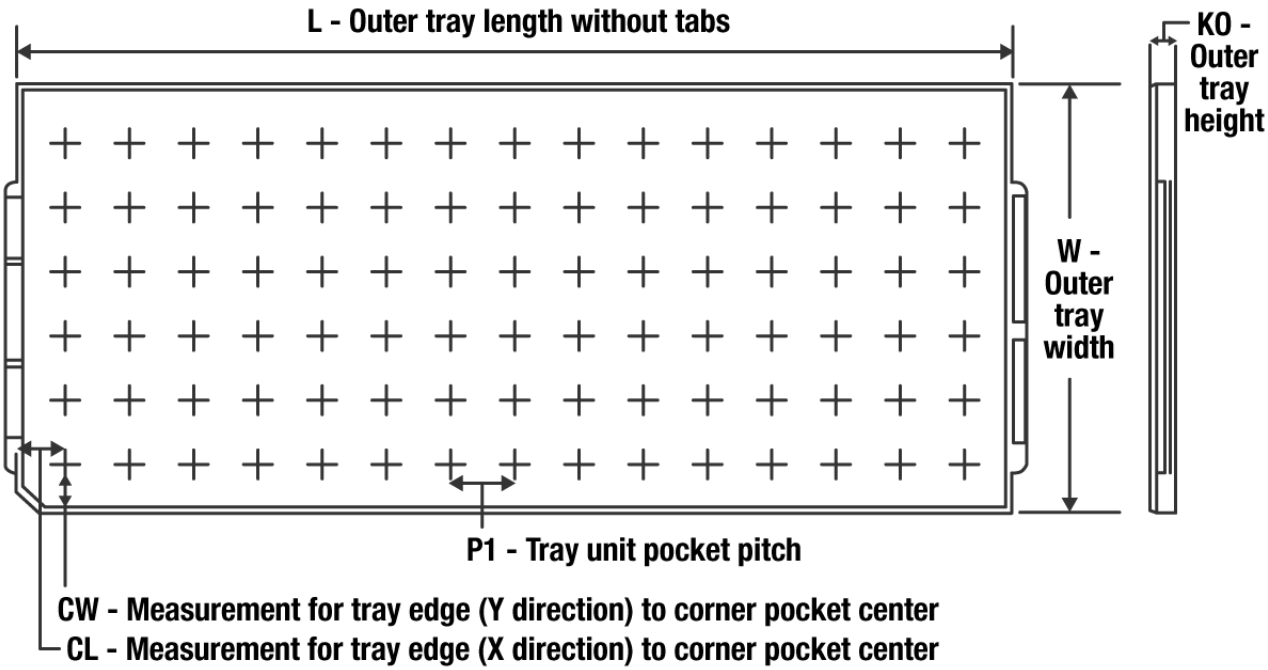

Chamfer on Tray corner indicates Pin 1 orientation of packed units.

*All dimensions are nominal

Device	Package Name	Package Type	Pins	SPQ	Unit array matrix	Max temperature (°C)	L (mm)	W (mm)	K0 (µm)	P1 (mm)	CL (mm)	CW (mm)
MSP430F67451AIPEU	PEU	LQFP	128	72	6X12	150	315	135.9	7620	25.4	17.8	15.45
MSP430F67461AIPEU	PEU	LQFP	128	72	6X12	150	315	135.9	7620	25.4	17.8	15.45
MSP430F67461AIPZ	PZ	LQFP	100	90	6 x 15	150	315	135.9	7620	20.3	15.4	15.45
MSP430F67471AIPEU	PEU	LQFP	128	72	6X12	150	315	135.9	7620	25.4	17.8	15.45
MSP430F67471AIPZ	PZ	LQFP	100	90	6 x 15	150	315	135.9	7620	20.3	15.4	15.45
MSP430F67481AIPEU	PEU	LQFP	128	72	6X12	150	315	135.9	7620	25.4	17.8	15.45
MSP430F67491AIPEU	PEU	LQFP	128	72	6X12	150	315	135.9	7620	25.4	17.8	15.45
MSP430F67651AIPEU	PEU	LQFP	128	72	6X12	150	315	135.9	7620	25.4	17.8	15.45
MSP430F67651AIPZ	PZ	LQFP	100	90	6 x 15	150	315	135.9	7620	20.3	15.4	15.45
MSP430F67661AIPZ	PZ	LQFP	100	90	6 x 15	150	315	135.9	7620	20.3	15.4	15.45
MSP430F67671AIPEU	PEU	LQFP	128	72	6X12	150	315	135.9	7620	25.4	17.8	15.45
MSP430F67681AIPEU	PEU	LQFP	128	72	6X12	150	315	135.9	7620	25.4	17.8	15.45
MSP430F67681AIPZ	PZ	LQFP	100	90	6 x 15	150	315	135.9	7620	20.3	15.4	15.45
MSP430F67691AIPEU	PEU	LQFP	128	72	6X12	150	315	135.9	7620	25.4	17.8	15.45
MSP430F67751AIPEU	PEU	LQFP	128	72	6X12	150	315	135.9	7620	25.4	17.8	15.45
MSP430F67751AIPZ	PZ	LQFP	100	90	6 x 15	150	315	135.9	7620	20.3	15.4	15.45
MSP430F67761AIPEU	PEU	LQFP	128	72	6X12	150	315	135.9	7620	25.4	17.8	15.45

Device	Package Name	Package Type	Pins	SPQ	Unit array matrix	Max temperature (°C)	L (mm)	W (mm)	K0 (µm)	P1 (mm)	CL (mm)	CW (mm)
MSP430F67761AIPZ	PZ	LQFP	100	90	6 x 15	150	315	135.9	7620	20.3	15.4	15.45
MSP430F67771AIPEU	PEU	LQFP	128	72	6X12	150	315	135.9	7620	25.4	17.8	15.45
MSP430F67771AIPZ	PZ	LQFP	100	90	6 x 15	150	315	135.9	7620	20.3	15.4	15.45
MSP430F67781AIPEU	PEU	LQFP	128	72	6X12	150	315	135.9	7620	25.4	17.8	15.45
MSP430F67791AIPEU	PEU	LQFP	128	72	6X12	150	315	135.9	7620	25.4	17.8	15.45
MSP430F67791AIPZ	PZ	LQFP	100	90	6 x 15	150	315	135.9	7620	20.3	15.4	15.45

PZ (S-PQFP-G100) **PLASTIC QUAD FLATPACK**

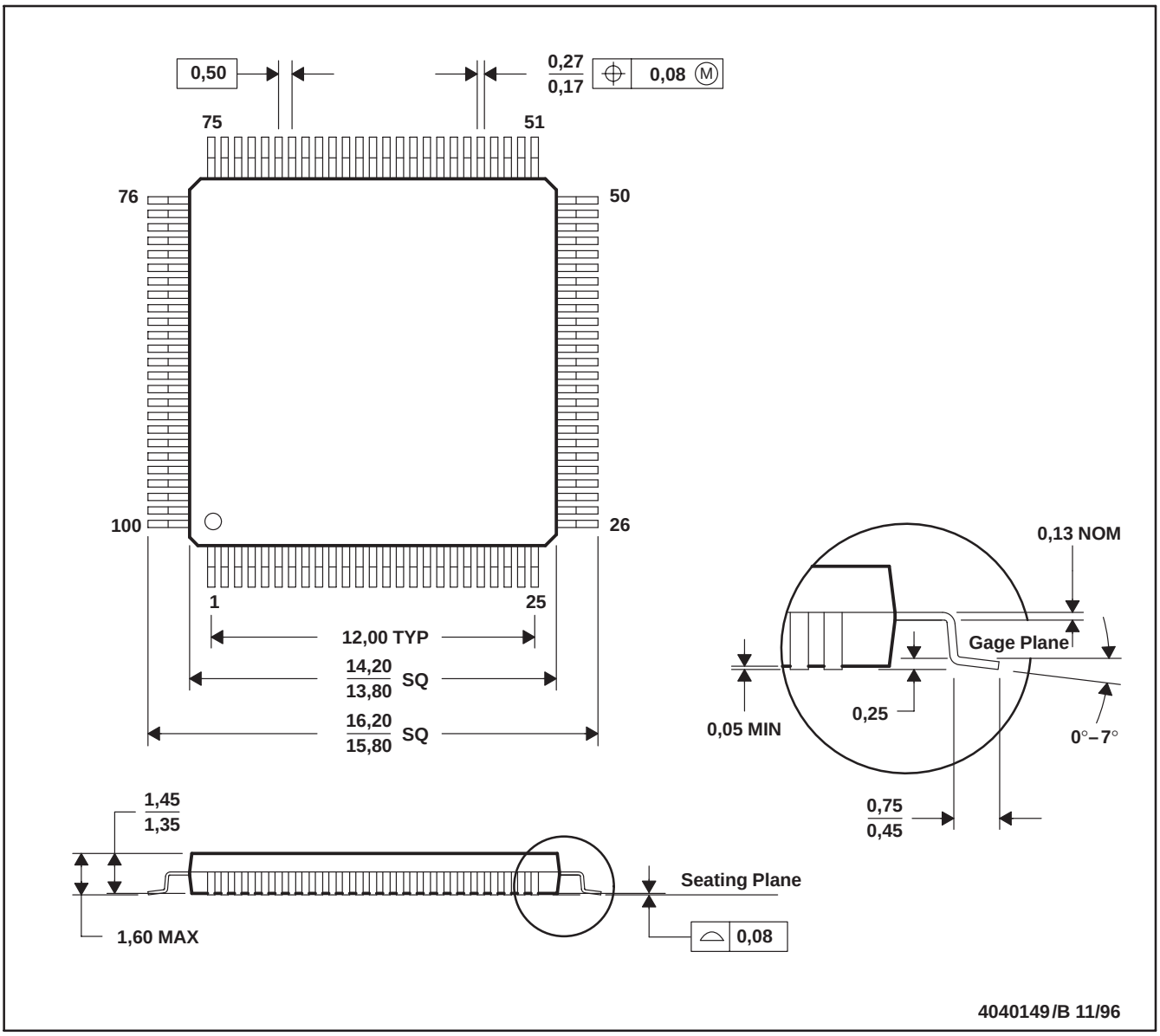

NOTES: A. All linear dimensions are in millimeters.
B. This drawing is subject to change without notice.
C. Falls within JEDEC MS-026

PZ (S–PQFP–G100) PLASTIC QUAD FLAT PACK

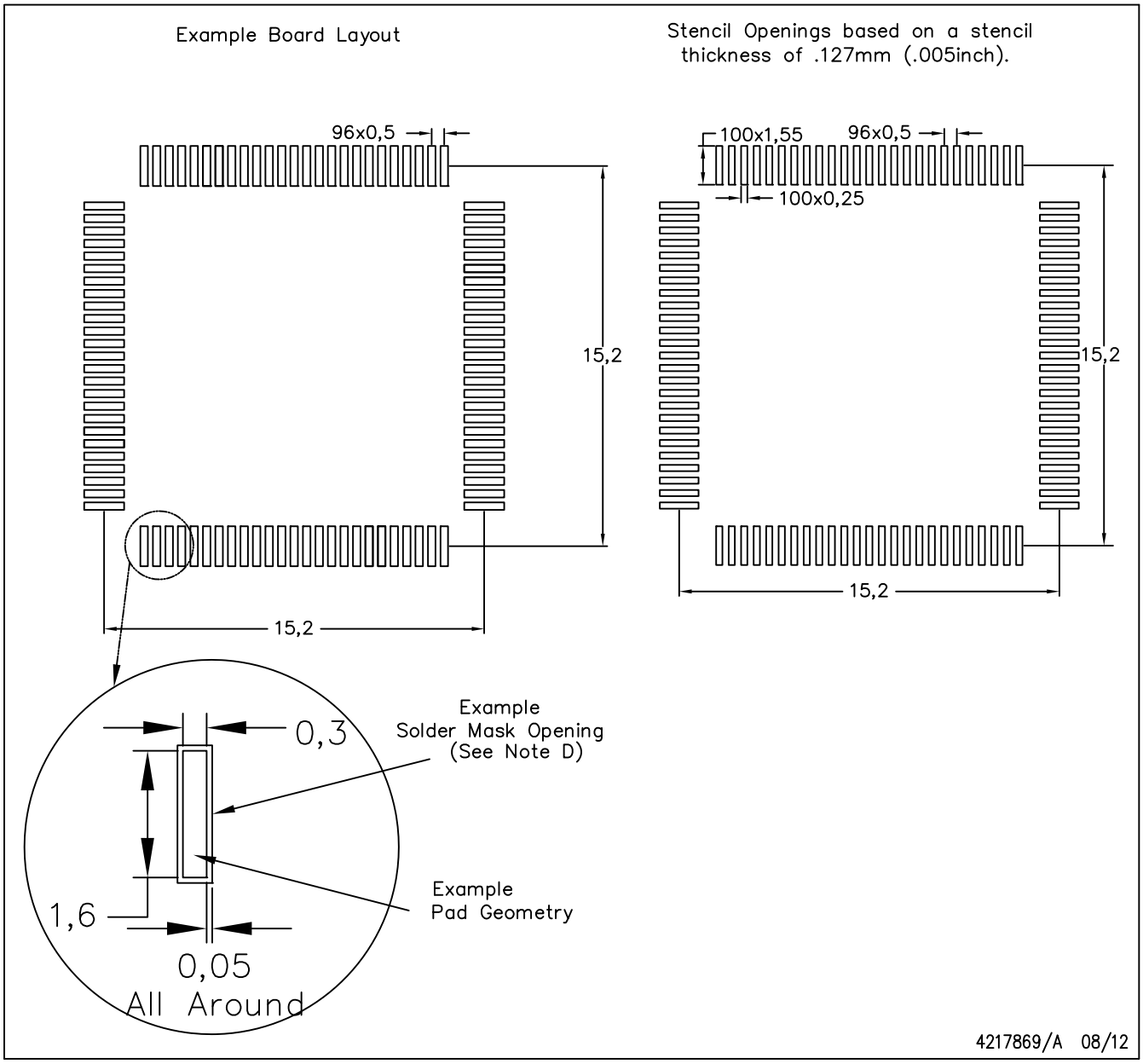

NOTES:

A. All linear dimensions are in millimeters.
B. This drawing is subject to change without notice.
C. Laser cutting apertures with trapezoidal walls and also rounding corners will offer better paste release. Customers should contact their board assembly site for stencil design recommendations. Example stencil design based on a 50% volumetric metal load solder paste. Refer to IPC–7525 for other stencil recommendations.
D. Customers should contact their board fabrication site for solder mask tolerances between and around signal pads.

PEU (R–PQFP–G128) PLASTIC QUAD FLATPACK

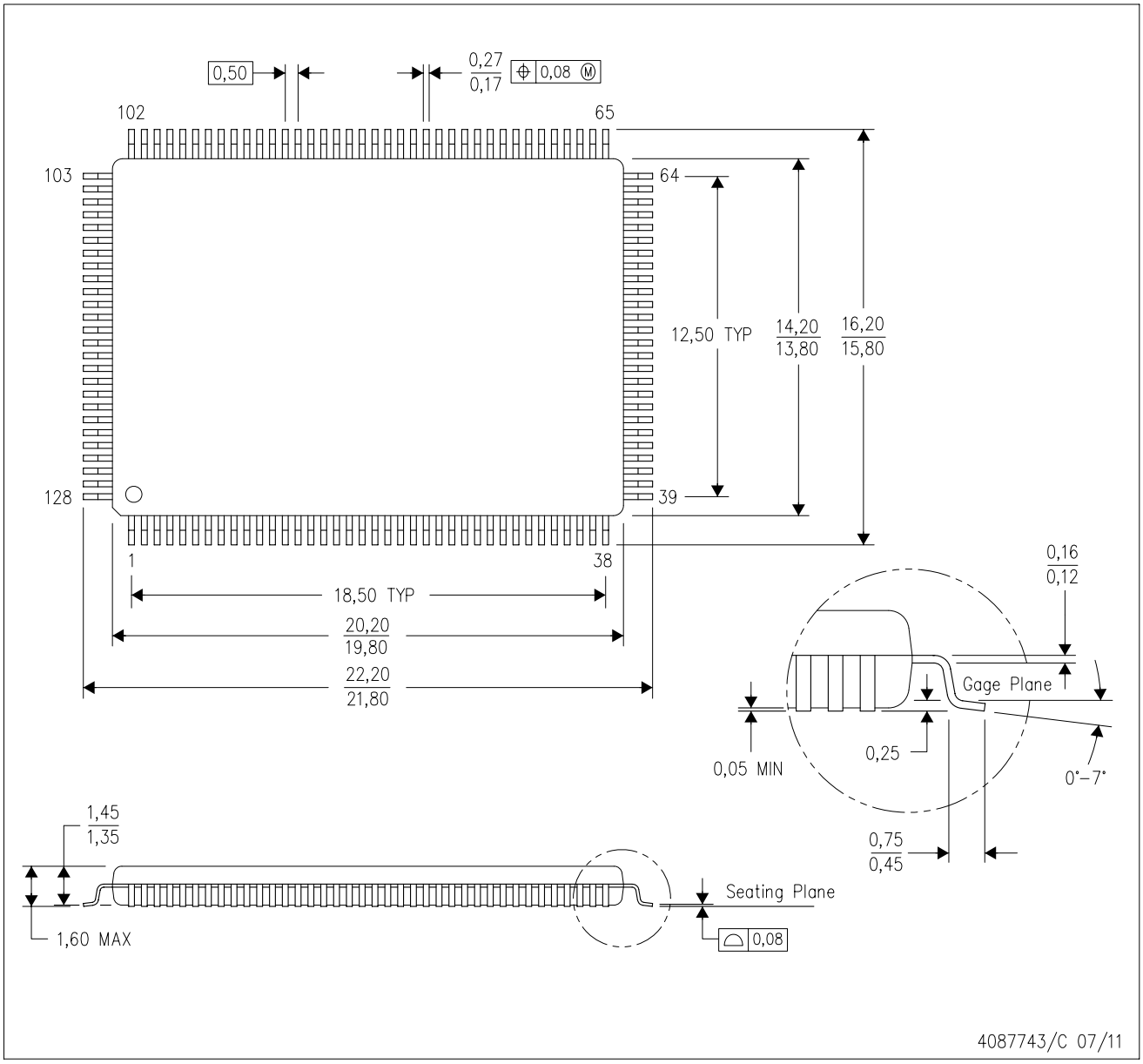

NOTES: A. All linear dimensions are in millimeters. Dimensioning and tolerancing per ASME Y14.5M–1994.
B. This drawing is subject to change without notice.
C. Falls within JEDEC MS–026

重要声明和免责声明

TI“按原样”提供技术和可靠性数据（包括数据表）、设计资源（包括参考设计）、应用或其他设计建议、网络工具、安全信息和其他资源，不保证没有瑕疵且不做出任何明示或暗示的担保，包括但不限于对适销性、某特定用途方面的适用性或不侵犯任何第三方知识产权的暗示担保。

这些资源可供使用 TI 产品进行设计的熟练开发人员使用。您将自行承担以下全部责任：(1) 针对您的应用选择合适的 TI 产品，(2) 设计、验证并测试您的应用，(3) 确保您的应用满足相应标准以及任何其他功能安全、信息安全、监管或其他要求。

这些资源如有变更，恕不另行通知。TI 授权您仅可将这些资源用于研发本资源所述的 TI 产品的应用。严禁对这些资源进行其他复制或展示。您无权使用任何其他 TI 知识产权或任何第三方知识产权。您应全额赔偿因在这些资源的使用中对 TI 及其代表造成的任何索赔、损害、成本、损失和债务，TI 对此概不负责。

TI 提供的产品受 TI 的销售条款或 ti.com 上其他适用条款/TI 产品随附的其他适用条款的约束。TI 提供这些资源并不会扩展或以其他方式更改 TI 针对 TI 产品发布的适用的担保或担保免责声明。

TI 反对并拒绝您可能提出的任何其他或不同的条款。

邮寄地址：Texas Instruments, Post Office Box 655303, Dallas, Texas 75265
Copyright © 2022，德州仪器 (TI) 公司