- **Wide Operating Voltage Range of 2 V to 6 V**
- **High-Current Inverting Outputs Drive Up To 15 LSTTL Loads**
- **Low Power Consumption, 80-μA Max I_{CC}**
- **'HC257 . . . Typical t_{pd} = 9 ns**
- **'HC258 . . . Typical t_{pd} = 12 ns**
- **±6-mA Output Drive at 5 V**
- **Low Input Current of 1 μA Max**
- **Provides Bus Interface from Multiple Sources in High-Performance Systems**

SN54HC257, SN54HC258 . . . J PACKAGE
SN74HC257, SN74HC258 . . . D, N, NS, OR PW PACKAGE
(TOP VIEW)

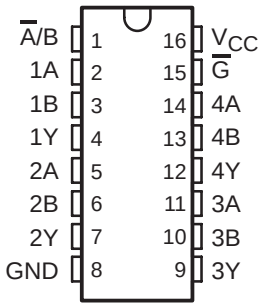

SN54HC257, SN54HC258 . . . FK PACKAGE
(TOP VIEW)

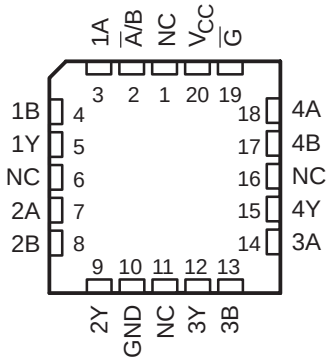

NC − No internal connection

description/ordering information

ORDERING INFORMATION

T_A	PACKAGE†		ORDERABLE PART NUMBER	TOP-SIDE MARKING
−40°C to 85°C	PDIP − N	Tube of 25	SN74HC257N	SN74HC257N
			SN74HC258N	SN74HC258N
	SOIC − D	Tube of 40	SN74HC257D	HC257
		Reel of 2500	SN74HC257DR	
		Reel of 250	SN74HC257DT	
		Tube of 40	SN74HC258D	HC258
		Reel of 2500	SN74HC258DR	
	SOP − NS	Reel of 2000	SN74HC257NSR	HC257
			SN74HC258NSR	HC258
	TSSOP − PW	Tube of 90	SN74HC257PW	HC257
		Reel of 2000	SN74HC257PWR	
		Reel of 250	SN74HC257PWT	
		Tube of 90	SN74HC258PW	HC258
		Reel of 2000	SN74HC258PWR	
		Reel of 250	SN74HC258PWT	
−55°C to 125°C	CDIP − J	Tube of 25	SNJ54HC257J	SNJ54HC257J
			SNJ54HC258J	SNJ54HC258J
	LCCC − FK	Tube of 55	SNJ54HC257FK	SNJ54HC257FK
			SNJ54HC258FK	SNJ54HC258FK

† Package drawings, standard packing quantities, thermal data, symbolization, and PCB design guidelines are available at www.ti.com/sc/package.

Please be aware that an important notice concerning availability, standard warranty, and use in critical applications of Texas Instruments semiconductor products and disclaimers thereto appears at the end of this data sheet.

PRODUCTION DATA information is current as of publication date. Products conform to specifications per the terms of Texas Instruments standard warranty. Production processing does not necessarily include testing of all parameters.

Copyright © 2003, Texas Instruments Incorporated
On products compliant to MIL-PRF-38535, all parameters are tested unless otherwise noted. On all other products, production processing does not necessarily include testing of all parameters.

description/ordering information (continued)

These devices are designed to multiplex signals from 4-bit data sources to 4-output data lines in bus-organized systems. The 3-state outputs do not load the data lines when the output-enable ($\overline{G}$) input is at a high logic level.

To ensure the high-impedance state during power up or power down, $\overline{G}$ should be tied to V_{CC} through a pullup resistor; the minimum value of the resistor is determined by the current-sinking capability of the driver.

FUNCTION TABLE

INPUTS				OUTPUT Y	
$\overline{G}$	$\overline{A}$/B	A	B	'HC257	'HC258
H	X	X	X	Z	Z
L	L	L	X	L	H
L	L	H	X	H	L
L	H	X	L	L	H
L	H	X	H	H	L

'HC257 logic diagram (positive logic)

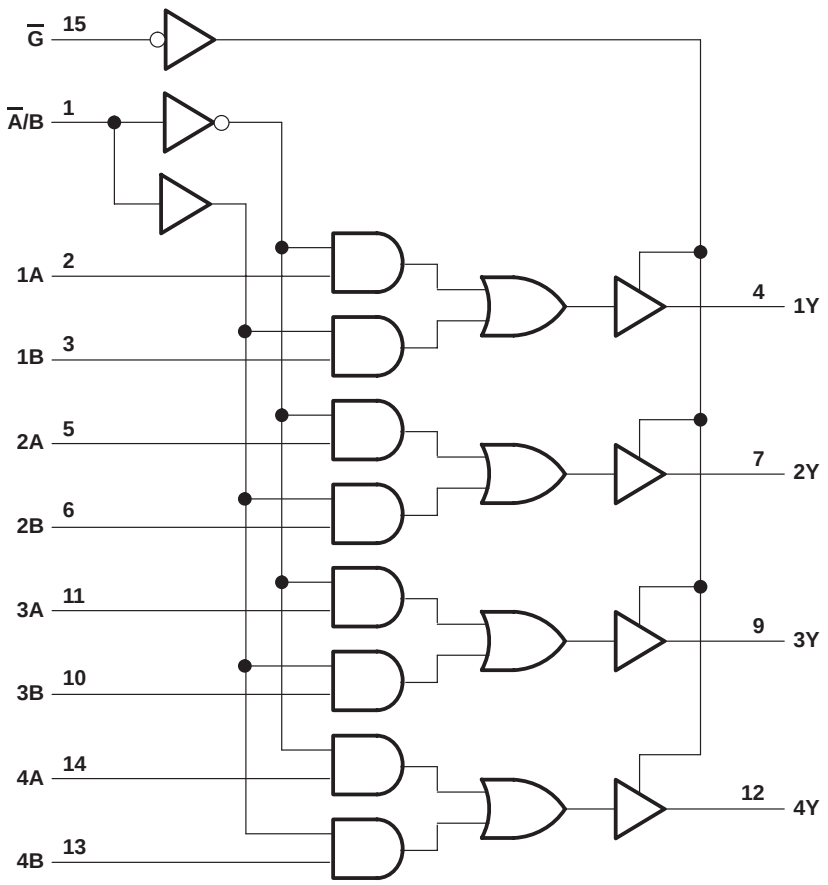

Pin numbers shown are for the D, J, N, NS, and PW packages.

’HC258 logic diagram (positive logic)

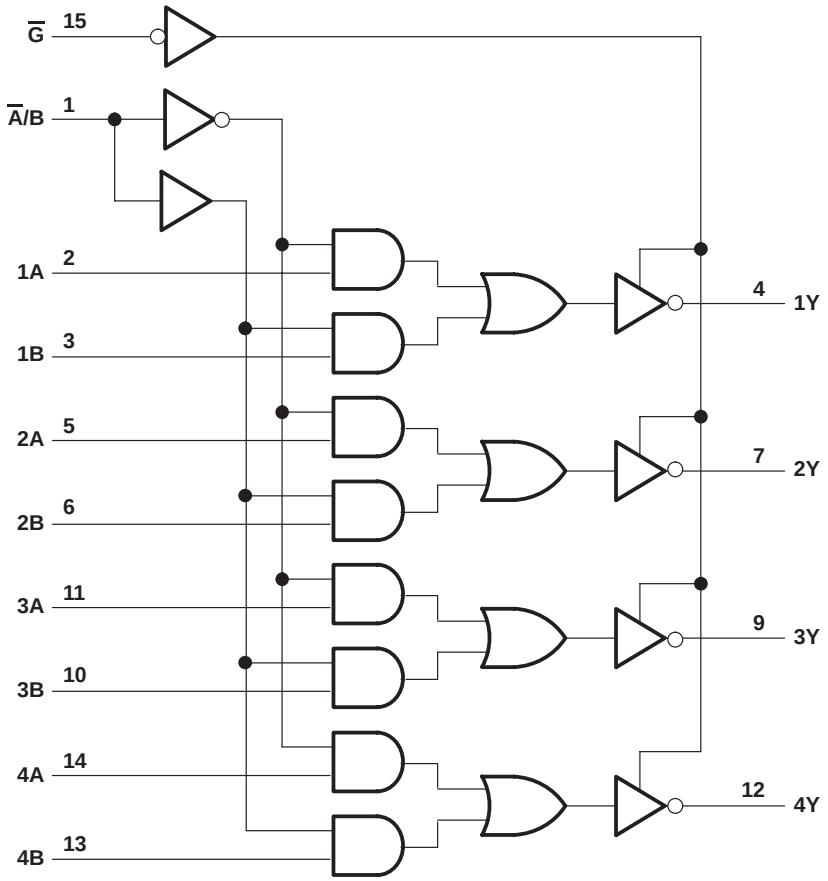

Pin numbers shown are for the D, J, N, NS, and PW packages.

absolute maximum ratings over operating free-air temperature range (unless otherwise noted)†

Supply voltage range, V_{CC}	−0.5 V to 7 V
Input clamp current, I_{IK} ($V_I < 0$ or $V_I > V_{CC}$)	±20 mA
Output clamp current, I_{OK} ($V_O < 0$ or $V_O > V_{CC}$)	±20 mA
Continuous output current, I_O ($V_O = 0$ to V_{CC})	±35 mA
Continuous current through V_{CC} or GND	±70 mA
Package thermal impedance, θ_{JA} (see Note 1): D package	73°C/W
N package	67°C/W
NS package	64°C/W
PW package	108°C/W
Storage temperature range, T_{stg}	−65°C to 150°C

† Stresses beyond those listed under “absolute maximum ratings” may cause permanent damage to the device. These are stress ratings only, and functional operation of the device at these or any other conditions beyond those indicated under “recommended operating conditions” is not implied. Exposure to absolute-maximum-rated conditions for extended periods may affect device reliability.

NOTE 1: The package thermal impedance is calculated in accordance with JESD 51-7.

recommended operating conditions (see Note 2)

			SN54HC257, SN54HC258			SN74HC257, SN74HC258			UNIT
			MIN	NOM	MAX	MIN	NOM	MAX	
V_{CC}	Supply voltage		2	5	6	2	5	6	V
V_{IH}	High-level input voltage	V_{CC} = 2 V	1.5			1.5			V
		V_{CC} = 4.5 V	3.15			3.15			
		V_{CC} = 6 V	4.2			4.2			
V_{IL}	Low-level input voltage	V_{CC} = 2 V			0.3			0.5	V
		V_{CC} = 4.5 V			0.9			1.35	
		V_{CC} = 6 V			1.2			1.8	
V_I	Input voltage		0		V_{CC}	0		V_{CC}	V
V_O	Output voltage		0		V_{CC}	0		V_{CC}	V
$\Delta t/\Delta v$	Input transition rise/fall time	V_{CC} = 2 V			1000			1000	ns
		V_{CC} = 4.5 V			500			500	
		V_{CC} = 6 V			400			400	
T_A	Operating free-air temperature		−55		125	−40		85	°C

NOTE 2: All unused inputs of the device must be held at V_{CC} or GND to ensure proper device operation. Refer to the TI application report, *Implications of Slow or Floating CMOS Inputs*, literature number SCBA004.

electrical characteristics over recommended operating free-air temperature range (unless otherwise noted)

PARAMETER	TEST CONDITIONS		V_{CC}	T_A = 25°C			SN54HC257, SN54HC258		SN74HC257, SN74HC258		UNIT
				MIN	TYP	MAX	MIN	MAX	MIN	MAX	
V_{OH}	$V_I = V_{IH}$ or V_{IL}	I_{OH} = −20 µA	2 V	1.9	1.998		1.9		1.9		V
			4.5 V	4.4	4.499		4.4		4.4		
			6 V	5.9	5.999		5.9		5.9		
		I_{OH} = −6 mA	4.5 V	3.98	4.3		3.7		3.84		
		I_{OH} = −7.8 mA	6 V	5.48	5.8		5.2		5.34		
V_{OL}	$V_I = V_{IH}$ or V_{IL}	I_{OL} = 20 µA	2 V		0.002	0.1		0.1		0.1	V
			4.5 V		0.001	0.1		0.1		0.1	
			6 V		0.001	0.1		0.1		0.1	
		I_{OL} = 6 mA	4.5 V		0.17	0.26		0.4		0.33	
		I_{OL} = 7.8 mA	6 V		0.15	0.26		0.4		0.33	
I_I	$V_I = V_{CC}$ or 0		6 V		±0.1	±100		±1000		±1000	nA
I_{OZ}	$V_O = V_{CC}$ or 0		6 V		±0.01	±0.5		±10		±5	µA
I_{CC}	$V_I = V_{CC}$ or 0,	I_O = 0	6 V			8		160		80	µA
C_i			2 V to 6 V		3	10		10		10	pF

switching characteristics over recommended operating free-air temperature range, C_L = 50 pF (unless otherwise noted) (see Figure 1)

PARAMETER	FROM (INPUT)	TO (OUTPUT)	V_{CC}	T_A = 25°C			SN54HC257		SN74HC257		UNIT
				MIN	TYP	MAX	MIN	MAX	MIN	MAX	
t_{pd}	A or B	Any Y	2 V		50	100		150		125	ns
			4.5 V		10	20		30		25	
			6 V		9	17		25		21	
	$\overline{A}$/B	Any Y	2 V		50	100		150		125	
			4.5 V		10	20		30		25	
			6 V		9	17		25		21	
t_{en}	$\overline{G}$	Any Y	2 V		75	150		225		190	ns
			4.5 V		15	30		45		38	
			6 V		13	26		38		32	
t_{dis}	$\overline{G}$	Any Y	2 V		75	150		225		190	ns
			4.5 V		15	30		45		38	
			6 V		13	26		38		32	
t_t		Any Y	2 V		28	60		90		75	ns
			4.5 V		8	12		18		15	
			6 V		6	10		15		13	

switching characteristics over recommended operating free-air temperature range, C_L = 150 pF (unless otherwise noted) (see Figure 1)

PARAMETER	FROM (INPUT)	TO (OUTPUT)	V_{CC}	T_A = 25°C			SN54HC257		SN74HC257		UNIT
				MIN	TYP	MAX	MIN	MAX	MIN	MAX	
t_{pd}	A or B	Any Y	2 V		75	150		245		190	ns
			4.5 V		15	30		45		38	
			6 V		13	26		38		32	
	$\overline{A}$/B	Any Y	2 V		75	150		245		190	
			4.5 V		15	30		45		38	
			6 V		13	26		38		32	
t_{en}	$\overline{G}$	Any Y	2 V		100	200		300		250	ns
			4.5 V		24	40		60		50	
			6 V		18	34		51		43	
t_t		Any Y	2 V		45	210		315		265	ns
			4.5 V		17	42		63		53	
			6 V		13	36		53		45	

switching characteristics over recommended operating free-air temperature range, C_L = 50 pF (unless otherwise noted) (see Figure 1)

PARAMETER	FROM (INPUT)	TO (OUTPUT)	V_{CC}	T_A = 25°C			SN54HC258		SN74HC258		UNIT
				MIN	TYP	MAX	MIN	MAX	MIN	MAX	
t_{pd}	A or B	Any Y	2 V		60	100		150		125	ns
			4.5 V		13	20		30		25	
			6 V		12	17		25		21	
	$\overline{A}$/B	Any Y	2 V		60	115		175		145	
			4.5 V		13	23		35		29	
			6 V		12	20		30		25	
t_{en}	$\overline{G}$	Any Y	2 V		70	150		225		190	ns
			4.5 V		15	30		45		38	
			6 V		13	26		38		32	
t_{dis}	$\overline{G}$	Any Y	2 V		75	150		225		190	ns
			4.5 V		15	30		45		38	
			6 V		13	26		38		32	
t_t		Any Y	2 V		28	60		90		75	ns
			4.5 V		8	12		18		15	
			6 V		6	10		15		13	

switching characteristics over recommended operating free-air temperature range, C_L = 150 pF (unless otherwise noted) (see Figure 1)

PARAMETER	FROM (INPUT)	TO (OUTPUT)	V_{CC}	T_A = 25°C			SN54HC258		SN74HC258		UNIT
				MIN	TYP	MAX	MIN	MAX	MIN	MAX	
t_{pd}	A or B	Any Y	2 V		95	150		245		190	ns
			4.5 V		23	30		45		38	
			6 V		21	26		38		32	
	$\overline{A}$/B	Any Y	2 V		95	165		240		210	
			4.5 V		23	33		48		42	
			6 V		21	28		41		36	
t_{en}	$\overline{G}$	Any Y	2 V		100	200		300		250	ns
			4.5 V		24	40		60		50	
			6 V		18	34		51		43	
t_t		Any Y	2 V		45	210		315		265	ns
			4.5 V		17	42		63		53	
			6 V		13	36		53		45	

operating characteristics, T_A = 25°C

PARAMETER		TEST CONDITIONS	TYP	UNIT
C_{pd}	Power dissipation capacitance per multiplexer	No load	40	pF

PARAMETER MEASUREMENT INFORMATION

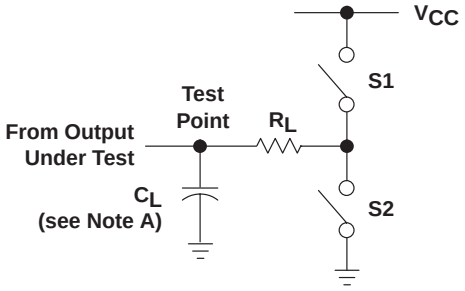

LOAD CIRCUIT

PARAMETER		R_L	C_L	S1	S2
t_{en}	t_{PZH}	1 kΩ	50 pF or 150 pF	Open	Closed
	t_{PZL}			Closed	Open
t_{dis}	t_{PHZ}	1 kΩ	50 pF	Open	Closed
	t_{PLZ}			Closed	Open
t_{pd} or t_t		−−	50 pF or 150 pF	Open	Open

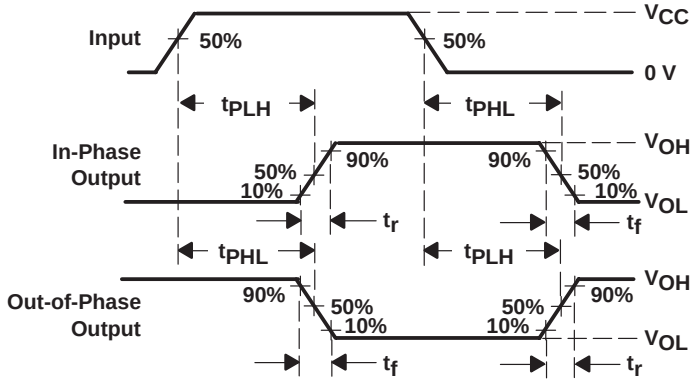

VOLTAGE WAVEFORMS
PROPAGATION DELAY AND OUTPUT TRANSITION TIMES

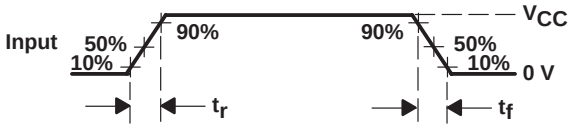

VOLTAGE WAVEFORM
INPUT RISE AND FALL TIMES

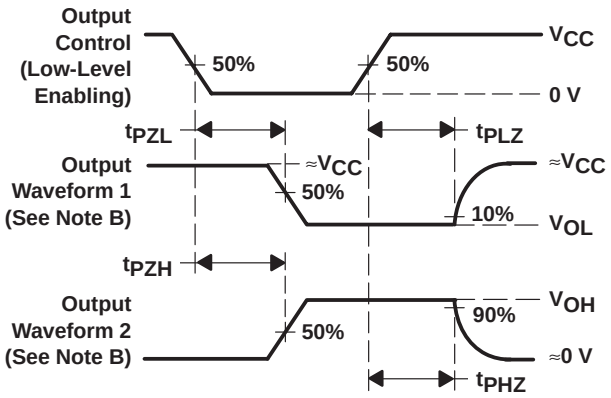

VOLTAGE WAVEFORMS
ENABLE AND DISABLE TIMES FOR 3-STATE OUTPUTS

NOTES: A. C_L includes probe and test-fixture capacitance.
B. Waveform 1 is for an output with internal conditions such that the output is low except when disabled by the output control. Waveform 2 is for an output with internal conditions such that the output is high except when disabled by the output control.
C. Phase relationships between waveforms were chosen arbitrarily. All input pulses are supplied by generators having the following characteristics: PRR ≤ 1 MHz, Z_O = 50 Ω, t_r = 6 ns, t_f = 6 ns.
D. The outputs are measured one at a time with one input transition per measurement.
E. t_{PLZ} and t_{PHZ} are the same as t_{dis}.
F. t_{PZL} and t_{PZH} are the same as t_{en}.
G. t_{PLH} and t_{PHL} are the same as t_{pd}.

Figure 1. Load Circuit and Voltage Waveforms

PACKAGING INFORMATION

Orderable Device	Status (1)	Package Type	Package Drawing	Pins	Package Qty	Eco Plan (2)	Lead finish/ Ball material (6)	MSL Peak Temp (3)	Op Temp (°C)	Device Marking (4/5)	Samples
85124012A	ACTIVE	LCCC	FK	20	1	Non-RoHS & Green	SNPB	N / A for Pkg Type	-55 to 125	85124012A SNJ54HC 257FK	Samples
8512401EA	ACTIVE	CDIP	J	16	1	Non-RoHS & Green	SNPB	N / A for Pkg Type	-55 to 125	8512401EA SNJ54HC257J	Samples
SN54HC257J	ACTIVE	CDIP	J	16	1	Non-RoHS & Green	SNPB	N / A for Pkg Type	-55 to 125	SN54HC257J	Samples
SN74HC257D	ACTIVE	SOIC	D	16	40	RoHS & Green	NIPDAU	Level-1-260C-UNLIM	-40 to 85	HC257	Samples
SN74HC257DG4	ACTIVE	SOIC	D	16	40	RoHS & Green	NIPDAU	Level-1-260C-UNLIM	-40 to 85	HC257	Samples
SN74HC257DR	ACTIVE	SOIC	D	16	2500	RoHS & Green	NIPDAU	Level-1-260C-UNLIM	-40 to 85	HC257	Samples
SN74HC257DT	ACTIVE	SOIC	D	16	250	RoHS & Green	NIPDAU	Level-1-260C-UNLIM	-40 to 85	HC257	Samples
SN74HC257N	ACTIVE	PDIP	N	16	25	RoHS & Green	NIPDAU	N / A for Pkg Type	-40 to 85	SN74HC257N	Samples
SN74HC257NE4	ACTIVE	PDIP	N	16	25	RoHS & Green	NIPDAU	N / A for Pkg Type	-40 to 85	SN74HC257N	Samples
SN74HC257NSR	ACTIVE	SO	NS	16	2000	RoHS & Green	NIPDAU	Level-1-260C-UNLIM	-40 to 85	HC257	Samples
SN74HC257PW	ACTIVE	TSSOP	PW	16	90	RoHS & Green	NIPDAU	Level-1-260C-UNLIM	-40 to 85	HC257	Samples
SN74HC257PWR	ACTIVE	TSSOP	PW	16	2000	RoHS & Green	NIPDAU	Level-1-260C-UNLIM	-40 to 85	HC257	Samples
SN74HC258D	ACTIVE	SOIC	D	16	40	RoHS & Green	NIPDAU	Level-1-260C-UNLIM	-40 to 85	HC258	Samples
SN74HC258DR	ACTIVE	SOIC	D	16	2500	RoHS & Green	NIPDAU	Level-1-260C-UNLIM	-40 to 85	HC258	Samples
SN74HC258N	ACTIVE	PDIP	N	16	25	RoHS & Green	NIPDAU	N / A for Pkg Type	-40 to 85	SN74HC258N	Samples
SN74HC258NSR	ACTIVE	SO	NS	16	2000	RoHS & Green	NIPDAU	Level-1-260C-UNLIM	-40 to 85	HC258	Samples
SN74HC258PW	ACTIVE	TSSOP	PW	16	90	RoHS & Green	NIPDAU	Level-1-260C-UNLIM	-40 to 85	HC258	Samples
SN74HC258PWR	ACTIVE	TSSOP	PW	16	2000	RoHS & Green	NIPDAU	Level-1-260C-UNLIM	-40 to 85	HC258	Samples
SNJ54HC257FK	ACTIVE	LCCC	FK	20	1	Non-RoHS & Green	SNPB	N / A for Pkg Type	-55 to 125	85124012A SNJ54HC	Samples

Orderable Device	Status (1)	Package Type	Package Drawing	Pins	Package Qty	Eco Plan (2)	Lead finish/ Ball material (6)	MSL Peak Temp (3)	Op Temp (°C)	Device Marking (4/5)	Samples
										257FK	
SNJ54HC257J	ACTIVE	CDIP	J	16	1	Non-RoHS & Green	SNPB	N / A for Pkg Type	-55 to 125	8512401EA SNJ54HC257J	Samples

(1) The marketing status values are defined as follows:
ACTIVE: Product device recommended for new designs.
LIFEBUY: TI has announced that the device will be discontinued, and a lifetime-buy period is in effect.
NRND: Not recommended for new designs. Device is in production to support existing customers, but TI does not recommend using this part in a new design.
PREVIEW: Device has been announced but is not in production. Samples may or may not be available.
OBSOLETE: TI has discontinued the production of the device.

(2) **RoHS:** TI defines "RoHS" to mean semiconductor products that are compliant with the current EU RoHS requirements for all 10 RoHS substances, including the requirement that RoHS substance do not exceed 0.1% by weight in homogeneous materials. Where designed to be soldered at high temperatures, "RoHS" products are suitable for use in specified lead-free processes. TI may reference these types of products as "Pb-Free".
RoHS Exempt: TI defines "RoHS Exempt" to mean products that contain lead but are compliant with EU RoHS pursuant to a specific EU RoHS exemption.
Green: TI defines "Green" to mean the content of Chlorine (Cl) and Bromine (Br) based flame retardants meet JS709B low halogen requirements of <=1000ppm threshold. Antimony trioxide based flame retardants must also meet the <=1000ppm threshold requirement.

(3) MSL, Peak Temp. - The Moisture Sensitivity Level rating according to the JEDEC industry standard classifications, and peak solder temperature.

(4) There may be additional marking, which relates to the logo, the lot trace code information, or the environmental category on the device.

(5) Multiple Device Markings will be inside parentheses. Only one Device Marking contained in parentheses and separated by a "~" will appear on a device. If a line is indented then it is a continuation of the previous line and the two combined represent the entire Device Marking for that device.

(6) Lead finish/Ball material - Orderable Devices may have multiple material finish options. Finish options are separated by a vertical ruled line. Lead finish/Ball material values may wrap to two lines if the finish value exceeds the maximum column width.

Important Information and Disclaimer: The information provided on this page represents TI's knowledge and belief as of the date that it is provided. TI bases its knowledge and belief on information provided by third parties, and makes no representation or warranty as to the accuracy of such information. Efforts are underway to better integrate information from third parties. TI has taken and continues to take reasonable steps to provide representative and accurate information but may not have conducted destructive testing or chemical analysis on incoming materials and chemicals. TI and TI suppliers consider certain information to be proprietary, and thus CAS numbers and other limited information may not be available for release.

In no event shall TI's liability arising out of such information exceed the total purchase price of the TI part(s) at issue in this document sold by TI to Customer on an annual basis.

OTHER QUALIFIED VERSIONS OF SN54HC257, SN74HC257 :

- Catalog : SN74HC257
- Military : SN54HC257

NOTE: Qualified Version Definitions:

- Catalog - TI's standard catalog product
- Military - QML certified for Military and Defense Applications

TAPE AND REEL INFORMATION

REEL DIMENSIONS

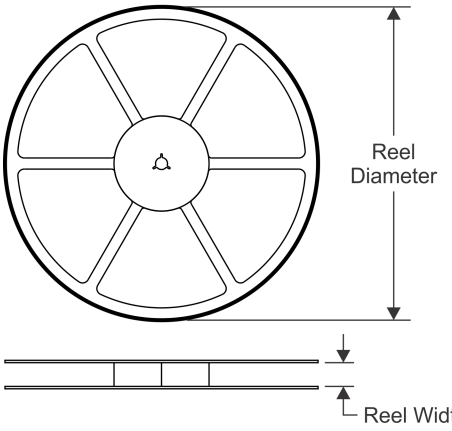

TAPE DIMENSIONS

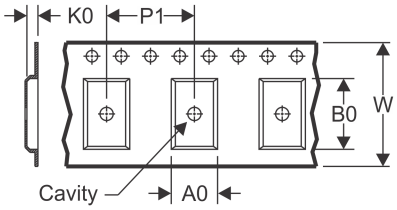

A0	Dimension designed to accommodate the component width
B0	Dimension designed to accommodate the component length
K0	Dimension designed to accommodate the component thickness
W	Overall width of the carrier tape
P1	Pitch between successive cavity centers

QUADRANT ASSIGNMENTS FOR PIN 1 ORIENTATION IN TAPE

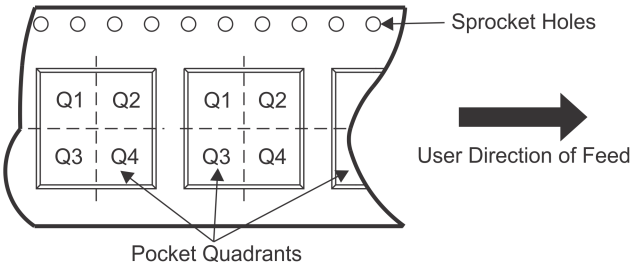

*All dimensions are nominal

Device	Package Type	Package Drawing	Pins	SPQ	Reel Diameter (mm)	Reel Width W1 (mm)	A0 (mm)	B0 (mm)	K0 (mm)	P1 (mm)	W (mm)	Pin1 Quadrant
SN74HC257DR	SOIC	D	16	2500	330.0	16.4	6.5	10.3	2.1	8.0	16.0	Q1
SN74HC257NSR	SO	NS	16	2000	330.0	16.4	8.2	10.5	2.5	12.0	16.0	Q1
SN74HC257PWR	TSSOP	PW	16	2000	330.0	12.4	6.9	5.6	1.6	8.0	12.0	Q1
SN74HC258DR	SOIC	D	16	2500	330.0	16.4	6.5	10.3	2.1	8.0	16.0	Q1
SN74HC258NSR	SO	NS	16	2000	330.0	16.4	8.2	10.5	2.5	12.0	16.0	Q1
SN74HC258PWR	TSSOP	PW	16	2000	330.0	12.4	6.9	5.6	1.6	8.0	12.0	Q1

TAPE AND REEL BOX DIMENSIONS

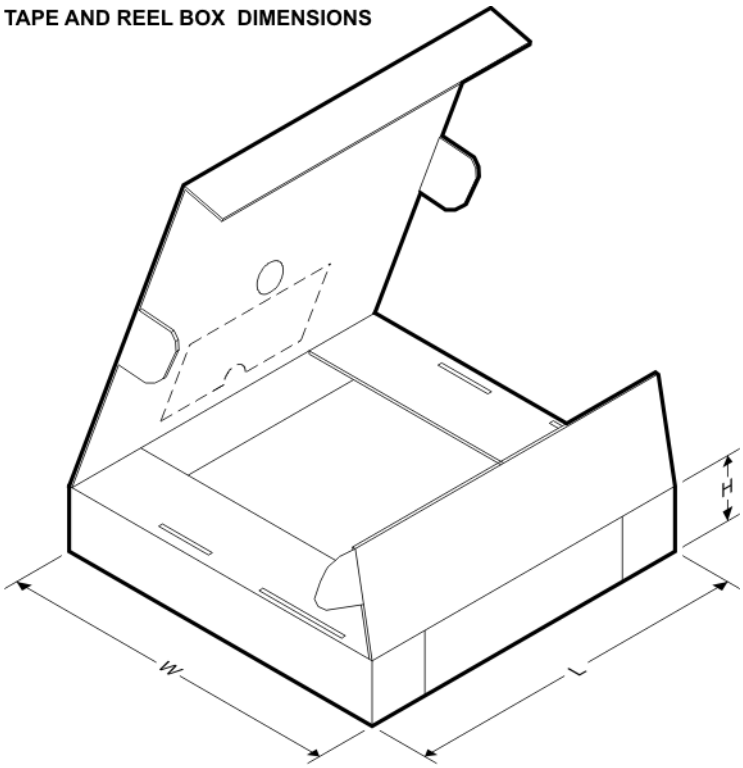

*All dimensions are nominal

Device	Package Type	Package Drawing	Pins	SPQ	Length (mm)	Width (mm)	Height (mm)
SN74HC257DR	SOIC	D	16	2500	340.5	336.1	32.0
SN74HC257NSR	SO	NS	16	2000	853.0	449.0	35.0
SN74HC257PWR	TSSOP	PW	16	2000	853.0	449.0	35.0
SN74HC258DR	SOIC	D	16	2500	340.5	336.1	32.0
SN74HC258NSR	SO	NS	16	2000	853.0	449.0	35.0
SN74HC258PWR	TSSOP	PW	16	2000	853.0	449.0	35.0

TUBE

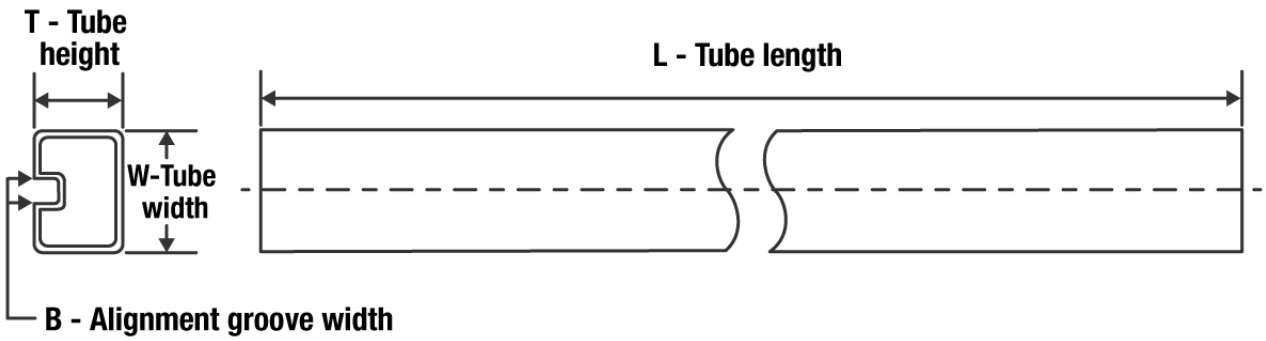

*All dimensions are nominal

Device	Package Name	Package Type	Pins	SPQ	L (mm)	W (mm)	T (µm)	B (mm)
85124012A	FK	LCCC	20	1	506.98	12.06	2030	NA
SN74HC257D	D	SOIC	16	40	507	8	3940	4.32
SN74HC257DG4	D	SOIC	16	40	507	8	3940	4.32
SN74HC257N	N	PDIP	16	25	506	13.97	11230	4.32
SN74HC257N	N	PDIP	16	25	506	13.97	11230	4.32
SN74HC257NE4	N	PDIP	16	25	506	13.97	11230	4.32
SN74HC257NE4	N	PDIP	16	25	506	13.97	11230	4.32
SN74HC257PW	PW	TSSOP	16	90	530	10.2	3600	3.5
SN74HC258D	D	SOIC	16	40	507	8	3940	4.32
SN74HC258N	N	PDIP	16	25	506	13.97	11230	4.32
SN74HC258N	N	PDIP	16	25	506	13.97	11230	4.32
SN74HC258PW	PW	TSSOP	16	90	530	10.2	3600	3.5
SNJ54HC257FK	FK	LCCC	20	1	506.98	12.06	2030	NA

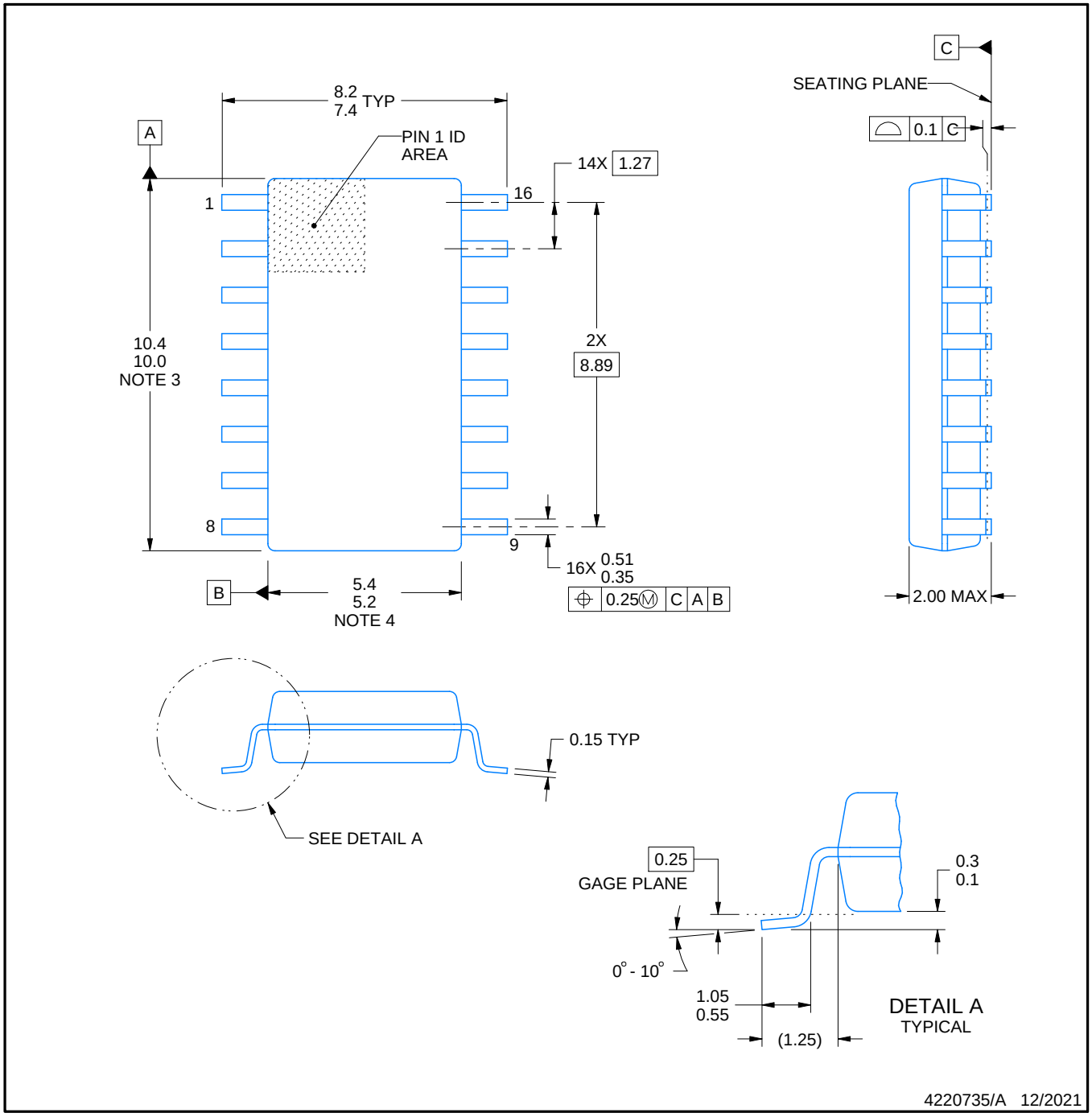

NOTES:

1. All linear dimensions are in millimeters. Dimensions in parenthesis are for reference only. Dimensioning and tolerancing per ASME Y14.5M.
2. This drawing is subject to change without notice.
3. This dimension does not include mold flash, protrusions, or gate burrs. Mold flash, protrusions, or gate burrs shall not exceed 0.15 mm, per side.
4. This dimension does not include interlead flash. Interlead flash shall not exceed 0.25 mm, per side.

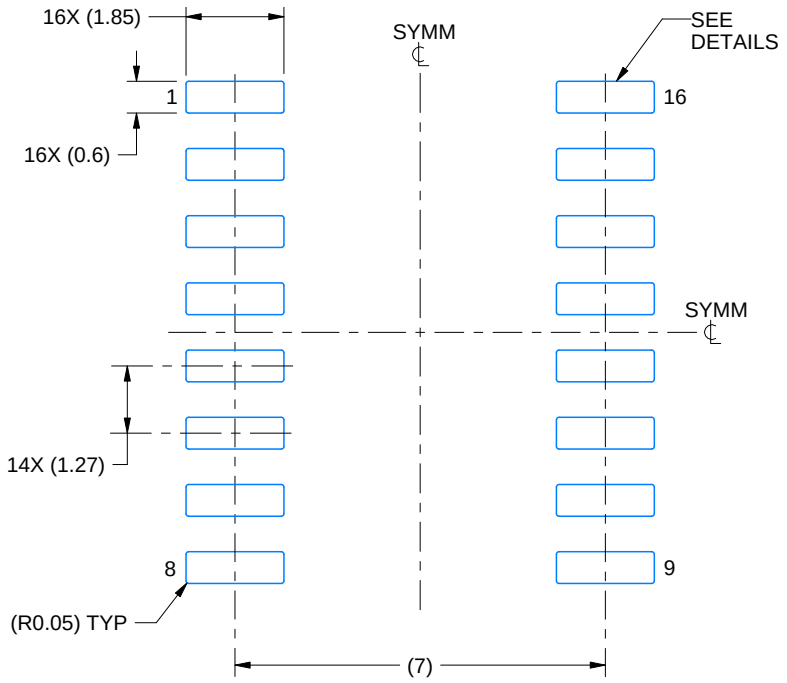

LAND PATTERN EXAMPLE
SCALE:7X

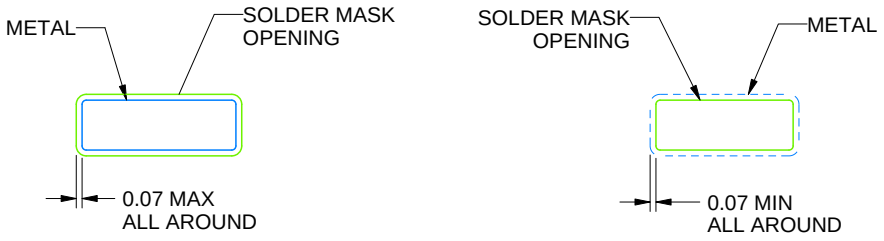

NON SOLDER MASK DEFINED

SOLDER MASK DEFINED

SOLDER MASK DETAILS

4220735/A 12/2021

NOTES: (continued)

5. Publication IPC-7351 may have alternate designs.
6. Solder mask tolerances between and around signal pads can vary based on board fabrication site.

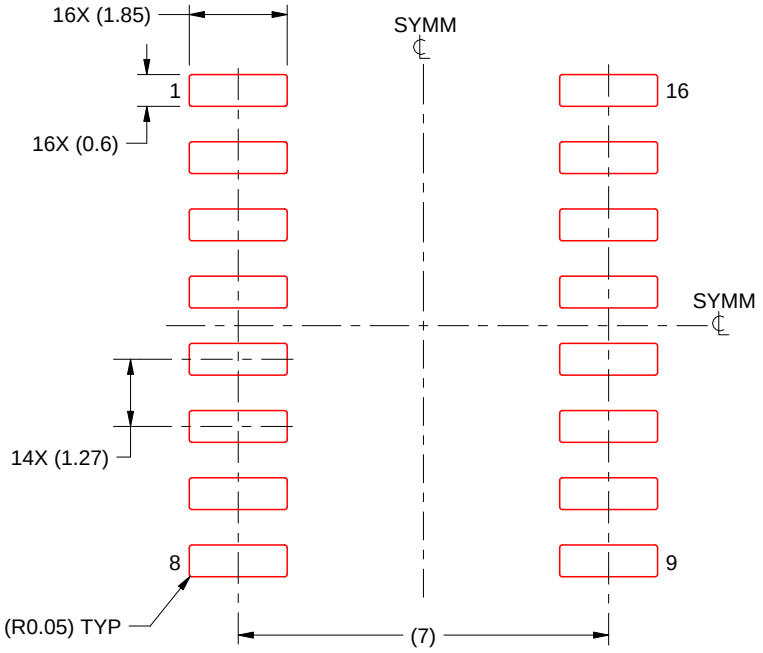

SOLDER PASTE EXAMPLE
BASED ON 0.125 mm THICK STENCIL
SCALE:7X

4220735/A 12/2021

NOTES: (continued)

7. Laser cutting apertures with trapezoidal walls and rounded corners may offer better paste release. IPC-7525 may have alternate design recommendations.
8. Board assembly site may have different recommendations for stencil design.

FK (S–CQCC–N**) LEADLESS CERAMIC CHIP CARRIER

28 TERMINAL SHOWN

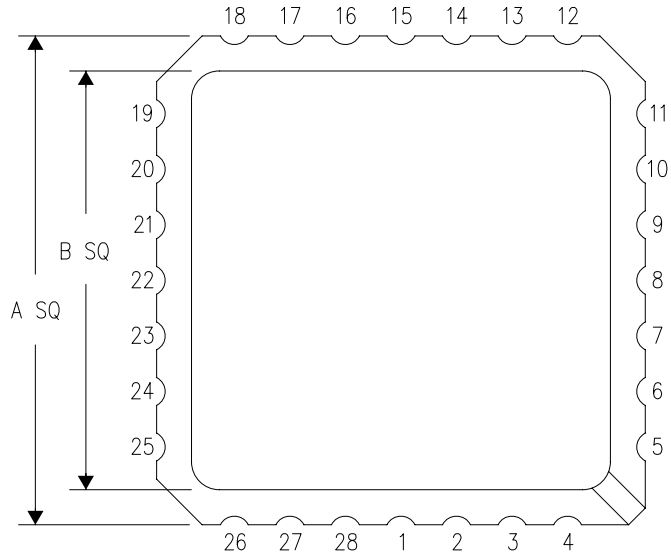

NO. OF TERMINALS **	A		B	
	MIN	MAX	MIN	MAX
20	0.342 (8,69)	0.358 (9,09)	0.307 (7,80)	0.358 (9,09)
28	0.442 (11,23)	0.458 (11,63)	0.406 (10,31)	0.458 (11,63)
44	0.640 (16,26)	0.660 (16,76)	0.495 (12,58)	0.560 (14,22)
52	0.740 (18,78)	0.761 (19,32)	0.495 (12,58)	0.560 (14,22)
68	0.938 (23,83)	0.962 (24,43)	0.850 (21,6)	0.858 (21,8)
84	1.141 (28,99)	1.165 (29,59)	1.047 (26,6)	1.063 (27,0)

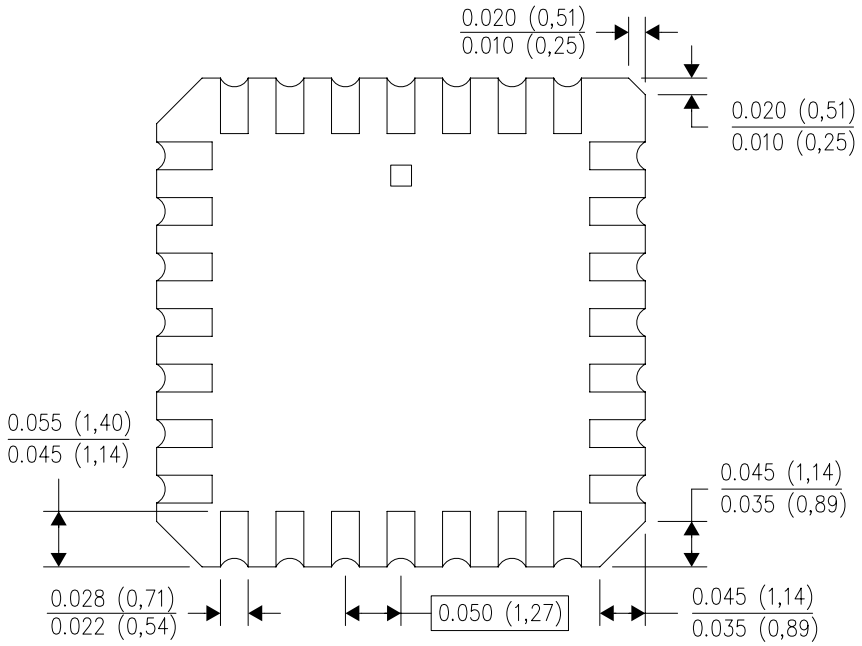

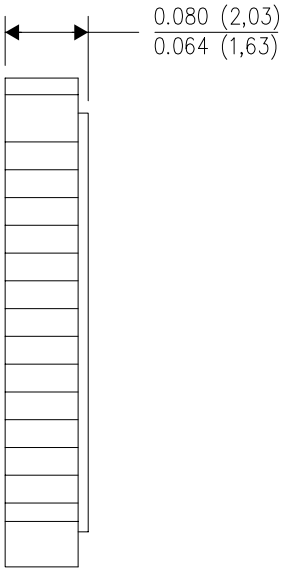

4040140/D 01/11

NOTES:
A. All linear dimensions are in inches (millimeters).
B. This drawing is subject to change without notice.
C. This package can be hermetically sealed with a metal lid.
D. Falls within JEDEC MS–004

D (R–PDSO–G16) PLASTIC SMALL OUTLINE

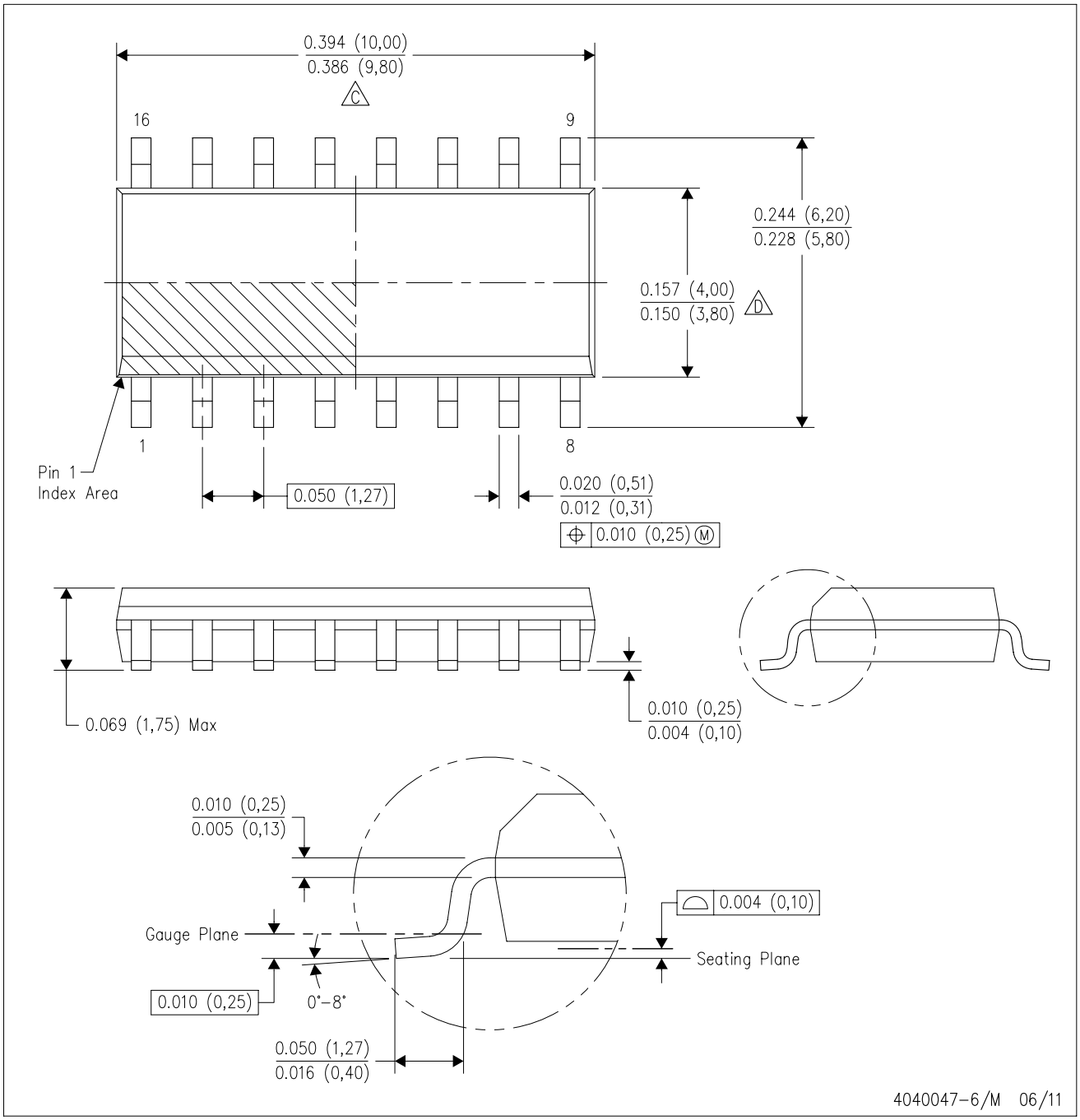

NOTES:
A. All linear dimensions are in inches (millimeters).
B. This drawing is subject to change without notice.
C. Body length does not include mold flash, protrusions, or gate burrs. Mold flash, protrusions, or gate burrs shall not exceed 0.006 (0,15) each side.
D. Body width does not include interlead flash. Interlead flash shall not exceed 0.017 (0,43) each side.
E. Reference JEDEC MS–012 variation AC.

D (R–PDSO–G16) PLASTIC SMALL OUTLINE

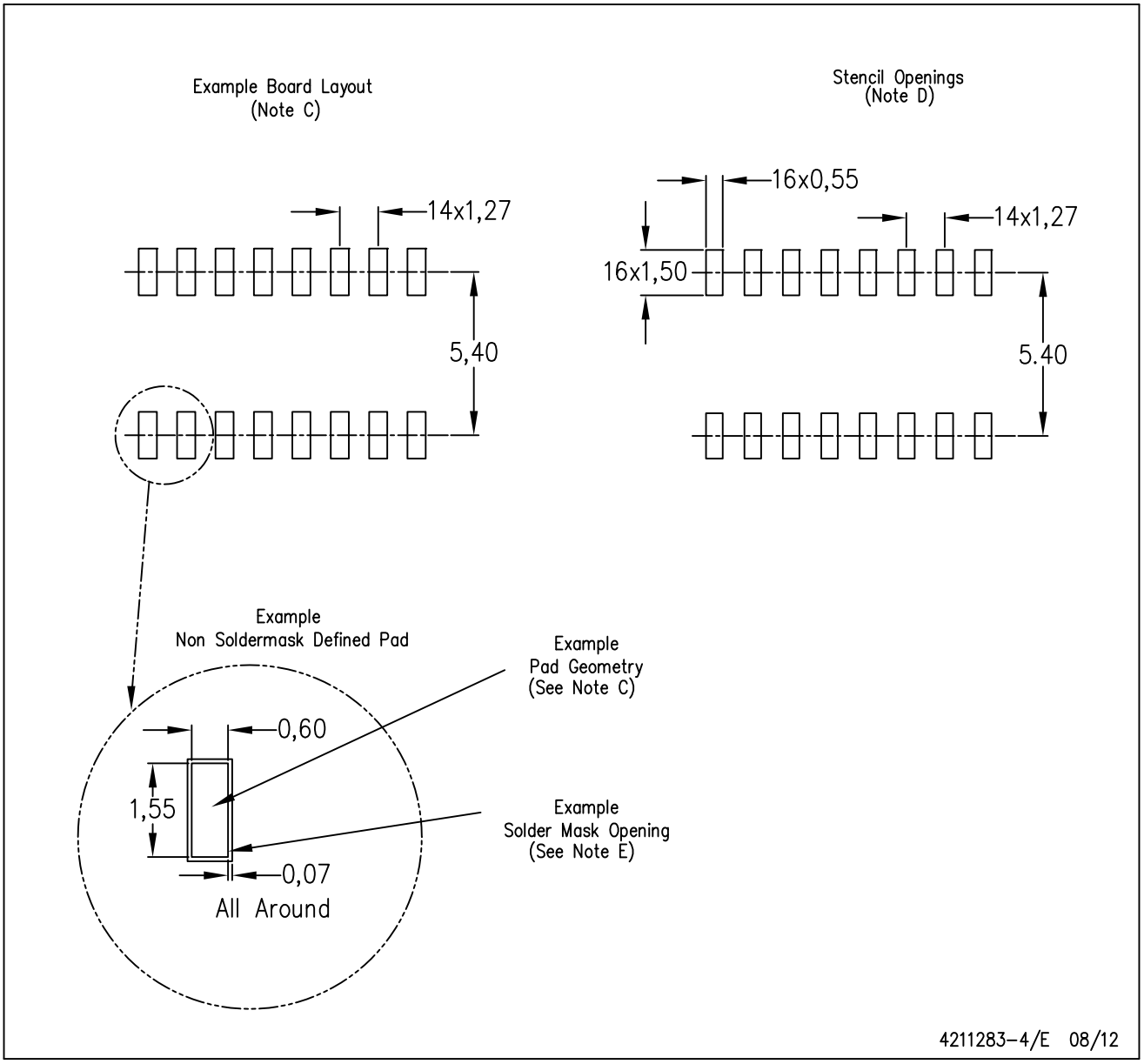

NOTES:
A. All linear dimensions are in millimeters.
B. This drawing is subject to change without notice.
C. Publication IPC–7351 is recommended for alternate designs.
D. Laser cutting apertures with trapezoidal walls and also rounding corners will offer better paste release. Customers should contact their board assembly site for stencil design recommendations. Refer to IPC–7525 for other stencil recommendations.
E. Customers should contact their board fabrication site for solder mask tolerances between and around signal pads.

PW0016A

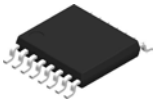

PACKAGE OUTLINE

TSSOP - 1.2 mm max height

SMALL OUTLINE PACKAGE

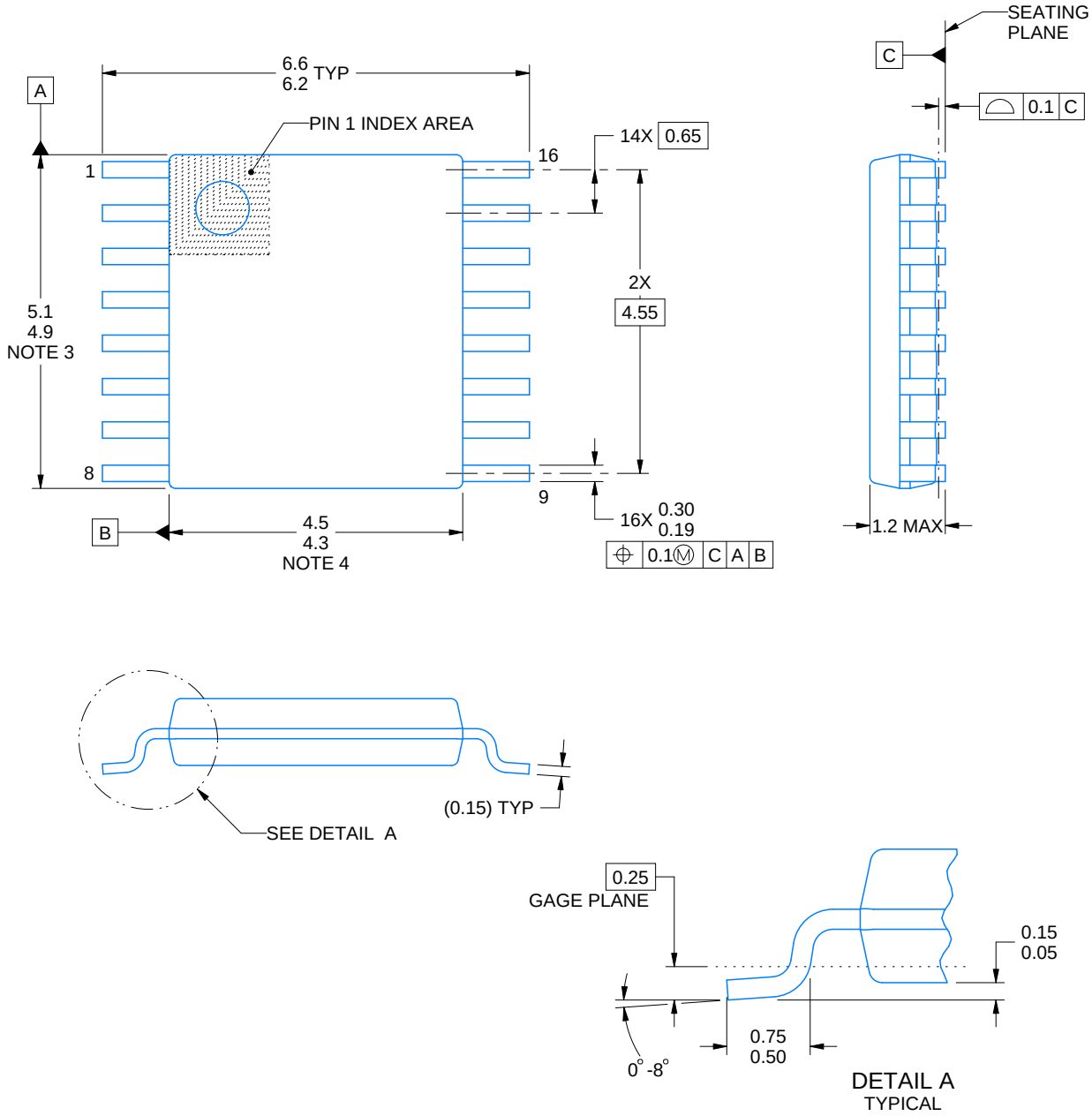

NOTES:

1. All linear dimensions are in millimeters. Any dimensions in parenthesis are for reference only. Dimensioning and tolerancing per ASME Y14.5M.
2. This drawing is subject to change without notice.
3. This dimension does not include mold flash, protrusions, or gate burrs. Mold flash, protrusions, or gate burrs shall not exceed 0.15 mm per side.
4. This dimension does not include interlead flash. Interlead flash shall not exceed 0.25 mm per side.
5. Reference JEDEC registration MO-153.

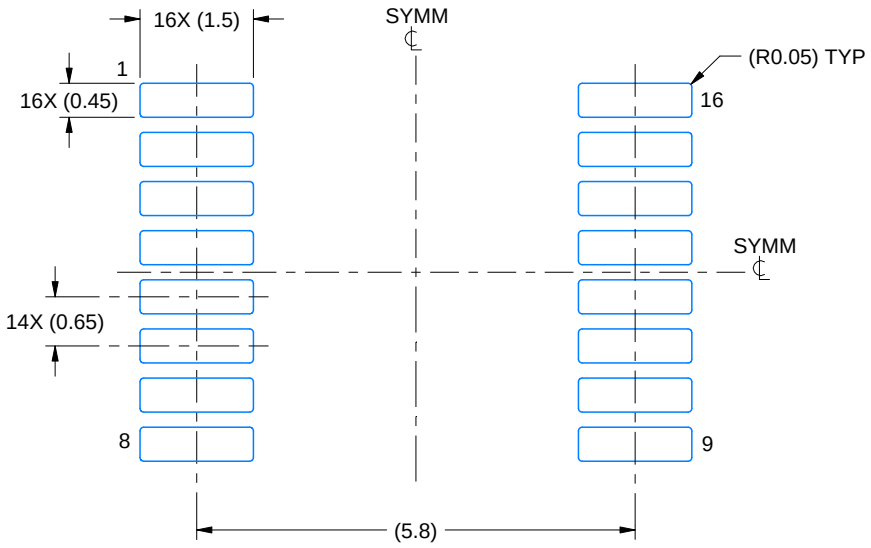

LAND PATTERN EXAMPLE
EXPOSED METAL SHOWN
SCALE: 10X

NON-SOLDER MASK DEFINED (PREFERRED)

SOLDER MASK DEFINED

SOLDER MASK DETAILS

4220204/A 02/2017

NOTES: (continued)

6. Publication IPC-7351 may have alternate designs.
7. Solder mask tolerances between and around signal pads can vary based on board fabrication site.

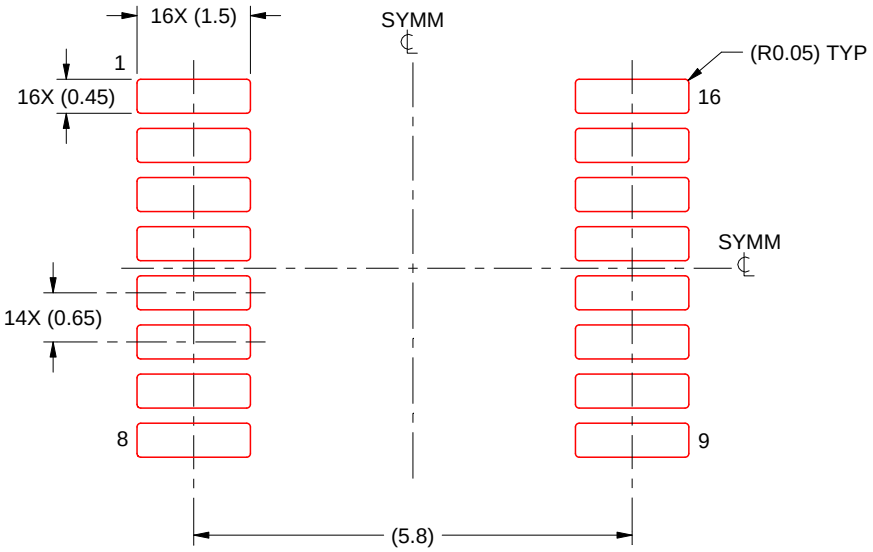

SOLDER PASTE EXAMPLE
BASED ON 0.125 mm THICK STENCIL
SCALE: 10X

4220204/A 02/2017

NOTES: (continued)

8. Laser cutting apertures with trapezoidal walls and rounded corners may offer better paste release. IPC-7525 may have alternate design recommendations.
9. Board assembly site may have different recommendations for stencil design.

MECHANICAL DATA

NS (R-PDSO-G)** **PLASTIC SMALL-OUTLINE PACKAGE**

14-PINS SHOWN

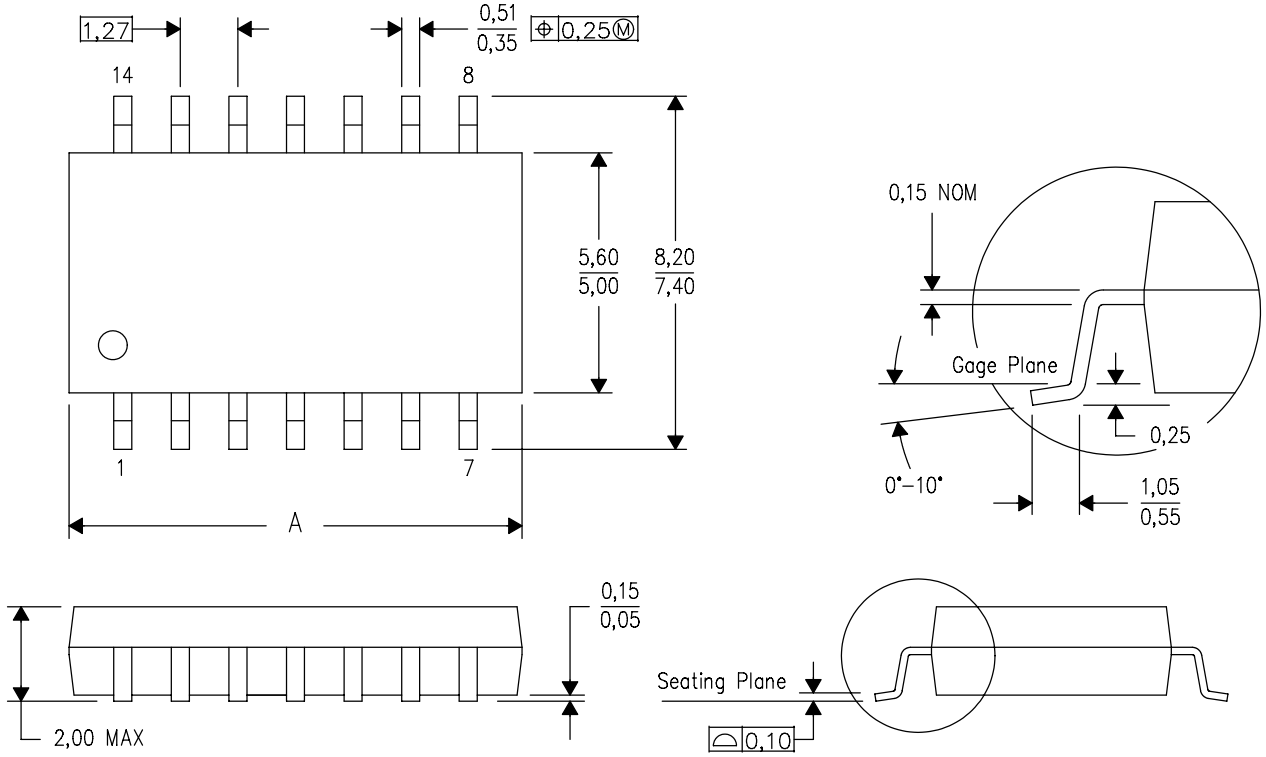

DIM \ PINS **	14	16	20	24
A MAX	10,50	10,50	12,90	15,30
A MIN	9,90	9,90	12,30	14,70

4040062/C 03/03

NOTES:
A. All linear dimensions are in millimeters.
B. This drawing is subject to change without notice.
C. Body dimensions do not include mold flash or protrusion, not to exceed 0,15.

J (R–GDIP–T**) CERAMIC DUAL IN–LINE PACKAGE

14 LEADS SHOWN

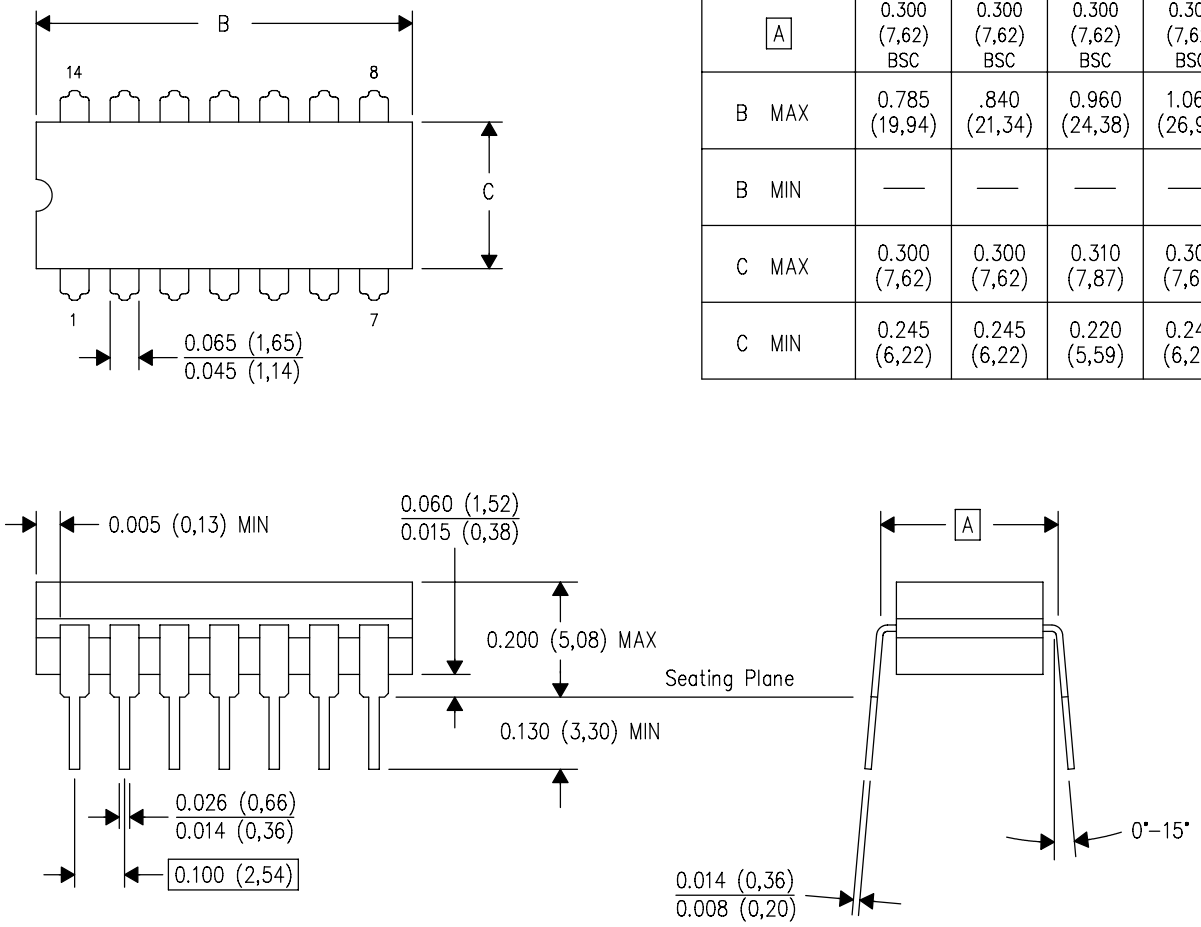

DIM \ PINS **	14	16	18	20
A	0.300 (7,62) BSC	0.300 (7,62) BSC	0.300 (7,62) BSC	0.300 (7,62) BSC
B MAX	0.785 (19,94)	.840 (21,34)	0.960 (24,38)	1.060 (26,92)
B MIN	—	—	—	—
C MAX	0.300 (7,62)	0.300 (7,62)	0.310 (7,87)	0.300 (7,62)
C MIN	0.245 (6,22)	0.245 (6,22)	0.220 (5,59)	0.245 (6,22)

4040083/F 03/03

NOTES:
- A. All linear dimensions are in inches (millimeters).
- B. This drawing is subject to change without notice.
- C. This package is hermetically sealed with a ceramic lid using glass frit.
- D. Index point is provided on cap for terminal identification only on press ceramic glass frit seal only.
- E. Falls within MIL STD 1835 GDIP1–T14, GDIP1–T16, GDIP1–T18 and GDIP1–T20.

N (R–PDIP–T**) PLASTIC DUAL–IN–LINE PACKAGE

16 PINS SHOWN

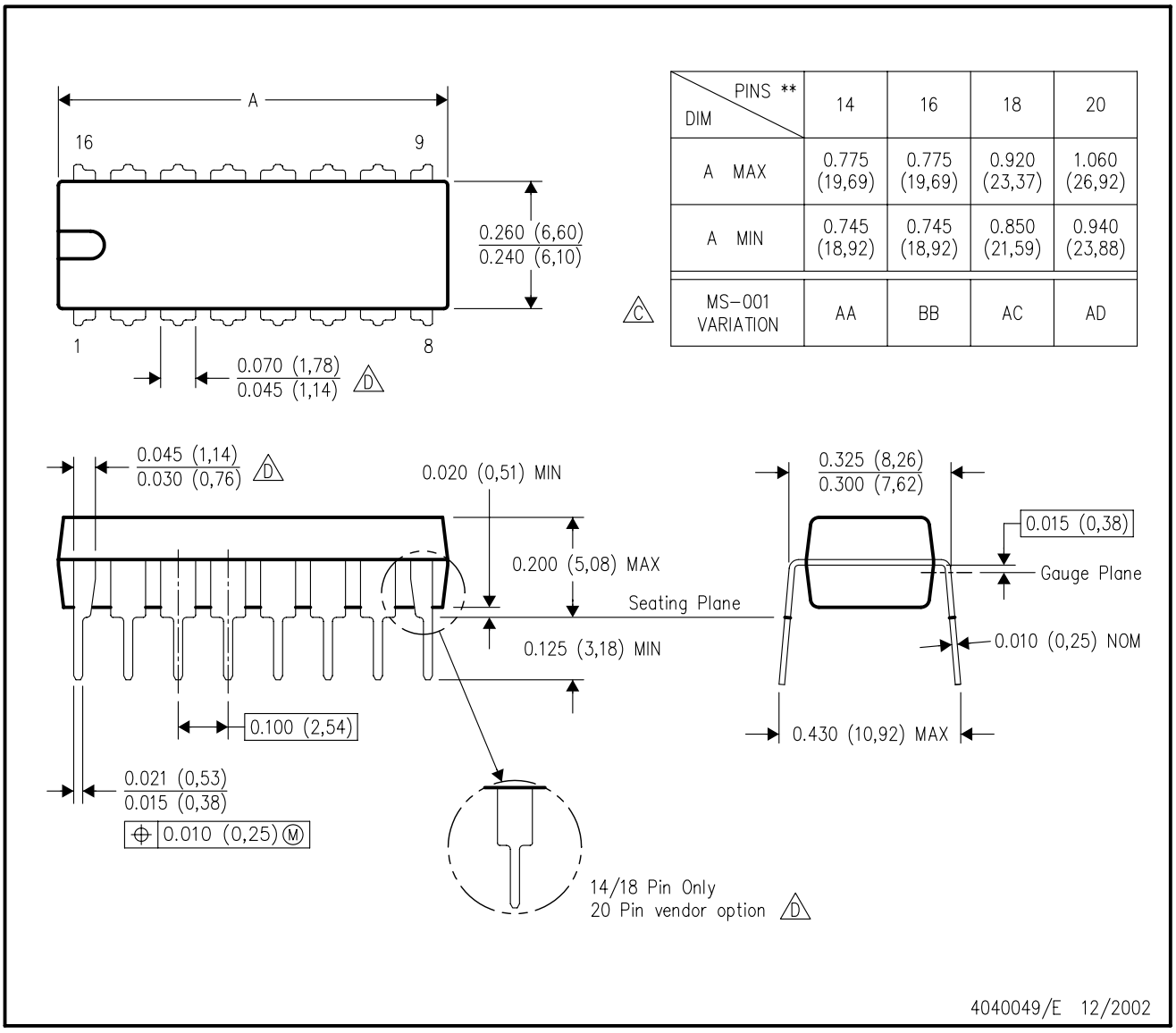

DIM \ PINS **	14	16	18	20
A MAX	0.775 (19,69)	0.775 (19,69)	0.920 (23,37)	1.060 (26,92)
A MIN	0.745 (18,92)	0.745 (18,92)	0.850 (21,59)	0.940 (23,88)
MS–001 VARIATION (C)	AA	BB	AC	AD

NOTES:
A. All linear dimensions are in inches (millimeters).
B. This drawing is subject to change without notice.
C. Falls within JEDEC MS–001, except 18 and 20 pin minimum body length (Dim A).
D. The 20 pin end lead shoulder width is a vendor option, either half or full width.

IMPORTANT NOTICE AND DISCLAIMER

TI PROVIDES TECHNICAL AND RELIABILITY DATA (INCLUDING DATA SHEETS), DESIGN RESOURCES (INCLUDING REFERENCE DESIGNS), APPLICATION OR OTHER DESIGN ADVICE, WEB TOOLS, SAFETY INFORMATION, AND OTHER RESOURCES “AS IS” AND WITH ALL FAULTS, AND DISCLAIMS ALL WARRANTIES, EXPRESS AND IMPLIED, INCLUDING WITHOUT LIMITATION ANY IMPLIED WARRANTIES OF MERCHANTABILITY, FITNESS FOR A PARTICULAR PURPOSE OR NON-INFRINGEMENT OF THIRD PARTY INTELLECTUAL PROPERTY RIGHTS.

These resources are intended for skilled developers designing with TI products. You are solely responsible for (1) selecting the appropriate TI products for your application, (2) designing, validating and testing your application, and (3) ensuring your application meets applicable standards, and any other safety, security, regulatory or other requirements.

These resources are subject to change without notice. TI grants you permission to use these resources only for development of an application that uses the TI products described in the resource. Other reproduction and display of these resources is prohibited. No license is granted to any other TI intellectual property right or to any third party intellectual property right. TI disclaims responsibility for, and you will fully indemnify TI and its representatives against, any claims, damages, costs, losses, and liabilities arising out of your use of these resources.

TI’s products are provided subject to TI’s Terms of Sale or other applicable terms available either on ti.com or provided in conjunction with such TI products. TI’s provision of these resources does not expand or otherwise alter TI’s applicable warranties or warranty disclaimers for TI products.

TI objects to and rejects any additional or different terms you may have proposed.

Mailing Address: Texas Instruments, Post Office Box 655303, Dallas, Texas 75265
Copyright © 2022, Texas Instruments Incorporated