SNx4HC541 Octal Buffers and Line Drivers With 3-State Outputs

1 Features

- Wide Operating Voltage Range of 2 V to 6 V
- High-Current 3-State Outputs Drive Bus Lines Directly or Up to 15 LSTTL Loads
- Low Power Consumption, 80-µA Maximum I_{CC}
- Typical t_{pd} = 10 ns
- ±6-mA Output Drive at 5 V
- Low Input Current of 1 µA Maximum
- Data Flow-Through Pinout (All Inputs on Opposite Side From Outputs)

2 Applications

- LEDs
- Servers
- PCs and Notebooks
- Wearable Health and Wellness Devices
- Electronic Points of Sale

3 Description

These octal buffers and line drivers feature the performance of the SNx4HC541 devices and a pinout with inputs and outputs on opposite sides of the package. This arrangement greatly facilitates printed circuit board layout.

The 3-state outputs are controlled by a two-input NOR gate. If either output-enable ($\overline{OE1}$ or $\overline{OE2}$) input is high, all eight outputs are in the high-impedance state. The SNx4HC541 devices provide true data at the outputs.

Device Information(1)

PART NUMBER	PACKAGE	BODY SIZE (NOM)
SN74HC541DW	SOIC (20)	12.80 mm × 7.50 mm
SN74HC541DB	SSOP (20)	7.20 mm × 5.30 mm
SN74HC541N	PDIP (20)	24.33 mm × 6.35 mm
SN74HC541NS	SO (20)	12.60 mm × 5.30 mm
SN74HC541PW	TSSOP (20)	6.50 mm × 4.40 mm
SN54HC541J	CDIP (20)	24.20 mm × 6.92 mm
SN54HC541FK	LCCC (20)	8.89 mm × 8.89 mm

(1) For all available packages, see the orderable addendum at the end of the data sheet.

Logic Diagram (Positive Logic)

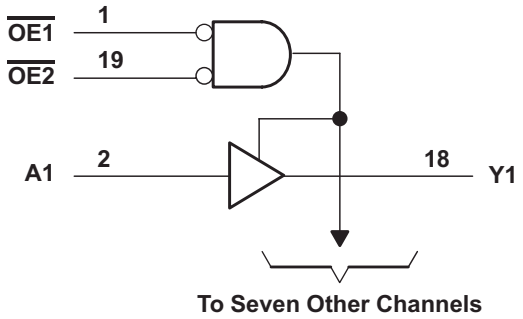

Copyright © 2016, Texas Instruments Incorporated

An IMPORTANT NOTICE at the end of this data sheet addresses availability, warranty, changes, use in safety-critical applications, intellectual property matters and other important disclaimers. PRODUCTION DATA.

On products compliant to MIL-PRF-38535, all parameters are tested unless otherwise noted. On all other products, production processing does not necessarily include testing of all parameters.

Table of Contents

1 Features ... 1
2 Applications ... 1
3 Description ... 1
4 Revision History ... 2
5 Pin Configuration and Functions ... 3
6 Specifications ... 4
6.1 Absolute Maximum Ratings ... 4
6.2 ESD Ratings ... 4
6.3 Recommended Operating Conditions ... 4
6.4 Thermal Information ... 5
6.5 Electrical Characteristics, T_A = 25°C ... 5
6.6 Electrical Characteristics, SN54HC541 ... 5
6.7 Electrical Characteristics, SN74HC541 ... 6
6.8 Switching Characteristics, C_L = 50 pF, T_A = 25°C ... 6
6.9 Switching Characteristics, C_L = 50 pF, SN54HC541 ... 6
6.10 Switching Characteristics, C_L = 50 pF, SN74HC541 ... 7
6.11 Switching Characteristics, C_L = 150 pF, T_A = 25°C ... 7
6.12 Switching Characteristics, C_L = 150 pF, SN54HC541 ... 7
6.13 Switching Characteristics, C_L = 150 pF, SN74HC541 ... 8
6.14 Operating Characteristics ... 8
6.15 Typical Characteristics ... 8
7 Parameter Measurement Information ... 9
8 Detailed Description ... 10
8.1 Overview ... 10
8.2 Functional Block Diagram ... 10
8.3 Feature Description ... 10
8.4 Device Functional Modes ... 10
9 Application and Implementation ... 11
9.1 Application Information ... 11
9.2 Typical Application ... 11
10 Power Supply Recommendations ... 13
11 Layout ... 13
11.1 Layout Guidelines ... 13
11.2 Layout Example ... 13
12 Device and Documentation Support ... 14
12.1 Related Links ... 14
12.2 Receiving Notification of Documentation Updates ... 14
12.3 Community Resources ... 14
12.4 Trademarks ... 14
12.5 Electrostatic Discharge Caution ... 14
12.6 Glossary ... 14
13 Mechanical, Packaging, and Orderable Information ... 14

4 Revision History

NOTE: Page numbers for previous revisions may differ from page numbers in the current version.

Changes from Revision C (August 2003) to Revision D — **Page**

- Added *Applications* section, *Thermal Information* table, *ESD Ratings* table, *Feature Description* section, *Device Functional Modes*, *Application and Implementation* section, *Power Supply Recommendations* section, *Layout* section, *Device and Documentation Support* section, and *Mechanical, Packaging, and Orderable Information* section. ... 1
- Deleted *Ordering Information* table, see *Mechanical, Packaging, and Orderable Information* at the end of the datasheet ... 1
- Changed $R_{\theta JA}$ for DB package from 70°C/W: to 90.2°C/W ... 5
- Changed $R_{\theta JA}$ for DW package from 58°C/W: to 77.5°C/W ... 5
- Changed $R_{\theta JA}$ for N package from 69°C/W: to 45.2°C/W ... 5
- Changed $R_{\theta JA}$ for NS package from 60°C/W: to 72.8°C/W ... 5
- Changed $R_{\theta JA}$ for PW package from 83°C/W: to 98.3°C/W ... 5

Copyright © 1996–2016, Texas Instruments Incorporated

5 Pin Configuration and Functions

DB, DW, N, NS, J, or PW Package
20-Pin SSOP, SOIC, PDIP, SO, CDIP, or TSSOP
Top View

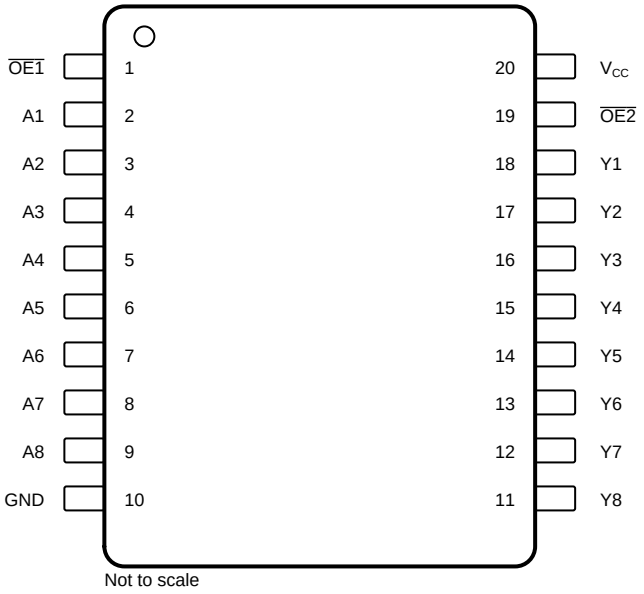

FK Package
20-Pin LCCC
Top View

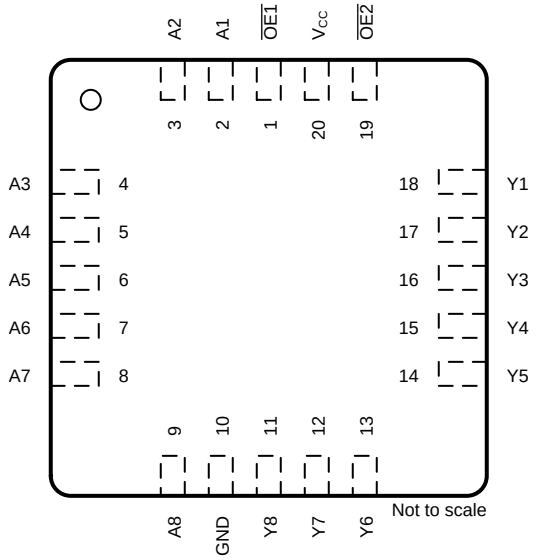

Pin Functions

PIN		I/O	DESCRIPTION
NO.	NAME		
1	$\overline{OE1}$	I	Output enable (active low) Both $\overline{OE}$ must be low to enable outputs
2	A1	I	Channel 1 input
3	A2	I	Channel 2 input
4	A3	I	Channel 3 input
5	A4	I	Channel 4 input
6	A5	I	Channel 5 input
7	A6	I	Channel 6 input
8	A7	I	Channel 7 input
9	A8	I	Channel 8 input
10	GND	—	Ground
11	Y8	O	Channel 8 output
12	Y7	O	Channel 7 output
13	Y6	O	Channel 6 output
14	Y5	O	Channel 5 output
15	Y4	O	Channel 4 output
16	Y3	O	Channel 3 output
17	Y2	O	Channel 2 output
18	Y1	O	Channel 1 output
19	$\overline{OE2}$	I	Output enable (active low) both $\overline{OE}$ must be low to enable outputs
20	V_{CC}	—	Power pin

Copyright © 1996–2016, Texas Instruments Incorporated

6 Specifications

6.1 Absolute Maximum Ratings

over operating free-air temperature range (unless otherwise noted)[1]

			MIN	MAX	UNIT
V_{CC}	Supply voltage		–0.5	7	V
I_{IK}	Input clamp current[2]	$V_I < 0$ or $V_I > V_{CC}$		±20	mA
I_{OK}	Output clamp current[2]	$V_O < 0$ or $V_O > V_{CC}$		±20	mA
I_O	Continuous output current	$V_O = 0$ to V_{CC}		±35	mA
	Continuous current through V_{CC} or GND			±70	mA
T_{stg}	Storage temperature		–65	150	°C

(1) Stresses beyond those listed under *Absolute Maximum Ratings* may cause permanent damage to the device. These are stress ratings only, which do not imply functional operation of the device at these or any other conditions beyond those indicated under *Recommended Operating Conditions*. Exposure to absolute-maximum-rated conditions for extended periods may affect device reliability.
(2) The input and output voltage ratings may be exceeded if the input and output current ratings are observed.

6.2 ESD Ratings

			VALUE	UNIT
$V_{(ESD)}$	Electrostatic discharge	Human-body model (HBM), per ANSI/ESDA/JEDEC JS-001[1]	±2000	V
		Charged-device model (CDM), per JEDEC specification JESD22-C101[2]	±1000	

(1) JEDEC document JEP155 states that 500-V HBM allows safe manufacturing with a standard ESD control process.
(2) JEDEC document JEP157 states that 250-V CDM allows safe manufacturing with a standard ESD control process.

6.3 Recommended Operating Conditions

See note[1]

			MIN	NOM	MAX	UNIT
V_{CC}	Supply voltage		2	5	6	V
V_{IH}	High-level input voltage	$V_{CC} = 2$ V	1.5			V
		$V_{CC} = 4.5$ V	3.15			
		$V_{CC} = 6$ V	4.2			
V_{IL}	Low-level input voltage	$V_{CC} = 2$ V			0.5	V
		$V_{CC} = 4.5$ V			1.35	
		$V_{CC} = 6$ V			1.8	
V_I	Input voltage		0		V_{CC}	V
V_O	Output voltage		0		V_{CC}	V
$\Delta t/\Delta v$	Input transition rise and fall time	$V_{CC} = 2$ V			1000	ns
		$V_{CC} = 4.5$ V			500	
		$V_{CC} = 6$ V			400	
T_A	Operating free-air temperature	SN54HC541	–55		125	°C
		SN74HC541	–40		85	

(1) All unused inputs of the device must be held at V_{CC} or GND to ensure proper device operation. See *Implications of Slow or Floating CMOS Inputs*, SCBA004.

Copyright © 1996–2016, Texas Instruments Incorporated

6.4 Thermal Information

THERMAL METRIC[1]		SN74HC541					UNIT
		DB (SSOP)	DW (SOIC)	N (PDIP)	NS (SO)	PW (TSSOP)	
		20 PINS	20 PINS	20 PINS	20 PINS	20 PINS	
$R_{\theta JA}$	Junction-to-ambient thermal resistance[2]	90.2	77.5	45.2	72.8	98.3	°C/W
$R_{\theta JC(top)}$	Junction-to-case (top) thermal resistance	51.7	42.9	31.3	39.1	33.5	°C/W
$R_{\theta JB}$	Junction-to-board thermal resistance	45.3	45.4	26.1	40.3	49.2	°C/W
ψ_{JT}	Junction-to-top characterization parameter	17.7	16.9	16.8	15.9	2.1	°C/W
ψ_{JB}	Junction-to-board characterization parameter	44.9	44.9	26.0	39.9	48.7	°C/W

(1) For more information about traditional and new thermal metrics, see the *Semiconductor and IC Package Thermal Metrics* application report.
(2) The package thermal impedance is calculated in accordance with JESD 51-7.

6.5 Electrical Characteristics, T_A = 25°C

over operating free-air temperature range (unless otherwise noted)

PARAMETER	TEST CONDITIONS		V_{CC}	MIN	TYP	MAX	UNIT
V_{OH}	$V_I = V_{IH}$ or V_{IL}	I_{OH} = –20 µA	2 V	1.9	1.998		V
			4.5 V	4.4	4.499		
			6 V	5.9	5.999		
		I_{OH} = –6 mA	4.5 V	3.98	4.3		
		I_{OH} = –7.8 mA	6 V	5.48	5.8		
V_{OL}	$V_I = V_{IH}$ or V_{IL}	I_{OL} = 20 µA	2 V	0.002		0.1	V
			4.5 V	0.001		0.1	
			6 V	0.001		0.1	
		I_{OL} = 6 mA	4.5 V	0.17		0.26	
		I_{OL} = 7.8 mA	6 V	0.15		0.26	
I_I	$V_I = V_{CC}$ or 0		6 V	±0.1		±100	nA
I_{OZ}	$V_O = V_{CC}$ or 0		6 V	±0.01		±0.5	µA
I_{CC}	$V_I = V_{CC}$ or 0, I_O = 0		6 V			8	µA
C_i			2 V to 6 V		3	10	pF

6.6 Electrical Characteristics, SN54HC541

over operating free-air temperature range (unless otherwise noted)

PARAMETER	TEST CONDITIONS		V_{CC}	MIN	TYP	MAX	UNIT
V_{OH}	$V_I = V_{IH}$ or V_{IL}	I_{OH} = –20 µA	2 V	1.9			V
			4.5 V	4.4			
			6 V	5.9			
		I_{OH} = –6 mA	4.5 V	3.7			
		I_{OH} = –7.8 mA	6 V	5.2			
V_{OL}	$V_I = V_{IH}$ or V_{IL}	I_{OL} = 20 µA	2 V			0.1	V
			4.5 V			0.1	
			6 V			0.1	
		I_{OL} = 6 mA	4.5 V			0.4	
		I_{OL} = 7.8 mA	6 V			0.4	
I_I	$V_I = V_{CC}$ or 0		6 V			±1000	nA
I_{OZ}	$V_O = V_{CC}$ or 0		6 V			±10	µA
I_{CC}	$V_I = V_{CC}$ or 0, I_O = 0		6 V			160	µA
C_i			2 V to 6 V			10	pF

Copyright © 1996–2016, Texas Instruments Incorporated

6.7 Electrical Characteristics, SN74HC541

over operating free-air temperature range (unless otherwise noted)

PARAMETER	TEST CONDITIONS		V_{CC}	MIN	TYP	MAX	UNIT
V_{OH}	$V_I = V_{IH}$ or V_{IL}	$I_{OH} = -20$ µA	2 V	1.9			V
			4.5 V	4.4			
			6 V	5.9			
		$I_{OH} = -6$ mA	4.5 V	3.84			
		$I_{OH} = -7.8$ mA	6 V	5.34			
V_{OL}	$V_I = V_{IH}$ or V_{IL}	$I_{OL} = 20$ µA	2 V			0.1	V
			4.5 V			0.1	
			6 V			0.1	
		$I_{OL} = 6$ mA	4.5 V			0.33	
		$I_{OL} = 7.8$ mA	6 V			0.33	
I_I	$V_I = V_{CC}$ or 0		6 V			±1000	nA
I_{OZ}	$V_O = V_{CC}$ or 0		6 V			±5	µA
I_{CC}	$V_I = V_{CC}$ or 0, $I_O = 0$		6 V			80	µA
C_i			2 V to 6 V			10	pF

6.8 Switching Characteristics, C_L = 50 pF, T_A = 25°C

over recommended operating free-air temperature range, C_L = 50 pF (unless otherwise noted) (see Figure 3)

PARAMETER	FROM (INPUT)	TO (OUTPUT)	V_{CC}	MIN	TYP	MAX	UNIT
t_{pd}	A	Y	2 V		40	115	ns
			4.5 V		12	23	
			6 V		10	20	
t_{en}	$\overline{OE}$	Y	2 V		80	150	ns
			4.5 V		17	30	
			6 V		15	26	
t_{dis}	$\overline{OE}$	Y	2 V		40	150	ns
			4.5 V		18	30	
			6 V		17	26	
t_t		Y	2 V		28	60	ns
			4.5 V		8	12	
			6 V		6	10	

6.9 Switching Characteristics, C_L = 50 pF, SN54HC541

over recommended operating free-air temperature range, C_L = 50 pF (unless otherwise noted) (see Figure 3)

PARAMETER	FROM (INPUT)	TO (OUTPUT)	V_{CC}	MIN	TYP	MAX	UNIT
t_{pd}	A	Y	2 V			171	ns
			4.5 V			34	
			6 V			29	
t_{en}	$\overline{OE}$	Y	2 V			224	ns
			4.5 V			45	
			6 V			38	
t_{dis}	$\overline{OE}$	Y	2 V			224	ns
			4.5 V			45	
			6 V			38	

Copyright © 1996–2016, Texas Instruments Incorporated

Switching Characteristics, C_L = 50 pF, SN54HC541 (continued)

over recommended operating free-air temperature range, C_L = 50 pF (unless otherwise noted) (see Figure 3)

PARAMETER	FROM (INPUT)	TO (OUTPUT)	V_{CC}	MIN	TYP	MAX	UNIT
t_t		Y	2 V			90	ns
			4.5 V			18	
			6 V			15	

6.10 Switching Characteristics, C_L = 50 pF, SN74HC541

over recommended operating free-air temperature range, C_L = 50 pF (unless otherwise noted) (see Figure 3)

PARAMETER	FROM (INPUT)	TO (OUTPUT)	V_{CC}	MIN	TYP	MAX	UNIT
t_{pd}	A	Y	2 V			144	ns
			4.5 V			29	
			6 V			25	
t_{en}	$\overline{OE}$	Y	2 V			188	ns
			4.5 V			38	
			6 V			32	
t_{dis}	$\overline{OE}$	Y	2 V			188	ns
			4.5 V			38	
			6 V			32	
t_t		Y	2 V			75	ns
			4.5 V			15	
			6 V			13	

6.11 Switching Characteristics, C_L = 150 pF, T_A = 25°C

over recommended operating free-air temperature range, C_L = 150 pF (unless otherwise noted) (see Figure 3)

PARAMETER	FROM (INPUT)	TO (OUTPUT)	V_{CC}	MIN	TYP	MAX	UNIT
t_{pd}	A	Y	2 V		65	165	ns
			4.5 V		16	33	
			6 V		14	28	
t_{en}	$\overline{OE}$	Y	2 V		100	200	ns
			4.5 V		20	40	
			6 V		17	34	
t_t		Y	2 V		45	210	ns
			4.5 V		17	42	
			6 V		13	36	

6.12 Switching Characteristics, C_L = 150 pF, SN54HC541

over recommended operating free-air temperature range, C_L = 150 pF (unless otherwise noted) (see Figure 3)

PARAMETER	FROM (INPUT)	TO (OUTPUT)	V_{CC}	MIN	TYP	MAX	UNIT
t_{pd}	A	Y	2 V			246	ns
			4.5 V			49	
			6 V			42	
t_{en}	$\overline{OE}$	Y	2 V			298	ns
			4.5 V			60	
			6 V			51	

Copyright © 1996–2016, Texas Instruments Incorporated

Switching Characteristics, C_L = 150 pF, SN54HC541 (continued)

over recommended operating free-air temperature range, C_L = 150 pF (unless otherwise noted) (see Figure 3)

PARAMETER	FROM (INPUT)	TO (OUTPUT)	V_{CC}	MIN	TYP	MAX	UNIT
t_t		Y	2 V			315	ns
			4.5 V			63	
			6 V			53	

6.13 Switching Characteristics, C_L = 150 pF, SN74HC541

over recommended operating free-air temperature range, C_L = 150 pF (unless otherwise noted) (see Figure 3)

PARAMETER	FROM (INPUT)	TO (OUTPUT)	V_{CC}	MIN	TYP	MAX	UNIT
t_{pd}	A	Y	2 V			206	ns
			4.5 V			41	
			6 V			35	
t_{en}	$\overline{OE}$	Y	2 V			250	ns
			4.5 V			50	
			6 V			43	
t_t		Y	2 V			265	ns
			4.5 V			53	
			6 V			45	

6.14 Operating Characteristics

T_A = 25°C

PARAMETER		TEST CONDITIONS	TYP	UNIT
C_{pd}	Power dissipation capacitance per buffer/driver	No load	35	pF

6.15 Typical Characteristics

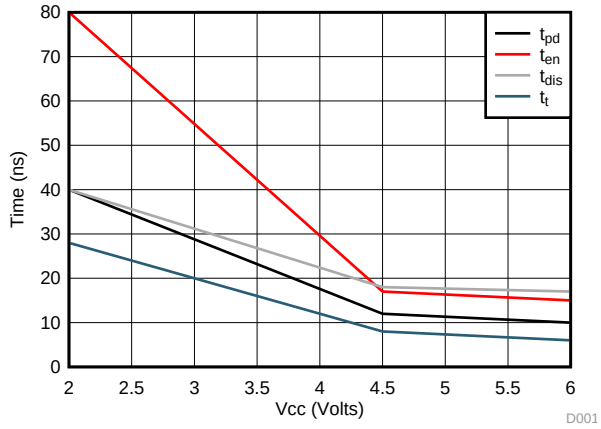

Figure 1. Typical Delay vs. V_{CC} for C_L = 50 pF

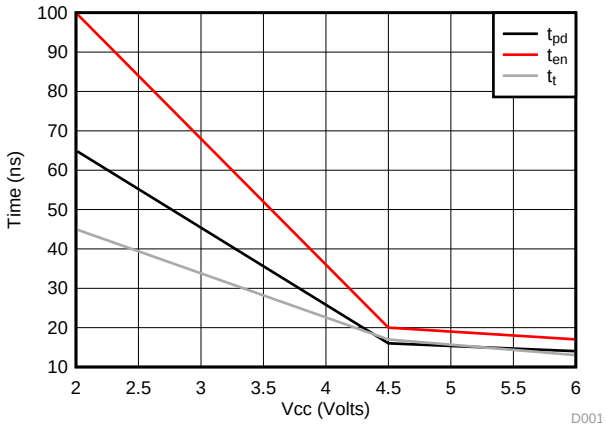

Figure 2. Typical Delay vs. V_{CC} for C_L = 150 pF

Copyright © 1996–2016, Texas Instruments Incorporated

7 Parameter Measurement Information

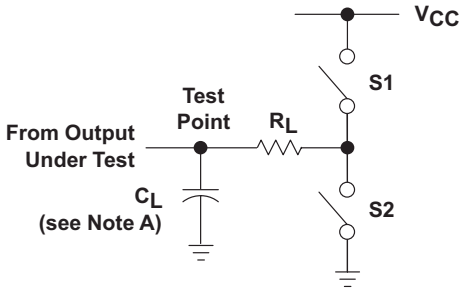

LOAD CIRCUIT

PARAMETER		R_L	C_L	S1	S2
t_{en}	t_{PZH}	1 kΩ	50 pF or 150 pF	Open	Closed
	t_{PZL}			Closed	Open
t_{dis}	t_{PHZ}	1 kΩ	50 pF	Open	Closed
	t_{PLZ}			Closed	Open
t_{pd} or t_t		—	50 pF or 150 pF	Open	Open

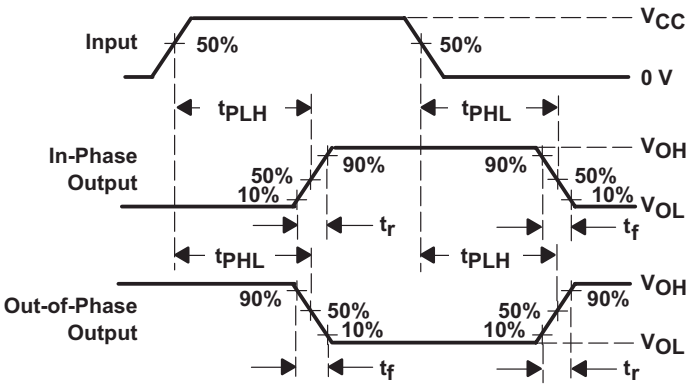

VOLTAGE WAVEFORMS
PROPAGATION DELAY AND OUTPUT TRANSITION TIMES

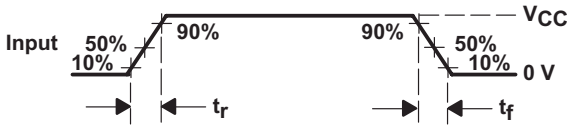

VOLTAGE WAVEFORM
INPUT RISE AND FALL TIMES

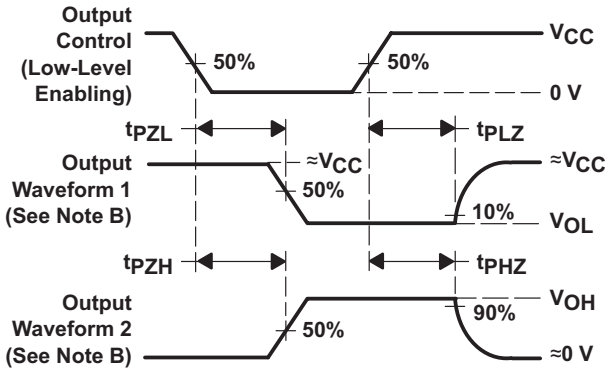

VOLTAGE WAVEFORMS
ENABLE AND DISABLE TIMES FOR 3-STATE OUTPUTS

A. C_L includes probe and test-fixture capacitance.

B. Waveform 1 is for an output with internal conditions such that the output is low except when disabled by the output control.
Waveform 2 is for an output with internal conditions such that the output is high except when disabled by the output control.

C. Phase relationships between waveforms were chosen arbitrarily. All input pulses are supplied by generators having the following characteristics: PRR ≤ 1 MHz, Z_O = 50 Ω, t_r = 6 ns, t_f = 6 ns.

D. The outputs are measured one at a time with one input transition per measurement.

E. t_{PLZ} and t_{PHZ} are the same as t_{dis}.

F. t_{PZL} and t_{PZH} are the same as t_{en}.

G. t_{PLH} and t_{PHL} are the same as t_{pd}.

Figure 3. Load Circuit and Voltage Waveforms

8 Detailed Description

8.1 Overview

The SN74HC541 device has 8 inputs and outputs where data from the A inputs go to the Y outputs. The output enables of the device control whether the information from the A inputs go to the Y outputs. These enable pins cause the device to go into high Z if either $\overline{OE1}$ or $\overline{OE2}$ are high. The $\overline{OE}$s should be tied to V_{CC} through a pull up resistor to ensure the high impedance state during power up or power down; the minimum value of the resistor is determined by the current sinking capability of the driver.

8.2 Functional Block Diagram

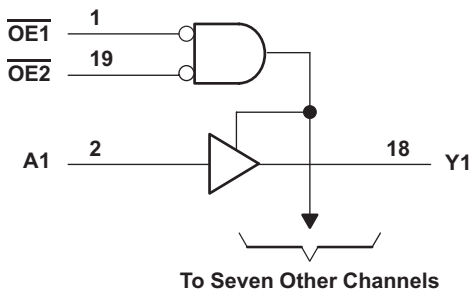

Copyright © 2016, Texas Instruments Incorporated

Figure 4. Logic Diagram (Positive Logic)

8.3 Feature Description

The SNx4HC541 has a wide operating voltage range of 2 V to 6 V. The device has multiple enable pins, and the device pinout enables simple board layout with outputs across from inputs.

8.4 Device Functional Modes

Table 1 lists the functional modes of the SNx4HC541.

Table 1. Function Table (Each Buffer/Driver)

INPUTS			OUTPUT Y
$\overline{OE1}$	$\overline{OE2}$	A	
L	L	L	L
L	L	H	H
H	X	X	Hi-Z
X	H	X	Hi-Z

Copyright © 1996–2016, Texas Instruments Incorporated

9 Application and Implementation

NOTE

Information in the following applications sections is not part of the TI component specification, and TI does not warrant its accuracy or completeness. TI's customers are responsible for determining suitability of components for their purposes. Customers should validate and test their design implementation to confirm system functionality.

9.1 Application Information

SN74HC541 is a wide range CMOS device that can be used over large voltage ranges. The device can be used anywhere from 2 to 6 Volts. The device can drive up to 6 mA of current at 5 Volts. This makes it perfect for driving bus lines directly or up to 15 LSTTL Loads. It can be used to drive anything from micro controllers and system logic devices to LEDs.

9.2 Typical Application

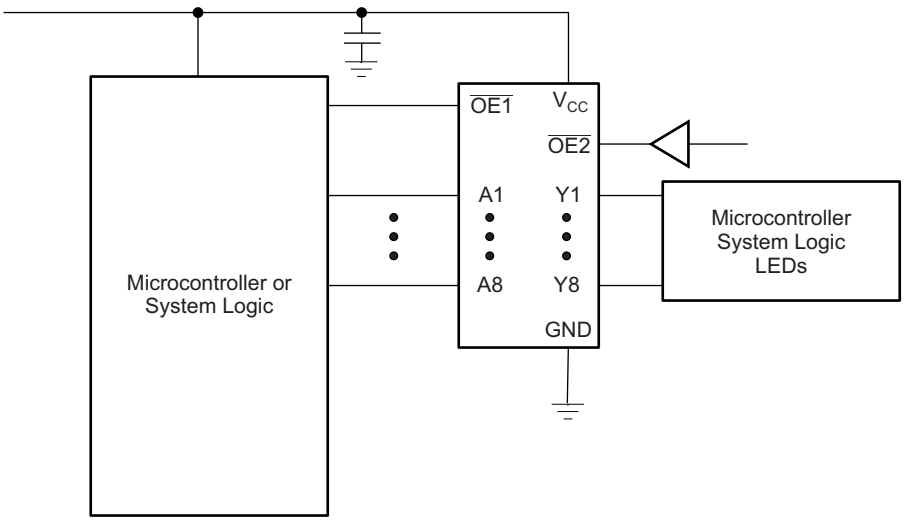

Copyright © 2016, Texas Instruments Incorporated

Figure 5. Typical Application Diagram

9.2.1 Design Requirements

This device uses CMOS technology and has a wide voltage range. Take care to avoid pulling too much current from the outputs as to not exceed 6 mA. Also, take care to not go over V_{CC} voltage to avoid damage to the device.

9.2.2 Detailed Design Procedure

1. Recommended Input Conditions
   - Rise time and fall time specs: See (Δt/ΔV) in the *Recommended Operating Conditions* table.
   - Specified high and low levels: See (VIH and VIL) in the *Recommended Operating Conditions* table.
   - Inputs should not be pulled above V_{CC}.
2. Recommended Output Conditions
   - Load currents should not exceed 6 mA for the part
   - Outputs should not be pulled above V_{CC}.

Typical Application (continued)

9.2.3 Application Curve

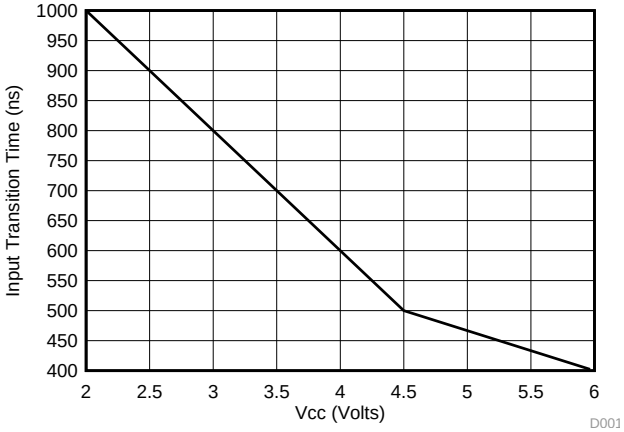

Figure 6. Input Transition Time vs. V_{CC}

Copyright © 1996–2016, Texas Instruments Incorporated

10 Power Supply Recommendations

The power supply can be any voltage between the MIN and MAX supply voltage rating located in the *Recommended Operating Conditions* table.

Each V_{CC} pin should have a good bypass capacitor to prevent power disturbance. For devices with a single supply, 0.1-μF is recommended; if there are multiple V_{CC} pins, then 0.01-μF or 0.022-μF is recommended for each power pin. It is acceptable to parallel multiple bypass caps to reject different frequencies of noise. A 0.1-μF and a 1-μF are commonly used in parallel. The bypass capacitor should be installed as close to the power pin as possible for best results.

11 Layout

11.1 Layout Guidelines

When using multiple bit logic devices inputs should never float.

In many cases, functions or parts of functions of digital logic devices are unused, for example, when only two inputs of a triple-input AND gate are used or only 3 of the 4 buffer gates are used. Such input pins should not be left unconnected because the undefined voltages at the outside connections result in undefined operational states. The *Recommended Operating Conditions* section specifies the rules that must be observed under all circumstances. All unused inputs of digital logic devices must be connected to a high or low bias to prevent them from floating. The logic level that should be applied to any particular unused input depends on the function of the device. Generally they will be tied to GND or V_{CC} whichever makes more sense or is more convenient. It is generally acceptable to float outputs, unless the part is a transceiver. If the transceiver has an output enable pin, it disables the output section of the part when asserted. This does not disable the input section of the I/Os, so they cannot float when disabled.

11.2 Layout Example

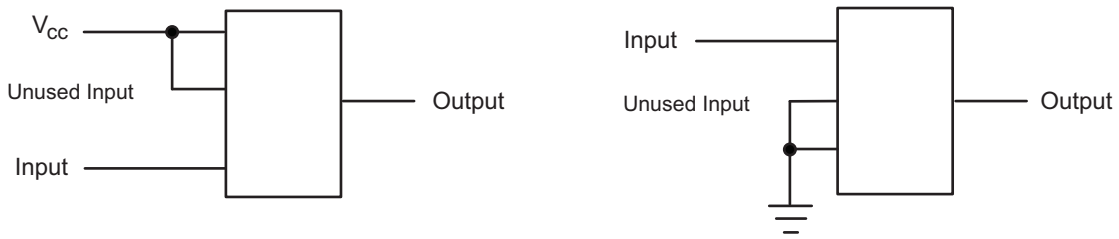

Figure 7. Layout Diagram

12 Device and Documentation Support

12.1 Related Links

The table below lists quick access links. Categories include technical documents, support and community resources, tools and software, and quick access to sample or buy.

Table 2. Related Links

PARTS	PRODUCT FOLDER	SAMPLE & BUY	TECHNICAL DOCUMENTS	TOOLS & SOFTWARE	SUPPORT & COMMUNITY
SN54HC541	Click here	Click here	Click here	Click here	Click here
SN74HC541	Click here	Click here	Click here	Click here	Click here

12.2 Receiving Notification of Documentation Updates

To receive notification of documentation updates, navigate to the device product folder on ti.com. In the upper right corner, click on *Alert me* to register and receive a weekly digest of any product information that has changed. For change details, review the revision history included in any revised document.

12.3 Community Resources

The following links connect to TI community resources. Linked contents are provided "AS IS" by the respective contributors. They do not constitute TI specifications and do not necessarily reflect TI's views; see TI's Terms of Use.

TI E2E™ Online Community ***TI's Engineer-to-Engineer (E2E) Community.*** Created to foster collaboration among engineers. At e2e.ti.com, you can ask questions, share knowledge, explore ideas and help solve problems with fellow engineers.

Design Support ***TI's Design Support*** Quickly find helpful E2E forums along with design support tools and contact information for technical support.

12.4 Trademarks

E2E is a trademark of Texas Instruments.
All other trademarks are the property of their respective owners.

12.5 Electrostatic Discharge Caution

These devices have limited built-in ESD protection. The leads should be shorted together or the device placed in conductive foam during storage or handling to prevent electrostatic damage to the MOS gates.

12.6 Glossary

SLYZ022 — *TI Glossary*.

This glossary lists and explains terms, acronyms, and definitions.

13 Mechanical, Packaging, and Orderable Information

The following pages include mechanical, packaging, and orderable information. This information is the most current data available for the designated devices. This data is subject to change without notice and revision of this document. For browser-based versions of this data sheet, refer to the left-hand navigation.

Copyright © 1996–2016, Texas Instruments Incorporated

PACKAGING INFORMATION

Orderable Device	Status (1)	Package Type	Package Drawing	Pins	Package Qty	Eco Plan (2)	Lead finish/ Ball material (6)	MSL Peak Temp (3)	Op Temp (°C)	Device Marking (4/5)	Samples
JM38510/65711BRA	ACTIVE	CDIP	J	20	1	Non-RoHS & Green	SNPB	N / A for Pkg Type	-55 to 125	JM38510/ 65711BRA	Samples
M38510/65711BRA	ACTIVE	CDIP	J	20	1	Non-RoHS & Green	SNPB	N / A for Pkg Type	-55 to 125	JM38510/ 65711BRA	Samples
SN54HC541J	ACTIVE	CDIP	J	20	1	Non-RoHS & Green	SNPB	N / A for Pkg Type	-55 to 125	SN54HC541J	Samples
SN74HC541DBR	ACTIVE	SSOP	DB	20	2000	RoHS & Green	NIPDAU	Level-1-260C-UNLIM	-40 to 85	HC541	Samples
SN74HC541DW	ACTIVE	SOIC	DW	20	25	RoHS & Green	NIPDAU	Level-1-260C-UNLIM	-40 to 85	HC541	Samples
SN74HC541DWE4	ACTIVE	SOIC	DW	20	25	RoHS & Green	NIPDAU	Level-1-260C-UNLIM	-40 to 85	HC541	Samples
SN74HC541DWG4	ACTIVE	SOIC	DW	20	25	RoHS & Green	NIPDAU	Level-1-260C-UNLIM	-40 to 85	HC541	Samples
SN74HC541DWR	ACTIVE	SOIC	DW	20	2000	RoHS & Green	NIPDAU	Level-1-260C-UNLIM	-40 to 85	HC541	Samples
SN74HC541N	ACTIVE	PDIP	N	20	20	RoHS & Green	NIPDAU	N / A for Pkg Type	-40 to 85	SN74HC541N	Samples
SN74HC541NE4	ACTIVE	PDIP	N	20	20	RoHS & Green	NIPDAU	N / A for Pkg Type	-40 to 85	SN74HC541N	Samples
SN74HC541NSR	ACTIVE	SO	NS	20	2000	RoHS & Green	NIPDAU	Level-1-260C-UNLIM	-40 to 85	HC541	Samples
SN74HC541PW	ACTIVE	TSSOP	PW	20	70	RoHS & Green	NIPDAU	Level-1-260C-UNLIM	-40 to 85	HC541	Samples
SN74HC541PWG4	ACTIVE	TSSOP	PW	20	70	RoHS & Green	NIPDAU	Level-1-260C-UNLIM	-40 to 85	HC541	Samples
SN74HC541PWR	ACTIVE	TSSOP	PW	20	2000	RoHS & Green	NIPDAU	Level-1-260C-UNLIM	-40 to 85	HC541	Samples
SN74HC541PWT	ACTIVE	TSSOP	PW	20	250	RoHS & Green	NIPDAU	Level-1-260C-UNLIM	-40 to 85	HC541	Samples
SNJ54HC541FK	ACTIVE	LCCC	FK	20	1	Non-RoHS & Green	SNPB	N / A for Pkg Type	-55 to 125	SNJ54HC 541FK	Samples
SNJ54HC541J	ACTIVE	CDIP	J	20	1	Non-RoHS & Green	SNPB	N / A for Pkg Type	-55 to 125	SNJ54HC541J	Samples

(1) The marketing status values are defined as follows:
ACTIVE: Product device recommended for new designs.
LIFEBUY: TI has announced that the device will be discontinued, and a lifetime-buy period is in effect.

NRND: Not recommended for new designs. Device is in production to support existing customers, but TI does not recommend using this part in a new design.
PREVIEW: Device has been announced but is not in production. Samples may or may not be available.
OBSOLETE: TI has discontinued the production of the device.

(2) **RoHS:** TI defines "RoHS" to mean semiconductor products that are compliant with the current EU RoHS requirements for all 10 RoHS substances, including the requirement that RoHS substance do not exceed 0.1% by weight in homogeneous materials. Where designed to be soldered at high temperatures, "RoHS" products are suitable for use in specified lead-free processes. TI may reference these types of products as "Pb-Free".
RoHS Exempt: TI defines "RoHS Exempt" to mean products that contain lead but are compliant with EU RoHS pursuant to a specific EU RoHS exemption.
Green: TI defines "Green" to mean the content of Chlorine (Cl) and Bromine (Br) based flame retardants meet JS709B low halogen requirements of <=1000ppm threshold. Antimony trioxide based flame retardants must also meet the <=1000ppm threshold requirement.

(3) MSL, Peak Temp. - The Moisture Sensitivity Level rating according to the JEDEC industry standard classifications, and peak solder temperature.

(4) There may be additional marking, which relates to the logo, the lot trace code information, or the environmental category on the device.

(5) Multiple Device Markings will be inside parentheses. Only one Device Marking contained in parentheses and separated by a "~" will appear on a device. If a line is indented then it is a continuation of the previous line and the two combined represent the entire Device Marking for that device.

(6) Lead finish/Ball material - Orderable Devices may have multiple material finish options. Finish options are separated by a vertical ruled line. Lead finish/Ball material values may wrap to two lines if the finish value exceeds the maximum column width.

Important Information and Disclaimer: The information provided on this page represents TI's knowledge and belief as of the date that it is provided. TI bases its knowledge and belief on information provided by third parties, and makes no representation or warranty as to the accuracy of such information. Efforts are underway to better integrate information from third parties. TI has taken and continues to take reasonable steps to provide representative and accurate information but may not have conducted destructive testing or chemical analysis on incoming materials and chemicals. TI and TI suppliers consider certain information to be proprietary, and thus CAS numbers and other limited information may not be available for release.

In no event shall TI's liability arising out of such information exceed the total purchase price of the TI part(s) at issue in this document sold by TI to Customer on an annual basis.

OTHER QUALIFIED VERSIONS OF SN54HC541, SN74HC541 :

- Catalog : SN74HC541
- Military : SN54HC541

NOTE: Qualified Version Definitions:

- Catalog - TI's standard catalog product

- Military - QML certified for Military and Defense Applications

TAPE AND REEL INFORMATION

REEL DIMENSIONS

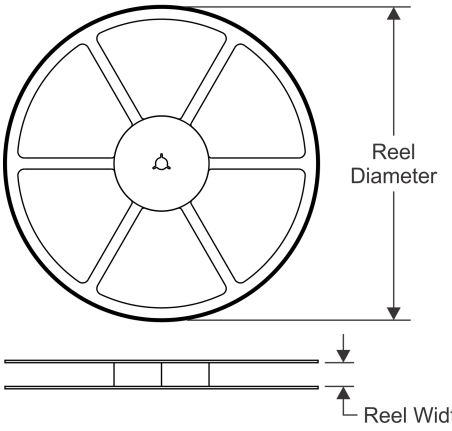

TAPE DIMENSIONS

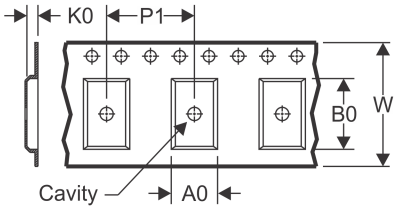

A0	Dimension designed to accommodate the component width
B0	Dimension designed to accommodate the component length
K0	Dimension designed to accommodate the component thickness
W	Overall width of the carrier tape
P1	Pitch between successive cavity centers

QUADRANT ASSIGNMENTS FOR PIN 1 ORIENTATION IN TAPE

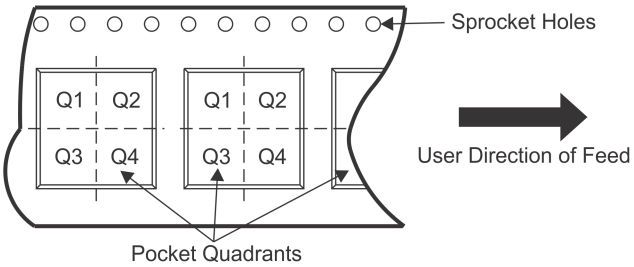

*All dimensions are nominal

Device	Package Type	Package Drawing	Pins	SPQ	Reel Diameter (mm)	Reel Width W1 (mm)	A0 (mm)	B0 (mm)	K0 (mm)	P1 (mm)	W (mm)	Pin1 Quadrant
SN74HC541DBR	SSOP	DB	20	2000	330.0	16.4	8.2	7.5	2.5	12.0	16.0	Q1
SN74HC541DWR	SOIC	DW	20	2000	330.0	24.4	10.9	13.3	2.7	12.0	24.0	Q1
SN74HC541NSR	SO	NS	20	2000	330.0	24.4	8.4	13.0	2.5	12.0	24.0	Q1
SN74HC541PWR	TSSOP	PW	20	2000	330.0	16.4	6.95	7.0	1.4	8.0	16.0	Q1
SN74HC541PWT	TSSOP	PW	20	250	330.0	16.4	6.95	7.1	1.6	8.0	16.0	Q1

TAPE AND REEL BOX DIMENSIONS

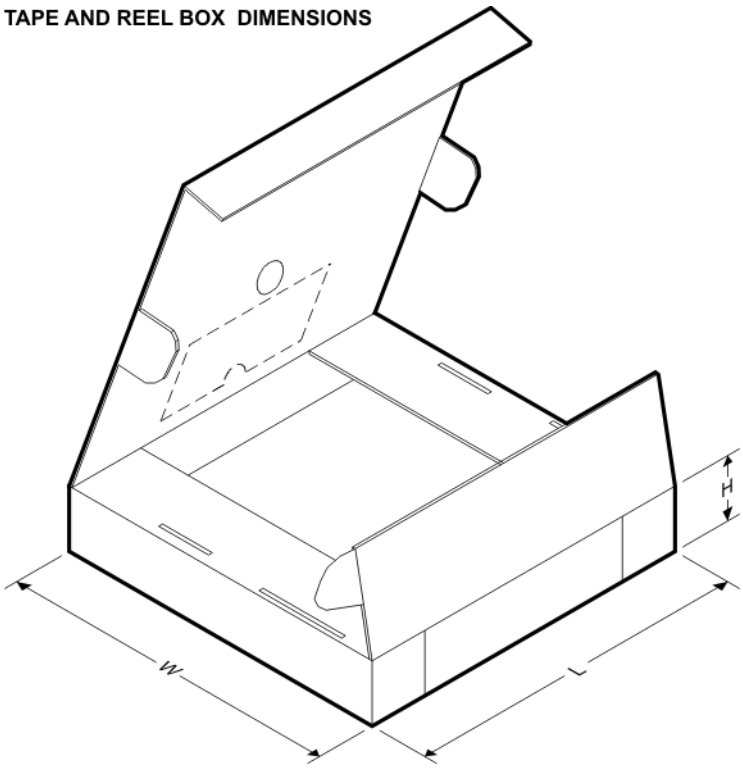

*All dimensions are nominal

Device	Package Type	Package Drawing	Pins	SPQ	Length (mm)	Width (mm)	Height (mm)
SN74HC541DBR	SSOP	DB	20	2000	853.0	449.0	35.0
SN74HC541DWR	SOIC	DW	20	2000	367.0	367.0	45.0
SN74HC541NSR	SO	NS	20	2000	367.0	367.0	45.0
SN74HC541PWR	TSSOP	PW	20	2000	853.0	449.0	35.0
SN74HC541PWT	TSSOP	PW	20	250	853.0	449.0	35.0

TUBE

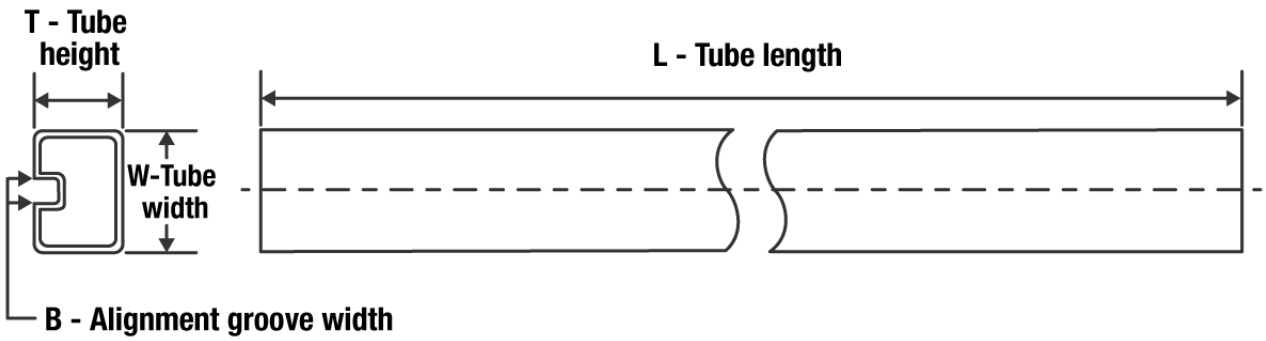

*All dimensions are nominal

Device	Package Name	Package Type	Pins	SPQ	L (mm)	W (mm)	T (µm)	B (mm)
SN74HC541DW	DW	SOIC	20	25	507	12.83	5080	6.6
SN74HC541DWE4	DW	SOIC	20	25	507	12.83	5080	6.6
SN74HC541DWG4	DW	SOIC	20	25	507	12.83	5080	6.6
SN74HC541N	N	PDIP	20	20	506	13.97	11230	4.32
SN74HC541NE4	N	PDIP	20	20	506	13.97	11230	4.32
SN74HC541PW	PW	TSSOP	20	70	530	10.2	3600	3.5
SN74HC541PWG4	PW	TSSOP	20	70	530	10.2	3600	3.5
SNJ54HC541FK	FK	LCCC	20	1	506.98	12.06	2030	NA

N (R–PDIP–T**) PLASTIC DUAL–IN–LINE PACKAGE

16 PINS SHOWN

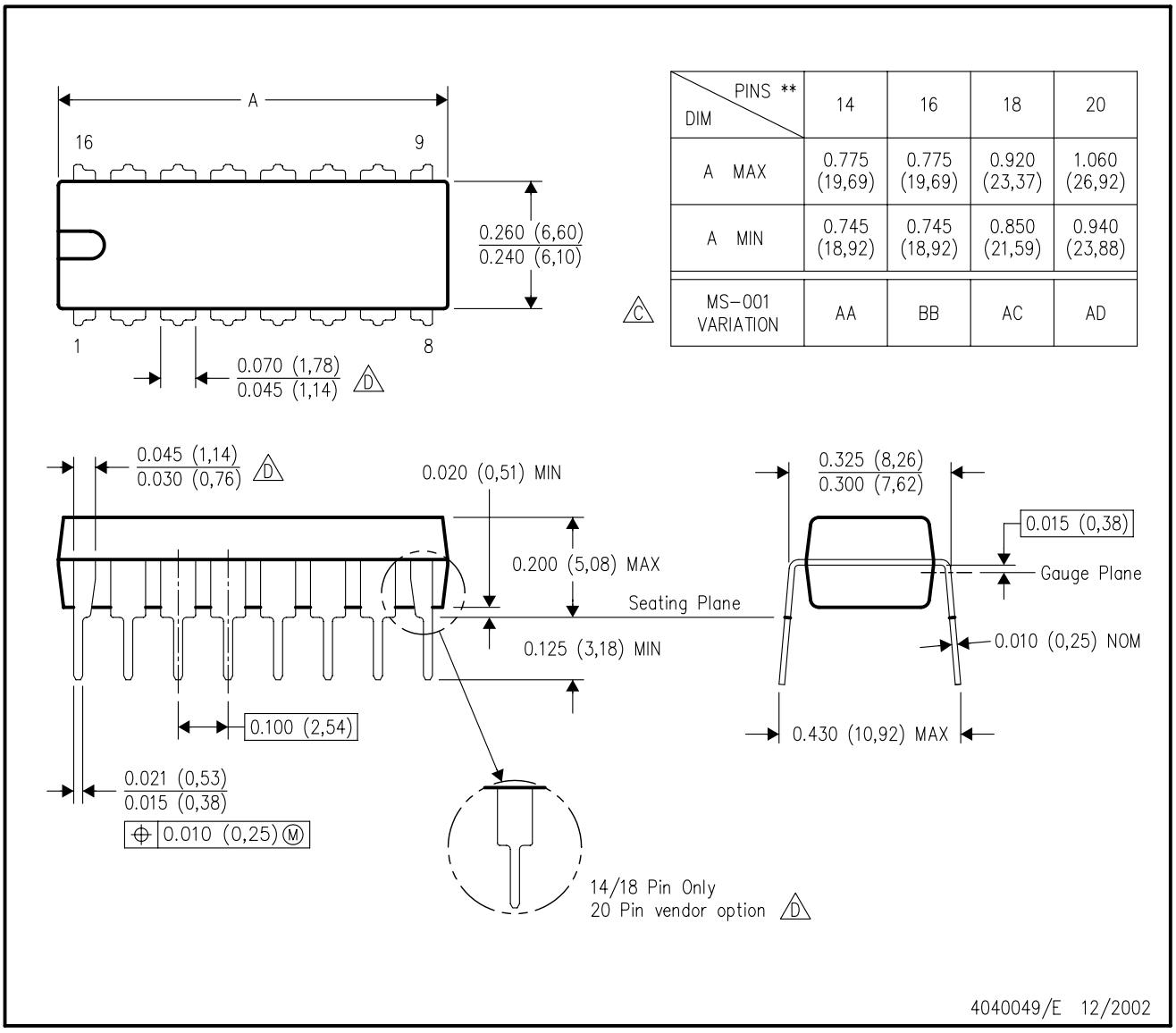

DIM \ PINS **	14	16	18	20
A MAX	0.775 (19,69)	0.775 (19,69)	0.920 (23,37)	1.060 (26,92)
A MIN	0.745 (18,92)	0.745 (18,92)	0.850 (21,59)	0.940 (23,88)
MS–001 VARIATION (C)	AA	BB	AC	AD

NOTES:
A. All linear dimensions are in inches (millimeters).
B. This drawing is subject to change without notice.
C. Falls within JEDEC MS–001, except 18 and 20 pin minimum body length (Dim A).
D. The 20 pin end lead shoulder width is a vendor option, either half or full width.

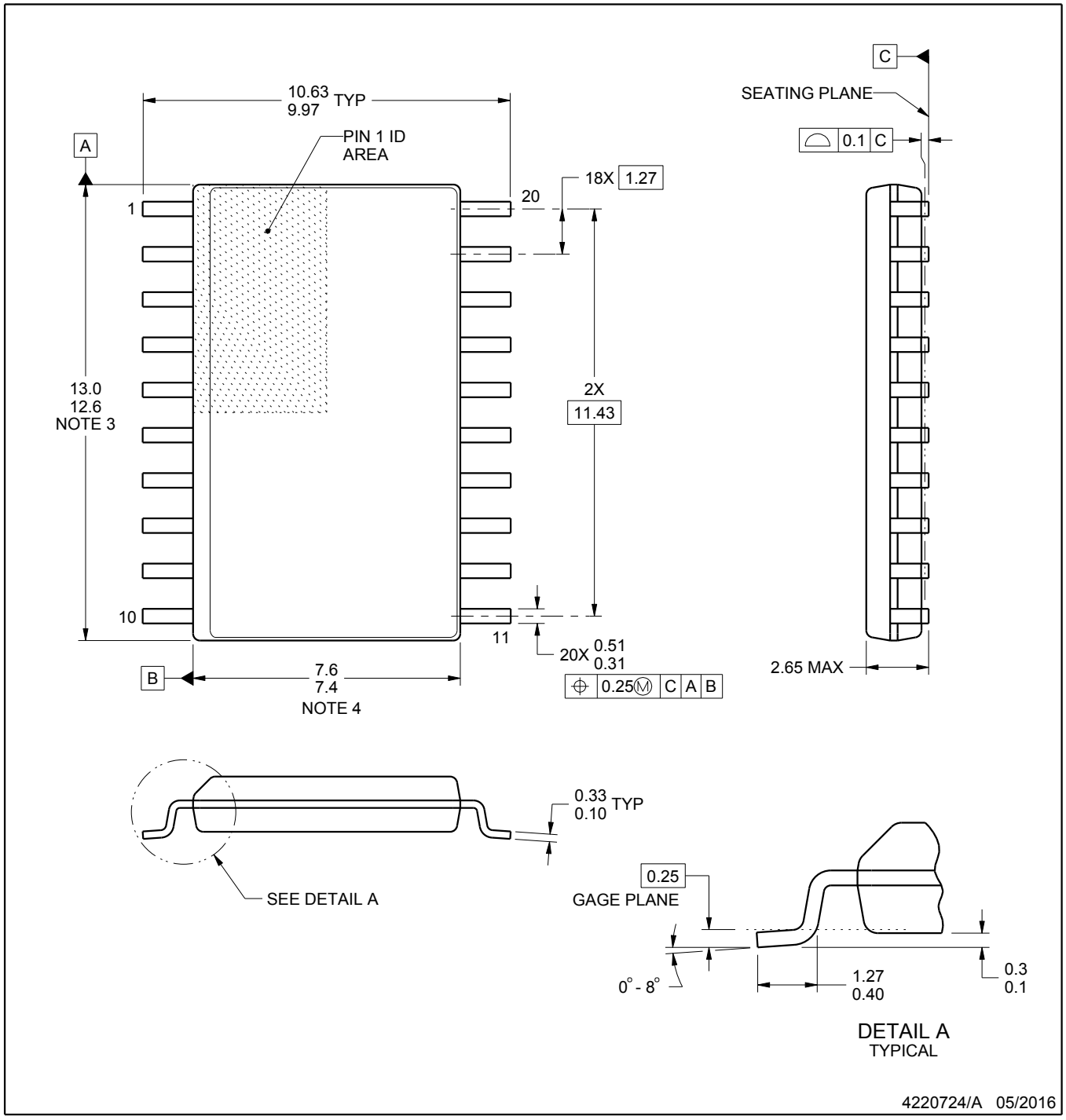

NOTES:

1. All linear dimensions are in millimeters. Dimensions in parenthesis are for reference only. Dimensioning and tolerancing per ASME Y14.5M.
2. This drawing is subject to change without notice.
3. This dimension does not include mold flash, protrusions, or gate burrs. Mold flash, protrusions, or gate burrs shall not exceed 0.15 mm per side.
4. This dimension does not include interlead flash. Interlead flash shall not exceed 0.43 mm per side.
5. Reference JEDEC registration MS-013.

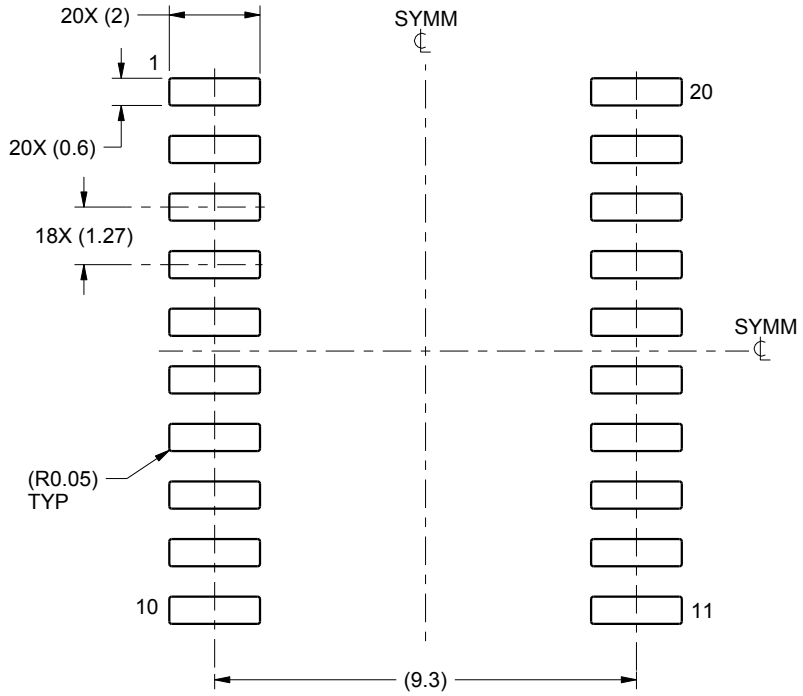

LAND PATTERN EXAMPLE
SCALE:6X

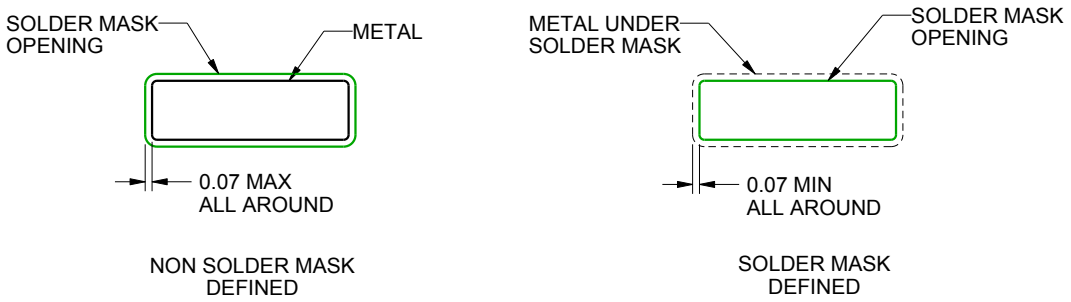

SOLDER MASK DETAILS

4220724/A 05/2016

NOTES: (continued)

6. Publication IPC-7351 may have alternate designs.
7. Solder mask tolerances between and around signal pads can vary based on board fabrication site.

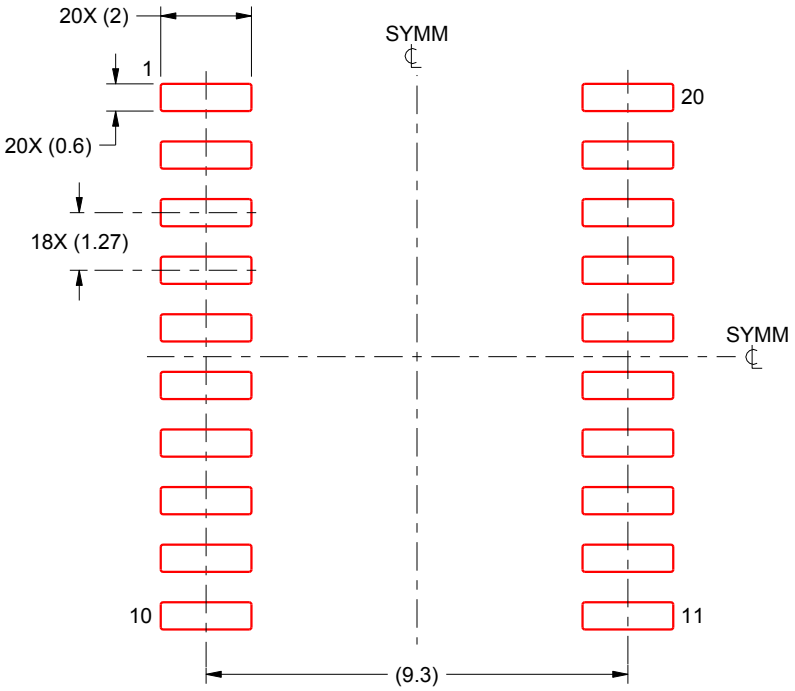

SOLDER PASTE EXAMPLE
BASED ON 0.125 mm THICK STENCIL
SCALE:6X

4220724/A 05/2016

NOTES: (continued)

8. Laser cutting apertures with trapezoidal walls and rounded corners may offer better paste release. IPC-7525 may have alternate design recommendations.
9. Board assembly site may have different recommendations for stencil design.

FK (S–CQCC–N**) LEADLESS CERAMIC CHIP CARRIER

28 TERMINAL SHOWN

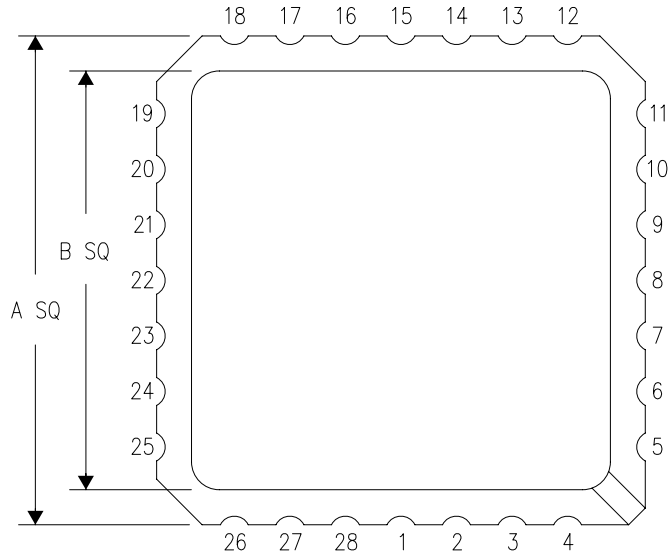

NO. OF TERMINALS **	A		B	
	MIN	MAX	MIN	MAX
20	0.342 (8,69)	0.358 (9,09)	0.307 (7,80)	0.358 (9,09)
28	0.442 (11,23)	0.458 (11,63)	0.406 (10,31)	0.458 (11,63)
44	0.640 (16,26)	0.660 (16,76)	0.495 (12,58)	0.560 (14,22)
52	0.740 (18,78)	0.761 (19,32)	0.495 (12,58)	0.560 (14,22)
68	0.938 (23,83)	0.962 (24,43)	0.850 (21,6)	0.858 (21,8)
84	1.141 (28,99)	1.165 (29,59)	1.047 (26,6)	1.063 (27,0)

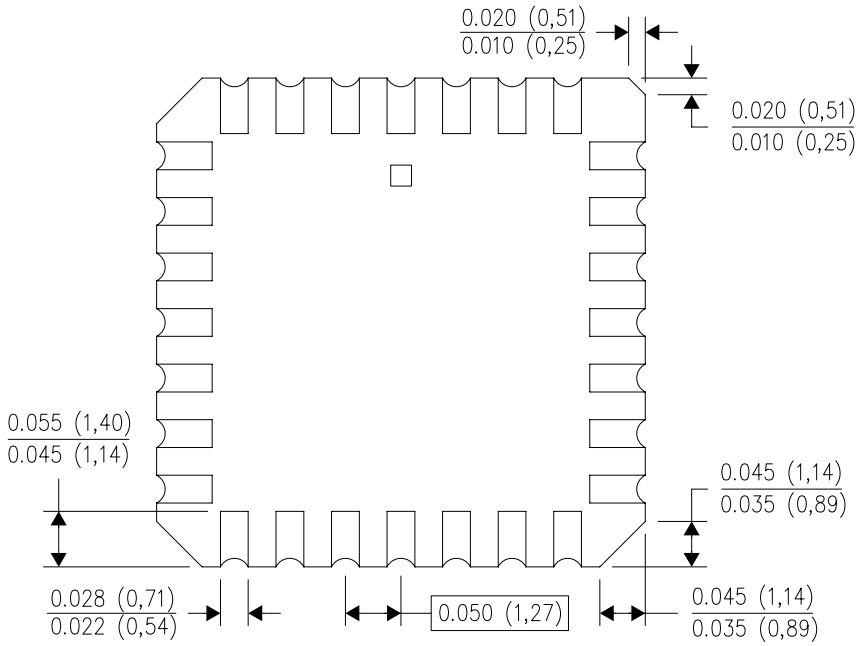

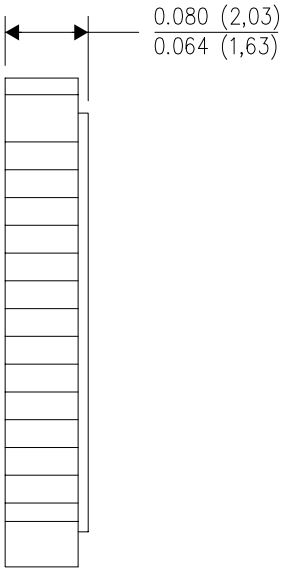

4040140/D 01/11

NOTES:
A. All linear dimensions are in inches (millimeters).
B. This drawing is subject to change without notice.
C. This package can be hermetically sealed with a metal lid.
D. Falls within JEDEC MS–004

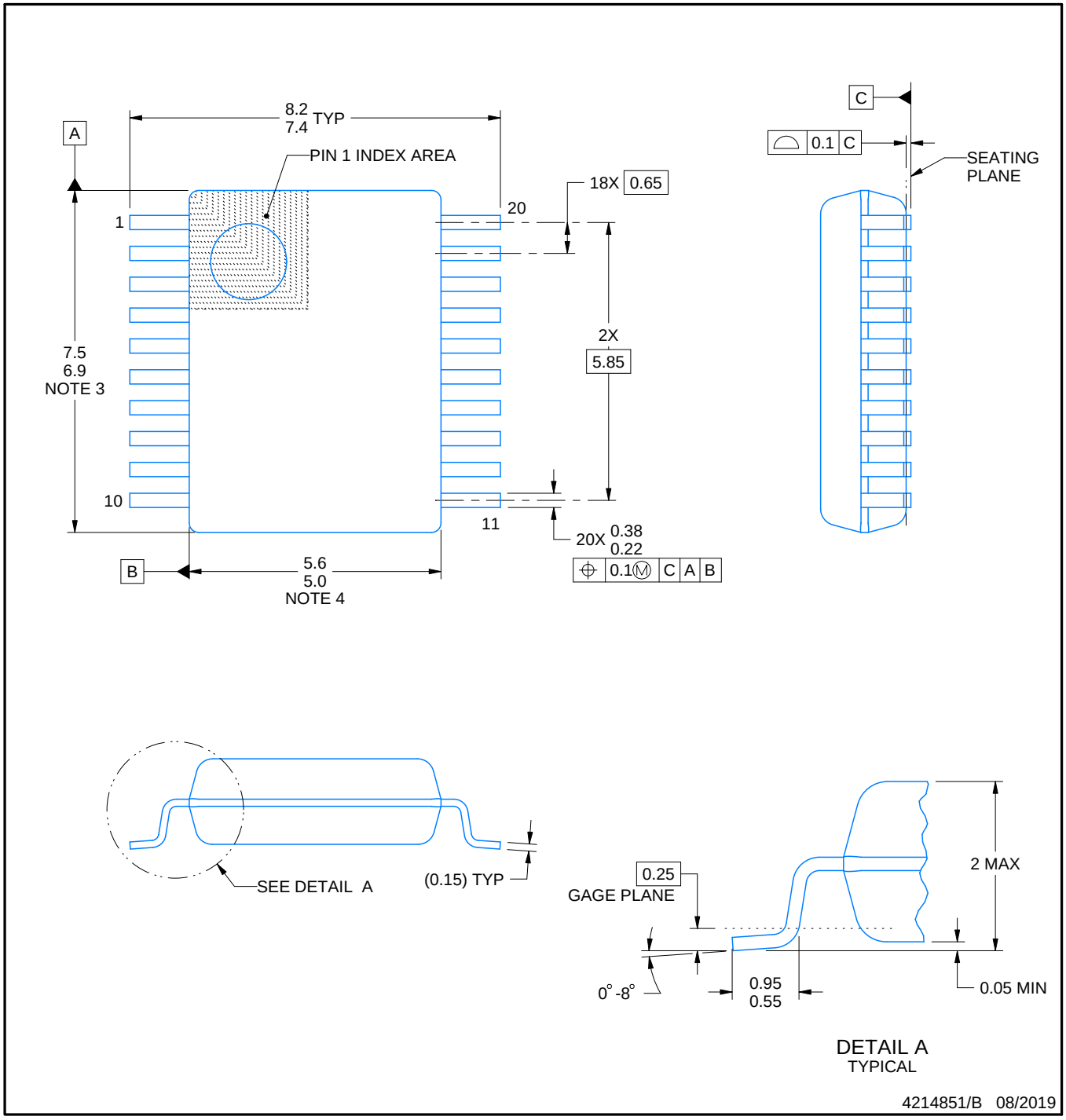

NOTES:

1. All linear dimensions are in millimeters. Any dimensions in parenthesis are for reference only. Dimensioning and tolerancing per ASME Y14.5M.
2. This drawing is subject to change without notice.
3. This dimension does not include mold flash, protrusions, or gate burrs. Mold flash, protrusions, or gate burrs shall not exceed 0.15 mm per side.
4. This dimension does not include interlead flash. Interlead flash shall not exceed 0.25 mm per side.
5. Reference JEDEC registration MO-150.

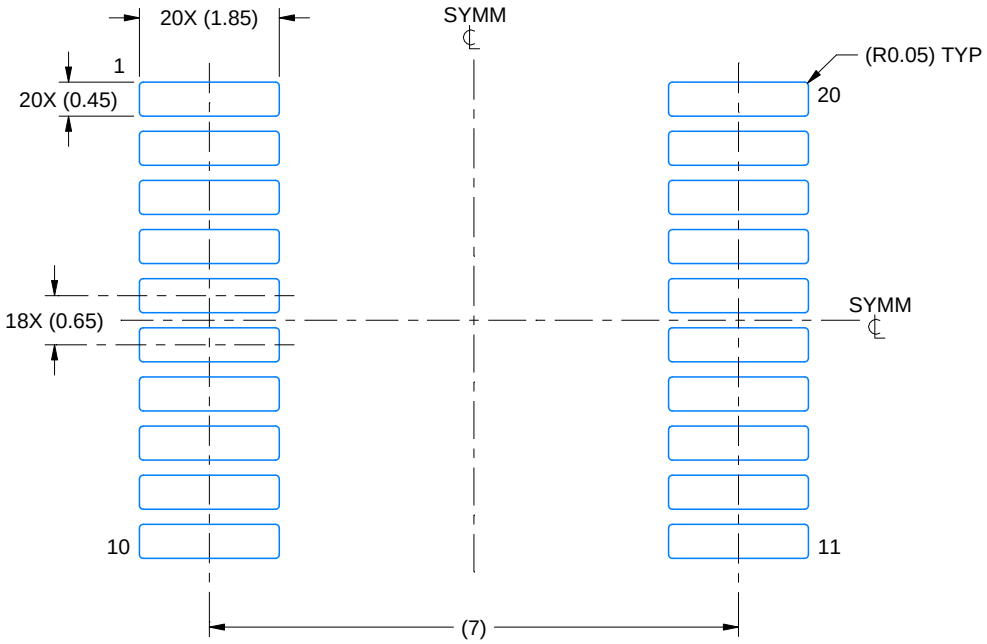

LAND PATTERN EXAMPLE
EXPOSED METAL SHOWN
SCALE: 10X

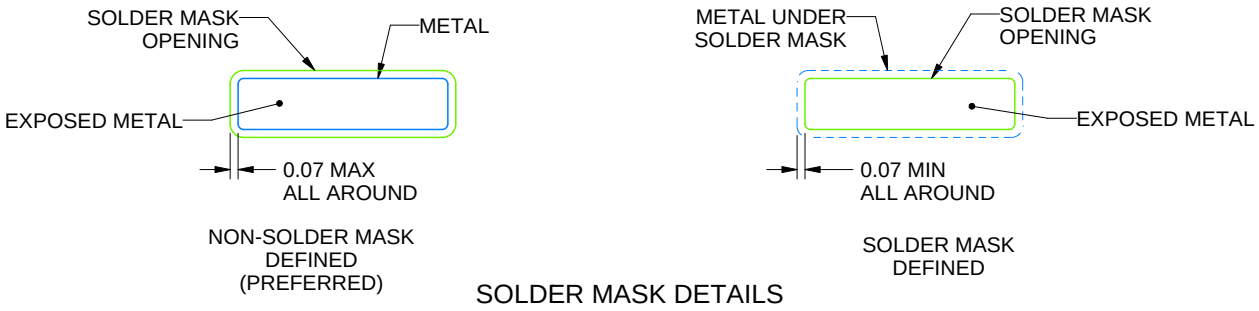

SOLDER MASK DETAILS

4214851/B 08/2019

NOTES: (continued)

6. Publication IPC-7351 may have alternate designs.
7. Solder mask tolerances between and around signal pads can vary based on board fabrication site.

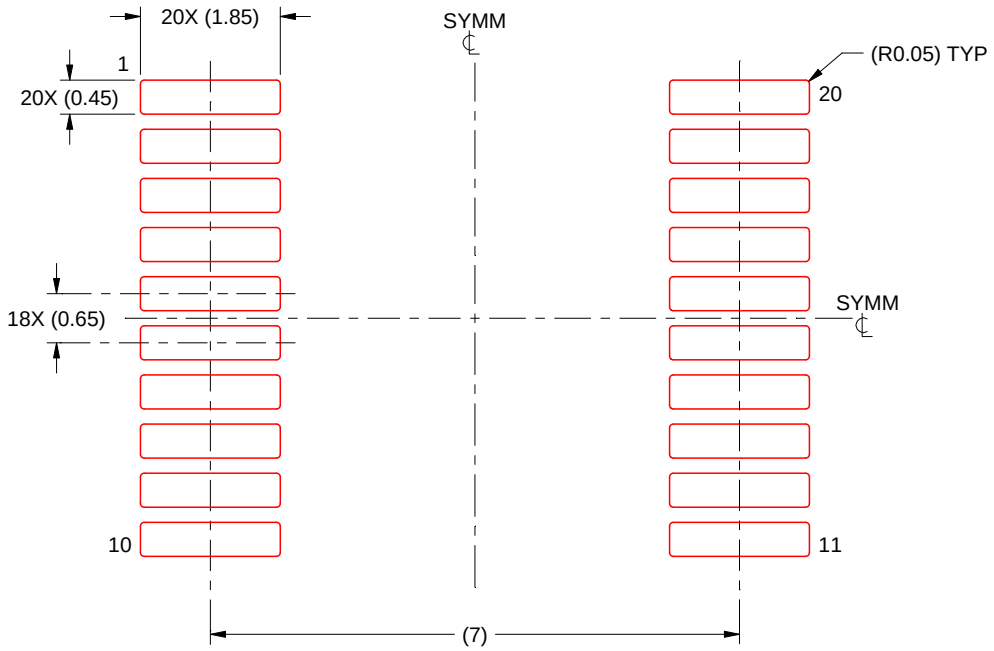

SOLDER PASTE EXAMPLE
BASED ON 0.125 mm THICK STENCIL
SCALE: 10X

4214851/B 08/2019

NOTES: (continued)

8. Laser cutting apertures with trapezoidal walls and rounded corners may offer better paste release. IPC-7525 may have alternate design recommendations.
9. Board assembly site may have different recommendations for stencil design.

MECHANICAL DATA

NS (R-PDSO-G)** **PLASTIC SMALL-OUTLINE PACKAGE**

14-PINS SHOWN

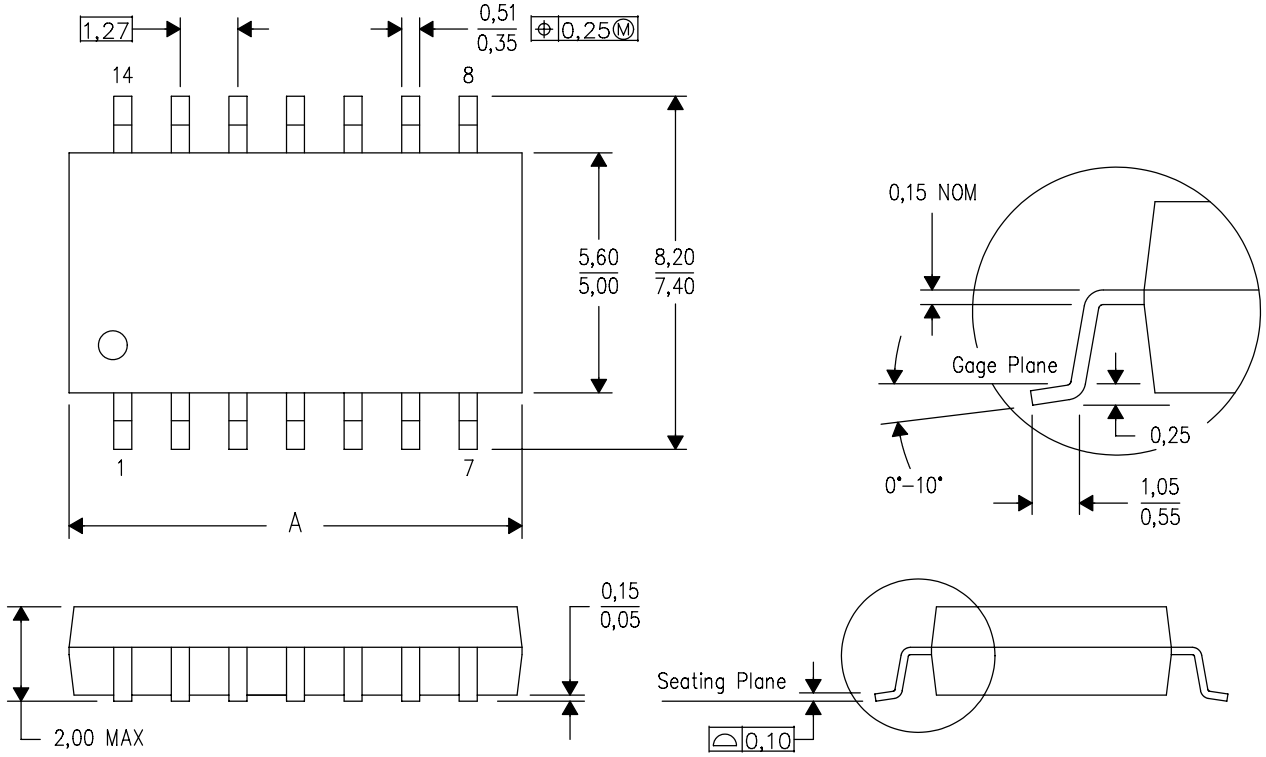

DIM \ PINS **	14	16	20	24
A MAX	10,50	10,50	12,90	15,30
A MIN	9,90	9,90	12,30	14,70

4040062/C 03/03

NOTES:
A. All linear dimensions are in millimeters.
B. This drawing is subject to change without notice.
C. Body dimensions do not include mold flash or protrusion, not to exceed 0,15.

J (R–GDIP–T**) CERAMIC DUAL IN–LINE PACKAGE

14 LEADS SHOWN

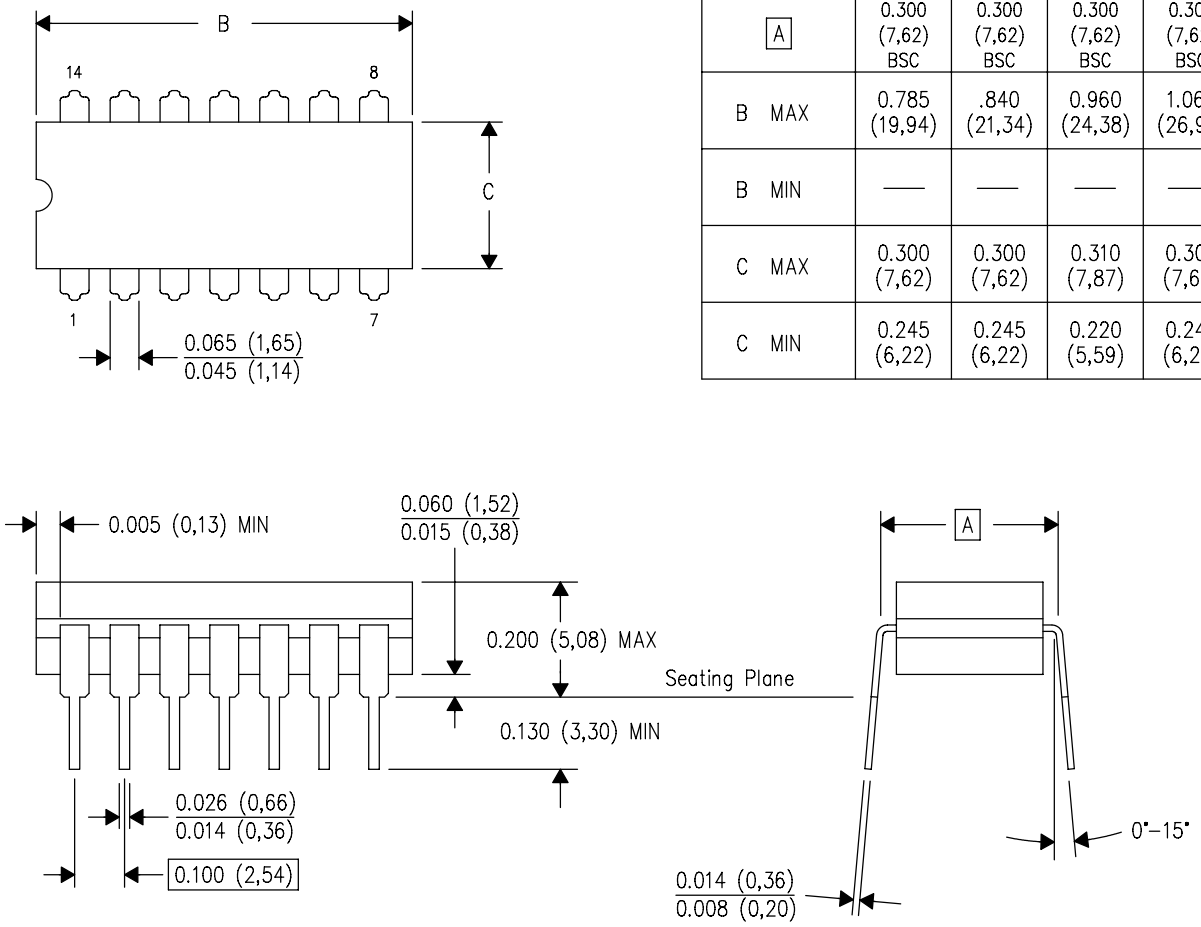

DIM \ PINS **	14	16	18	20
A	0.300 (7,62) BSC	0.300 (7,62) BSC	0.300 (7,62) BSC	0.300 (7,62) BSC
B MAX	0.785 (19,94)	.840 (21,34)	0.960 (24,38)	1.060 (26,92)
B MIN	—	—	—	—
C MAX	0.300 (7,62)	0.300 (7,62)	0.310 (7,87)	0.300 (7,62)
C MIN	0.245 (6,22)	0.245 (6,22)	0.220 (5,59)	0.245 (6,22)

4040083/F 03/03

NOTES:
- A. All linear dimensions are in inches (millimeters).
- B. This drawing is subject to change without notice.
- C. This package is hermetically sealed with a ceramic lid using glass frit.
- D. Index point is provided on cap for terminal identification only on press ceramic glass frit seal only.
- E. Falls within MIL STD 1835 GDIP1–T14, GDIP1–T16, GDIP1–T18 and GDIP1–T20.

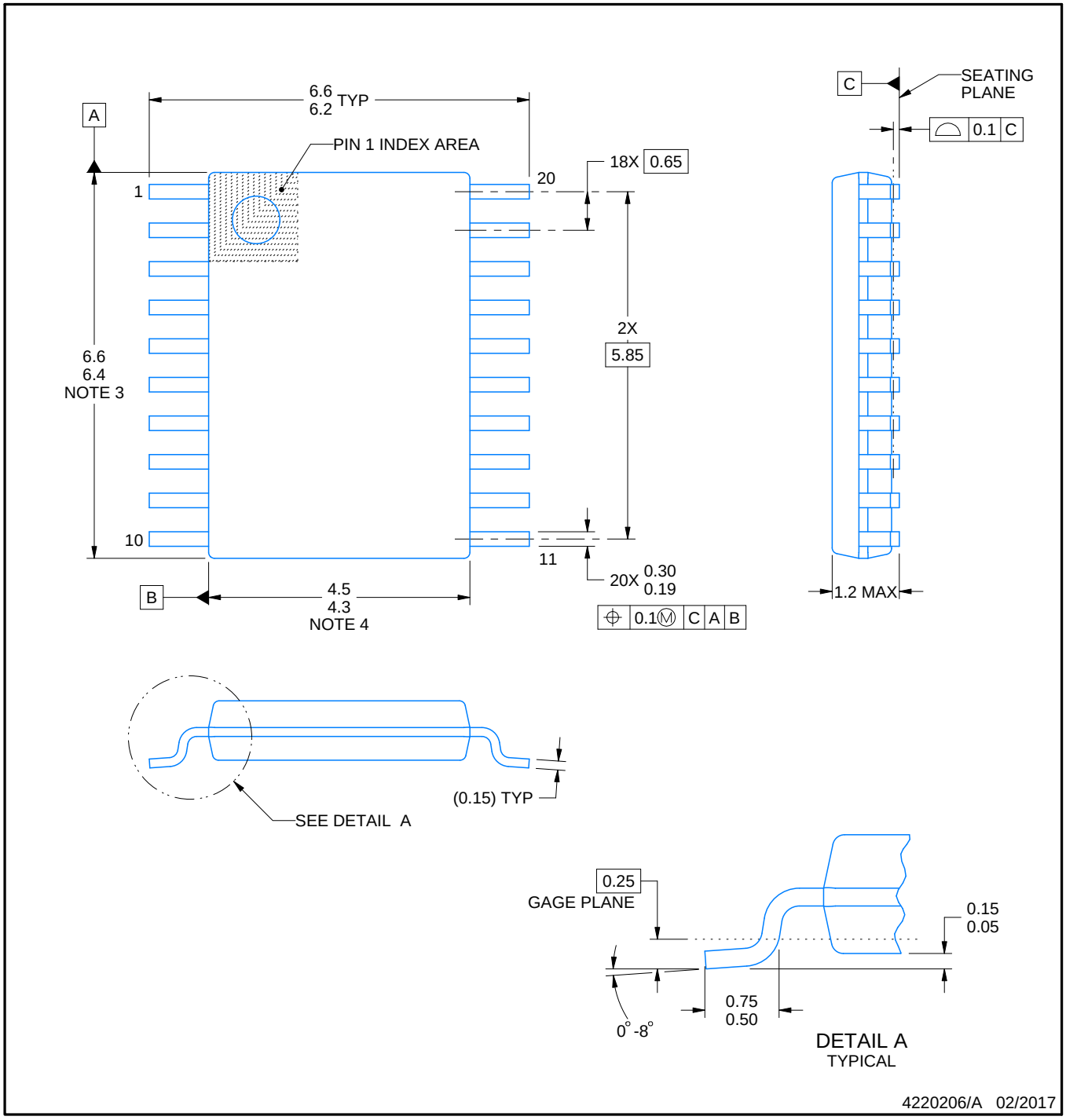

NOTES:

1. All linear dimensions are in millimeters. Any dimensions in parenthesis are for reference only. Dimensioning and tolerancing per ASME Y14.5M.
2. This drawing is subject to change without notice.
3. This dimension does not include mold flash, protrusions, or gate burrs. Mold flash, protrusions, or gate burrs shall not exceed 0.15 mm per side.
4. This dimension does not include interlead flash. Interlead flash shall not exceed 0.25 mm per side.
5. Reference JEDEC registration MO-153.

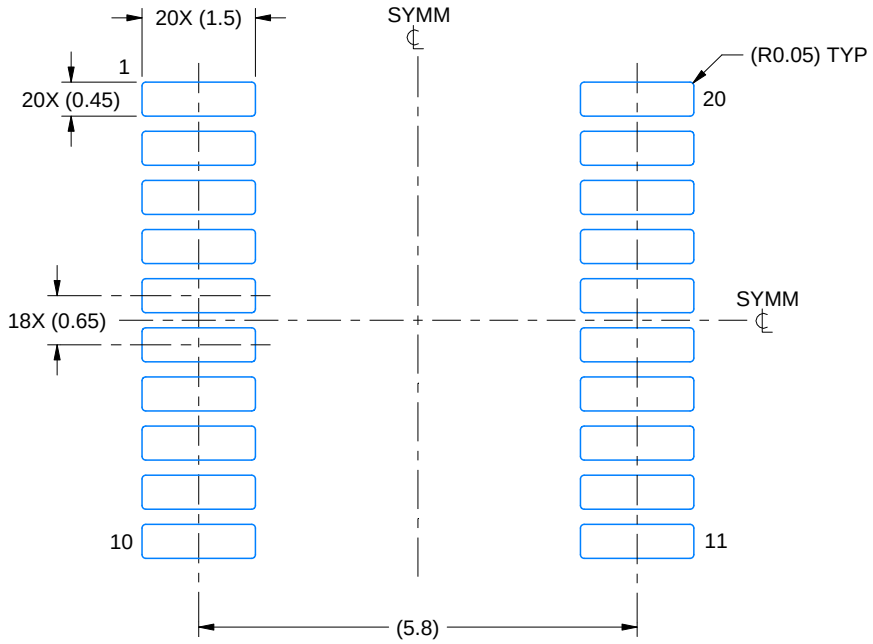

LAND PATTERN EXAMPLE
EXPOSED METAL SHOWN
SCALE: 10X

NON-SOLDER MASK DEFINED (PREFERRED)

SOLDER MASK DEFINED

SOLDER MASK DETAILS

4220206/A 02/2017

NOTES: (continued)

6. Publication IPC-7351 may have alternate designs.
7. Solder mask tolerances between and around signal pads can vary based on board fabrication site.

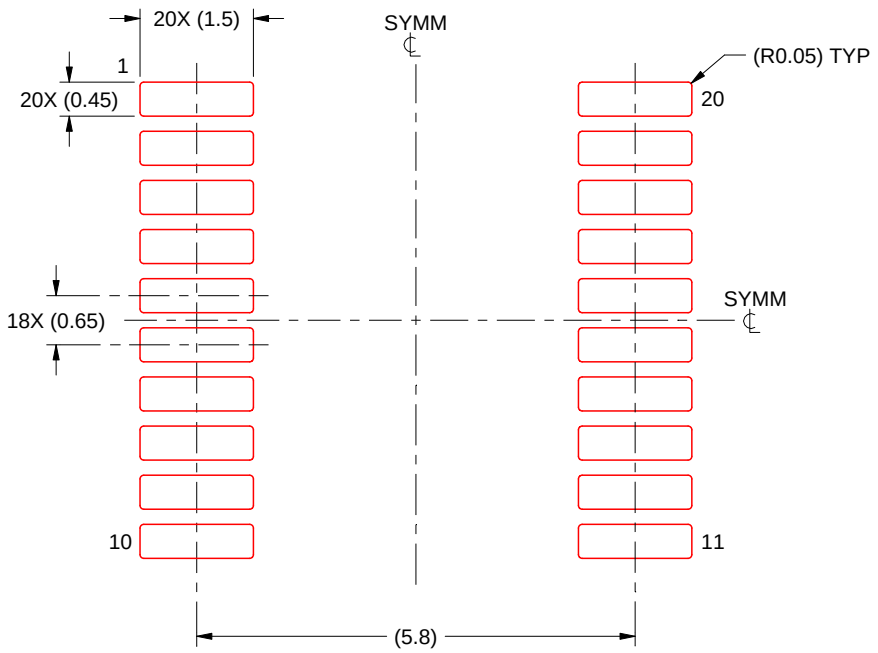

SOLDER PASTE EXAMPLE
BASED ON 0.125 mm THICK STENCIL
SCALE: 10X

4220206/A 02/2017

NOTES: (continued)

8. Laser cutting apertures with trapezoidal walls and rounded corners may offer better paste release. IPC-7525 may have alternate design recommendations.
9. Board assembly site may have different recommendations for stencil design.

PW (R–PDSO–G20) PLASTIC SMALL OUTLINE

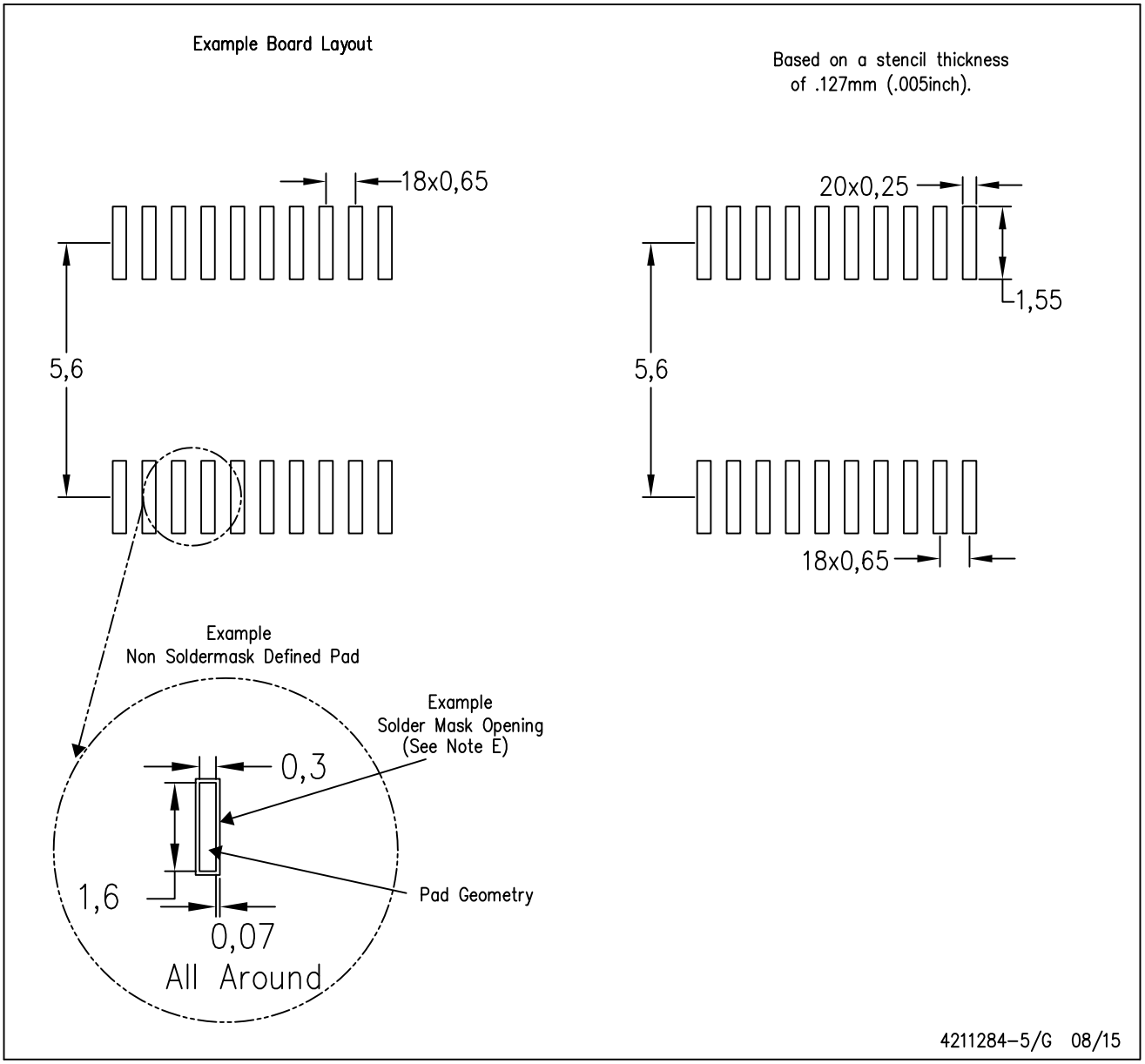

NOTES:
A. All linear dimensions are in millimeters.
B. This drawing is subject to change without notice.
C. Publication IPC–7351 is recommended for alternate design.
D. Laser cutting apertures with trapezoidal walls and also rounding corners will offer better paste release. Customers should contact their board assembly site for stencil design recommendations. Refer to IPC–7525 for other stencil recommendations.
E. Customers should contact their board fabrication site for solder mask tolerances between and around signal pads.

IMPORTANT NOTICE AND DISCLAIMER

TI PROVIDES TECHNICAL AND RELIABILITY DATA (INCLUDING DATA SHEETS), DESIGN RESOURCES (INCLUDING REFERENCE DESIGNS), APPLICATION OR OTHER DESIGN ADVICE, WEB TOOLS, SAFETY INFORMATION, AND OTHER RESOURCES “AS IS” AND WITH ALL FAULTS, AND DISCLAIMS ALL WARRANTIES, EXPRESS AND IMPLIED, INCLUDING WITHOUT LIMITATION ANY IMPLIED WARRANTIES OF MERCHANTABILITY, FITNESS FOR A PARTICULAR PURPOSE OR NON-INFRINGEMENT OF THIRD PARTY INTELLECTUAL PROPERTY RIGHTS.

These resources are intended for skilled developers designing with TI products. You are solely responsible for (1) selecting the appropriate TI products for your application, (2) designing, validating and testing your application, and (3) ensuring your application meets applicable standards, and any other safety, security, regulatory or other requirements.

These resources are subject to change without notice. TI grants you permission to use these resources only for development of an application that uses the TI products described in the resource. Other reproduction and display of these resources is prohibited. No license is granted to any other TI intellectual property right or to any third party intellectual property right. TI disclaims responsibility for, and you will fully indemnify TI and its representatives against, any claims, damages, costs, losses, and liabilities arising out of your use of these resources.

TI’s products are provided subject to TI’s Terms of Sale or other applicable terms available either on ti.com or provided in conjunction with such TI products. TI’s provision of these resources does not expand or otherwise alter TI’s applicable warranties or warranty disclaimers for TI products.

TI objects to and rejects any additional or different terms you may have proposed.

Mailing Address: Texas Instruments, Post Office Box 655303, Dallas, Texas 75265
Copyright © 2022, Texas Instruments Incorporated