BQ2945xy 适用于 2 节和 3 节串联锂离子电池的过压保护器件

1 特性

- 用于二级保护的 2 节和 3 节串联电池过压监控器
- 固定可编程延迟计时器
- 固定 OVP 阈值
  - 可用范围为 3.85V 至 4.6V
- 固定 OVP 延迟选项：4s 或 6.5s
- 高精度过压保护：
  ±10mV
- 低功耗 I_{CC} ≈ 1μA
  ($V_{CELL(ALL)}$ < $V_{PROTECT}$)
- 每节电池输入具有小于 100nA 的低泄漏电流
- 小型封装尺寸
  - 6 引脚 SON

2 应用

- 用于下列产品的锂离子电池组中的二级保护：
  - 平板电脑
  - 手写板电脑
  - 电动工具
  - 笔记本电脑
  - 便携式设备和仪器

3 说明

BQ2945xy 系列产品是用于锂离子电池组系统的二级电压监控器和保护器。独立监控每节电池是否具有过压状态。根据配置，如果两节或三节电池中的任何电池处于过压状态，则在经过固定的延迟后会触发一个输出。在过压状态满足指定的延迟计时器条件后，该输出被触发为高电平状态。

器件信息

器件型号(1)	封装	封装尺寸（标称值）
BQ2945xy	SON (6)	2.00mm × 2.00mm

(1) 如需了解所有可用封装，请参阅数据表末尾的可订购产品附录。

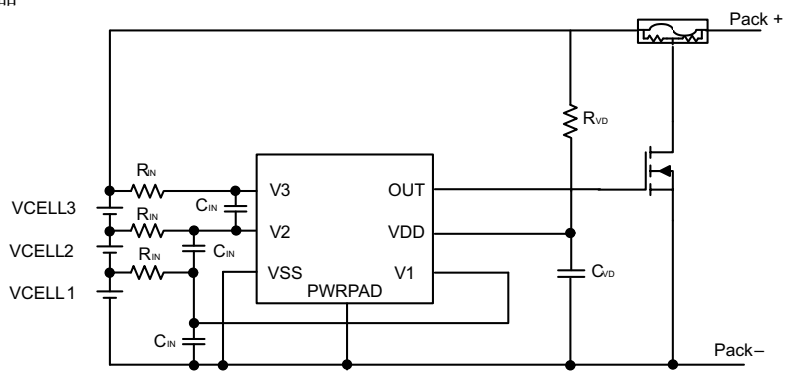

Copyright © 2017, Texas Instruments Incorporated

简化版原理图

本文档旨在为方便起见，提供有关 TI 产品中文版本的信息，以确认产品的概要。有关适用的官方英文版本的最新信息，请访问 www.ti.com，其内容始终优先。TI 不保证翻译的准确性和有效性。在实际设计之前，请务必参考最新版本的英文版本。

Table of Contents

1 特性 ... 1
2 应用 ... 1
3 说明 ... 1
4 Revision History ... 2
5 Device Comparison Table ... 3
6 Pin Configuration and Functions ... 4
7 Specifications ... 5
7.1 Absolute Maximum Ratings ... 5
7.2 ESD Ratings ... 5
7.3 Recommended Operating Conditions ... 5
7.4 Thermal Information ... 5
7.5 Electrical Characteristics ... 6
7.6 Typical Characteristics ... 7
8 Detailed Description ... 8
8.1 Overview ... 8
8.2 Functional Block Diagram ... 8
8.3 Feature Description ... 8
8.4 Device Functional Modes ... 9
9 Layout ... 13
9.1 Layout Guidelines ... 13
9.2 Layout Example ... 13
10 Device and Documentation Support ... 14
10.1 Device Support ... 14
10.2 Receiving Notification of Documentation Updates ... 14
10.3 支持资源 ... 14
10.4 Trademarks ... 14
10.5 Electrostatic Discharge Caution ... 14
10.6 Glossary ... 14
11 Mechanical, Packaging, and Orderable Information ... 14

4 Revision History

注：以前版本的页码可能与当前版本的页码不同

Changes from Revision H (December 2017) to Revision I (May 2021)	Page
• Changed the BQ294506 device to Production Data	3

Changes from Revision G (November 2017) to Revision H (December 2017)	Page
• Added the BQ294506 device	3
• Added the BQ294506 device to the *Electrical Characteristics*	6

Copyright © 2021 Texas Instruments Incorporated

5 Device Comparison Table

T_A	PART NUMBER	OVP (V)	DELAY TIME (s)
–40°C to +110°C	BQ294502	4.35	4
	BQ294504	4.35	6.5
	BQ294506	4.38	4
	BQ294512	4.4	4
	BQ294522	4.45	4
	BQ294524	4.45	6.5
	BQ294532	4.5	4
	BQ294533	4.5	6.5
	BQ294582	4.225	4
	BQ294592	4.3	4

Copyright © 2021 Texas Instruments Incorporated

6 Pin Configuration and Functions

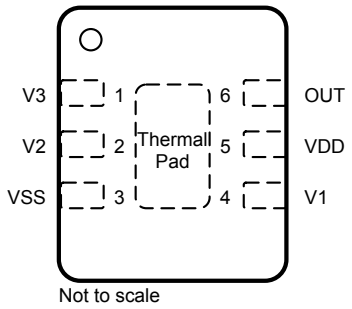

图 6-1. DRV Package 6-Pin SON Top View

表 6-1. Pin Functions

NUMBER	NAME	I/O(1)	DESCRIPTION
1	V3	IA	Sense input for positive voltage of the third cell from the bottom of the stack.
2	V2	IA	Sense input for positive voltage of the second cell from the bottom of the stack.
3	VSS	P	Electrically connected to IC ground and negative terminal of the lowest cell in the stack.
4	V1	IA	Sense input for positive voltage of the lowest cell in the stack.
5	VDD	P	Power supply
6	OUT	OA[1]	Output drive for external N-channel FET.
—	PWRPAD	—	VSS pin to be connected to the PWRPAD on the printed-circuit-board (PCB) for proper operation.

(1) IA = Input Analog, OA = Output Analog, P = Power Connection

Copyright © 2021 Texas Instruments Incorporated

7 Specifications

7.1 Absolute Maximum Ratings

over operating free-air temperature range (unless otherwise noted)[(1) (2)]

		MIN	MAX	UNIT
Supply voltage	VDD – VSS	– 0.3	30	V
Input voltage	V1 – VSS or V2 – VSS or V3 – VSS+	– 0.3	30	V
	V3 – V2 or V2 – V1	– 0.3	8	V
Output voltage	OUT – VSS	– 0.3	30	V
Continuous total power dissipation, P_{TOT}		See 节 7.4		
Lead temperature (soldering, 10 s), T_{SOLDER}			300	°C
Storage temperature, T_{stg}		– 65	150	°C

(1) Stresses beyond those listed under *Absolute Maximum Ratings* may cause permanent damage to the device. These are stress ratings only, which do not imply functional operation of the device at these or any other conditions beyond those indicated under *Recommended Operating Conditions*. Exposure to absolute-maximum-rated conditions for extended periods may affect device reliability.
(2) See 图 8-3.

7.2 ESD Ratings

		VALUE	UNIT
$V_{(ESD)}$ Electrostatic discharge	Human body model (HBM), per ANSI/ESDA/JEDEC JS-001[(1)]	±2000	V
	Charged device model (CDM), per JEDEC specification JESD22-C101[(2)]	±500	

(1) JEDEC document JEP155 states that 500-V HBM allows safe manufacturing with a standard ESD control process.
(2) JEDEC document JEP157 states that 250-V CDM allows safe manufacturing with a standard ESD control process.

7.3 Recommended Operating Conditions

over operating free-air temperature range (unless otherwise noted)

		MIN	MAX	UNIT
Supply voltage, V_{DD} [(1)]		3	25	V
Input voltage	V3 – V2 or V2 – V1 or V1 – VSS	0	5	V
Operating ambient temperature, T_A		– 40	110	°C

(1) See 节 9.2.

7.4 Thermal Information

THERMAL METRIC[(1)]		BQ2945xy DRV (SON) 6 PINS	UNIT
$R_{\theta JA}$	Junction-to-ambient thermal resistance	186.4	°C/W
$R_{\theta JC(top)}$	Junction-to-case(top) thermal resistance	90.4	°C/W
$R_{\theta JB}$	Junction-to-board thermal resistance	110.7	°C/W
ψ_{JT}	Junction-to-top characterization parameter	96.7	°C/W
ψ_{JB}	Junction-to-board characterization parameter	90	°C/W
$R_{\theta JC(bot)}$	Junction-to-case(bottom) thermal resistance	N/A	°C/W

(1) For more information about traditional and new thermal metrics, see the *Semiconductor and IC Package Thermal Metrics* application report.

7.5 Electrical Characteristics

Typical values stated where T_A = 25°C and VDD = 10.8 V, MIN/MAX values stated where T_A = –40°C to +110°C and V_{DD} = 3 V to 15 V (unless otherwise noted).

PARAMETER		TEST CONDITIONS	MIN	TYP	MAX	UNIT
VOLTAGE PROTECTION THRESHOLD VCx						
V_{OV}	$V_{(PROTECT)}$ – Overvoltage Detection	BQ294502, fixed delay 4 s		4.35		V
		BQ294504, fixed delay 6.5 s		4.35		
		BQ294506, fixed delay 4 s		4.38		
		BQ294512, fixed delay 4 s		4.4		
		BQ294522, fixed delay 4 s		4.45		
		BQ294524, fixed delay 6.5 s		4.45		
		BQ294532, fixed delay 4 s		4.5		
		BQ294533, fixed delay 6.5 s		4.5		
		BQ294582, fixed delay 4 s		4.225		
		BQ294592, fixed delay 4 s		4.3		
V_{HYS}	Overvoltage Detection Hysteresis	V_{HYS}	250	300	400	mV
V_{OA}	OV Detection Accuracy	T_A = 25°C, BQ2945xy	–10		10	mV
		T_A = 25°C, BQ294506 only	–7		7	mV
V_{OA_DRIFT}	OV Detection Accuracy due to Temperature	T_A = –40°C T_A = 0°C T_A = 60°C T_A = 110°C	–40 –20 –24 –54		44 20 24 54	mV
		T_A = 10°C to 45°C, BQ294506 only	–15		15	mV
SUPPLY AND LEAKAGE CURRENT						
I_{CC}	Supply Current	(V3 – V2) = (V2 – V1) = (V1 – VSS) = 4 V (See 图 8-3 for reference.)		1	2	µA
		(V3 – V2) = (V2 – V1) = (V1 – VSS) = 2.8 V with T_A = –40°C to 60°C			1.25	
I_{IN}	Input Current at Vx Pins	Measured at V3, V2, and V1 = 4 V (V2 – V1) = (V1 – VSS) = 4 V T_A = 0°C to 60°C (See 图 8-3 for reference.)	–0.1		0.1	µA
OUTPUT DRIVE OUT						
V_{OUT}	Output Drive Voltage	(V3 – V2) or (V2 – V1) or (V1 – VSS) > V_{OV} V_{DD} = 7.2 V, I_{OH} = 100 µA, T_A = –40°C to +110°C	6			V
		Two of the three cells are short circuit and only one cell is powered (V3 – V2) or (V2 – V1) or (V1 – VSS) > V_{OV} V_{DD} = Vx (Cell voltage), I_{OH} = 100 µA, T_A = –40°C to +110°C		VDD – 0.2		V
		(V3 – V2), (V2 – V1), and (V1 – VSS) < V_{OV}, I_{OL} = 100 µA, T_A = 25°C T_A = –40°C to +110°C		250	400	mV
$I_{OUT(Short)}$	OUT Short Circuit Current	OUT = 0 V (V3 – V2) or (V2 – V1) or (V1 – VSS) > V_{OV}			4.5	mA
t_R	Output Rise Time	CL = 1 nF, $V_{OH(OUT)}$ = 0 V to 5 V(1)		5		µs
Z_O	Output Impedance			2	5	kΩ
FIXED DELAY TIMER						
t_{DELAY}	Fault Detection Delay Time	Fixed Delay, BQ2945xy with delay set to 4s typ	3.2	4	4.8	s
		Fixed Delay, BQ2945xy with delay set to 6.5 s	5.2	6.5	7.8	

Copyright © 2021 Texas Instruments Incorporated

7.5 Electrical Characteristics (continued)

Typical values stated where T_A = 25°C and VDD = 10.8 V, MIN/MAX values stated where T_A = –40°C to +110°C and V_{DD} = 3 V to 15 V (unless otherwise noted).

PARAMETER		TEST CONDITIONS	MIN	TYP	MAX	UNIT
t_{DELAY_CTM}	Fault Detection Delay Time in Test Mode	Fixed Delay (Internal settings)		15		ms

(1) Specified by design. Not 100% tested in production.

7.6 Typical Characteristics

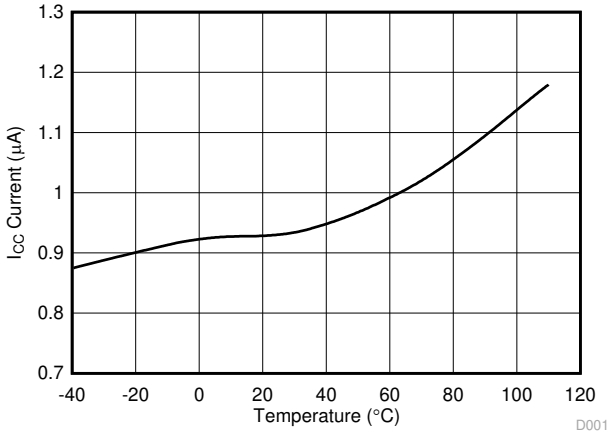

图 7-1. I_{CC} Current Consumption vs Temperature

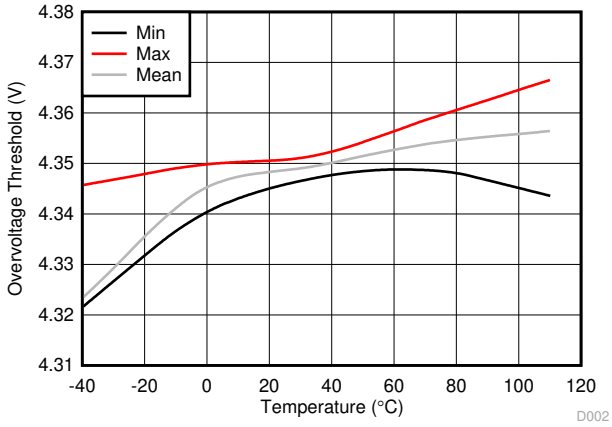

图 7-2. BQ294502 Overvoltage Threshold (OVT) vs Temperature

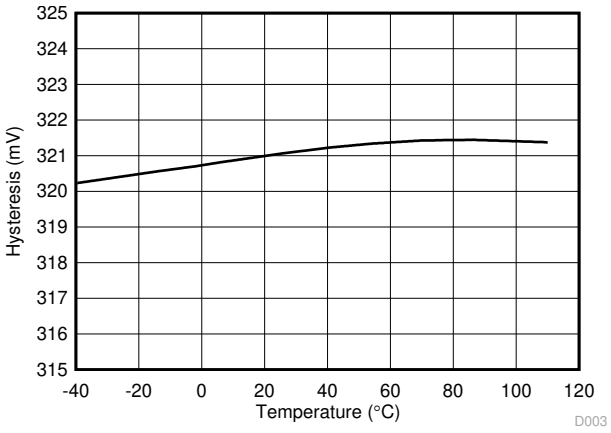

图 7-3. Hysteresis V_{HYS} vs Temperature

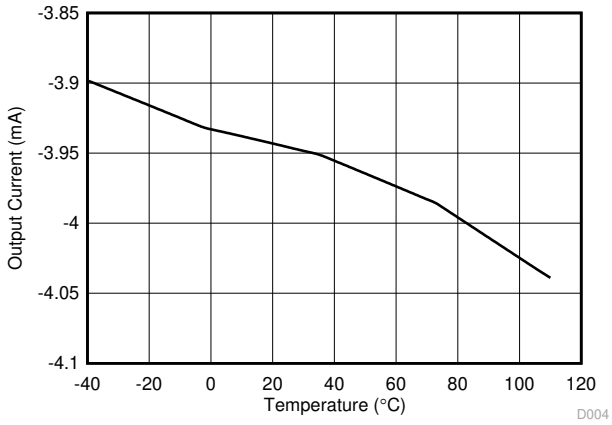

图 7-4. Output Current I_{OUT} vs Temperature

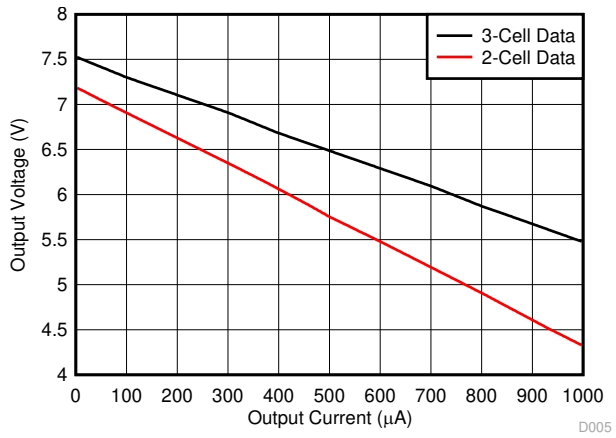

图 7-5. Output Voltage vs Output Current

8 Detailed Description

8.1 Overview

The BQ2945xy is a second-level overvoltage (OV) protector. Each cell is monitored independently by comparing the actual cell voltage to a protection voltage threshold, V_{OV}. The protection threshold is preprogrammed at the factory with a range from 3.85 V to 4.65 V.

8.2 Functional Block Diagram

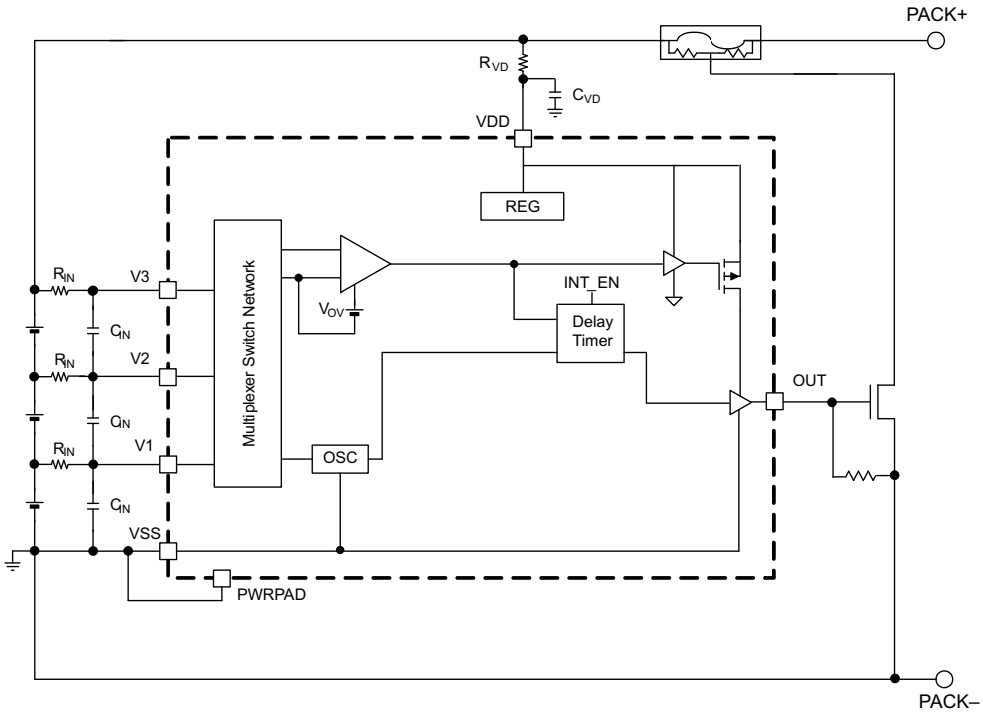

Copyright © 2017, Texas Instruments Incorporated

8.3 Feature Description

The voltage sensing for each cell is done independently using a multiplexer. The method of overvoltage detection is comparing the voltage to an overvoltage protection voltage V_{OV}. Once the voltage exceeds the programmed fixed value, the delay timer circuit is activated. This delay (t_{DELAY}) is fixed for either a 4-s or 6.5-s delay. When these conditions are satisfied, the OUT terminal is transitioned to a high level. This output (OUT) is released to a low condition if *all* of the cell inputs (Vx) are below the OVP threshold minus the Vhys.

Copyright © 2021 Texas Instruments Incorporated

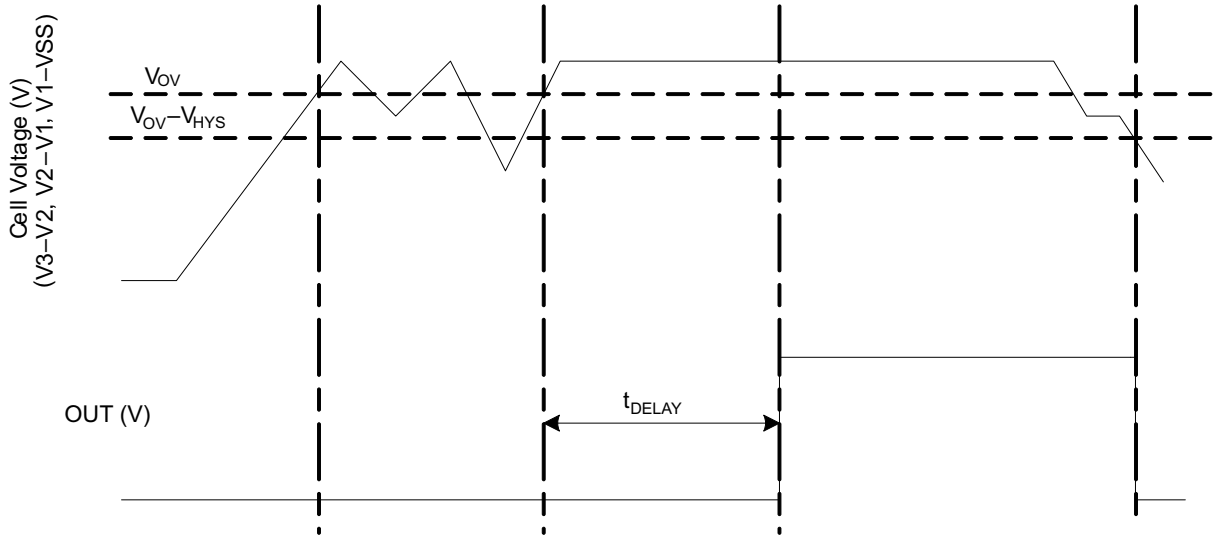

图 8-1. Timing for Overvoltage Sensing

8.3.1 Sense Positive Input for VX

This is an input to sense each single battery cell voltage. A series resistor and a capacitor across the cell for each input is required for noise filtering and stable voltage monitoring.

8.3.2 Output Drive, OUT

The gate of an external N-channel MOSFET is connected to this terminal. This output transitions to a high level when an overvoltage condition is detected and after the programmed delay timer. OUT will reset to a low level if the cell voltage falls below the V_{OV} threshold before the fixed delay timer expires.

8.3.3 Supply Input, VDD

This terminal is the unregulated input power source for the IC. A series resistor is connected to limit the current, and a capacitor is connected to ground for noise filtering.

8.3.4 Thermal Pad, PWRPAD

For correct operation, the power pad (PWRPAD) is connected to the V_{SS} terminal on the PCB.

8.4 Device Functional Modes

8.4.1 NORMAL Mode

When all of the cell voltages are below the overvoltage threshold, VOV, the device operates in NORMAL mode. The device monitors the differential cell voltages connected across (V1 – VSS), (V2 – V1) and (V3 – V2). The OUT pin is inactive in this mode.

8.4.2 OVERVOLTAGE Mode

OVERVOLTAGE mode is detected if any of the cell voltages exceeds the overvoltage threshold, V_{OV} for the configured OV delay time, tDELAY. The OUT pin will pull high internally. An external FET ihen turns on, shorting the fuse to ground, which allows the battery or charger power to blow the fuse. When all of the cell voltages fall below (V_{OV} – V_{HYS}), the device returns to NORMAL mode.

8.4.3 Customer Test Mode

Customer Test Mode (CTM) helps to reduce test time for checking the overvoltage delay timer parameter once the circuit is implemented in the battery pack. To enter CTM, VDD should be set to at least 10 V higher than V3 (see 图 8-2). The delay timer is greater than 10 ms, but considerably shorter than the timer delay in normal operation. To exit CTM, remove the VDD to VC3 voltage differential of 10 V so that the decrease in this value automatically causes an exit.

CAUTION

Avoid exceeding any Absolute Maximum Voltages on any pins when placing the part into CTM. Also avoid exceeding Absolute Maximum Voltages for the individual cell voltages (V3 – V2), (V2 – V1), and (V1 – VSS). Stressing the pins beyond the rated limits may cause permanent damage to the device.

图 8-2 shows the timing for CTM.

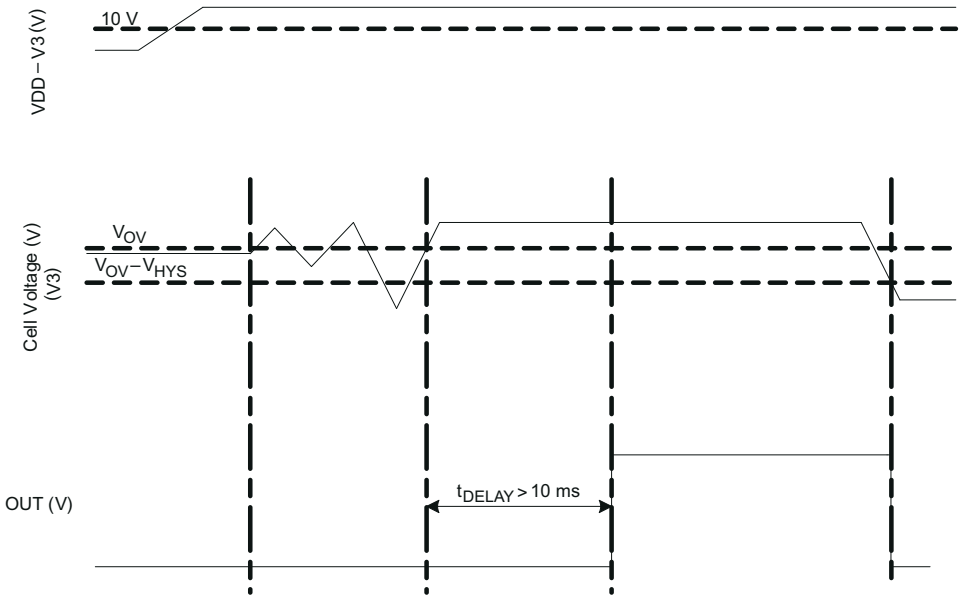

图 8-2. Timing for Customer Test Mode

图 8-3 shows the measurement for current consumption for the product for both VDD and Vx.

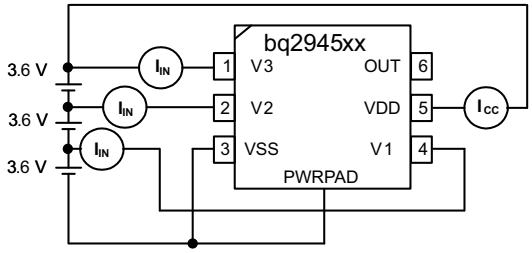

图 8-3. Configuration for IC Current Consumption Test

Copyright © 2021 Texas Instruments Incorporated

Application and Implementation

Note

Information in the following applications sections is not part of the TI component specification, and TI does not warrant its accuracy or completeness. TI’s customers are responsible for determining suitability of components for their purposes. Customers should validate and test their design implementation to confirm system functionality.

9.1 Application Information

The BQ2945xy devices are a family of second-level protectors used for overvoltage protection of the battery pack in the application. The device, when configuring the OUT pin with active high, drives a NMOS FET that connects the fuse to ground in the event of a fault condition. This provides a shorted path to use the battery or charger power to blow the fuse and cut the power path.

9.2 Typical Application

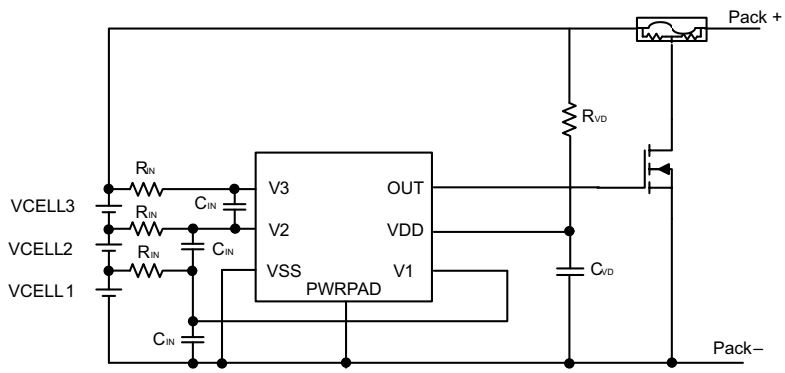

Copyright © 2017, Texas Instruments Incorporated

图 9-1. Application Configuration Schematic

9.2.1 Design Requirements

Changes to the ranges stated in 表 9-1 will impact the accuracy of the cell measurements. 图 9-1 shows each external component.

表 9-1. Parameters

PARAMETER	EXTERNAL COMPONENT	MIN	TYP	MAX	UNIT
Voltage monitor filter resistance	RIN	100	1000	4700	Ω
Voltage monitor filter capacitance	CIN	0.1		1	µF
Supply voltage filter resistance	RVD	100		1K	Ω
Supply voltage filter capacitance	CVD		0.1		µF

9.2.2 Detailed Design Procedure

1. Determine the overvoltage threshold and delay time. Select the proper device from the table in 节 5, or contact TI for a different configuration.
2. Determine the number of cell in series. The device supports 2-S to 3-S cell configuration. For 2-S configuration, V3 pin should be shorted to V2.
3. Follow the application configuration schematic (see 图 9-1) to connect the device.

9.2.3 Application Curves

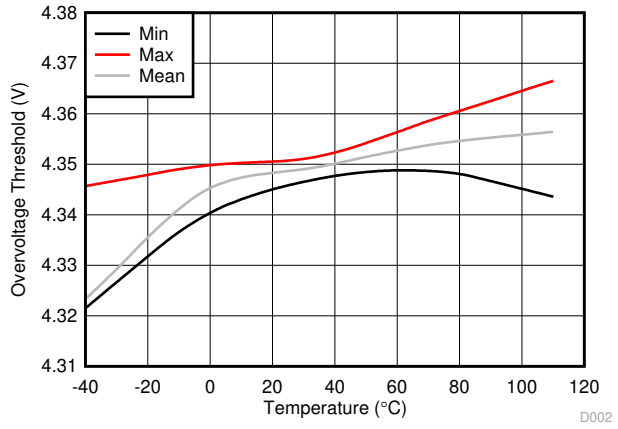

图 9-2. OVT vs Temperature

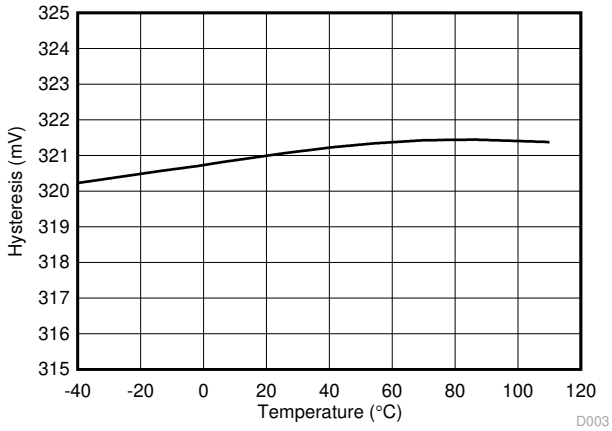

图 9-3. V_{HYS} vs Temperature

9.3 System Examples

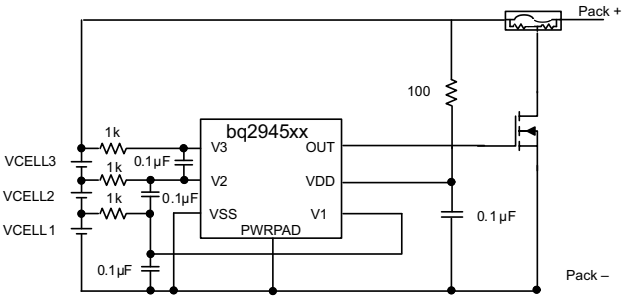

图 9-4. 3-Series Cell Configuration with Fixed Delay

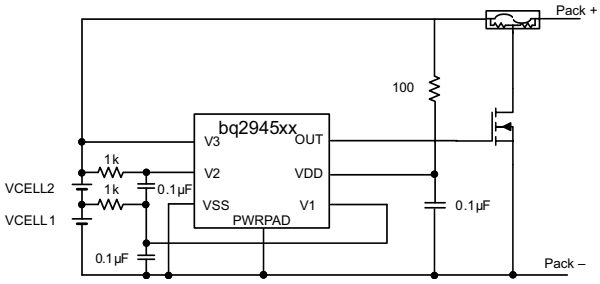

图 9-5. 2-Series Cell Configuration with Internal Fixed Delay

Copyright © 2021 Texas Instruments Incorporated

Power Supply Recommendations

The maximum power of this device is 25 V on VDD.

9 Layout

9.1 Layout Guidelines

- Ensure the RC filters for the V1 and VDD pins are placed as close as possible to the target terminal, reducing the tracing loop area.
- The VSS pin should be routed to the CELL – terminal.
- Ensure the trace connecting the fuse to the gate, source of the NFET to the Pack – is sufficient to withstand the current during a fuse blown event.

9.2 Layout Example

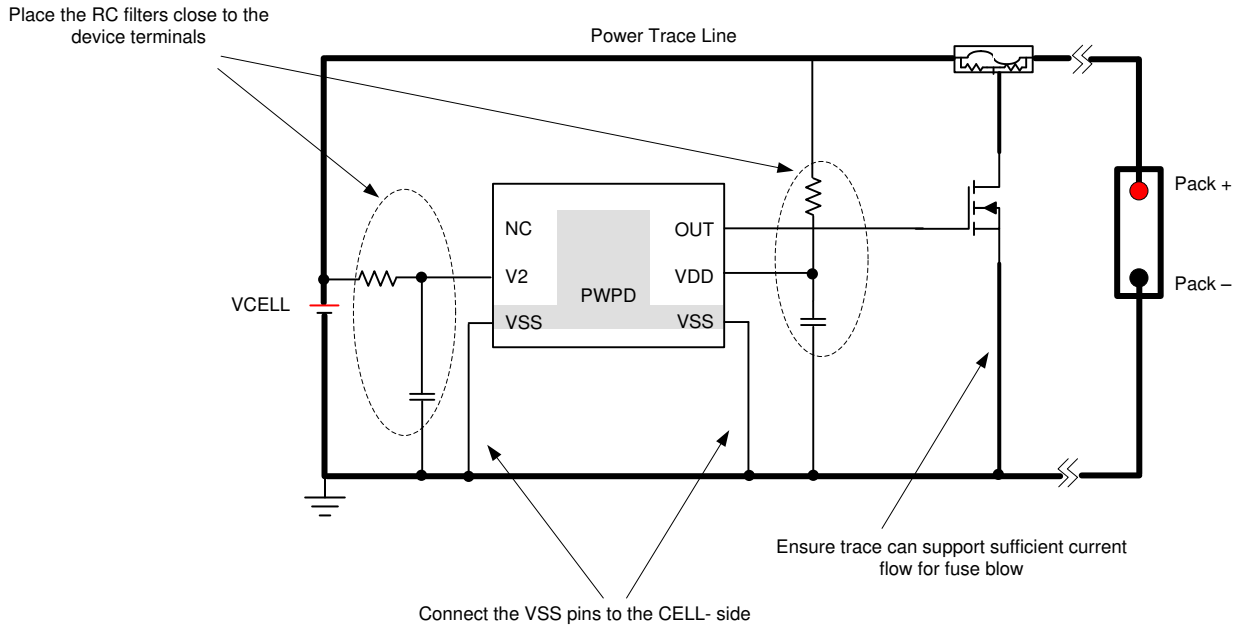

图 9-1. Layout Schematic

10 Device and Documentation Support

10.1 Device Support

10.1.1 第三方产品免责声明

TI 发布的与第三方产品或服务有关的信息，不能构成与此类产品或服务或保修的适用性有关的认可，不能构成此类产品或服务单独或与任何 TI 产品或服务一起的表示或认可。

10.2 Receiving Notification of Documentation Updates

To receive notification of documentation updates, navigate to the device product folder on ti.com. Click on *Subscribe to updates* to register and receive a weekly digest of any product information that has changed. For change details, review the revision history included in any revised document.

10.3 支持资源

TI E2E™ 支持论坛是工程师的重要参考资料，可直接从专家获得快速、经过验证的解答和设计帮助。搜索现有解答或提出自己的问题可获得所需的快速设计帮助。

链接的内容由各个贡献者“按原样”提供。这些内容并不构成 TI 技术规范，并且不一定反映 TI 的观点；请参阅 TI 的《使用条款》。

10.4 Trademarks

TI E2E™ is a trademark of Texas Instruments.
所有商标均为其各自所有者的财产。

10.5 Electrostatic Discharge Caution

This integrated circuit can be damaged by ESD. Texas Instruments recommends that all integrated circuits be handled with appropriate precautions. Failure to observe proper handling and installation procedures can cause damage.

ESD damage can range from subtle performance degradation to complete device failure. Precision integrated circuits may be more susceptible to damage because very small parametric changes could cause the device not to meet its published specifications.

10.6 Glossary

TI Glossary	This glossary lists and explains terms, acronyms, and definitions.

11 Mechanical, Packaging, and Orderable Information

The following pages include mechanical, packaging, and orderable information. This information is the most current data available for the designated devices. This data is subject to change without notice and revision of this document. For browser-based versions of this data sheet, refer to the left-hand navigation.

Copyright © 2021 Texas Instruments Incorporated

重要声明和免责声明

TI 提供技术和可靠性数据（包括数据表）、设计资源（包括参考设计）、应用或其他设计建议、网络工具、安全信息和其他资源，不保证没有瑕疵且不做出任何明示或暗示的担保，包括但不限于对适销性、某特定用途方面的适用性或不侵犯任何第三方知识产权的暗示担保。

这些资源可供使用 TI 产品进行设计的熟练开发人员使用。您将自行承担以下全部责任：(1) 针对您的应用选择合适的 TI 产品，(2) 设计、验证并测试您的应用，(3) 确保您的应用满足相应标准以及任何其他安全、安保或其他要求。这些资源如有变更，恕不另行通知。TI 授权您仅可将这些资源用于研发本资源所述的 TI 产品的应用。严禁对这些资源进行其他复制或展示。您无权使用任何其他 TI 知识产权或任何第三方知识产权。您应全额赔偿因在这些资源的使用中对 TI 及其代表造成的任何索赔、损害、成本、损失和债务，TI 对此概不负责。

TI 提供的产品受 TI 的销售条款 (https:www.ti.com/legal/termsofsale.html) 或 ti.com 上其他适用条款/TI 产品随附的其他适用条款的约束。TI 提供这些资源并不会扩展或以其他方式更改 TI 针对 TI 产品发布的适用的担保或担保免责声明。

邮寄地址：Texas Instruments, Post Office Box 655303, Dallas, Texas 75265
Copyright © 2021，德州仪器 (TI) 公司

PACKAGING INFORMATION

Orderable Device	Status (1)	Package Type	Package Drawing	Pins	Package Qty	Eco Plan (2)	Lead finish/ Ball material (6)	MSL Peak Temp (3)	Op Temp (°C)	Device Marking (4/5)	Samples
BQ294502DRVR	ACTIVE	WSON	DRV	6	3000	RoHS & Green	NIPDAU	Level-2-260C-1 YEAR	-40 to 85	4502	Samples
BQ294502DRVT	ACTIVE	WSON	DRV	6	250	RoHS & Green	NIPDAU	Level-2-260C-1 YEAR	-40 to 85	4502	Samples
BQ294504DRVR	ACTIVE	WSON	DRV	6	3000	RoHS & Green	NIPDAU	Level-2-260C-1 YEAR	-40 to 85	4504	Samples
BQ294504DRVT	ACTIVE	WSON	DRV	6	250	RoHS & Green	NIPDAU	Level-2-260C-1 YEAR	-40 to 85	4504	Samples
BQ294506DRVR	ACTIVE	WSON	DRV	6	3000	RoHS & Green	NIPDAU	Level-2-260C-1 YEAR	-40 to 85	4506	Samples
BQ294506DRVT	ACTIVE	WSON	DRV	6	250	RoHS & Green	NIPDAU	Level-2-260C-1 YEAR	-40 to 85	4506	Samples
BQ294512DRVR	ACTIVE	WSON	DRV	6	3000	RoHS & Green	NIPDAU	Level-2-260C-1 YEAR	-40 to 85	4512	Samples
BQ294512DRVT	ACTIVE	WSON	DRV	6	250	RoHS & Green	NIPDAU	Level-2-260C-1 YEAR	-40 to 85	4512	Samples
BQ294522DRVR	ACTIVE	WSON	DRV	6	3000	RoHS & Green	NIPDAU	Level-2-260C-1 YEAR	-40 to 85	4522	Samples
BQ294522DRVT	ACTIVE	WSON	DRV	6	250	RoHS & Green	NIPDAU	Level-2-260C-1 YEAR	-40 to 85	4522	Samples
BQ294524DRVR	ACTIVE	WSON	DRV	6	3000	RoHS & Green	NIPDAU	Level-2-260C-1 YEAR	-40 to 85	4524	Samples
BQ294524DRVT	ACTIVE	WSON	DRV	6	250	RoHS & Green	NIPDAU	Level-2-260C-1 YEAR	-40 to 85	4524	Samples
BQ294532DRVR	ACTIVE	WSON	DRV	6	3000	RoHS & Green	NIPDAU	Level-2-260C-1 YEAR	-40 to 85	4532	Samples
BQ294532DRVT	ACTIVE	WSON	DRV	6	250	RoHS & Green	NIPDAU	Level-2-260C-1 YEAR	-40 to 85	4532	Samples
BQ294533DRVR	ACTIVE	WSON	DRV	6	3000	RoHS & Green	NIPDAU	Level-2-260C-1 YEAR	-40 to 85	4533	Samples
BQ294533DRVT	ACTIVE	WSON	DRV	6	250	RoHS & Green	NIPDAU	Level-2-260C-1 YEAR	-40 to 85	4533	Samples
BQ294582DRVR	ACTIVE	WSON	DRV	6	3000	RoHS & Green	NIPDAU	Level-2-260C-1 YEAR	-40 to 85	4582	Samples
BQ294582DRVT	ACTIVE	WSON	DRV	6	250	RoHS & Green	NIPDAU	Level-2-260C-1 YEAR	-40 to 85	4582	Samples
BQ294592DRVR	ACTIVE	WSON	DRV	6	3000	RoHS & Green	NIPDAU	Level-2-260C-1 YEAR	-40 to 85	4592	Samples
BQ294592DRVT	ACTIVE	WSON	DRV	6	250	RoHS & Green	NIPDAU	Level-2-260C-1 YEAR	-40 to 85	4592	Samples

(1) The marketing status values are defined as follows:
ACTIVE: Product device recommended for new designs.
LIFEBUY: TI has announced that the device will be discontinued, and a lifetime-buy period is in effect.
NRND: Not recommended for new designs. Device is in production to support existing customers, but TI does not recommend using this part in a new design.
PREVIEW: Device has been announced but is not in production. Samples may or may not be available.
OBSOLETE: TI has discontinued the production of the device.

(2) **RoHS:** TI defines "RoHS" to mean semiconductor products that are compliant with the current EU RoHS requirements for all 10 RoHS substances, including the requirement that RoHS substance do not exceed 0.1% by weight in homogeneous materials. Where designed to be soldered at high temperatures, "RoHS" products are suitable for use in specified lead-free processes. TI may reference these types of products as "Pb-Free".
RoHS Exempt: TI defines "RoHS Exempt" to mean products that contain lead but are compliant with EU RoHS pursuant to a specific EU RoHS exemption.
Green: TI defines "Green" to mean the content of Chlorine (Cl) and Bromine (Br) based flame retardants meet JS709B low halogen requirements of <=1000ppm threshold. Antimony trioxide based flame retardants must also meet the <=1000ppm threshold requirement.

(3) MSL, Peak Temp. - The Moisture Sensitivity Level rating according to the JEDEC industry standard classifications, and peak solder temperature.

(4) There may be additional marking, which relates to the logo, the lot trace code information, or the environmental category on the device.

(5) Multiple Device Markings will be inside parentheses. Only one Device Marking contained in parentheses and separated by a "~" will appear on a device. If a line is indented then it is a continuation of the previous line and the two combined represent the entire Device Marking for that device.

(6) Lead finish/Ball material - Orderable Devices may have multiple material finish options. Finish options are separated by a vertical ruled line. Lead finish/Ball material values may wrap to two lines if the finish value exceeds the maximum column width.

Important Information and Disclaimer: The information provided on this page represents TI's knowledge and belief as of the date that it is provided. TI bases its knowledge and belief on information provided by third parties, and makes no representation or warranty as to the accuracy of such information. Efforts are underway to better integrate information from third parties. TI has taken and continues to take reasonable steps to provide representative and accurate information but may not have conducted destructive testing or chemical analysis on incoming materials and chemicals. TI and TI suppliers consider certain information to be proprietary, and thus CAS numbers and other limited information may not be available for release.

In no event shall TI's liability arising out of such information exceed the total purchase price of the TI part(s) at issue in this document sold by TI to Customer on an annual basis.

TAPE AND REEL INFORMATION

REEL DIMENSIONS

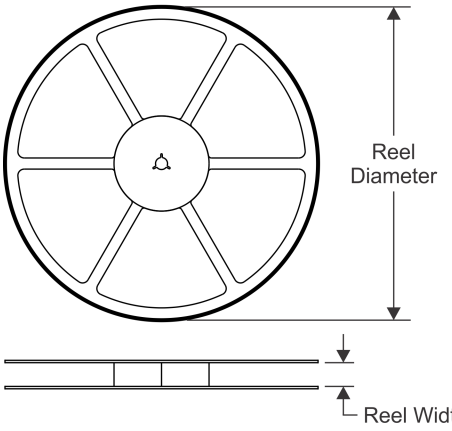

TAPE DIMENSIONS

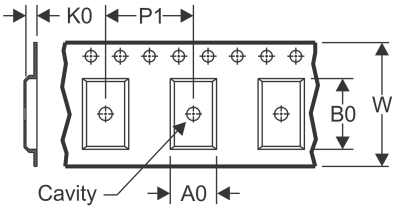

A0	Dimension designed to accommodate the component width
B0	Dimension designed to accommodate the component length
K0	Dimension designed to accommodate the component thickness
W	Overall width of the carrier tape
P1	Pitch between successive cavity centers

QUADRANT ASSIGNMENTS FOR PIN 1 ORIENTATION IN TAPE

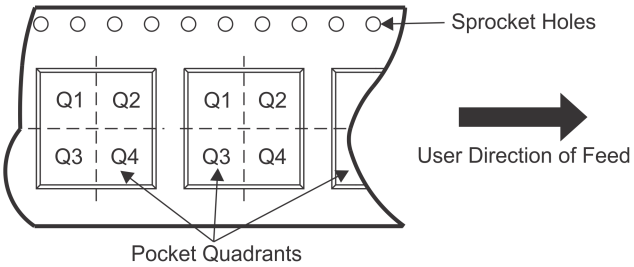

*All dimensions are nominal

Device	Package Type	Package Drawing	Pins	SPQ	Reel Diameter (mm)	Reel Width W1 (mm)	A0 (mm)	B0 (mm)	K0 (mm)	P1 (mm)	W (mm)	Pin1 Quadrant
BQ294502DRVR	WSON	DRV	6	3000	180.0	8.4	2.3	2.3	1.15	4.0	8.0	Q2
BQ294502DRVR	WSON	DRV	6	3000	180.0	8.4	2.3	2.3	1.15	4.0	8.0	Q2
BQ294502DRVT	WSON	DRV	6	250	180.0	8.4	2.3	2.3	1.15	4.0	8.0	Q2
BQ294502DRVT	WSON	DRV	6	250	180.0	8.4	2.3	2.3	1.15	4.0	8.0	Q2
BQ294504DRVR	WSON	DRV	6	3000	180.0	8.4	2.3	2.3	1.15	4.0	8.0	Q2
BQ294504DRVR	WSON	DRV	6	3000	180.0	8.4	2.3	2.3	1.15	4.0	8.0	Q2
BQ294504DRVT	WSON	DRV	6	250	180.0	8.4	2.3	2.3	1.15	4.0	8.0	Q2
BQ294504DRVT	WSON	DRV	6	250	180.0	8.4	2.3	2.3	1.15	4.0	8.0	Q2
BQ294506DRVR	WSON	DRV	6	3000	180.0	8.4	2.3	2.3	1.15	4.0	8.0	Q2
BQ294506DRVR	WSON	DRV	6	3000	180.0	8.4	2.3	2.3	1.15	4.0	8.0	Q2
BQ294506DRVT	WSON	DRV	6	250	180.0	8.4	2.3	2.3	1.15	4.0	8.0	Q2
BQ294506DRVT	WSON	DRV	6	250	180.0	8.4	2.3	2.3	1.15	4.0	8.0	Q2
BQ294512DRVR	WSON	DRV	6	3000	180.0	8.4	2.3	2.3	1.15	4.0	8.0	Q2
BQ294512DRVT	WSON	DRV	6	250	180.0	8.4	2.3	2.3	1.15	4.0	8.0	Q2
BQ294522DRVR	WSON	DRV	6	3000	180.0	8.4	2.3	2.3	1.15	4.0	8.0	Q2
BQ294522DRVT	WSON	DRV	6	250	180.0	8.4	2.3	2.3	1.15	4.0	8.0	Q2
BQ294524DRVR	WSON	DRV	6	3000	180.0	8.4	2.3	2.3	1.15	4.0	8.0	Q2
BQ294524DRVR	WSON	DRV	6	3000	180.0	8.4	2.3	2.3	1.15	4.0	8.0	Q2

Device	Package Type	Package Drawing	Pins	SPQ	Reel Diameter (mm)	Reel Width W1 (mm)	A0 (mm)	B0 (mm)	K0 (mm)	P1 (mm)	W (mm)	Pin1 Quadrant
BQ294524DRVT	WSON	DRV	6	250	180.0	8.4	2.3	2.3	1.15	4.0	8.0	Q2
BQ294524DRVT	WSON	DRV	6	250	180.0	8.4	2.3	2.3	1.15	4.0	8.0	Q2
BQ294532DRVR	WSON	DRV	6	3000	180.0	8.4	2.3	2.3	1.15	4.0	8.0	Q2
BQ294532DRVR	WSON	DRV	6	3000	180.0	8.4	2.3	2.3	1.15	4.0	8.0	Q2
BQ294532DRVT	WSON	DRV	6	250	180.0	8.4	2.3	2.3	1.15	4.0	8.0	Q2
BQ294532DRVT	WSON	DRV	6	250	180.0	8.4	2.3	2.3	1.15	4.0	8.0	Q2
BQ294533DRVR	WSON	DRV	6	3000	180.0	8.4	2.3	2.3	1.15	4.0	8.0	Q2
BQ294533DRVT	WSON	DRV	6	250	180.0	8.4	2.3	2.3	1.15	4.0	8.0	Q2
BQ294582DRVR	WSON	DRV	6	3000	180.0	8.4	2.3	2.3	1.15	4.0	8.0	Q2
BQ294582DRVR	WSON	DRV	6	3000	180.0	8.4	2.3	2.3	1.15	4.0	8.0	Q2
BQ294582DRVT	WSON	DRV	6	250	180.0	8.4	2.3	2.3	1.15	4.0	8.0	Q2
BQ294582DRVT	WSON	DRV	6	250	180.0	8.4	2.3	2.3	1.15	4.0	8.0	Q2
BQ294592DRVR	WSON	DRV	6	3000	180.0	8.4	2.3	2.3	1.15	4.0	8.0	Q2
BQ294592DRVR	WSON	DRV	6	3000	180.0	8.4	2.3	2.3	1.15	4.0	8.0	Q2
BQ294592DRVT	WSON	DRV	6	250	180.0	8.4	2.3	2.3	1.15	4.0	8.0	Q2
BQ294592DRVT	WSON	DRV	6	250	180.0	8.4	2.3	2.3	1.15	4.0	8.0	Q2

TAPE AND REEL BOX DIMENSIONS

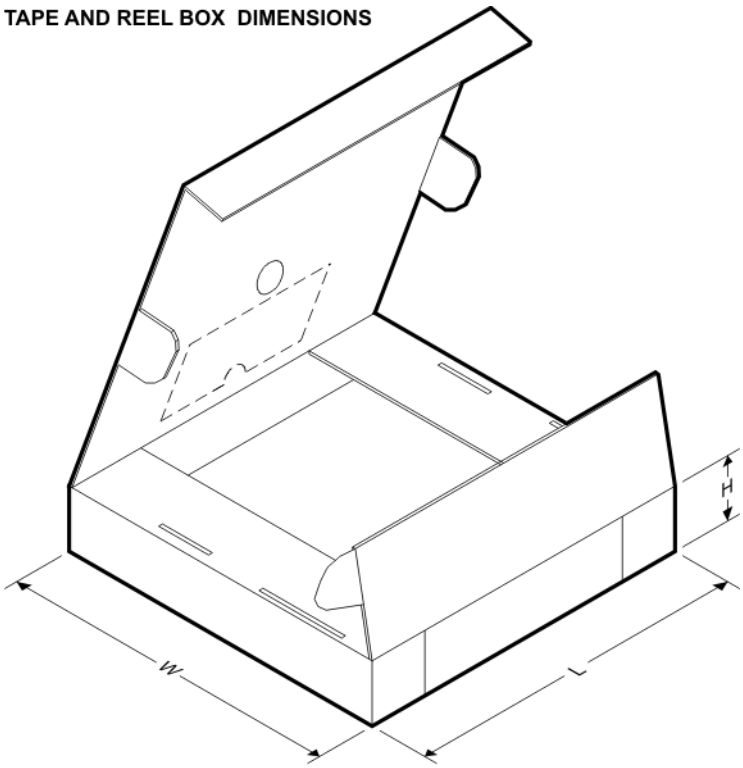

*All dimensions are nominal

Device	Package Type	Package Drawing	Pins	SPQ	Length (mm)	Width (mm)	Height (mm)
BQ294502DRVR	WSON	DRV	6	3000	210.0	185.0	35.0

Device	Package Type	Package Drawing	Pins	SPQ	Length (mm)	Width (mm)	Height (mm)
BQ294502DRVR	WSON	DRV	6	3000	210.0	185.0	35.0
BQ294502DRVT	WSON	DRV	6	250	210.0	185.0	35.0
BQ294502DRVT	WSON	DRV	6	250	210.0	185.0	35.0
BQ294504DRVR	WSON	DRV	6	3000	210.0	185.0	35.0
BQ294504DRVR	WSON	DRV	6	3000	210.0	185.0	35.0
BQ294504DRVT	WSON	DRV	6	250	210.0	185.0	35.0
BQ294504DRVT	WSON	DRV	6	250	210.0	185.0	35.0
BQ294506DRVR	WSON	DRV	6	3000	210.0	185.0	35.0
BQ294506DRVR	WSON	DRV	6	3000	210.0	185.0	35.0
BQ294506DRVT	WSON	DRV	6	250	210.0	185.0	35.0
BQ294506DRVT	WSON	DRV	6	250	210.0	185.0	35.0
BQ294512DRVR	WSON	DRV	6	3000	210.0	185.0	35.0
BQ294512DRVT	WSON	DRV	6	250	210.0	185.0	35.0
BQ294522DRVR	WSON	DRV	6	3000	210.0	185.0	35.0
BQ294522DRVT	WSON	DRV	6	250	210.0	185.0	35.0
BQ294524DRVR	WSON	DRV	6	3000	210.0	185.0	35.0
BQ294524DRVR	WSON	DRV	6	3000	210.0	185.0	35.0
BQ294524DRVT	WSON	DRV	6	250	210.0	185.0	35.0
BQ294524DRVT	WSON	DRV	6	250	210.0	185.0	35.0
BQ294532DRVR	WSON	DRV	6	3000	210.0	185.0	35.0
BQ294532DRVR	WSON	DRV	6	3000	210.0	185.0	35.0
BQ294532DRVT	WSON	DRV	6	250	210.0	185.0	35.0
BQ294532DRVT	WSON	DRV	6	250	210.0	185.0	35.0
BQ294533DRVR	WSON	DRV	6	3000	210.0	185.0	35.0
BQ294533DRVT	WSON	DRV	6	250	210.0	185.0	35.0
BQ294582DRVR	WSON	DRV	6	3000	210.0	185.0	35.0
BQ294582DRVR	WSON	DRV	6	3000	210.0	185.0	35.0
BQ294582DRVT	WSON	DRV	6	250	210.0	185.0	35.0
BQ294582DRVT	WSON	DRV	6	250	210.0	185.0	35.0
BQ294592DRVR	WSON	DRV	6	3000	210.0	185.0	35.0
BQ294592DRVR	WSON	DRV	6	3000	210.0	185.0	35.0
BQ294592DRVT	WSON	DRV	6	250	210.0	185.0	35.0
BQ294592DRVT	WSON	DRV	6	250	210.0	185.0	35.0

DRV 6 WSON - 0.8 mm max height

PLASTIC SMALL OUTLINE - NO LEAD

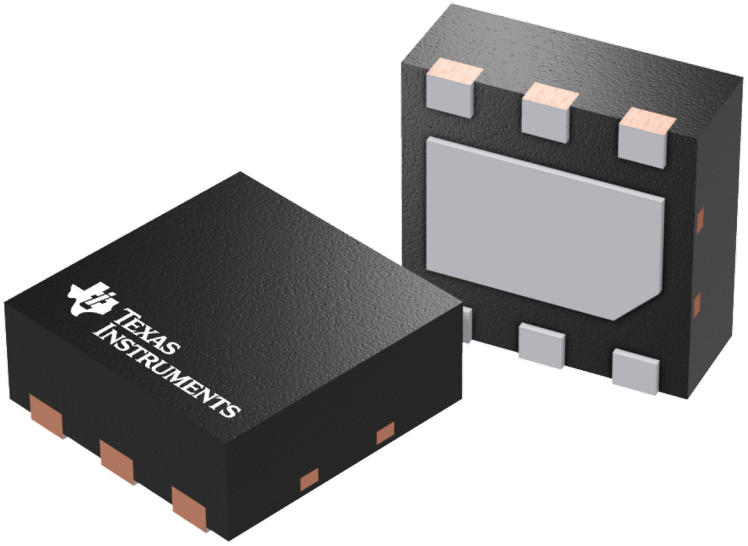

Images above are just a representation of the package family, actual package may vary.
Refer to the product data sheet for package details.

TEXAS INSTRUMENTS

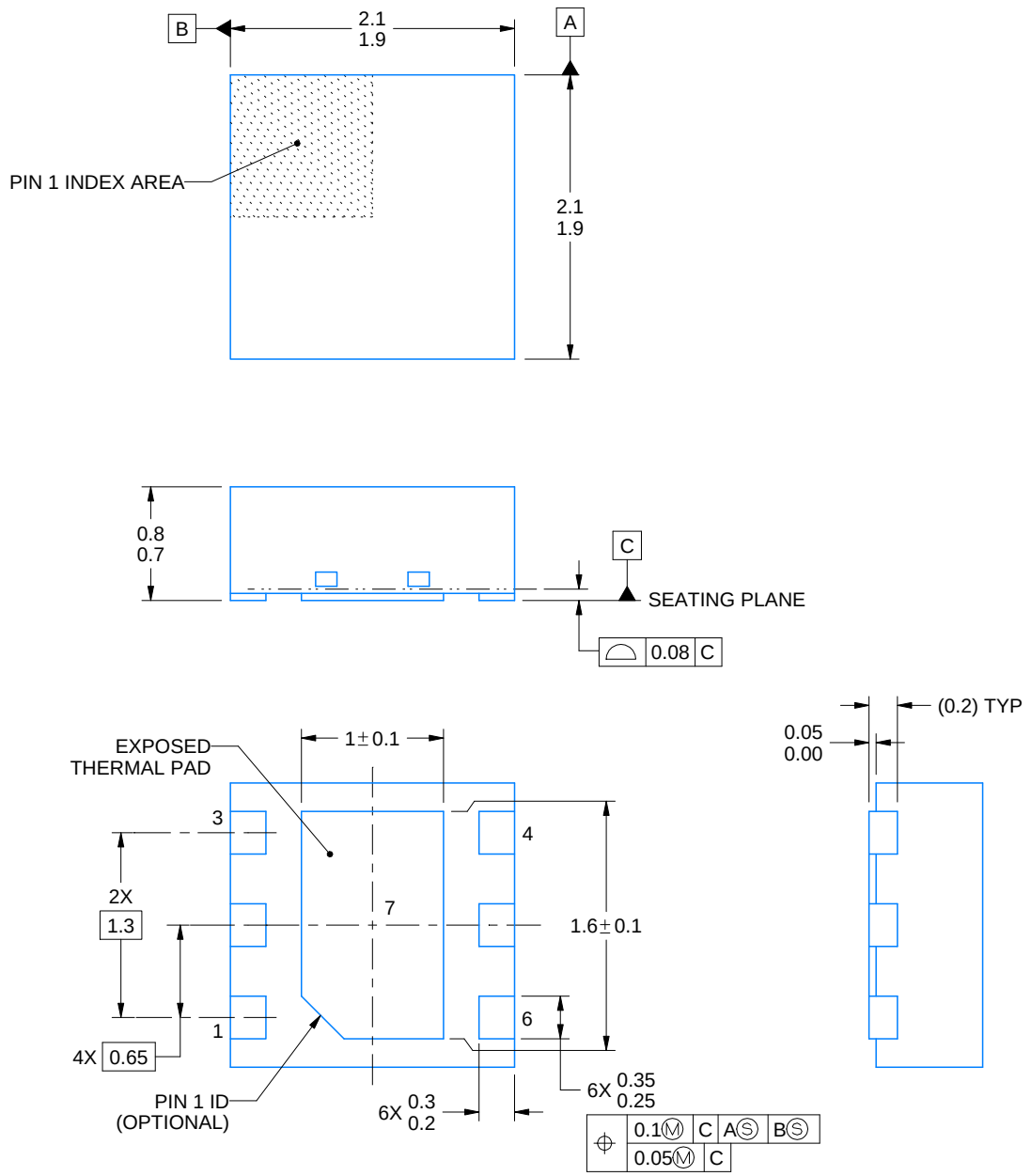

NOTES:

1. All linear dimensions are in millimeters. Any dimensions in parenthesis are for reference only. Dimensioning and tolerancing per ASME Y14.5M.
2. This drawing is subject to change without notice.
3. The package thermal pad must be soldered to the printed circuit board for thermal and mechanical performance.

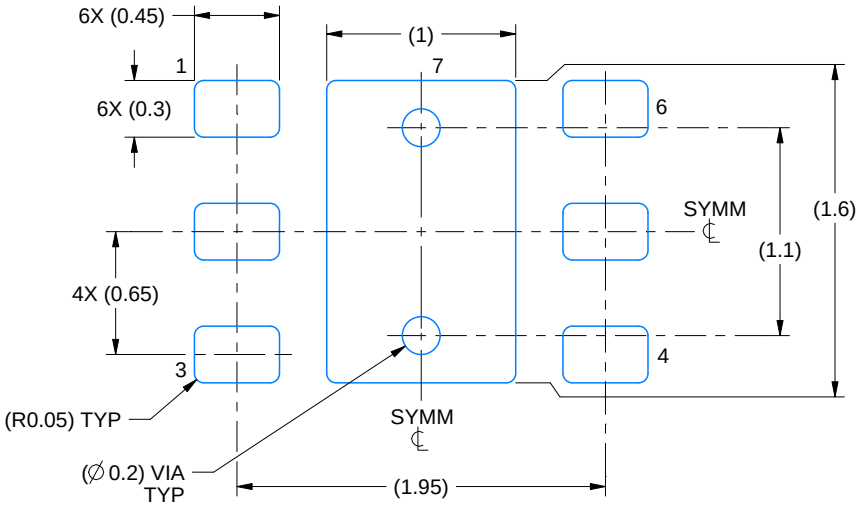

LAND PATTERN EXAMPLE
SCALE:25X

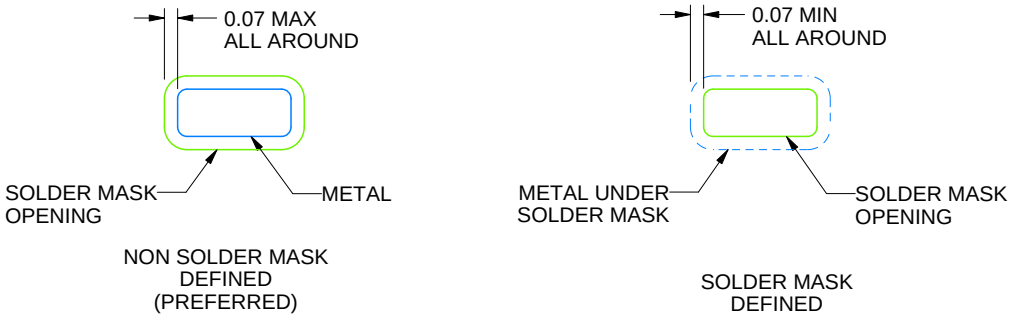

SOLDER MASK DETAILS

4222173/B 04/2018

NOTES: (continued)

4. This package is designed to be soldered to a thermal pad on the board. For more information, see Texas Instruments literature number SLUA271 (www.ti.com/lit/slua271).
5. Vias are optional depending on application, refer to device data sheet. If some or all are implemented, recommended via locations are shown.

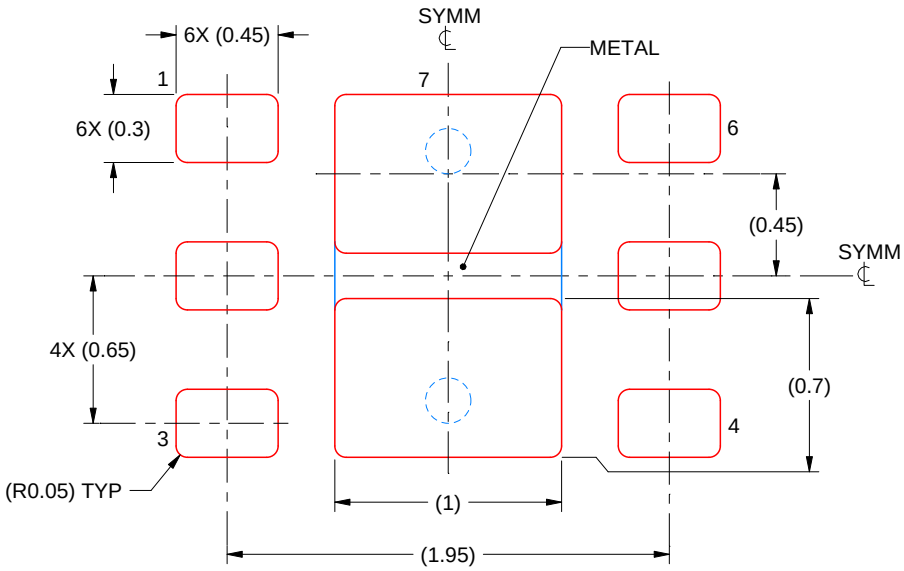

SOLDER PASTE EXAMPLE
BASED ON 0.125 mm THICK STENCIL

EXPOSED PAD #7
88% PRINTED SOLDER COVERAGE BY AREA UNDER PACKAGE
SCALE:30X

4222173/B 04/2018

NOTES: (continued)

6. Laser cutting apertures with trapezoidal walls and rounded corners may offer better paste release. IPC-7525 may have alternate design recommendations.

重要声明和免责声明

TI 提供技术和可靠性数据（包括数据表）、设计资源（包括参考设计）、应用或其他设计建议、网络工具、安全信息和其他资源，不保证没有瑕疵且不做出任何明示或暗示的担保，包括但不限于对适销性、某特定用途方面的适用性或不侵犯任何第三方知识产权的暗示担保。

这些资源可供使用 TI 产品进行设计的熟练开发人员使用。您将自行承担以下全部责任：(1) 针对您的应用选择合适的 TI 产品，(2) 设计、验证并测试您的应用，(3) 确保您的应用满足相应标准以及任何其他安全、安保或其他要求。这些资源如有变更，恕不另行通知。TI 授权您仅可将这些资源用于研发本资源所述的 TI 产品的应用。严禁对这些资源进行其他复制或展示。您无权使用任何其他 TI 知识产权或任何第三方知识产权。您应全额赔偿因在这些资源的使用中对 TI 及其代表造成的任何索赔、损害、成本、损失和债务，TI 对此概不负责。

TI 提供的产品受 TI 的销售条款 (https:www.ti.com.cn/zh-cn/legal/termsofsale.html) 或 ti.com.cn 上其他适用条款/TI 产品随附的其他适用条款的约束。TI 提供这些资源并不会扩展或以其他方式更改 TI 针对 TI 产品发布的适用的担保或担保免责声明。

邮寄地址：上海市浦东新区世纪大道 1568 号中建大厦 32 楼，邮政编码：200122
Copyright © 2021 德州仪器半导体技术（上海）有限公司