INAx290 2.7V 至 120V、1.1MHz 超精密电流检测放大器

1 特性

- 宽共模电压：
  - 工作电压：2.7V 至 120V
  - 可承受电压：-20V 至 +122V
- 出色的共模抑制比 (CMRR)：
  - 160dB 直流
  - 85dB 交流（50kHz 时）
- 精度
  - 增益：
    - 增益误差：±0.1%（最大值）
    - 增益漂移：±5ppm/°C（最大值）
  - 失调电压：
    - 失调电压：±12μV（最大值）
    - 温漂：±0.2μV/°C（最大值）
- 可用增益：
  - A1 器件：20V/V
  - A2 器件：50V/V
  - A3 器件：100V/V
  - A4 器件：200V/V
  - A5 器件：500V/V
- 高带宽：1.1MHz
- 压摆率：2V/μs
- 静态电流：370μA（每通道）

2 应用

- 有源天线系统 mMIMO (AAS)
- 宏远程无线电单元 (RRU)
- 48V 机架式服务器
- 48V 商用网络和服务器电源
- 测试和测量

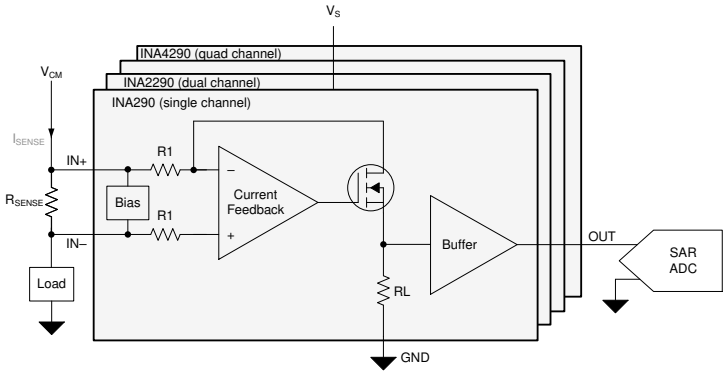

典型应用

3 说明

INAx290 是一款超精密电流检测放大器，可在 2.7V 至 120V 的宽共模范围内测量分流电阻器上的压降。该器件在 ±12μV（最大值）的超低失调电压、±0.1%（最大值）的小增益误差和 160dB（典型值）的高直流 CMRR 等特性的综合作用下，可实现超高精度的电流测量精度。INAx290 凭借 1.1MHz（增益为 20V/V）的高带宽和 85dB（50kHz 时）的交流 CMRR，不仅适用于直流电流测量，还适用于高速应用（例如，快速过流保护）。

INAx290 通过在 2.7V 至 120V 的宽共模范围内测量分流电阻器上的压降，可提供进行超精密电流测量的功能。INAx290 器件采用十分节省空间的封装。单通道 INA290 器件采用 SC-70 封装，双通道 INA2290 器件采用 MSOP-8 封装，而四通道 INA4290 器件采用 4mm x 4mm 的 QFN 封装。

INAx290 由一个 2.7V 至 20V 的单电源供电，单通道器件每通道仅消耗 370 μA 的电源电流（典型值）。这些器件具有五个增益选项：20V/V、50V/V、100V/V、200V/V 和 500V/V。借助零漂移架构的低失调电压，可在扩展工作温度范围（-40°C 至 +125°C）内使用低欧姆值分流器进行电流感应。

器件信息(1)

器件型号	封装	封装尺寸（标称值）
INA290	SC-70 (5)	2.00mm × 1.25mm
INA2290	VSSOP (8)	3.00mm × 3.00mm
INA4290	QFN (16)	4.00mm × 4.00mm

(1) 如需了解所有可用封装，请参阅数据表末尾的封装选项附录。

本文档旨在为方便起见，提供有关 TI 产品中文版本的信息，以确认产品的概要。有关适用的官方英文版本的最新信息，请访问 www.ti.com，其内容始终优先。TI 不保证翻译的准确性和有效性。在实际设计之前，请务必参考最新版本的英文版本。

Table of Contents

1 特性 1
2 应用 1
3 说明 1
4 Revision History 2
5 Pin Configuration and Functions 3
6 Specifications 5
6.1 Absolute Maximum Ratings 5
6.2 ESD Ratings 5
6.3 Recommended Operating Conditions 5
6.4 Thermal Information 5
6.5 Electrical Characteristics 6
6.6 Typical Characteristics 7
7 Detailed Description 15
7.1 Overview 15
7.2 Functional Block Diagram 15
7.3 Feature Description 16
7.4 Device Functional Modes 18
8 Application and Implementation 19
8.1 Application Information 19
8.2 Typical Application 21
9 Power Supply Recommendations 23
10 Layout 23
10.1 Layout Guidelines 23
10.2 Layout Examples 23
11 Device and Documentation Support 26
11.1 Documentation Support 26
11.2 接收文档更新通知 26
11.3 支持资源 26
11.4 Trademarks 26
11.5 静电放电警告 26
11.6 术语表 26
12 Mechanical, Packaging, and Orderable Information 26

4 Revision History

注：以前版本的页码可能与当前版本的页码不同

Changes from Revision B (December 2020) to Revision C (June 2021) — **Page**

- 向文档添加了 INA4290 器件信息 1

Changes from Revision A (September 2020) to Revision B (December 2020) — **Page**

- 将 INA2290 器件状态从“预告信息”更改为“量产数据” 1
- Added 图 6-44 7

Changes from Revision * (June 2020) to Revision A (August 2020) — **Page**

- 将数据表状态从“生产数据”更改为“混合生产” 1
- 向文档添加了 INA2290 预告信息 1

Copyright © 2021 Texas Instruments Incorporated

5 Pin Configuration and Functions

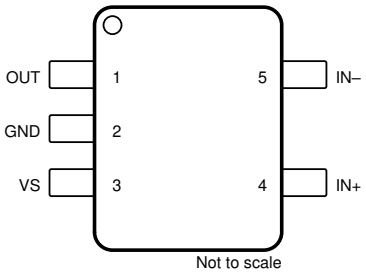

图 5-1. INA290: DCK Package 5-Pin SC-70 Top View

表 5-1. Pin Functions: INA290 (Single Channel)

PIN		TYPE	DESCRIPTION
NAME	NO.		
GND	2	Ground	Ground
IN –	5	Input	Connect to load side of shunt resistor.
IN+	4	Input	Connect to supply side of shunt resistor.
OUT	1	Output	Output voltage
VS	3	Power	Power supply

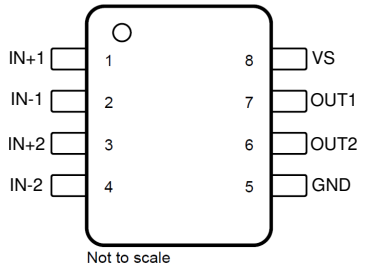

图 5-2. INA2290: DGK Package 8-Pin VSSOP Top View

表 5-2. Pin Functions: INA2290 (Dual Channel)

PIN		TYPE	DESCRIPTION
NAME	NO.		
GND	5	Ground	Ground
IN – 1	2	Input	Current-sense amplifier negative input for channel 1. Connect to load side of channel 1 sense resistor.
IN+1	1	Input	Current-sense amplifier positive input for channel 1. Connect to bus-voltage side of channel 1 sense resistor.
IN – 2	4	Input	Current-sense amplifier negative input for channel 2. Connect to load side of channel 2 sense resistor.
IN+2	3	Input	Current-sense amplifier positive input for channel 2. Connect to bus-voltage side of channel 2 sense resistor.
OUT1	7	Output	Channel 1 output voltage
OUT2	6	Output	Channel 2 output voltage
VS	8	Power	Power supply

Copyright © 2021 Texas Instruments Incorporated

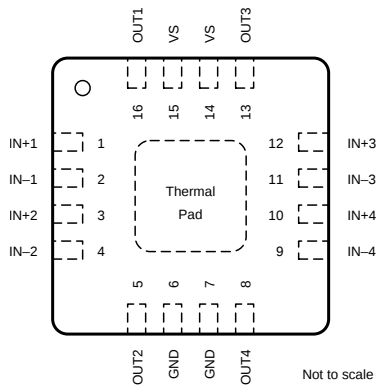

A. Thermal Pad can be left floating or connected to GND.

图 5-3. INA4290: RGV Package 16-Pin QFN Top View

表 5-3. Pin Functions: INA4290 (Quad Channel)

PIN		TYPE	DESCRIPTION
NAME	NO.		
GND	6, 7	Ground	Ground
IN – 1	2	Input	Current-sense amplifier negative input for channel 1. Connect to load side of channel-1 sense resistor.
IN+1	1	Input	Current-sense amplifier positive input for channel 1. Connect to bus-voltage side of channel-1 sense resistor.
IN – 2	4	Input	Current-sense amplifier negative input for channel 2. Connect to load side of channel-2 sense resistor.
IN+2	3	Input	Current-sense amplifier positive input for channel 2. Connect to bus-voltage side of channel-2 sense resistor.
IN – 3	11	Input	Current-sense amplifier negative input for channel 3. Connect to load side of channel-3 sense resistor.
IN+3	12	Input	Current-sense amplifier positive input for channel 3. Connect to bus-voltage side of channel-3 sense resistor.
IN – 4	9	Input	Current-sense amplifier negative input for channel 4. Connect to load side of channel-4 sense resistor.
IN+4	10	Input	Current-sense amplifier positive input for channel 4. Connect to bus-voltage side of channel-4 sense resistor.
OUT1	16	Output	Channel 1 output voltage
OUT2	5	Output	Channel 2 output voltage
OUT3	13	Output	Channel 3 output voltage
OUT4	8	Output	Channel 4 output voltage
VS	14, 15	Power	Power supply

Copyright © 2021 Texas Instruments Incorporated

6 Specifications

6.1 Absolute Maximum Ratings

over operating free-air temperature range (unless otherwise noted)(1)

		MIN	MAX	UNIT
V_S	Supply voltage	–0.3	22	V
V_{IN+}, V_{IN-} (2)	Analog inputs, differential (V_{IN+}) – (V_{IN-})	–30	30	V
	Analog inputs, common mode (V_{IN+} or V_{IN-})	–20	122	
V_{OUTx}	Analog outputs, output voltage	GND – 0.3	Vs + 0.3	V
T_A	Operating temperature	–55	150	°C
T_J	Junction temperature		150	°C
T_{stg}	Storage temperature	–65	150	°C

(1) Stresses beyond those listed under Absolute Maximum Ratings may cause permanent damage to the device. These are stress ratings only, which do not imply functional operation of the device at these or any other conditions beyond those indicated under Recommended Operating Conditions. Exposure to absolute-maximum-rated conditions for extended periods may affect device reliability.
(2) VIN+ and VIN – are the voltages at the VIN+ and VIN – pins, respectively.

6.2 ESD Ratings

			VALUE	UNIT
$V_{(ESD)}$	Electrostatic discharge	Human body model (HBM), per ANSI/ESDA/JEDEC JS-001, all pins(1)	±2000	V
		Charged device model (CDM), per JEDEC specification JESD22-C101, all pins(2)	±1000	V

(1) JEDEC document JEP155 states that 500-V HBM allows safe manufacturing with a standard ESD control process.
(2) JEDEC document JEP157 states that 250-V CDM allows safe manufacturing with a standard ESD control process.

6.3 Recommended Operating Conditions

over operating free-air temperature range (unless otherwise noted)

		MIN	NOM	MAX	UNIT
V_{CM}	Common-mode input range(1)	V_S	48	120	V
V_S	Operating supply range	2.7	5	20	V
T_A	Ambient temperature	–40		125	°C

(1) Common-mode voltage can go below V_S under certain conditions. See 图 7-1 for additional information on operating range.

6.4 Thermal Information

THERMAL METRIC(1)		INA4290 RGV (QFN) 16 PINS	INA2290 DGK (VSSOP) 8 PINS	INA290 DCK (SC-70) 5 PINS	UNIT
$R_{\theta JA}$	Junction-to-ambient thermal resistance	45.9	169.3	191.6	°C/W
$R_{\theta JC(top)}$	Junction-to-case (top) thermal resistance	41.6	60.1	144.4	°C/W
$R_{\theta JB}$	Junction-to-board thermal resistance	21.0	91.3	69.2	°C/W
Ψ_{JT}	Junction-to-top characterization parameter	1.0	8.3	46.2	°C/W
Ψ_{JB}	Junction-to-board characterization parameter	21.0	89.7	69.0	°C/W
$R_{\theta JC(bot)}$	Junction-to-case (bottom) thermal resistance	6.4	N/A	N/A	°C/W

(1) For more information about traditional and new thermal metrics, see the Semiconductor and IC Package Thermal Metrics application report.

Copyright © 2021 Texas Instruments Incorporated

6.5 Electrical Characteristics

at T_A = 25 °C, V_S = 5 V, V_{SENSE} = V_{IN+} – V_{IN-} = 0.5 V / Gain, V_{CM} = V_{IN-} = 48 V (unless otherwise noted)

PARAMETER		TEST CONDITIONS	MIN	TYP	MAX	UNIT
INPUT						
CMRR	Common-mode rejection ratio	V_{CM} = 2.7 V to 120 V, T_A = –40°C to +125°C	140	160		dB
		f = 50 kHz		85		
V_{os}	Offset voltage, input referred	A1 devices, INA290, INA2290		6	±25	µV
		A1 devices, INA4290		6	±32	
		A2 devices		3	±20	
		A3 devices		3	±15	
		A4, A5 devices		2	±12	
dV_{os}/dT	Offset voltage drift	T_A = –40°C to +125°C			0.2	µV/℃
PSRR	Power supply rejection ratio, input referred	V_S = 2.7 V to 20 V, T_A = –40°C to +125°C		0.05	±0.5	µV/V
I_B	Input bias current	I_{B+}, V_{SENSE} = 0 mV	10	20	30	µA
		I_{B-}, V_{SENSE} = 0 mV	10	20	30	
OUTPUT						
G	Gain	A1 devices		20		V/V
		A2 devices		50		
		A3 devices		100		
		A4 devices		200		
		A5 devices		500		
	Gain error	A1, A2, A3 devices, GND + 50 mV ≤ V_{OUT} ≤ V_S – 200 mV		0.02	±0.1	%
		A4, A5 devices, GND + 50 mV ≤ V_{OUT} ≤ V_S – 200 mV		0.02	±0.15	
	Gain error drift	T_A = –40°C to +125°C		1.5	5	ppm/°C
	Nonlinearity error			0.01		%
	Maximum capacitive load	No sustained oscillations, no isolation resistor		500		pF
VOLTAGE OUTPUT						
	Swing to V_S power supply rail	R_{LOAD} = 10 kΩ, T_A = –40°C to +125°C		V_S – 0.07	V_S – 0.2	V
	Swing to ground	R_{LOAD} = 10 kΩ, V_{SENSE} = 0 V, T_A = –40°C to +125°C		0.005	0.025	V
FREQUENCY RESPONSE						
BW	Bandwidth	A1 devices, C_{LOAD} = 5 pF, V_{SENSE} = 200 mV		1100		kHz
		A2 devices, C_{LOAD} = 5 pF, V_{SENSE} = 80 mV		1100		
		A3 devices, C_{LOAD} = 5 pF, V_{SENSE} = 40 mV		900		
		A4 devices, C_{LOAD} = 5 pF, V_{SENSE} = 20 mV		850		
		A5 devices, C_{LOAD} = 5 pF, V_{SENSE} = 8 mV		800		
SR	Slew rate			2		V/µs
	Settling time	V_{OUT} = 4 V ± 0.1 V step, output settles to 0.5%		9		µs
		V_{OUT} = 4 V ± 0.1 V step, output settles to 1%		5		
NOISE						
Ve_n	Voltage noise density			50		nV/√Hz

Copyright © 2021 Texas Instruments Incorporated

at T_A = 25 °C, V_S = 5 V, V_{SENSE} = V_{IN+} – V_{IN-} = 0.5 V / Gain, V_{CM} = V_{IN-} = 48 V (unless otherwise noted)

PARAMETER		TEST CONDITIONS	MIN	TYP	MAX	UNIT
POWER SUPPLY						
V_S	Supply voltage	T_A = –40°C to+125°C	2.7		20	V
I_Q	Quiescent current, INA290			370	500	µA
		T_A = –40°C to +125°C			600	
I_Q	Quiescent current, INA2290			680	900	µA
		T_A = –40°C to +125°C			1200	
I_Q	Quiescent current, INA4290			1250	1600	µA
		T_A = –40°C to +125°C			1800	

6.6 Typical Characteristics

al specifications at T_A = 25°C, V_S = 5 V, V_{SENSE} = V_{IN+} – V_{IN-} = 0.5 V / Gain, and V_{CM} = V_{IN-} = 48 V (unless otherwise noted).

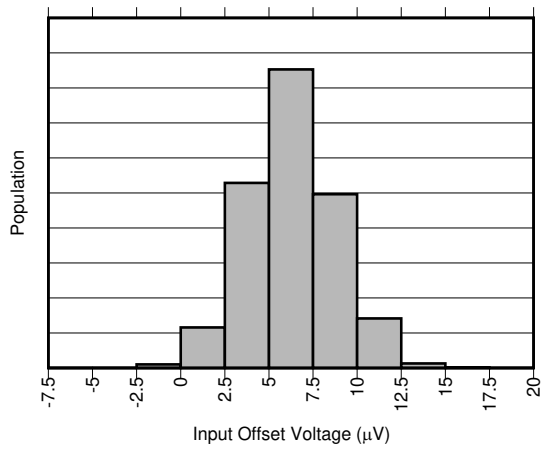

图 6-1. Input Offset Production Distribution, A1 Devices

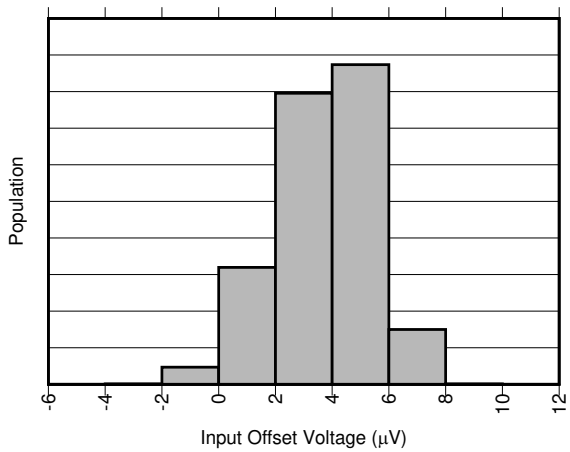

图 6-2. Input Offset Production Distribution, A2 Devices

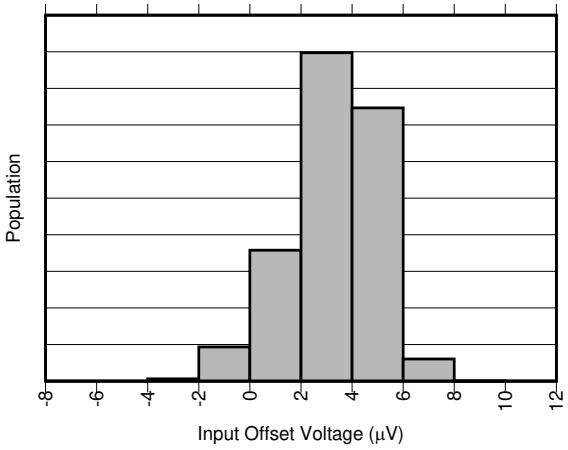

图 6-3. Input Offset Production Distribution, A3 Devices

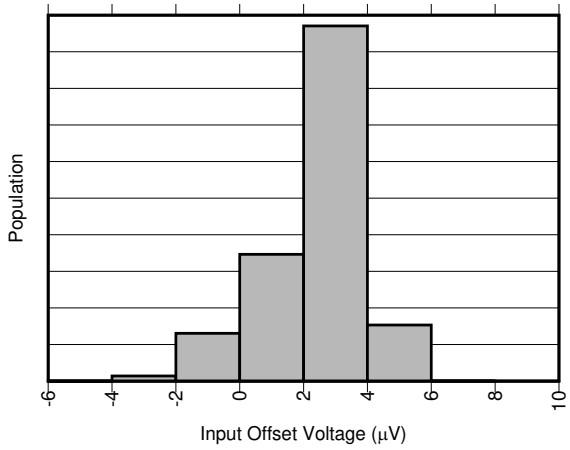

图 6-4. Input Offset Production Distribution, A4 Devices

Copyright © 2021 Texas Instruments Incorporated

6.6 Typical Characteristics (continued)

al specifications at T_A = 25°C, V_S = 5 V, V_{SENSE} = V_{IN+} – V_{IN-} = 0.5 V / Gain, and V_{CM} = V_{IN-} = 48 V (unless otherwise noted).

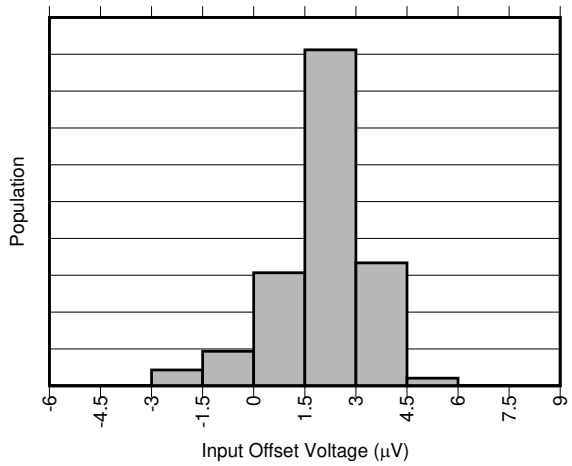

图 6-5. Input Offset Production Distribution, A5 Devices

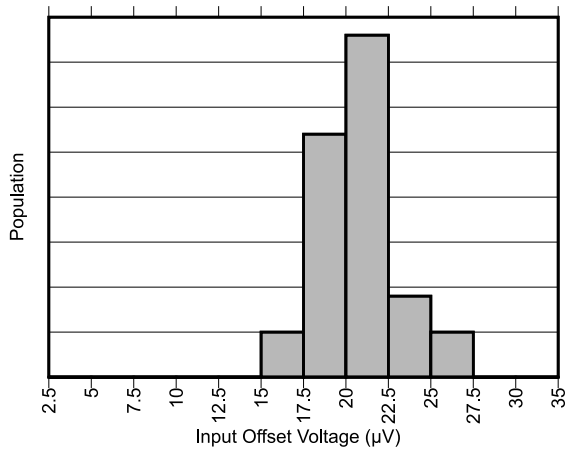

图 6-6. Input Offset Production Distribution, A1 Devices (INA4290)

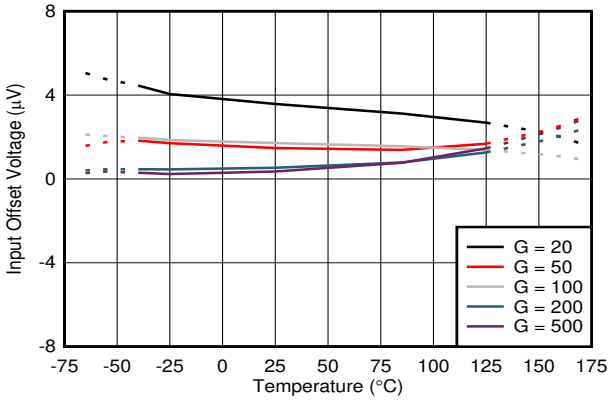

图 6-7. Input Offset Voltage vs. Temperature

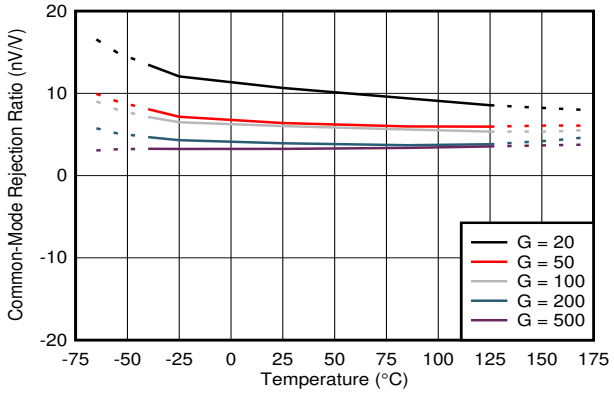

图 6-8. Common-Mode Rejection Ratio vs. Temperature

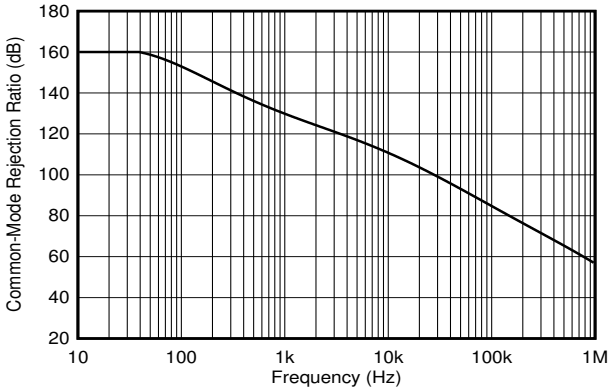

图 6-9. Common-Mode Rejection Ratio vs. Frequency

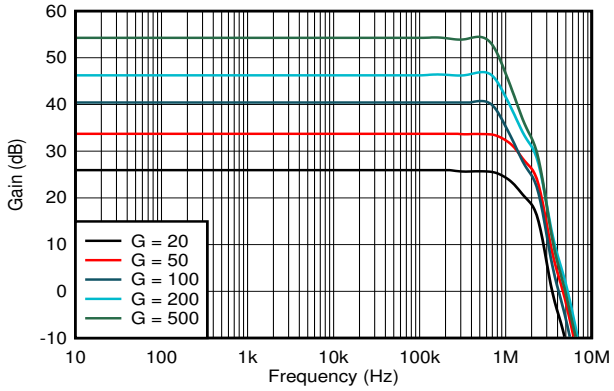

V_{SENSE} = 4 V / Gain

图 6-10. Gain vs. Frequency

Copyright © 2021 Texas Instruments Incorporated

6.6 Typical Characteristics (continued)

al specifications at T_A = 25°C, V_S = 5 V, V_{SENSE} = V_{IN+} – V_{IN-} = 0.5 V / Gain, and V_{CM} = V_{IN-} = 48 V (unless otherwise noted).

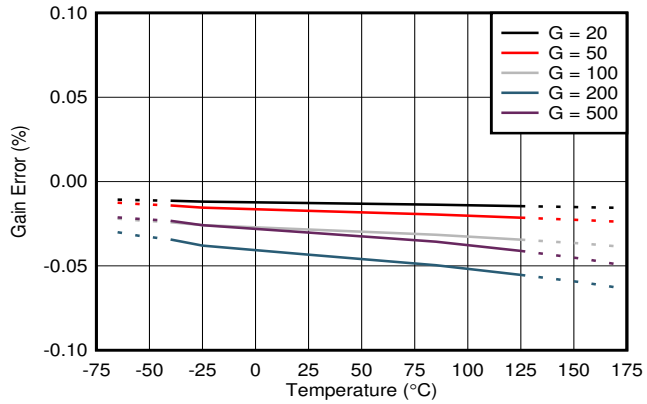

图 6-11. Gain Error vs. Temperature

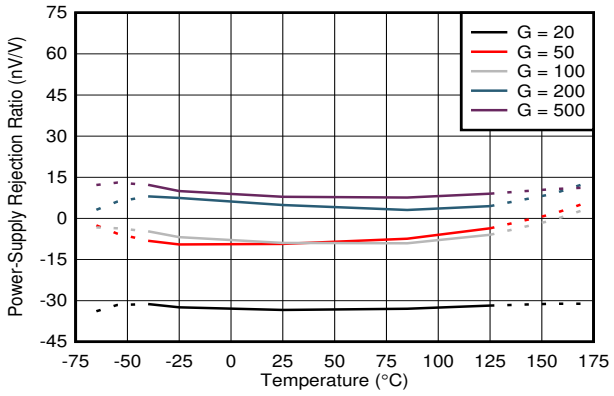

图 6-12. Power-Supply Rejection Ratio vs. Temperature

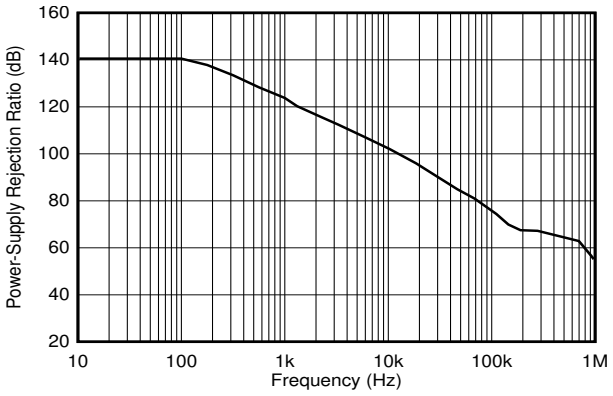

图 6-13. Power-Supply Rejection Ratio vs. Frequency

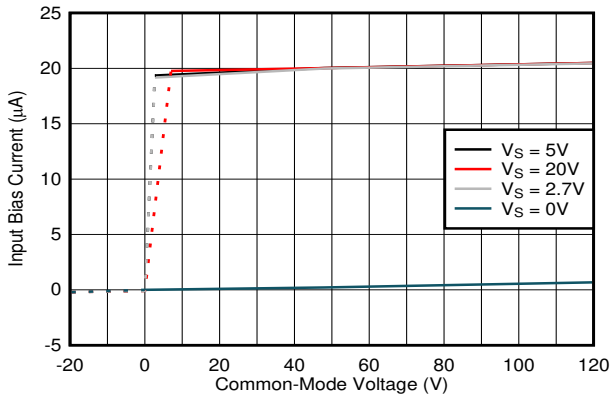

V_{SENSE} = 0 V

图 6-14. Input Bias Current vs. Common-Mode Voltage

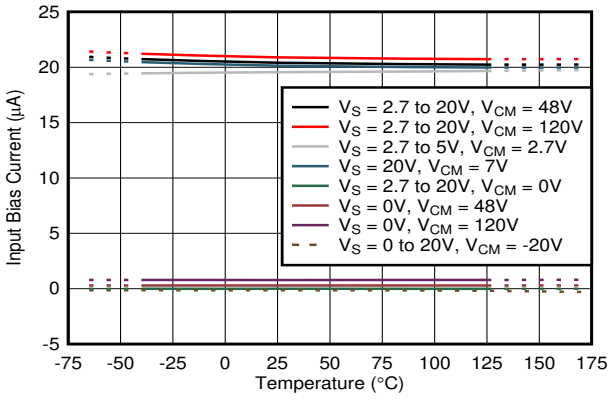

图 6-15. Input Bias Current vs. Temperature

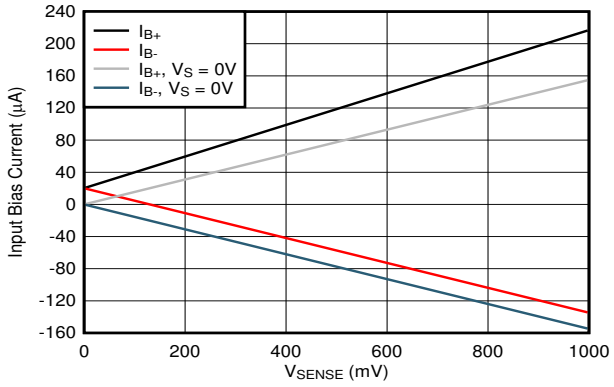

图 6-16. Input Bias Current vs. V_{SENSE}, A1 Devices

6.6 Typical Characteristics (continued)

al specifications at T_A = 25°C, V_S = 5 V, V_{SENSE} = V_{IN+} – V_{IN-} = 0.5 V / Gain, and V_{CM} = V_{IN-} = 48 V (unless otherwise noted).

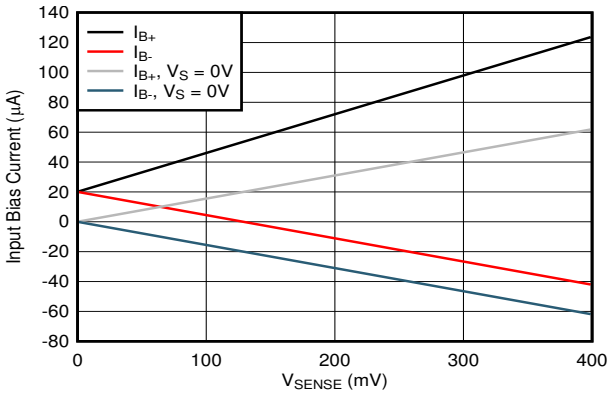

图 6-17. Input Bias Current vs. V_{SENSE}, A2 and A3 Devices

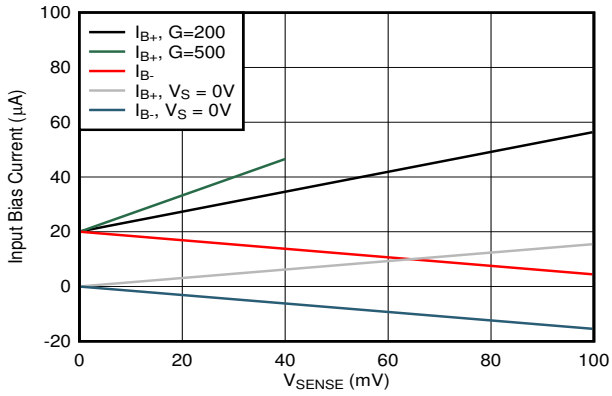

图 6-18. Input Bias Current vs. V_{SENSE}, A4 and A5 Devices

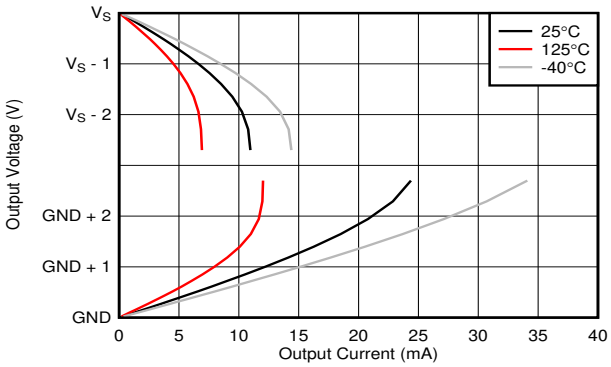

V_S = 2.7 V

图 6-19. Output Voltage vs. Output Current

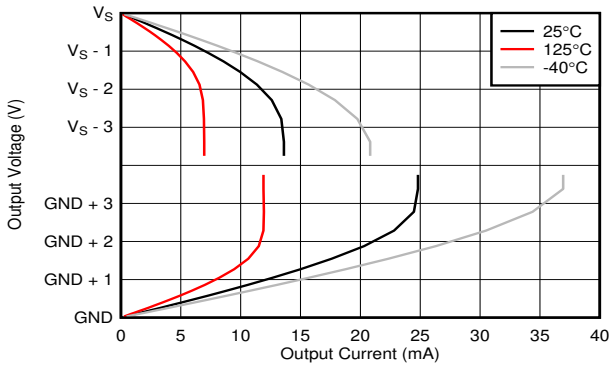

V_S = 5 V

图 6-20. Output Voltage vs. Output Current

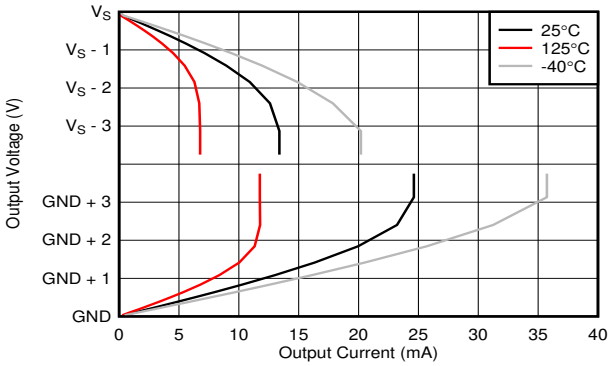

V_S = 20 V

图 6-21. Output Voltage vs. Output Current

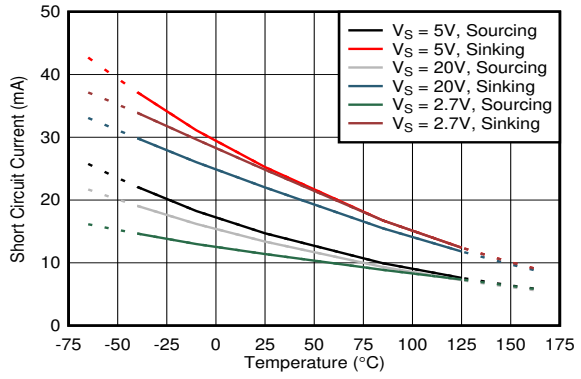

图 6-22. Short-Circuit Current vs. Temperature

Copyright © 2021 Texas Instruments Incorporated

6.6 Typical Characteristics (continued)

al specifications at T_A = 25°C, V_S = 5 V, V_{SENSE} = V_{IN+} – V_{IN-} = 0.5 V / Gain, and V_{CM} = V_{IN-} = 48 V (unless otherwise noted).

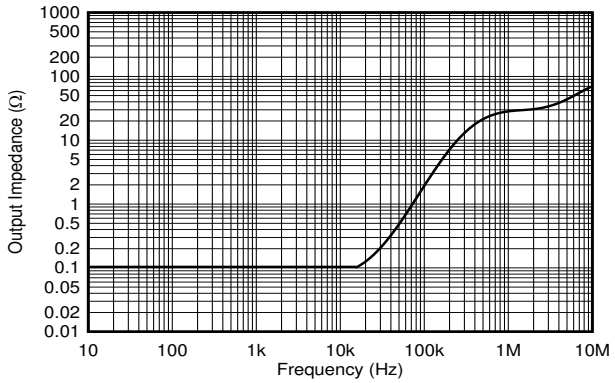

图 6-23. Output Impedance vs. Frequency

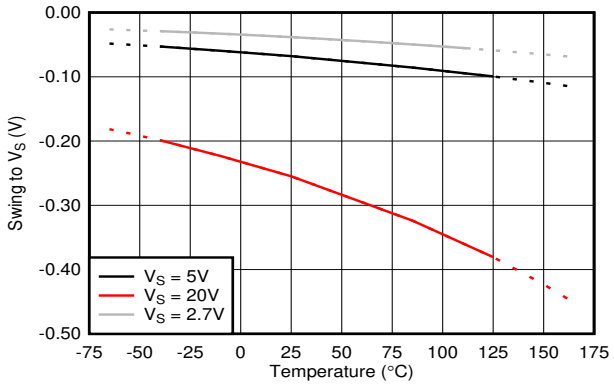

R_L = 10 kΩ

图 6-24. Swing to Supply vs. Temperature

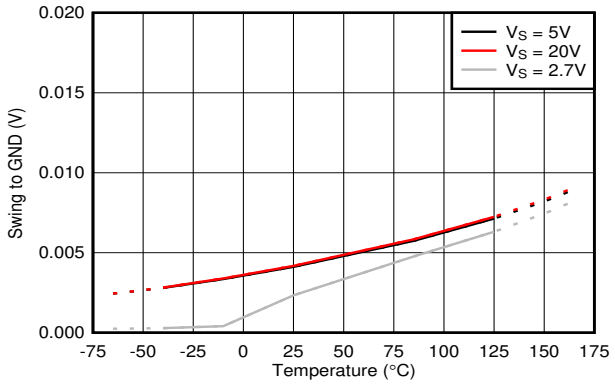

R_L = 10 kΩ

图 6-25. Swing to GND vs. Temperature

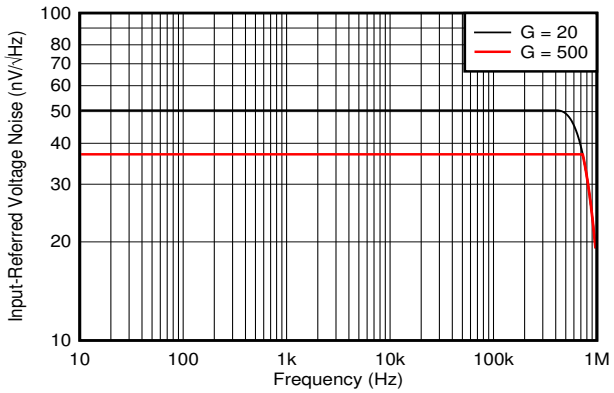

图 6-26. Input-Referred Noise vs. Frequency

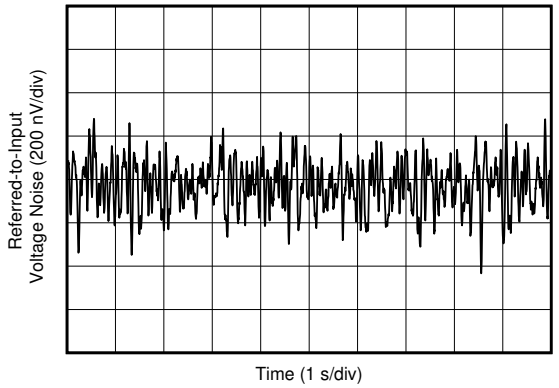

图 6-27. Input-Referred Noise

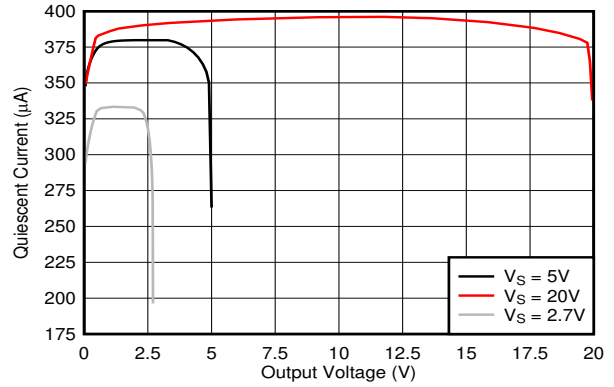

图 6-28. Quiescent Current vs. Output Voltage, INA290

Copyright © 2021 Texas Instruments Incorporated

6.6 Typical Characteristics (continued)

al specifications at T_A = 25°C, V_S = 5 V, V_{SENSE} = V_{IN+} – V_{IN-} = 0.5 V / Gain, and V_{CM} = V_{IN-} = 48 V (unless otherwise noted).

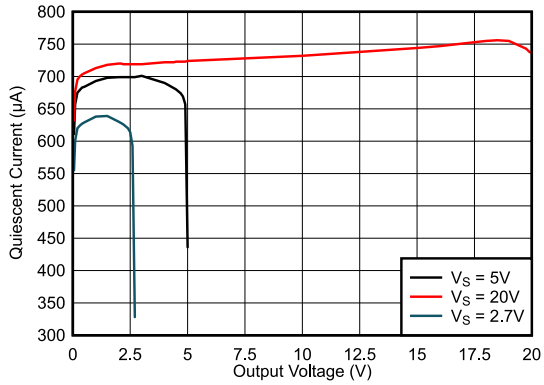

图 6-29. Quiescent Current vs. Output Voltage, INA2290

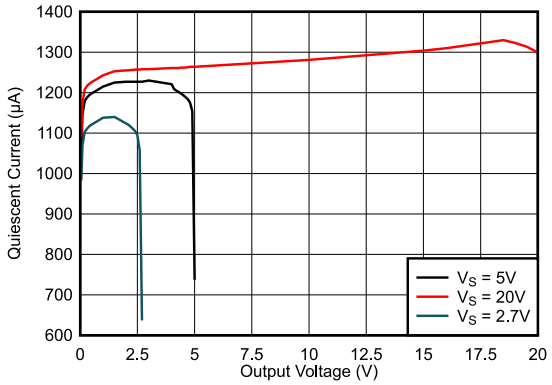

图 6-30. Quiescent Current vs. Output Voltage, INA4290

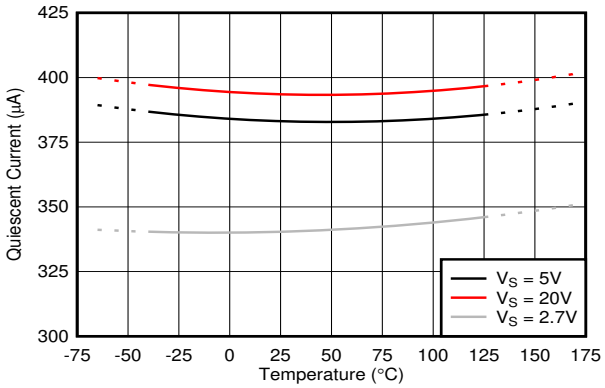

图 6-31. Quiescent Current vs. Temperature, INA290

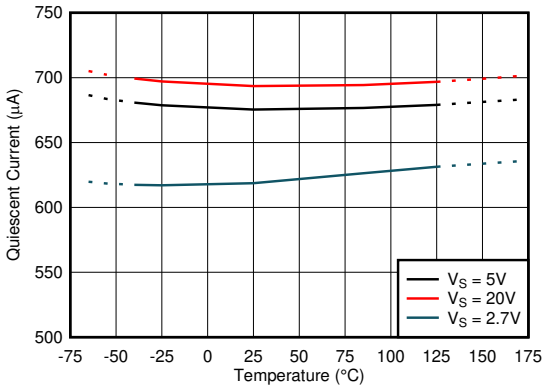

图 6-32. Quiescent Current vs. Temperature, INA2290

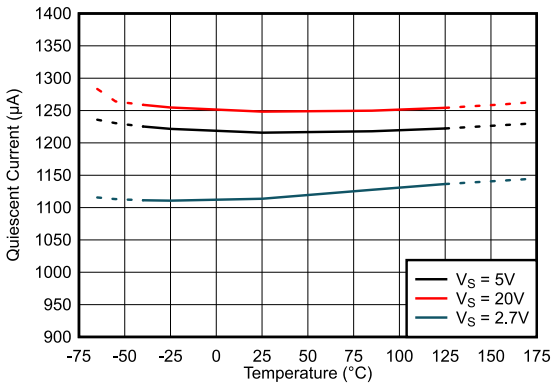

图 6-33. Quiescent Current vs. Temperature, INA4290

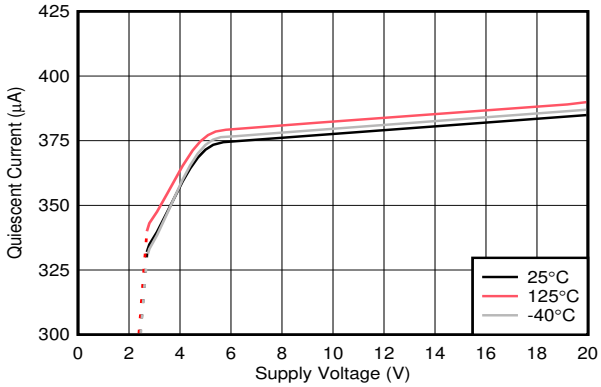

图 6-34. Quiescent Current vs. Supply Voltage, INA290

Copyright © 2021 Texas Instruments Incorporated

6.6 Typical Characteristics (continued)

al specifications at T_A = 25°C, V_S = 5 V, V_{SENSE} = V_{IN+} – V_{IN-} = 0.5 V / Gain, and V_{CM} = V_{IN-} = 48 V (unless otherwise noted).

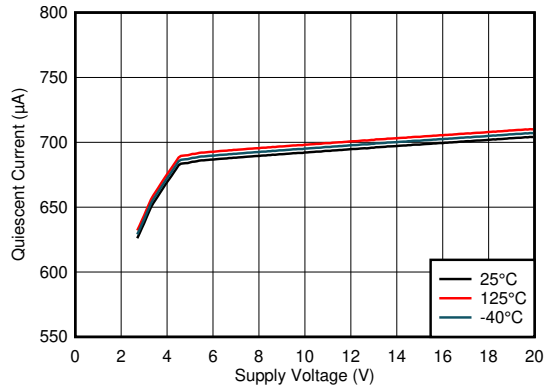

图 6-35. Quiescent Current vs. Supply Voltage, INA2290

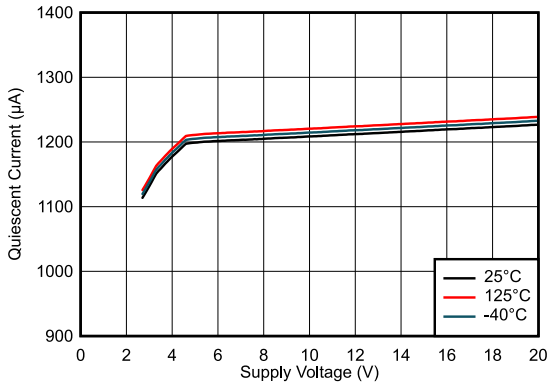

图 6-36. Quiescent Current vs. Supply Voltage, INA4290

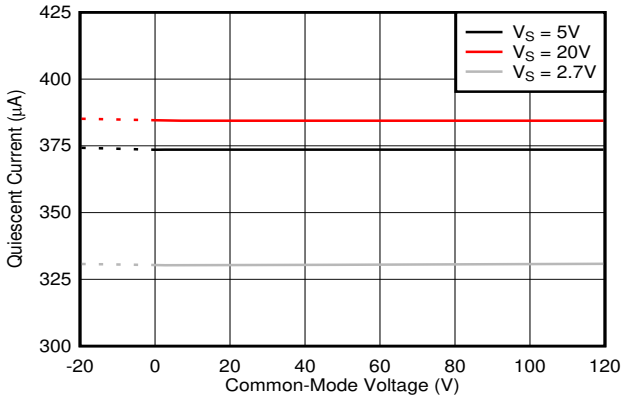

图 6-37. Quiescent Current vs. Common-Mode Voltage, INA290

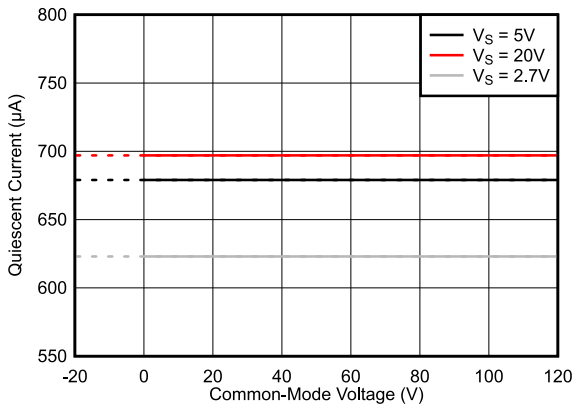

图 6-38. Quiescent Current vs. Common-Mode Voltage, INA2290

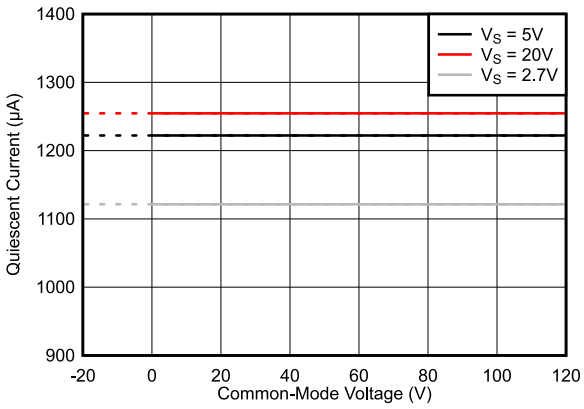

图 6-39. Quiescent Current vs. Common-Mode Voltage, INA4290

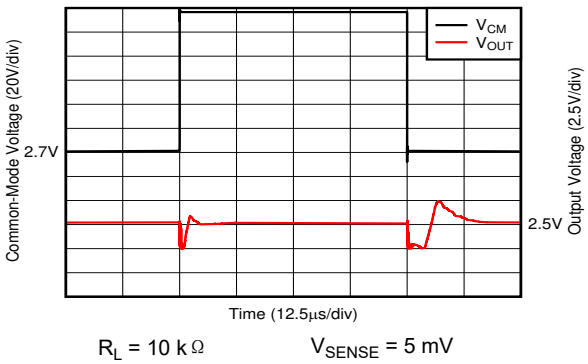

图 6-40. Common-Mode Voltage Fast Transient Pulse, A5 Devices

6.6 Typical Characteristics (continued)

al specifications at T_A = 25°C, V_S = 5 V, V_{SENSE} = V_{IN+} – V_{IN-} = 0.5 V / Gain, and V_{CM} = V_{IN-} = 48 V (unless otherwise noted).

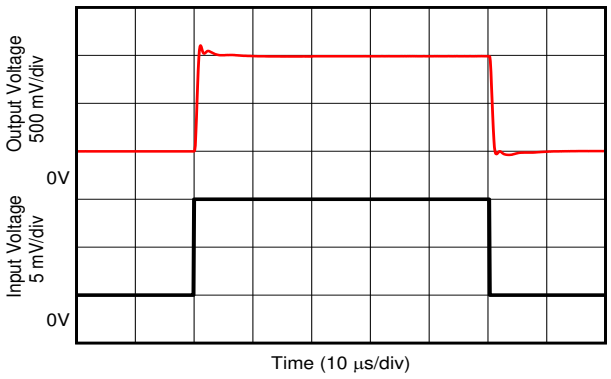

图 6-41. Step Response, A3 Devices

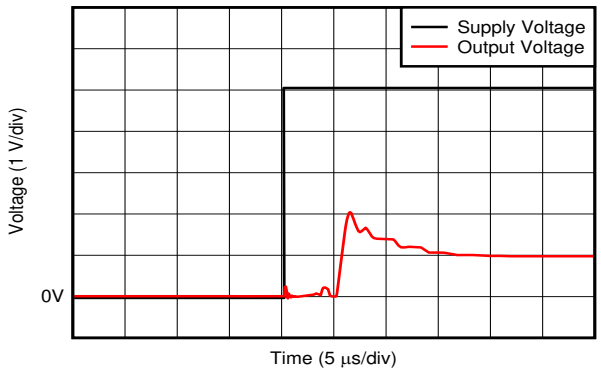

V_{SENSE} = 0 mV

图 6-42. Start-Up Response

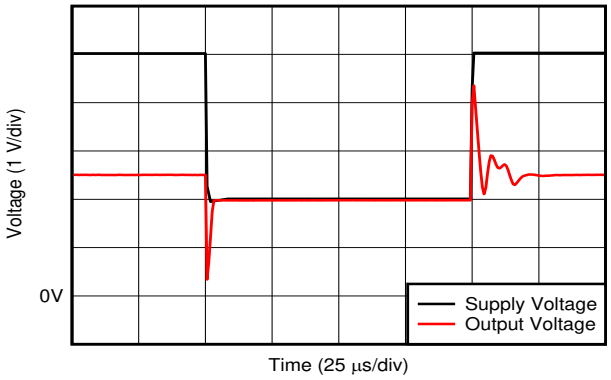

V_{SENSE} = 5 mV

图 6-43. Supply Transient Response, A5 Devices

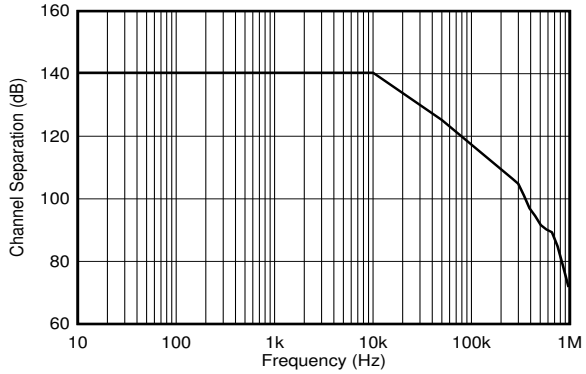

Any channel to any other channel

图 6-44. Channel Separation vs. Frequency, Multichannel Devices

Copyright © 2021 Texas Instruments Incorporated

7 Detailed Description

7.1 Overview

The INAx290 is a high-side only current-sense amplifier that offers a wide common-mode range, precision zero-drift topology, excellent common-mode rejection ratio (CMRR), high bandwidth, and fast slew rate. Different gain versions are available to optimize the output dynamic range based on the application. The INAx290 is designed using a transconductance architecture with a current-feedback amplifier that enables low bias currents of 20 µA and a common-mode voltage of 120 V.

7.2 Functional Block Diagram

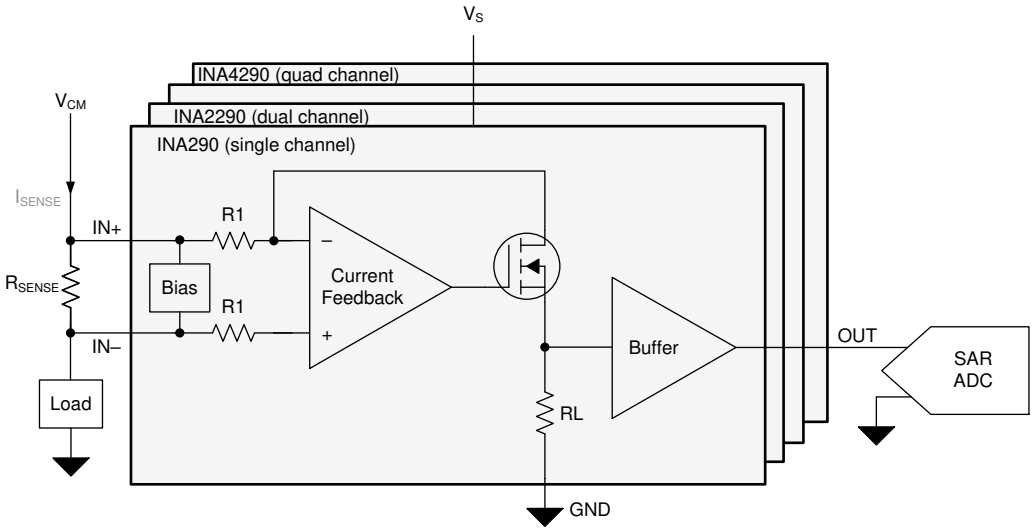

7.3 Feature Description

7.3.1 Amplifier Input Common-Mode Range

The INAx290 supports large input common-mode voltages from 2.7 V to 120 V and features a high DC CMRR of 160 dB (typical) and a 85-dB AC CMRR at 50 kHz. The minimum common-mode voltage as shown in 图 7-1 is restricted by the supply voltage. The topology of the internal amplifiers INAx290 restricts operation to high-side, current-sensing applications.

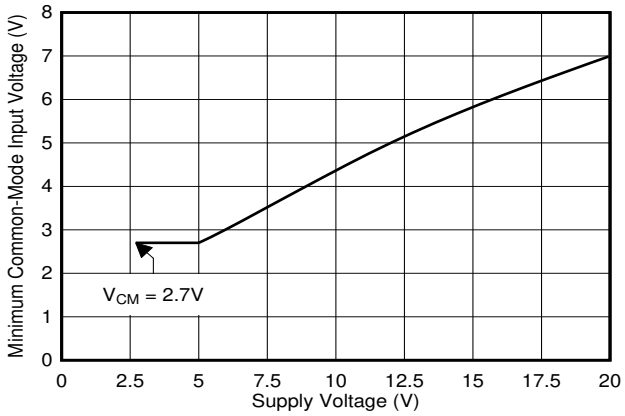

图 7-1. Minimum Common-Mode Voltage vs Supply

7.3.2 Input-Signal Bandwidth

图 6-10 shows the INAx290 –3-dB bandwidth is gain-dependent with gain options of 20 V/V, 50 V/V, 100 V/V, 200 V/V, and 500 V/V. The unique multistage design enables the amplifier to achieve high bandwidth at all gains. This high bandwidth provides the throughput and fast response required for rapid detection and processing of overcurrent events.

The device bandwidth also depends on the applied V_{SENSE} voltage. 图 7-2 shows the bandwidth performance profile of the device over frequency as output voltage increases for each gain variation. As shown in 图 7-2, the device exhibits the highest bandwidth with higher V_{SENSE} voltages, and the bandwidth is higher with lower device gain options. Individual requirements determine the acceptable limits of error for high-frequency, current-sensing applications. Testing and evaluation in the end application or circuit is required to determine the acceptance criteria and validate whether or not the performance levels meet the system specifications.

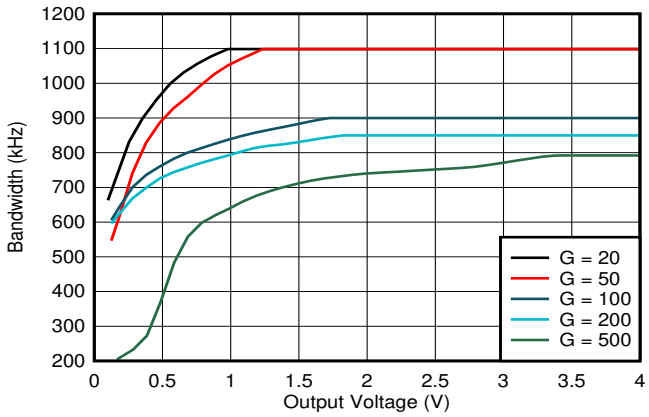

图 7-2. Bandwidth vs Output Voltage

Copyright © 2021 Texas Instruments Incorporated

7.3.3 Low Input Bias Current

The INAx290 input bias current draws 20 μA (typical) even with common-mode voltages as high as 120 V. This current enables precision current sensing in applications where the sensed current is small or in applications that require lower input leakage current.

7.3.4 Low V_{SENSE} Operation

The INAx290 enables accurate current measurement across the entire valid V_{SENSE} range. The zero-drift input architecture of the INAx290 provides the low offset voltage and low offset drift required to measure low V_{SENSE} levels accurately across the wide operating temperature of –40°C to +125°C. The capability to measure low sense voltages enables accurate measurements at lower load currents, and also allows reduction of the sense resistor value for a given operating current, which minimizes the power loss in the current-sensing element. For multichannel devices, the offset voltage and offset drift characteristics can vary from channel to channel; however, all channels meet the maximum values specified in *Electrical Characteristics*.

7.3.5 Wide Fixed-Gain Output

The INAx290 gain error is < 0.1% at room temperature for most gain options, with a maximum drift of 5 ppm/°C over the full temperature range of –40°C to +125°C. The INAx290 is available in multiple gain options of 20 V/V, 50 V/V, 100 V/V, 200 V/V, and 500 V/V, which is selected based on the desired signal-to-noise ratio and other system requirements of the design.

The INAx290 closed-loop gain is set by a precision, low-drift internal resistor network. The ratio of these resistors are excellently matched, although the absolute values can vary significantly. TI does not recommend adding additional resistance around the INAx290 to change the effective gain because of this variation. 表 7-1 describes the typical values of the internal gain resistors seen in the functional diagram above.

表 7-1. Fixed Gain Resistor

GAIN	R1	RL
20 (V/V)	25 kΩ	500 kΩ
50 (V/V)	10 kΩ	500 kΩ
100 (V/V)	10 kΩ	1000 kΩ
200 (V/V)	5 kΩ	1000 kΩ
500 (V/V)	2 kΩ	1000 kΩ

7.3.6 Wide Supply Range

The INAx290 operates with a wide supply range from a 2.7 V to 20 V. The output stage supports a full-scale output voltage range of up to V_S. A wide output range can enable very-wide dynamic range current measurements. For a gain of 20 V/V, the maximum acceptable differential input is 1 V.

The INAx290A1 gain offset is ±25 μV and this device is capable of measuring a wide dynamic range of current up to 92 dB.

Copyright © 2021 Texas Instruments Incorporated

7.4 Device Functional Modes

7.4.1 Unidirectional Operation

The INAx290 measures the differential voltage developed by current flowing through a resistor that is commonly referred to as a *current-sensing resistor* or a *current-shunt resistor*. 图 7-3 shows that the INAx290 operates in unidirectional mode only, meaning the device only senses current sourced from a power supply to a system load.

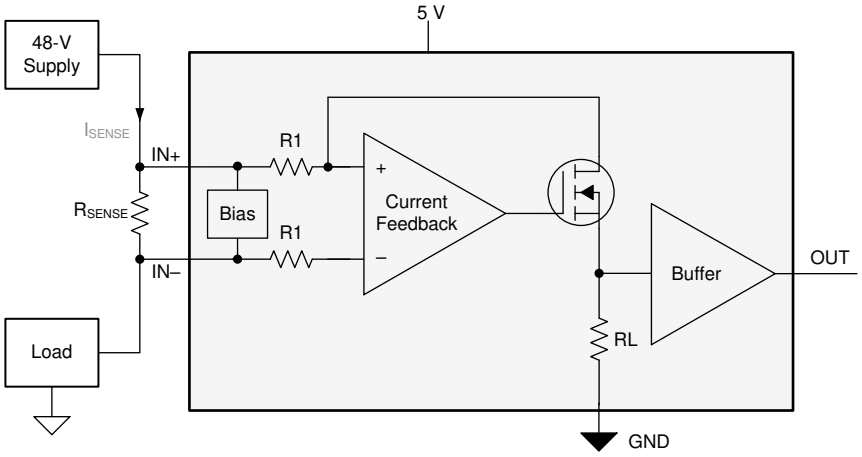

图 7-3. Unidirectional Application (Single-Channel Device)

The linear range of the output stage is limited to how close the output voltage can approach ground under zero-input conditions. The zero current output voltage of the INAx290 is very small, with a maximum of GND + 25 mV. Apply a sense voltage of (25 mV / Gain) or greater to keep the INAx290 output in the linear region of operation.

7.4.2 High Signal Throughput

With a bandwidth of 1.1 MHz at a gain of 20 V/V and a slew rate of 2 V/µs, the INAx290 is specifically designed for detecting and protecting applications from fast inrush currents. As shown in 表 7-2, the INAx290 responds in less than 2 µs for a system measuring a 75-A threshold on a 2-m Ω shunt.

表 7-2. Response Time

PARAMETER		EQUATION	INAx290 AT V_S = 5 V
G	Gain		20 V/V
I_{MAX}	Maximum current		100 A
$I_{Threshold}$	Threshold current		75 A
R_{SENSE}	Current sense resistor value		2 m Ω
V_{OUT_MAX}	Output voltage at maximum current	$V_{OUT} = I_{MAX} \times R_{SENSE} \times G$	4 V
V_{OUT_THR}	Output voltage at threshold current	$V_{OUT_THR} = I_{THR} \times R_{SENSE} \times G$	3 V
SR	Slew rate		2 V/µs
	Output response time	$T_{response} = V_{OUT_THR} / SR$	< 2 µs

Copyright © 2021 Texas Instruments Incorporated

8 Application and Implementation

Note

以下应用部分中的信息不属于 TI 器件规格的范围，TI 不担保其准确性和完整性。TI 的客 户应负责确定器件是否适用于其应用。客户应验证并测试其设计，以确保系统功能。

8.1 Application Information

The INAx290 amplifies the voltage developed across a current-sensing resistor as current flows through the resistor to the load. The wide input common-mode voltage range and high common-mode rejection of the INAx290 allows use over a wide range of voltage rails while still maintaining an accurate current measurement.

8.1.1 R_{SENSE} and Device Gain Selection

The accuracy of any current-sense amplifier is maximized by choosing the current-sense resistor to be as large as possible. A large sense resistor maximizes the differential input signal for a given amount of current flow and reduces the error contribution of the offset voltage. However, there are practical limits as to how large the current-sense resistor can be in a given application because of the resistor size and maximum allowable power dissipation. 方程式 1 gives the maximum value for the current-sense resistor for a given power dissipation budget:

$$R_{SENSE} < \frac{PD_{MAX}}{I_{MAX}^2} \quad (1)$$

where:

- PD_{MAX} is the maximum allowable power dissipation in R_{SENSE}.
- I_{MAX} is the maximum current that flows through R_{SENSE}.

An additional limitation on the size of the current-sense resistor and device gain results from the power-supply voltage, V_S, and device swing-to-rail limitations. To ensure that the current-sense signal is properly passed to the output, both positive and negative output swing limitations must be examined. 方程式 2 provides the maximum values of R_{SENSE} and GAIN to keep the device from exceeding the positive swing limitation.

$$I_{MAX} \times R_{SENSE} \times GAIN < V_{SP} \quad (2)$$

where:

- I_{MAX} is the maximum current that flows through R_{SENSE}.
- GAIN is the gain of the current-sense amplifier.
- V_{SP} is the positive output swing as specified in this data sheet.

To avoid positive output swing limitations when selecting the value of R_{SENSE}, there is always a trade-off between the value of the sense resistor and the gain of the device under consideration. If the sense resistor selected for the maximum power dissipation is too large, then selecting a lower gain device is possible to avoid positive swing limitations.

The negative swing limitation places a limit on how small the sense resistor value can be for a given application. 方程式 3 provides the limit on the minimum value of the sense resistor.

$$I_{MIN} \times R_{SENSE} \times GAIN > V_{SN} \quad (3)$$

where:

- I_{MIN} is the minimum current that flows through R_{SENSE}.
- GAIN is the gain of the current-sense amplifier.
- V_{SN} is the negative output swing of the device.

Copyright © 2021 Texas Instruments Incorporated

表 8-1 shows an example of the different results obtained from using five different gain versions of the INAx290. From the table data, the highest gain device allows a smaller current-shunt resistor and decreased power dissipation in the element.

表 8-1. R_{SENSE} Selection and Power Dissipation

PARAMETER(1)		EQUATION	RESULTS AT V_S = 5 V				
			INAx290A1	INAx290A2	INAx290A3	INAx290A4	INAx290A5
G	Gain		20 V/V	50 V/V	100 V/V	200 V/V	500 V/V
V_{SENSE}	Ideal differential input voltage (Ignores swing limitation and power-supply variation.)	$V_{SENSE} = V_{OUT} / G$	250 mV	100 mV	50 mV	25 mV	10 mV
R_{SENSE}	Current-sense resistor value	$R_{SENSE} = V_{SENSE} / I_{MAX}$	25 mΩ	10 mΩ	5 mΩ	2.5 mΩ	1 mΩ
P_{SENSE}	Current-sense resistor power dissipation	$R_{SENSE} \times I_{MAX}2$	2.5 W	1 W	0.5W	0.25 W	0.1 W

(1) Design example with 10-A, full-scale current with maximum output voltage set to 5 V.

8.1.2 Input Filtering

Note

Input filters are not required for accurate measurements using the INAx290, and use of filters in this location is not recommended. If filter components are used on the input of the amplifier, follow the guidelines in this section to minimize the effects on performance.

Based strictly on user design requirements, external filtering of the current signal may be desired. The initial location that can be considered for the filter is at the output of the current-sense amplifier. Although placing the filter at the output satisfies the filtering requirements, this location changes the low output impedance measured by any circuitry connected to the output voltage pin. The other location for filter placement is at the current-sense amplifier input pins. This location also satisfies the filtering requirement, but the components must be carefully selected to minimally impact device performance. 图 8-1 shows a filter placed at the input pins.

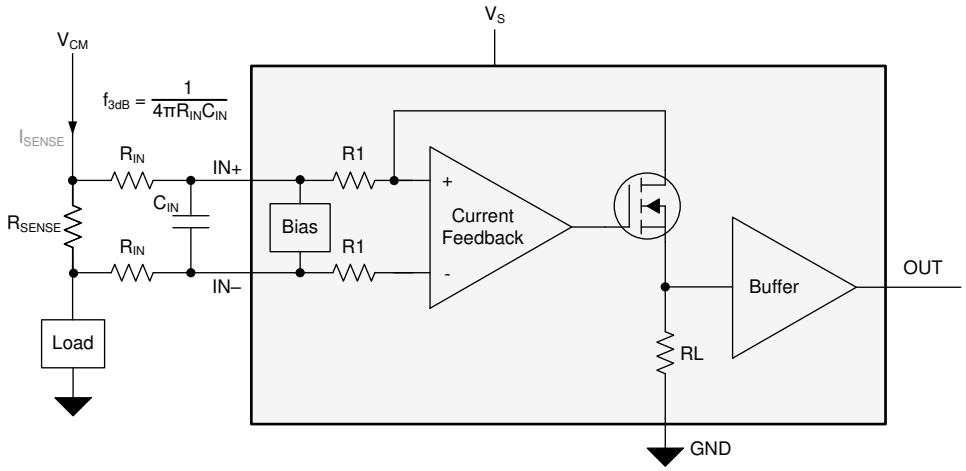

图 8-1. Filter at Input Pins (Single Channel Shown for Simplicity)

External series resistance provides a source of additional measurement error, so keep the value of these series resistors to 10 Ω or less to reduce loss of accuracy. The internal bias network shown in 图 8-1 creates a mismatch in input bias currents (see 图 6-16, 图 6-17, and 图 6-18) when a differential voltage is applied between the input pins. If additional external series filter resistors are added to the circuit, a mismatch is created in the voltage drop across the filter resistors. This voltage is a differential error voltage in the shunt resistor voltage. In addition to the absolute resistor value, mismatch resulting from resistor tolerance can significantly impact the error because this value is calculated based on the actual measured resistance.

Copyright © 2021 Texas Instruments Incorporated

Use 方程式 4 to calculate the measurement error expected from the additional external filter resistors, and use 方程式 5 to calculate the gain error factor.

$$\text{Gain Error (\%)} = 100 \times (\text{Gain Error Factor} - 1) \quad (4)$$

$$\text{Gain Error Factor} = \frac{R_B \times R1}{(R_B \times R1) + (R_B \times R_{IN}) + (2 \times R_{IN} \times R1)} \quad (5)$$

Where:

- R_{IN} is the external filter resistance value.
- R1 is the INAx290 input resistance value specified in 表 7-1.
- R_B in the internal bias resistance, which is 6600 Ω ± 20%.

The gain error factor, shown in 方程式 4, can be calculated to determine the gain error introduced by the additional external series resistance. 方程式 4 calculates the deviation of the shunt voltage, resulting from the attenuation and imbalance created by the added external filter resistance. 表 8-2 provides the gain error factor and gain error for several resistor values.

表 8-2. Example Gain Error Factor and Gain Error for 10-Ω External Filter Input Resistors

DEVICE (GAIN)	GAIN ERROR FACTOR	GAIN ERROR (%)
A1 devices (20)	0.99658	–0.34185
A2 devices (50)	0.99598	–0.40141
A3 devices (100)	0.99598	–0.40141
A4 devices (200)	0.99499	–0.50051
A5 devices (500)	0.99203	–0.79663

8.2 Typical Application

The INAx290 is a unidirectional, current-sense amplifier capable of measuring currents through a resistive shunt with shunt common-mode voltages from 2.7 V to 120 V. 图 8-2 shows the circuit configuration for monitoring current in a high-side radio frequency (RF) power amplifier (PA) application.

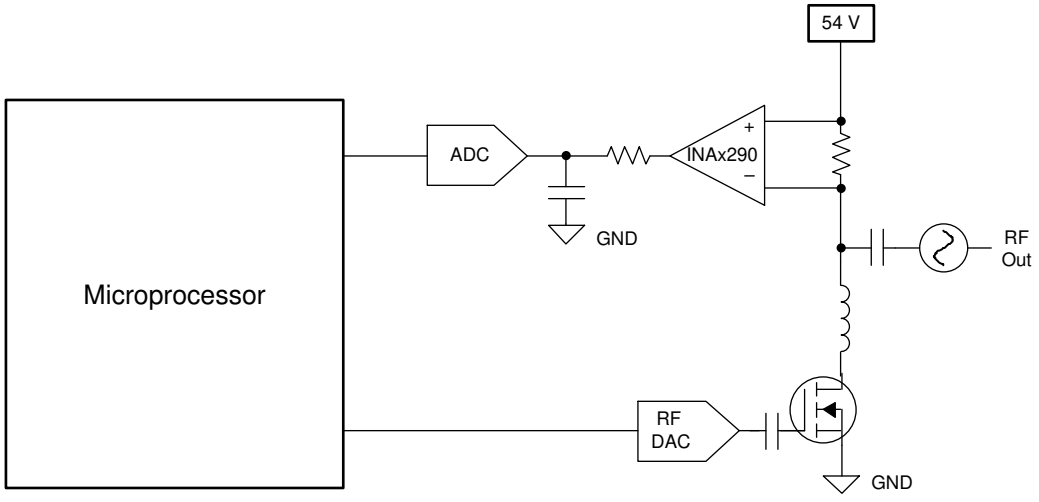

图 8-2. Current Sensing in a PA Application (Single-Channel Device)

8.2.1 Design Requirements

V_{SUPPLY} is set to 5 V and the common-mode voltage set to 54 V. 表 8-3 lists the design setup for this application.

表 8-3. Design Parameters

DESIGN PARAMETERS	EXAMPLE VALUE
INAx290 supply voltage	5 V
High-side supply voltage	5 V
Maximum sense current (I_{MAX})	5 A
Gain option	50 V/V

8.2.2 Detailed Design Procedure

The maximum value of the current-sense resistor is calculated based on the choice of gain, value of the maximum current to be sensed (I_{MAX}), and the power-supply voltage (V_S). When operating at the maximum current, the output voltage must not exceed the positive output swing specification, V_{SP}. Under the given design parameters, 方程式 6 calculates the maximum value for R_{SENSE} as 19.2 mΩ.

$$R_{SENSE} < \frac{V_{SP}}{I_{MAX} \times GAIN} \tag{6}$$

Although 15 mΩ is less than the maximum value calculated, 15 mΩ is selected for this design example because this value is still large enough to provide an adequate signal at the current-sense amplifier output.

8.2.2.1 Overload Recovery With Negative V_{SENSE}

The INAx290 is a unidirectional current-sense amplifier that is meant to operate with a positive differential input voltage (V_{SENSE}). If negative V_{SENSE} is applied, the device is placed in an overload condition and requires time to recover when V_{SENSE} returns positive. The required overload recovery time increases with more negative V_{SENSE}.

8.2.3 Application Curve

图 8-3 shows the output response of the device to a high-frequency sinusoidal current.

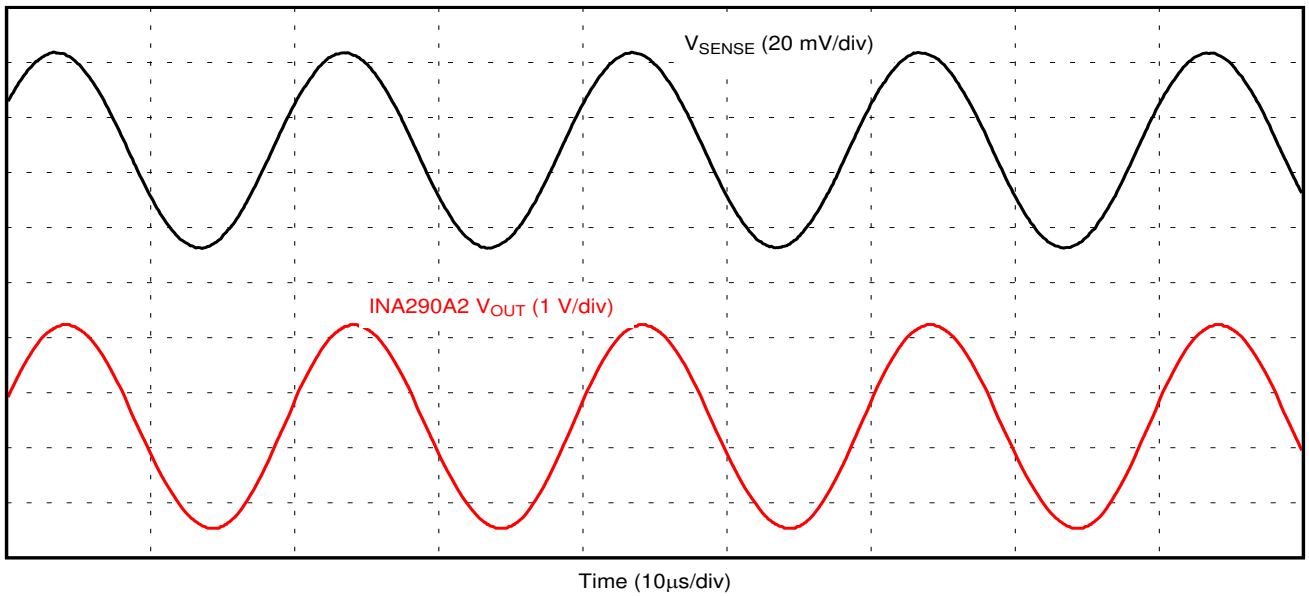

图 8-3. INAx290 Output Response

Copyright © 2021 Texas Instruments Incorporated

9 Power Supply Recommendations

The input circuitry of the INAx290 can accurately measure beyond the power-supply voltage. The power supply can be 20 V, whereas the load power-supply voltage at IN+ and IN– can go up to 120 V. The output voltage range of the OUT pin is limited by the voltage on the VS pin and the device swing to the supply specification.

10 Layout

10.1 Layout Guidelines

TI always recommends to follow good layout practices:

- Connect the input pins to the sensing resistor using a Kelvin or 4-wire connection. This connection technique makes sure that only the current-sensing resistor impedance is detected between the input pins. Poor routing of the current-sensing resistor commonly results in additional resistance present between the input pins. Given the very low ohmic value of the current resistor, any additional high-current carrying impedance can cause significant measurement errors.
- Place the power-supply bypass capacitor as close to the device power supply and ground pins as possible. The recommended value of this bypass capacitor is 0.1 µF. Additional decoupling capacitance can be added to compensate for noisy or high-impedance power supplies.
- When routing the connections from the current-sense resistor to the device, keep the trace lengths as short as possible.

10.2 Layout Examples

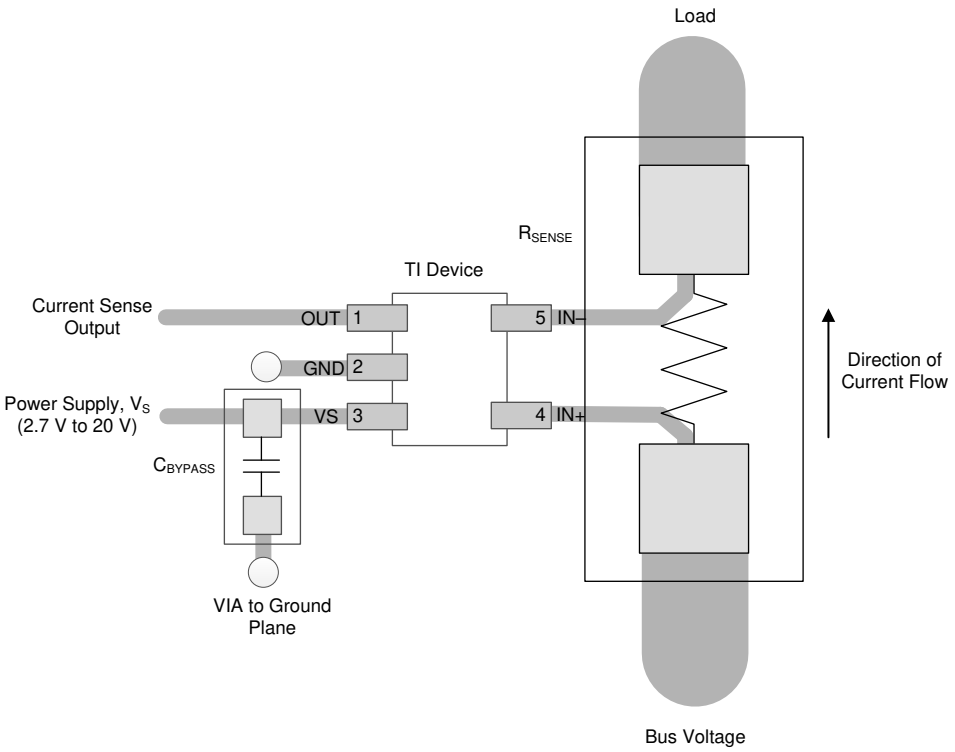

图 10-1. Recommended Layout for the INA290

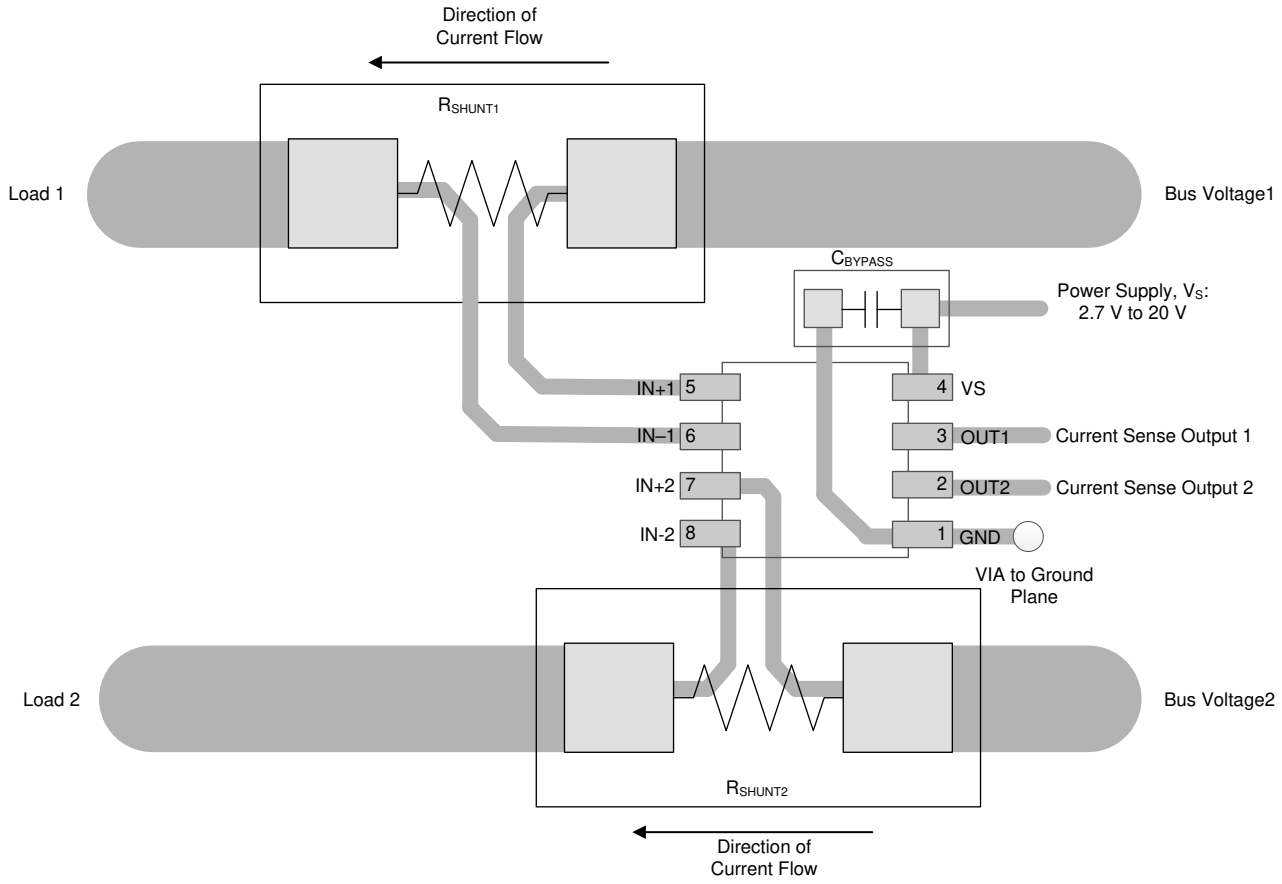

图 10-2. Recommended Layout for the INA2290

Copyright © 2021 Texas Instruments Incorporated

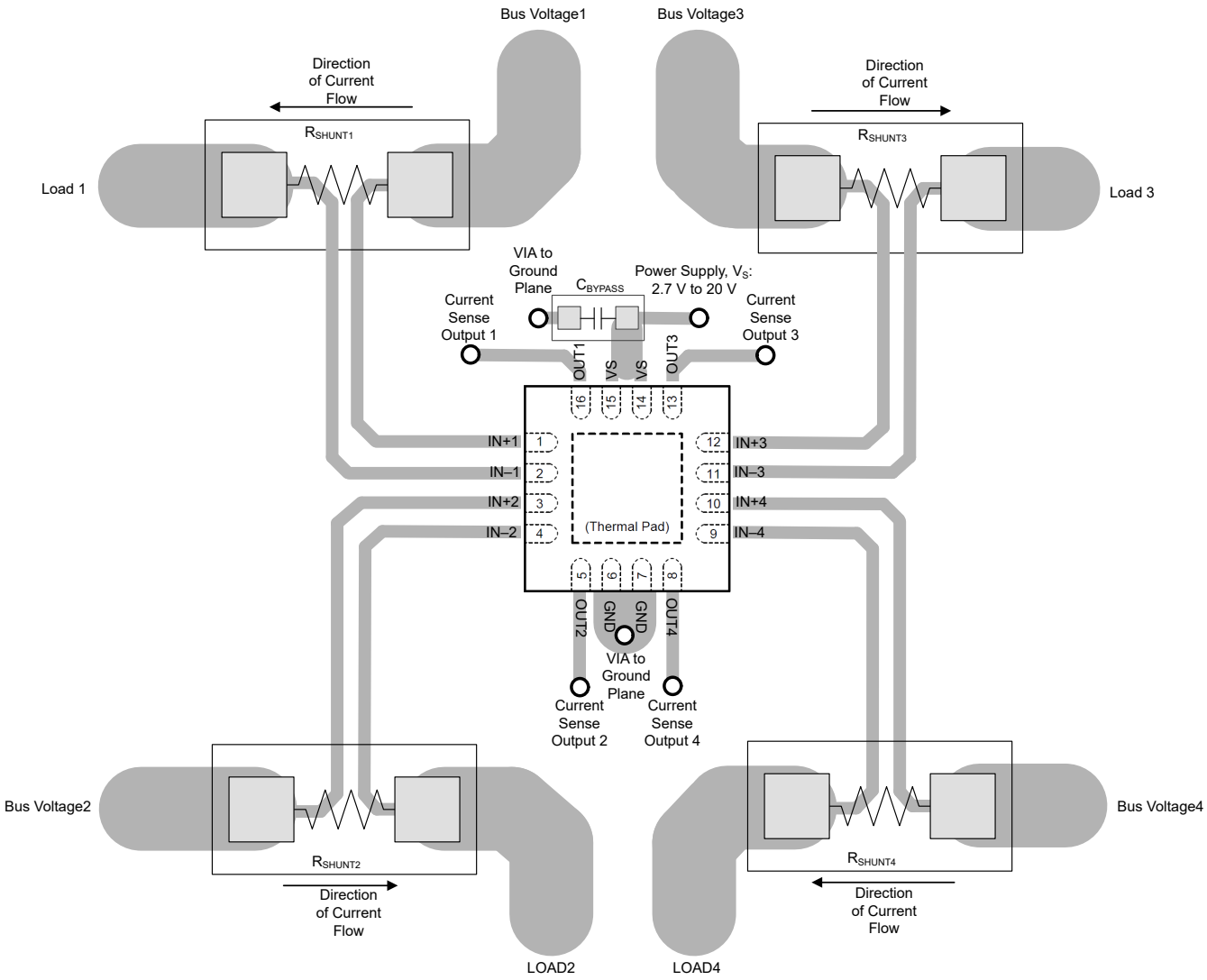

图 10-3. Recommended Layout for the INA4290

11 Device and Documentation Support

11.1 Documentation Support

11.1.1 Related Documentation

For related documentation, see the following:

- Texas Instruments, *INA290EVM User's Guide* (SBOU230)
- Texas Instruments, *INA2290EVM User's Guide* (SBOU243)
- Texas Instruments, *INA4290EVM User's Guide* (SBOU258)

11.2 接收文档更新通知

要接收文档更新通知，请导航至 ti.com 上的器件产品文件夹。点击*订阅更新* 进行注册，即可每周接收产品信息更改摘要。有关更改的详细信息，请查看任何已修订文档中包含的修订历史记录。

11.3 支持资源

TI E2E™ 支持论坛是工程师的重要参考资料，可直接从专家获得快速、经过验证的解答和设计帮助。搜索现有解答或提出自己的问题可获得所需的快速设计帮助。

链接的内容由各个贡献者“按原样”提供。这些内容并不构成 TI 技术规范，并且不一定反映 TI 的观点；请参阅 TI 的《使用条款》。

11.4 Trademarks

TI E2E™ is a trademark of Texas Instruments.
所有商标均为其各自所有者的财产。

11.5 静电放电警告



静电放电 (ESD) 会损坏这个集成电路。德州仪器 (TI) 建议通过适当的预防措施处理所有集成电路。如果不遵守正确的处理和安装程序，可能会损坏集成电路。

ESD 的损坏小至导致微小的性能降级，大至整个器件故障。精密的集成电路可能更容易受到损坏，这是因为非常细微的参数更改都可能会导致器件与其发布的规格不相符。

11.6 术语表

TI 术语表　　本术语表列出并解释了术语、首字母缩略词和定义。

12 Mechanical, Packaging, and Orderable Information

The following pages include mechanical, packaging, and orderable information. This information is the most current data available for the designated devices. This data is subject to change without notice and revision of this document. For browser-based versions of this data sheet, refer to the left-hand navigation.

Copyright © 2021 Texas Instruments Incorporated

重要声明和免责声明

TI 提供技术和可靠性数据（包括数据表）、设计资源（包括参考设计）、应用或其他设计建议、网络工具、安全信息和其他资源，不保证没有瑕疵且不做出任何明示或暗示的担保，包括但不限于对适销性、某特定用途方面的适用性或不侵犯任何第三方知识产权的暗示担保。

这些资源可供使用 TI 产品进行设计的熟练开发人员使用。您将自行承担以下全部责任：(1) 针对您的应用选择合适的 TI 产品，(2) 设计、验证并测试您的应用，(3) 确保您的应用满足相应标准以及任何其他安全、安保或其他要求。这些资源如有变更，恕不另行通知。TI 授权您仅可将这些资源用于研发本资源所述的 TI 产品的应用。严禁对这些资源进行其他复制或展示。您无权使用任何其他 TI 知识产权或任何第三方知识产权。您应全额赔偿因在这些资源的使用中对 TI 及其代表造成的任何索赔、损害、成本、损失和债务，TI 对此概不负责。

TI 提供的产品受 TI 的销售条款 (https:www.ti.com/legal/termsofsale.html) 或 ti.com 上其他适用条款/TI 产品随附的其他适用条款的约束。TI 提供这些资源并不会扩展或以其他方式更改 TI 针对 TI 产品发布的适用的担保或担保免责声明。

邮寄地址：Texas Instruments, Post Office Box 655303, Dallas, Texas 75265
Copyright © 2021，德州仪器 (TI) 公司

PACKAGING INFORMATION

Orderable Device	Status (1)	Package Type	Package Drawing	Pins	Package Qty	Eco Plan (2)	Lead finish/ Ball material (6)	MSL Peak Temp (3)	Op Temp (°C)	Device Marking (4/5)	Samples
INA2290A1IDGKR	ACTIVE	VSSOP	DGK	8	2500	RoHS & Green	NIPDAU	Level-2-260C-1 YEAR	-40 to 125	2FAQ	Samples
INA2290A1IDGKT	ACTIVE	VSSOP	DGK	8	250	RoHS & Green	NIPDAU	Level-2-260C-1 YEAR	-40 to 125	2FAQ	Samples
INA2290A2IDGKR	ACTIVE	VSSOP	DGK	8	2500	RoHS & Green	NIPDAU	Level-2-260C-1 YEAR	-40 to 125	2FBQ	Samples
INA2290A2IDGKT	ACTIVE	VSSOP	DGK	8	250	RoHS & Green	NIPDAU	Level-2-260C-1 YEAR	-40 to 125	2FBQ	Samples
INA2290A3IDGKR	ACTIVE	VSSOP	DGK	8	2500	RoHS & Green	NIPDAU	Level-2-260C-1 YEAR	-40 to 125	2FCQ	Samples
INA2290A3IDGKT	ACTIVE	VSSOP	DGK	8	250	RoHS & Green	NIPDAU	Level-2-260C-1 YEAR	-40 to 125	2FCQ	Samples
INA2290A4IDGKR	ACTIVE	VSSOP	DGK	8	2500	RoHS & Green	NIPDAU	Level-2-260C-1 YEAR	-40 to 125	2FDQ	Samples
INA2290A4IDGKT	ACTIVE	VSSOP	DGK	8	250	RoHS & Green	NIPDAU	Level-2-260C-1 YEAR	-40 to 125	2FDQ	Samples
INA2290A5IDGKR	ACTIVE	VSSOP	DGK	8	2500	RoHS & Green	NIPDAU	Level-2-260C-1 YEAR	-40 to 125	2FEQ	Samples
INA2290A5IDGKT	ACTIVE	VSSOP	DGK	8	250	RoHS & Green	NIPDAU	Level-2-260C-1 YEAR	-40 to 125	2FEQ	Samples
INA290A1IDCKR	ACTIVE	SC70	DCK	5	3000	RoHS & Green	NIPDAU	Level-1-260C-UNLIM	-40 to 125	1FQ	Samples
INA290A1IDCKT	ACTIVE	SC70	DCK	5	250	RoHS & Green	NIPDAU	Level-1-260C-UNLIM	-40 to 125	1FQ	Samples
INA290A2IDCKR	ACTIVE	SC70	DCK	5	3000	RoHS & Green	NIPDAU	Level-1-260C-UNLIM	-40 to 125	1FR	Samples
INA290A2IDCKT	ACTIVE	SC70	DCK	5	250	RoHS & Green	NIPDAU	Level-1-260C-UNLIM	-40 to 125	1FR	Samples
INA290A3IDCKR	ACTIVE	SC70	DCK	5	3000	RoHS & Green	NIPDAU	Level-1-260C-UNLIM	-40 to 125	1FS	Samples
INA290A3IDCKT	ACTIVE	SC70	DCK	5	250	RoHS & Green	NIPDAU	Level-1-260C-UNLIM	-40 to 125	1FS	Samples
INA290A4IDCKR	ACTIVE	SC70	DCK	5	3000	RoHS & Green	NIPDAU	Level-1-260C-UNLIM	-40 to 125	1FT	Samples
INA290A4IDCKT	ACTIVE	SC70	DCK	5	250	RoHS & Green	NIPDAU	Level-1-260C-UNLIM	-40 to 125	1FT	Samples
INA290A5IDCKR	ACTIVE	SC70	DCK	5	3000	RoHS & Green	NIPDAU	Level-1-260C-UNLIM	-40 to 125	1FU	Samples
INA290A5IDCKT	ACTIVE	SC70	DCK	5	250	RoHS & Green	NIPDAU	Level-1-260C-UNLIM	-40 to 125	1FU	Samples

Orderable Device	Status (1)	Package Type	Package Drawing	Pins	Package Qty	Eco Plan (2)	Lead finish/ Ball material (6)	MSL Peak Temp (3)	Op Temp (°C)	Device Marking (4/5)	Samples
INA4290A1IRGVR	ACTIVE	VQFN	RGV	16	2500	RoHS & Green	NIPDAU	Level-2-260C-1 YEAR	-40 to 125	INA 4290A1	Samples
INA4290A1IRGVT	ACTIVE	VQFN	RGV	16	250	RoHS & Green	NIPDAU	Level-2-260C-1 YEAR	-40 to 125	INA 4290A1	Samples
INA4290A2IRGVR	ACTIVE	VQFN	RGV	16	2500	RoHS & Green	NIPDAU	Level-2-260C-1 YEAR	-40 to 125	INA 4290A2	Samples
INA4290A2IRGVT	ACTIVE	VQFN	RGV	16	250	RoHS & Green	NIPDAU	Level-2-260C-1 YEAR	-40 to 125	INA 4290A2	Samples
INA4290A3IRGVR	ACTIVE	VQFN	RGV	16	2500	RoHS & Green	NIPDAU	Level-2-260C-1 YEAR	-40 to 125	INA 4290A3	Samples
INA4290A3IRGVT	ACTIVE	VQFN	RGV	16	250	RoHS & Green	NIPDAU	Level-2-260C-1 YEAR	-40 to 125	INA 4290A3	Samples
INA4290A4IRGVR	ACTIVE	VQFN	RGV	16	2500	RoHS & Green	NIPDAU	Level-2-260C-1 YEAR	-40 to 125	INA 4290A4	Samples
INA4290A4IRGVT	ACTIVE	VQFN	RGV	16	250	RoHS & Green	NIPDAU	Level-2-260C-1 YEAR	-40 to 125	INA 4290A4	Samples
INA4290A5IRGVR	ACTIVE	VQFN	RGV	16	2500	RoHS & Green	NIPDAU	Level-2-260C-1 YEAR	-40 to 125	INA 4290A5	Samples
INA4290A5IRGVT	ACTIVE	VQFN	RGV	16	250	RoHS & Green	NIPDAU	Level-2-260C-1 YEAR	-40 to 125	INA 4290A5	Samples

(1) The marketing status values are defined as follows:
ACTIVE: Product device recommended for new designs.
LIFEBUY: TI has announced that the device will be discontinued, and a lifetime-buy period is in effect.
NRND: Not recommended for new designs. Device is in production to support existing customers, but TI does not recommend using this part in a new design.
PREVIEW: Device has been announced but is not in production. Samples may or may not be available.
OBSOLETE: TI has discontinued the production of the device.

(2) **RoHS:** TI defines "RoHS" to mean semiconductor products that are compliant with the current EU RoHS requirements for all 10 RoHS substances, including the requirement that RoHS substance do not exceed 0.1% by weight in homogeneous materials. Where designed to be soldered at high temperatures, "RoHS" products are suitable for use in specified lead-free processes. TI may reference these types of products as "Pb-Free".
RoHS Exempt: TI defines "RoHS Exempt" to mean products that contain lead but are compliant with EU RoHS pursuant to a specific EU RoHS exemption.
Green: TI defines "Green" to mean the content of Chlorine (Cl) and Bromine (Br) based flame retardants meet JS709B low halogen requirements of <=1000ppm threshold. Antimony trioxide based flame retardants must also meet the <=1000ppm threshold requirement.

(3) MSL, Peak Temp. - The Moisture Sensitivity Level rating according to the JEDEC industry standard classifications, and peak solder temperature.

(4) There may be additional marking, which relates to the logo, the lot trace code information, or the environmental category on the device.

(5) Multiple Device Markings will be inside parentheses. Only one Device Marking contained in parentheses and separated by a "~" will appear on a device. If a line is indented then it is a continuation of the previous line and the two combined represent the entire Device Marking for that device.

(6) Lead finish/Ball material - Orderable Devices may have multiple material finish options. Finish options are separated by a vertical ruled line. Lead finish/Ball material values may wrap to two lines if the finish value exceeds the maximum column width.

Important Information and Disclaimer: The information provided on this page represents TI's knowledge and belief as of the date that it is provided. TI bases its knowledge and belief on information provided by third parties, and makes no representation or warranty as to the accuracy of such information. Efforts are underway to better integrate information from third parties. TI has taken and continues to take reasonable steps to provide representative and accurate information but may not have conducted destructive testing or chemical analysis on incoming materials and chemicals. TI and TI suppliers consider certain information to be proprietary, and thus CAS numbers and other limited information may not be available for release.

In no event shall TI's liability arising out of such information exceed the total purchase price of the TI part(s) at issue in this document sold by TI to Customer on an annual basis.

OTHER QUALIFIED VERSIONS OF INA290 :

- Automotive : INA290-Q1

NOTE: Qualified Version Definitions:

- Automotive - Q100 devices qualified for high-reliability automotive applications targeting zero defects

TAPE AND REEL INFORMATION

REEL DIMENSIONS

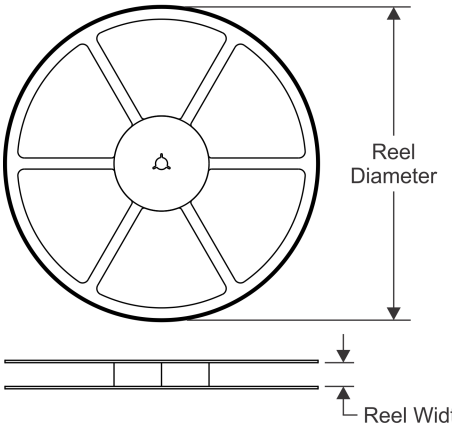

TAPE DIMENSIONS

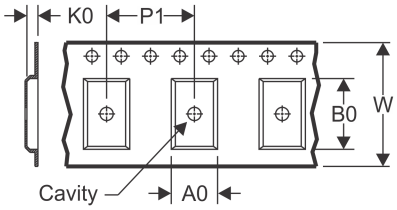

A0	Dimension designed to accommodate the component width
B0	Dimension designed to accommodate the component length
K0	Dimension designed to accommodate the component thickness
W	Overall width of the carrier tape
P1	Pitch between successive cavity centers

QUADRANT ASSIGNMENTS FOR PIN 1 ORIENTATION IN TAPE

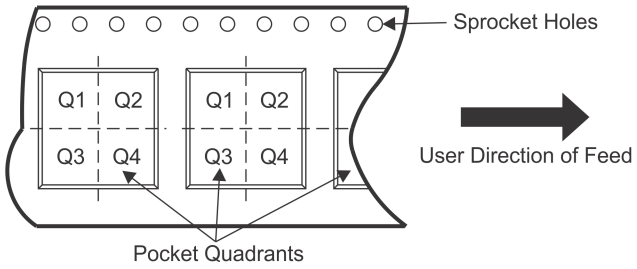

*All dimensions are nominal

Device	Package Type	Package Drawing	Pins	SPQ	Reel Diameter (mm)	Reel Width W1 (mm)	A0 (mm)	B0 (mm)	K0 (mm)	P1 (mm)	W (mm)	Pin1 Quadrant
INA2290A1IDGKR	VSSOP	DGK	8	2500	330.0	12.4	5.3	3.4	1.4	8.0	12.0	Q1
INA2290A1IDGKT	VSSOP	DGK	8	250	330.0	12.4	5.3	3.4	1.4	8.0	12.0	Q1
INA2290A2IDGKR	VSSOP	DGK	8	2500	330.0	12.4	5.3	3.4	1.4	8.0	12.0	Q1
INA2290A2IDGKT	VSSOP	DGK	8	250	330.0	12.4	5.3	3.4	1.4	8.0	12.0	Q1
INA2290A3IDGKR	VSSOP	DGK	8	2500	330.0	12.4	5.3	3.4	1.4	8.0	12.0	Q1
INA2290A3IDGKT	VSSOP	DGK	8	250	330.0	12.4	5.3	3.4	1.4	8.0	12.0	Q1
INA2290A4IDGKR	VSSOP	DGK	8	2500	330.0	12.4	5.3	3.4	1.4	8.0	12.0	Q1
INA2290A4IDGKT	VSSOP	DGK	8	250	330.0	12.4	5.3	3.4	1.4	8.0	12.0	Q1
INA2290A5IDGKR	VSSOP	DGK	8	2500	330.0	12.4	5.3	3.4	1.4	8.0	12.0	Q1
INA2290A5IDGKT	VSSOP	DGK	8	250	330.0	12.4	5.3	3.4	1.4	8.0	12.0	Q1
INA290A1IDCKR	SC70	DCK	5	3000	180.0	8.4	2.47	2.3	1.25	4.0	8.0	Q3
INA290A1IDCKT	SC70	DCK	5	250	180.0	8.4	2.47	2.3	1.25	4.0	8.0	Q3
INA290A2IDCKR	SC70	DCK	5	3000	180.0	8.4	2.47	2.3	1.25	4.0	8.0	Q3
INA290A2IDCKT	SC70	DCK	5	250	180.0	8.4	2.47	2.3	1.25	4.0	8.0	Q3
INA290A3IDCKR	SC70	DCK	5	3000	180.0	8.4	2.47	2.3	1.25	4.0	8.0	Q3
INA290A3IDCKT	SC70	DCK	5	250	180.0	8.4	2.47	2.3	1.25	4.0	8.0	Q3
INA290A4IDCKR	SC70	DCK	5	3000	180.0	8.4	2.47	2.3	1.25	4.0	8.0	Q3
INA290A4IDCKT	SC70	DCK	5	250	180.0	8.4	2.47	2.3	1.25	4.0	8.0	Q3

Device	Package Type	Package Drawing	Pins	SPQ	Reel Diameter (mm)	Reel Width W1 (mm)	A0 (mm)	B0 (mm)	K0 (mm)	P1 (mm)	W (mm)	Pin1 Quadrant
INA290A5IDCKR	SC70	DCK	5	3000	180.0	8.4	2.47	2.3	1.25	4.0	8.0	Q3
INA290A5IDCKT	SC70	DCK	5	250	180.0	8.4	2.47	2.3	1.25	4.0	8.0	Q3
INA4290A1IRGVR	VQFN	RGV	16	2500	330.0	12.4	4.25	4.25	1.15	8.0	12.0	Q2
INA4290A1IRGVT	VQFN	RGV	16	250	180.0	12.4	4.25	4.25	1.15	8.0	12.0	Q2
INA4290A2IRGVR	VQFN	RGV	16	2500	330.0	12.4	4.25	4.25	1.15	8.0	12.0	Q2
INA4290A2IRGVT	VQFN	RGV	16	250	180.0	12.4	4.25	4.25	1.15	8.0	12.0	Q2
INA4290A3IRGVR	VQFN	RGV	16	2500	330.0	12.4	4.25	4.25	1.15	8.0	12.0	Q2
INA4290A3IRGVT	VQFN	RGV	16	250	180.0	12.4	4.25	4.25	1.15	8.0	12.0	Q2
INA4290A4IRGVR	VQFN	RGV	16	2500	330.0	12.4	4.25	4.25	1.15	8.0	12.0	Q2
INA4290A4IRGVT	VQFN	RGV	16	250	180.0	12.4	4.25	4.25	1.15	8.0	12.0	Q2
INA4290A5IRGVR	VQFN	RGV	16	2500	330.0	12.4	4.25	4.25	1.15	8.0	12.0	Q2
INA4290A5IRGVT	VQFN	RGV	16	250	180.0	12.4	4.25	4.25	1.15	8.0	12.0	Q2

TAPE AND REEL BOX DIMENSIONS

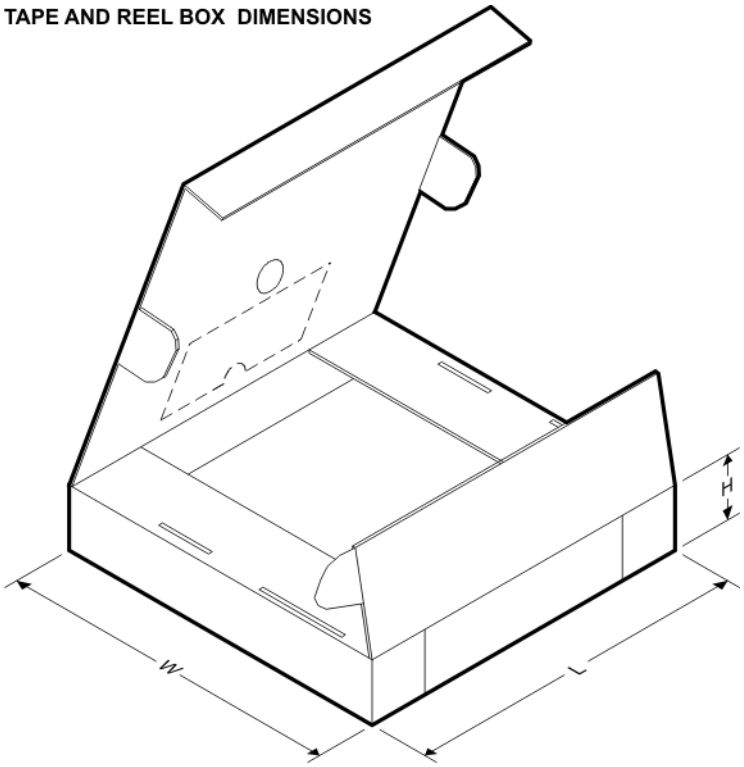

*All dimensions are nominal

Device	Package Type	Package Drawing	Pins	SPQ	Length (mm)	Width (mm)	Height (mm)
INA2290A1IDGKR	VSSOP	DGK	8	2500	366.0	364.0	50.0
INA2290A1IDGKT	VSSOP	DGK	8	250	366.0	364.0	50.0
INA2290A2IDGKR	VSSOP	DGK	8	2500	366.0	364.0	50.0
INA2290A2IDGKT	VSSOP	DGK	8	250	366.0	364.0	50.0
INA2290A3IDGKR	VSSOP	DGK	8	2500	366.0	364.0	50.0

Device	Package Type	Package Drawing	Pins	SPQ	Length (mm)	Width (mm)	Height (mm)
INA2290A3IDGKT	VSSOP	DGK	8	250	366.0	364.0	50.0
INA2290A4IDGKR	VSSOP	DGK	8	2500	366.0	364.0	50.0
INA2290A4IDGKT	VSSOP	DGK	8	250	366.0	364.0	50.0
INA2290A5IDGKR	VSSOP	DGK	8	2500	366.0	364.0	50.0
INA2290A5IDGKT	VSSOP	DGK	8	250	366.0	364.0	50.0
INA290A1IDCKR	SC70	DCK	5	3000	183.0	183.0	20.0
INA290A1IDCKT	SC70	DCK	5	250	183.0	183.0	20.0
INA290A2IDCKR	SC70	DCK	5	3000	183.0	183.0	20.0
INA290A2IDCKT	SC70	DCK	5	250	183.0	183.0	20.0
INA290A3IDCKR	SC70	DCK	5	3000	183.0	183.0	20.0
INA290A3IDCKT	SC70	DCK	5	250	183.0	183.0	20.0
INA290A4IDCKR	SC70	DCK	5	3000	183.0	183.0	20.0
INA290A4IDCKT	SC70	DCK	5	250	183.0	183.0	20.0
INA290A5IDCKR	SC70	DCK	5	3000	183.0	183.0	20.0
INA290A5IDCKT	SC70	DCK	5	250	183.0	183.0	20.0
INA4290A1IRGVR	VQFN	RGV	16	2500	367.0	367.0	35.0
INA4290A1IRGVT	VQFN	RGV	16	250	210.0	185.0	35.0
INA4290A2IRGVR	VQFN	RGV	16	2500	367.0	367.0	35.0
INA4290A2IRGVT	VQFN	RGV	16	250	210.0	185.0	35.0
INA4290A3IRGVR	VQFN	RGV	16	2500	367.0	367.0	35.0
INA4290A3IRGVT	VQFN	RGV	16	250	210.0	185.0	35.0
INA4290A4IRGVR	VQFN	RGV	16	2500	367.0	367.0	35.0
INA4290A4IRGVT	VQFN	RGV	16	250	210.0	185.0	35.0
INA4290A5IRGVR	VQFN	RGV	16	2500	367.0	367.0	35.0
INA4290A5IRGVT	VQFN	RGV	16	250	210.0	185.0	35.0

DCK (R–PDSO–G5) PLASTIC SMALL–OUTLINE PACKAGE

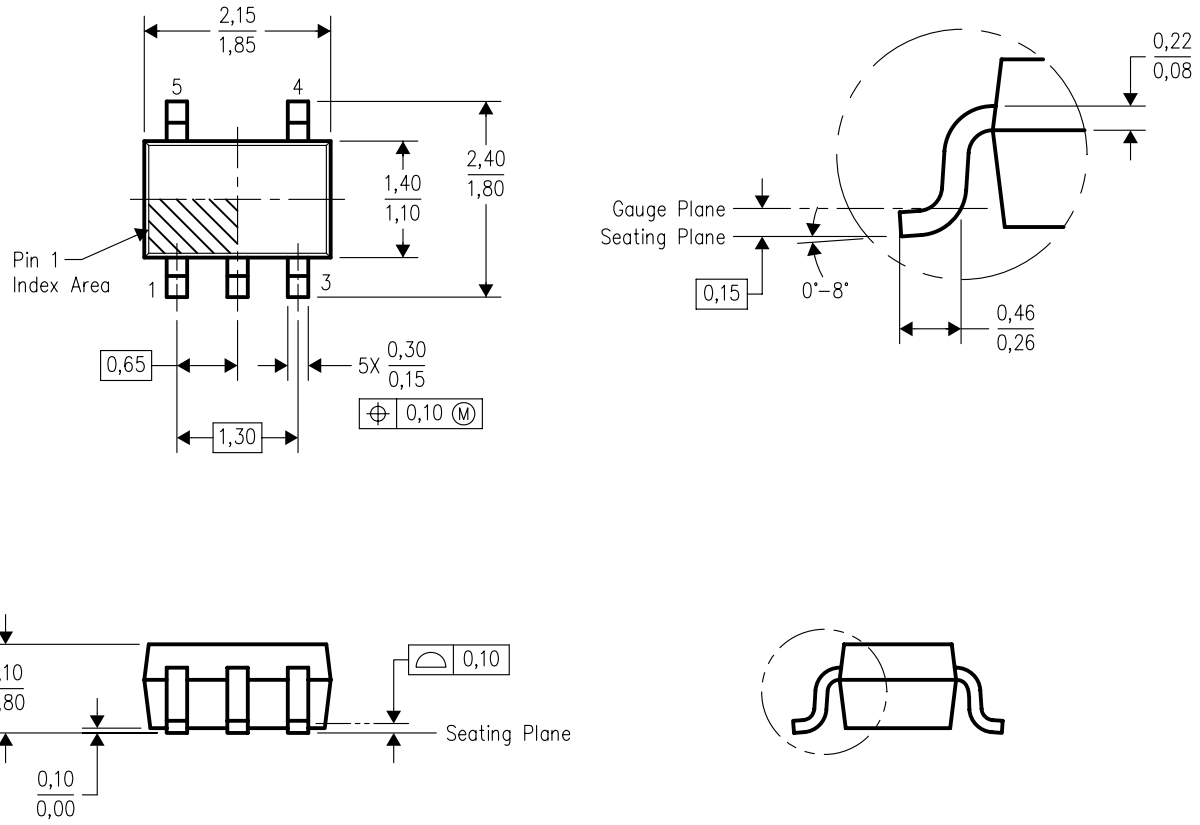

4093553–3/G 01/2007

NOTES:
A. All linear dimensions are in millimeters.
B. This drawing is subject to change without notice.
C. Body dimensions do not include mold flash or protrusion. Mold flash and protrusion shall not exceed 0.15 per side.
D. Falls within JEDEC MO–203 variation AA.

GENERIC PACKAGE VIEW

RGV 16

VQFN - 1 mm max height

4 x 4, 0.65 mm pitch

PLASTIC QUAD FLATPACK - NO LEAD

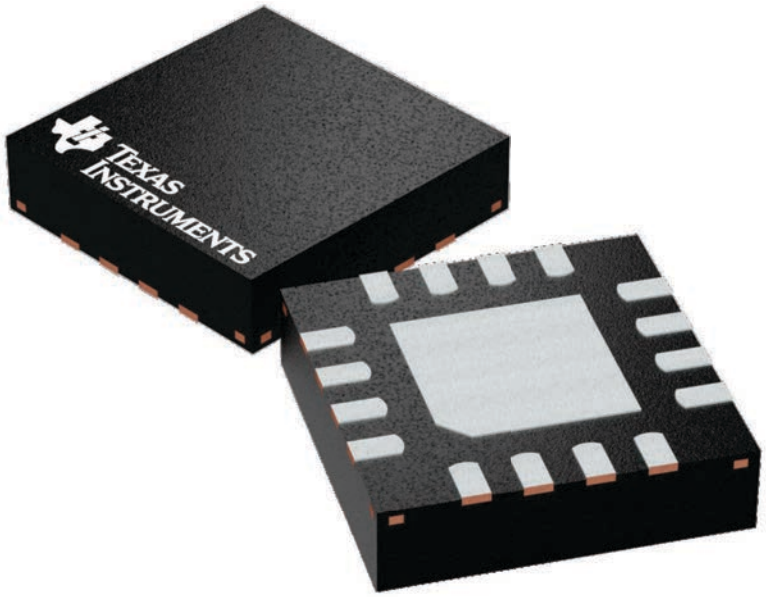

Images above are just a representation of the package family, actual package may vary.
Refer to the product data sheet for package details.

4224748/A

RGV0016A

PACKAGE OUTLINE

VQFN - 1 mm max height

PLASTIC QUAD FLATPACK - NO LEAD

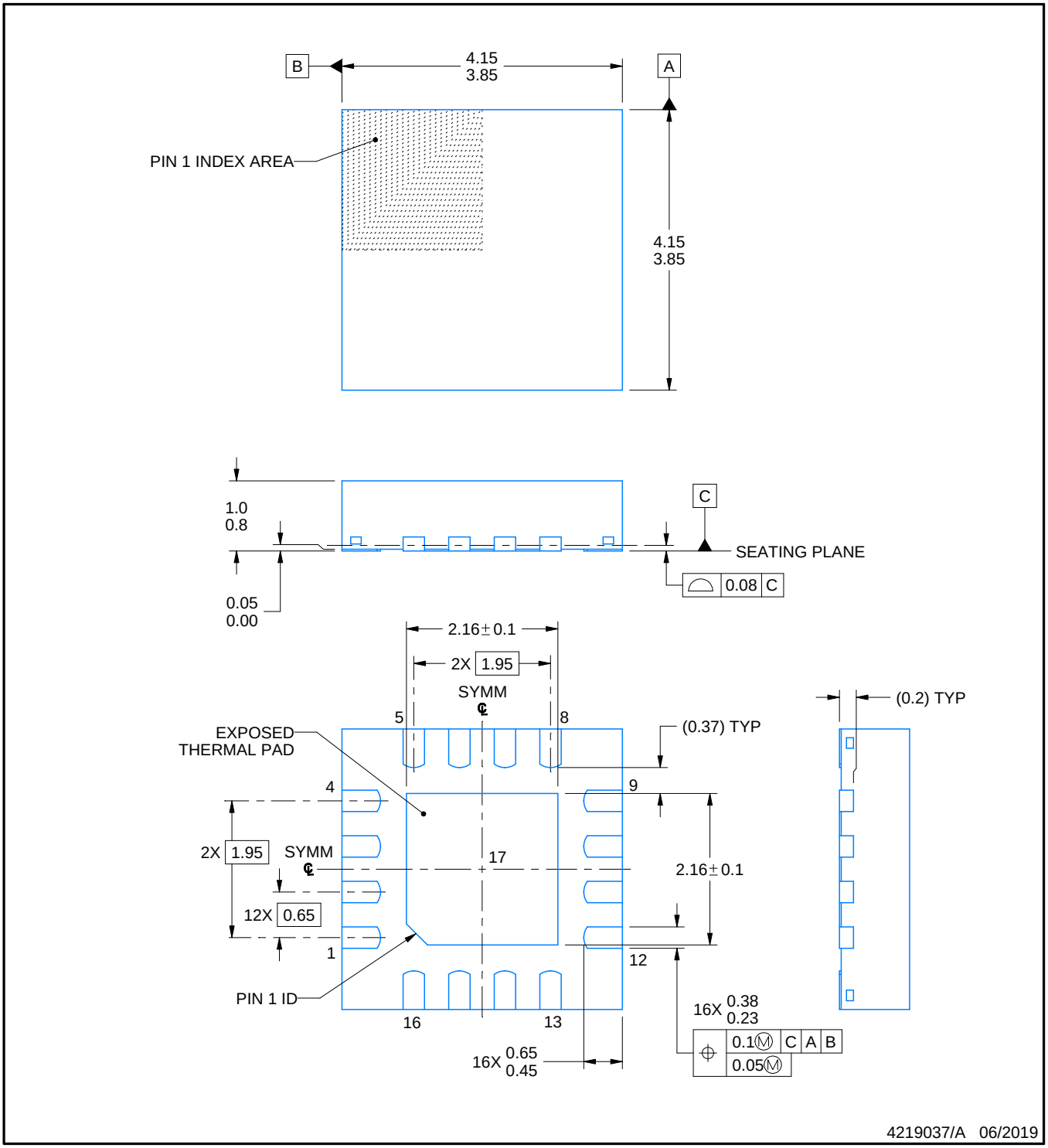

NOTES:

1. All linear dimensions are in millimeters. Any dimensions in parenthesis are for reference only. Dimensioning and tolerancing per ASME Y14.5M.
2. This drawing is subject to change without notice.
3. The package thermal pad must be soldered to the printed circuit board for thermal and mechanical performance.

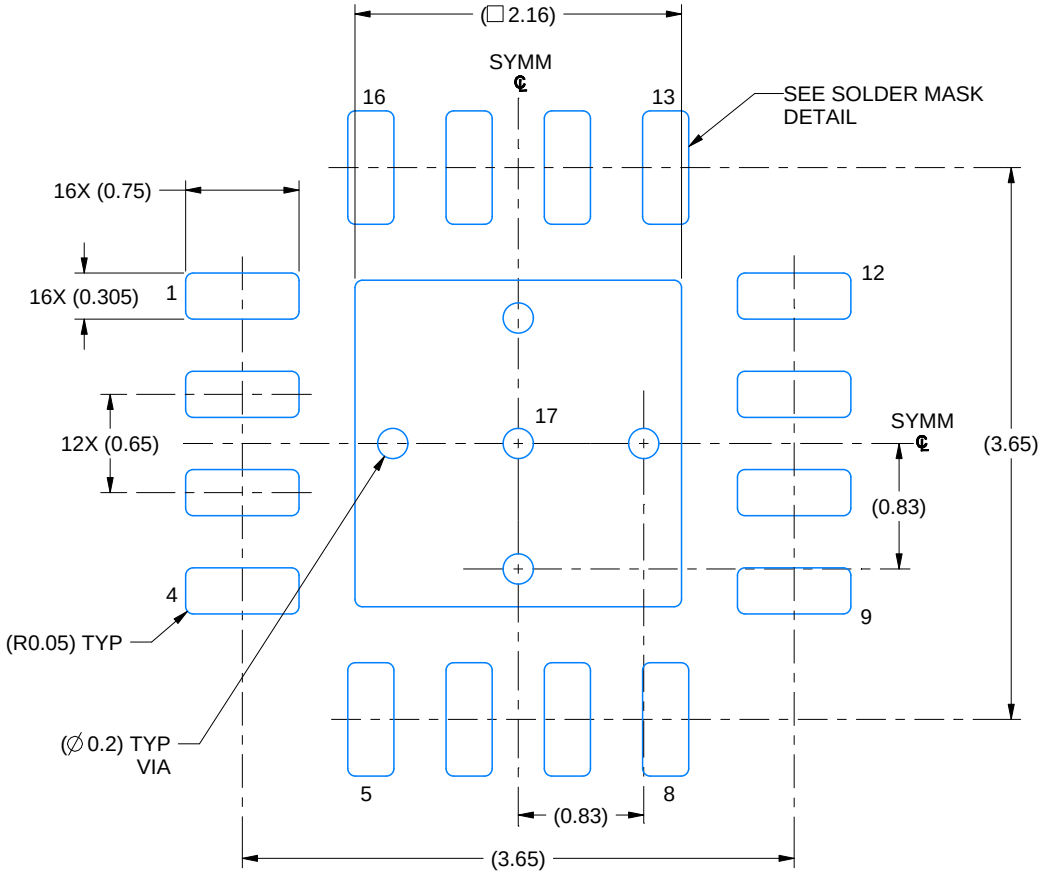

LAND PATTERN EXAMPLE
EXPOSED METAL SHOWN
SCALE: 20X

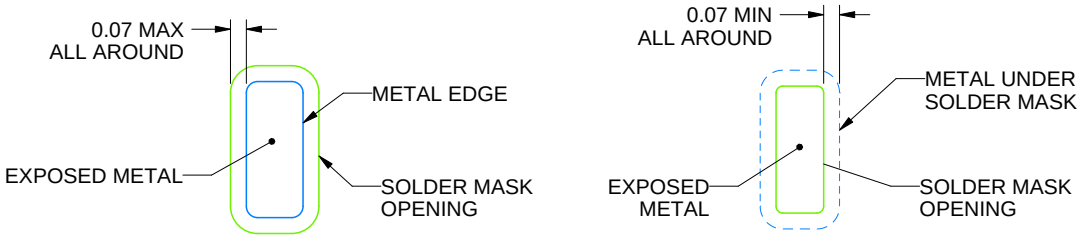

NON SOLDER MASK DEFINED (PREFERRED)

SOLDER MASK DEFINED

SOLDER MASK DETAILS

4219037/A 06/2019

NOTES: (continued)

4. This package is designed to be soldered to a thermal pad on the board. For more information, see Texas Instruments literature number SLUA271 (www.ti.com/lit/slua271).
5. Vias are optional depending on application, refer to device data sheet. If any vias are implemented, refer to their locations shown on this view. It is recommended that vias under paste be filled, plugged or tented.

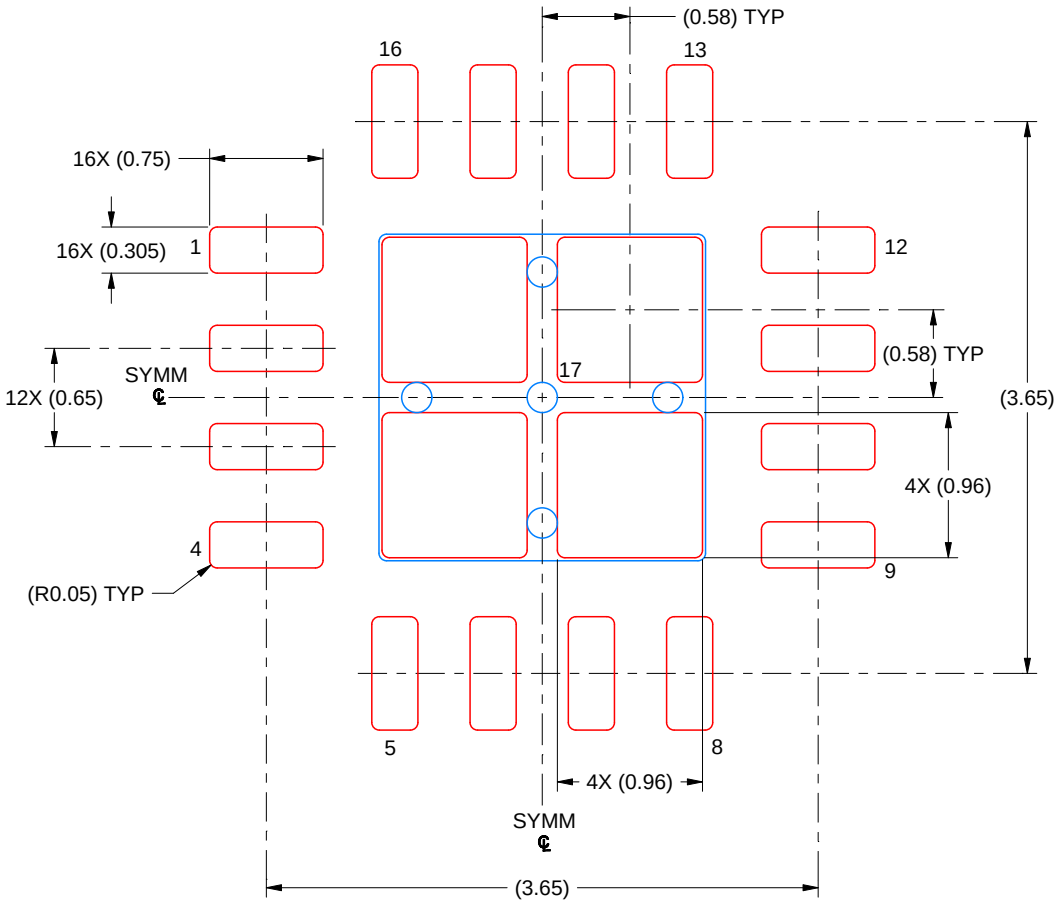

SOLDER PASTE EXAMPLE
BASED ON 0.125 MM THICK STENCIL
SCALE: 20X

EXPOSED PAD 17
79% PRINTED SOLDER COVERAGE BY AREA UNDER PACKAGE

4219037/A 06/2019

NOTES: (continued)

6. Laser cutting apertures with trapezoidal walls and rounded corners may offer better paste release. IPC-7525 may have alternate design recommendations.

DGK (S–PDSO–G8) PLASTIC SMALL–OUTLINE PACKAGE

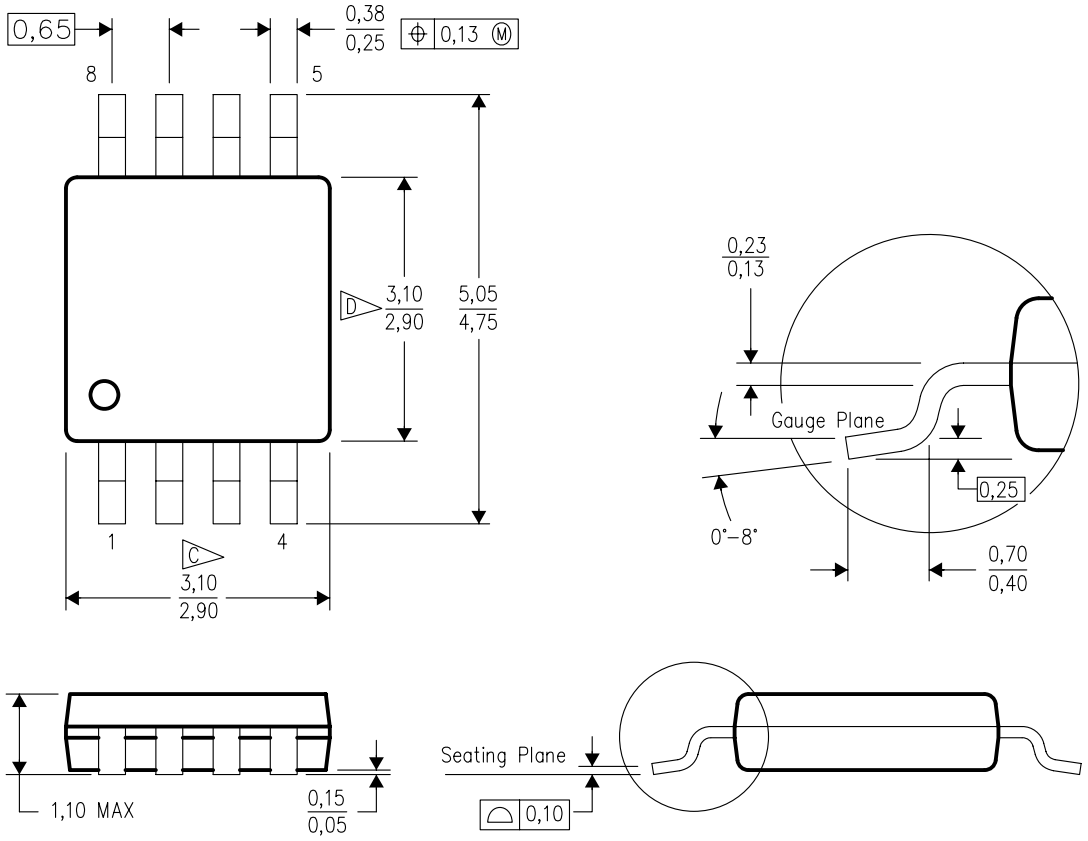

4073329/E 05/06

NOTES:
A. All linear dimensions are in millimeters.
B. This drawing is subject to change without notice.
C. Body length does not include mold flash, protrusions, or gate burrs. Mold flash, protrusions, or gate burrs shall not exceed 0.15 per end.
D. Body width does not include interlead flash. Interlead flash shall not exceed 0.50 per side.
E. Falls within JEDEC MO–187 variation AA, except interlead flash.

DGK (S–PDSO–G8) PLASTIC SMALL OUTLINE PACKAGE

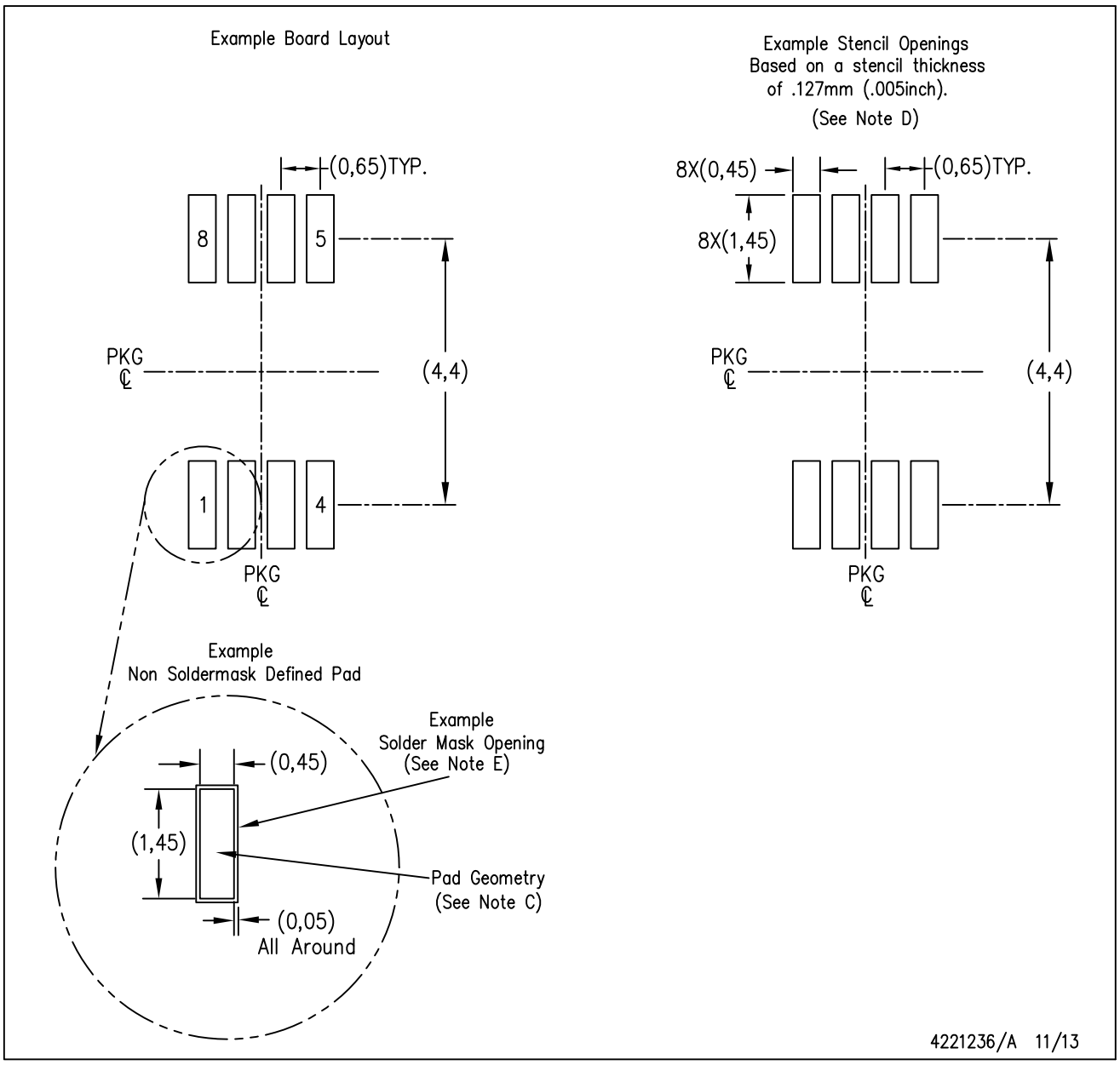

NOTES:
A. All linear dimensions are in millimeters.
B. This drawing is subject to change without notice.
C. Publication IPC–7351 is recommended for alternate designs.
D. Laser cutting apertures with trapezoidal walls and also rounding corners will offer better paste release. Customers should contact their board assembly site for stencil design recommendations. Refer to IPC–7525 for other stencil recommendations.
E. Customers should contact their board fabrication site for solder mask tolerances between and around signal pads.

重要声明和免责声明

TI“按原样”提供技术和可靠性数据（包括数据表）、设计资源（包括参考设计）、应用或其他设计建议、网络工具、安全信息和其他资源，不保证没有瑕疵且不做出任何明示或暗示的担保，包括但不限于对适销性、某特定用途方面的适用性或不侵犯任何第三方知识产权的暗示担保。

这些资源可供使用 TI 产品进行设计的熟练开发人员使用。您将自行承担以下全部责任：(1) 针对您的应用选择合适的 TI 产品，(2) 设计、验证并测试您的应用，(3) 确保您的应用满足相应标准以及任何其他功能安全、信息安全、监管或其他要求。

这些资源如有变更，恕不另行通知。TI 授权您仅可将这些资源用于研发本资源所述的 TI 产品的应用。严禁对这些资源进行其他复制或展示。您无权使用任何其他 TI 知识产权或任何第三方知识产权。您应全额赔偿因在这些资源的使用中对 TI 及其代表造成的任何索赔、损害、成本、损失和债务，TI 对此概不负责。

TI 提供的产品受 TI 的销售条款或 ti.com 上其他适用条款/TI 产品随附的其他适用条款的约束。TI 提供这些资源并不会扩展或以其他方式更改 TI 针对 TI 产品发布的适用的担保或担保免责声明。

TI 反对并拒绝您可能提出的任何其他或不同的条款。

邮寄地址：Texas Instruments, Post Office Box 655303, Dallas, Texas 75265
Copyright © 2021，德州仪器 (TI) 公司