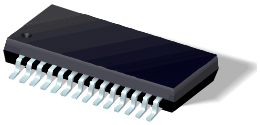

SBS V1.1-COMPLIANT GAS GAUGE IC

FEATURES

- **Provides Accurate Measurement of Available Charge in NiCd, NiMH, Li-Ion, and Lead-Acid Batteries**
- **Supports SBS Smart Battery Data Specification v1.1**
- **Supports the 2-Wire SMBus v1.1 Interface with PEC or 1-Wire HDQ16**
- **Reports Individual Cell Voltages**
- **Monitors and Provides Control to Charge and Discharge FETs in Li-Ion Protection Circuit**
- **Provides 15-Bit Resolution for Voltage, Temperature, and Current Measurements**
- **Measures Charge Flow Using a V-to-F Converter with Offset of Less Than 16 µV After Calibration**
- **Consumes Less Than 0.5 mW Operating**
- **Drives a 4- or 5-Segment LED Display for Remaining Capacity Indication**
- **28-Pin 150-mil SSOP**

DESCRIPTION

The bq2060 SBS-compliant gas gauge IC for battery pack or in-system installation maintains an accurate record of available charge in rechargeable batteries. The bq2060 monitors capacity and other critical battery parameters for NiCd, NiMH, Li-ion, and lead-acid chemistries. The bq2060 uses a V-to-F converter with automatic offset error correction for charge and discharge counting. For voltage, temperature, and current reporting, the bq2060 uses an A-to-D converter. The onboard ADC also monitors individual cell voltages in a Li-ion battery pack and allows the bq2060 to generate control signals that may be used with a pack supervisor to enhance pack safety.

The bq2060 supports the smart battery data (SBData) commands and charge-control functions. It communicates data using the system management bus (SMBus) 2-wire protocol or the Benchmarq 1-wire HDQ16 protocol. The data available include the battery's remaining capacity, temperature, voltage, current, and remaining run-time predictions. The bq2060 provides LED drivers and a push-button input to depict remaining battery capacity from full to empty in 20% or 25% increments with a 4- or 5-segment display.

The bq2060 works with an external EEPROM. The EEPROM stores the configuration information for the bq2060, such as the battery's chemistry, self-discharge rate, rate compensation factors, measurement calibration, and design voltage and capacity. The bq2060 uses the programmable self-discharge rate and other compensation factors stored in the EEPROM to accurately adjust remaining capacity for use and standby conditions based on time, rate, and temperature. The bq2060 also automatically calibrates or learns the true battery capacity in the course of a discharge cycle from near full to near empty levels.

The REG output regulates the operating voltage for the bq2060 from the battery cell stack using an external JFET.

PIN CONNECTIONS

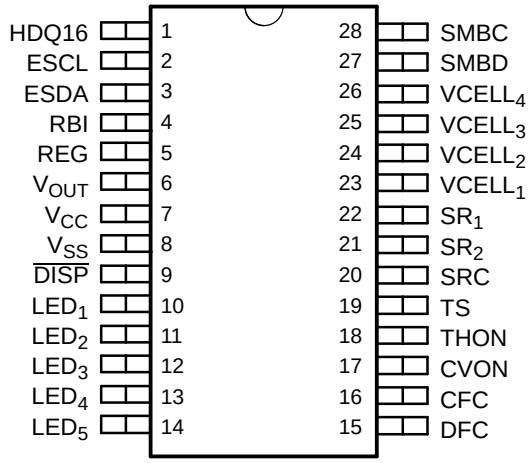

28-pin 150-mil SSOP

These devices have limited built-in ESD protection. The leads should be shorted together or the device placed in conductive foam during storage or handling to prevent electrostatic damage to the MOS gates.

Please be aware that an important notice concerning availability, standard warranty, and use in critical applications of Texas Instruments semiconductor products and disclaimers thereto appears at the end of this data sheet.

PRODUCTION DATA information is current as of publication date. Products conform to specifications per the terms of the Texas Instruments standard warranty. Production processing does not necessarily include testing of all parameters.

Copyright © 2000–2005, Texas Instruments Incorporated

PIN DESCRIPTIONS

TERMINAL		DESCRIPTION
NAME	NO.	
HDQ16	1	Serial communication input/output. Open-drain bidirectional communications port
ESCL	2	Serial memory clock. Output to clock the data transfer between the bq2060 and the external nonvolatile configuration memory
ESDA	3	Serial memory data and address. Bidirectional pin used to transfer address and data to and from the bq2060 and the external nonvolatile configuration memory
RBI	4	Register backup input. Input that provides backup potential to the bq2060 registers during periods of low operating voltage. RBI accepts a storage capacitor or a battery input.
REG	5	Regulator output. Output to control an n-JFET for V_{CC} regulation to the bq2060 from the battery potential
V_{OUT}	6	Supply output. Output that supplies power to the external EEPROM configuration memory
V_{CC}	7	Supply voltage input
V_{SS}	8	Ground.
$\overline{DISP}$	9	Display control input. Input that controls the LED drivers LED1–LED5
LED_1-LED_5	10,11,12, 13,14	LED display segment outputs. Outputs that each may drive an external LED
DFC	15	Discharge FET control output. Output to control the discharge FET in the Li-ion pack protection circuitry
CFC	16	Charge FET controll output. Output to control the charge FET in the Li-ion pack protection circuitry
CVON	17	Cell voltage divider controll output. Output control for external FETs to connect the cells to the external voltage dividers during cell voltage measurements
THON	18	Thermistor bias control output. Output control for external FETs to connect the thermistor bias resistor during a temperature measurement
TS	19	Thermistor voltage input. Input connection for a thermistor to monitor temperature
SRC	20	Current sense input. Input to monitor instantaneous current
SR_1-SR_2	21,22	Charge-flow sense resistor inputs. Input connections for a small value sense resistor to monitor the battery charge and discharge current flow
$VCELL_1$-$VCELL_4$	23,24,25,26	Single-cell voltage inputs. Inputs that monitor the series element cell voltages
SMBD	27	SMBus data. Open-drain bidirectional pin used to transfer address and data to and from the bq2060
SMBC	28	SMBus clock. Open-drain bidirectional pin used to clock the data transfer to and from the bq2060

ORDERING INFORMATION

For the most current package and ordering information, see the Package Option Addendum at the end of this document, or see the TI Web site at www.ti.com.

ABSOLUTE MAXIMUM RATINGS(1)

SYMBOL	PARAMETER	MIN	MAX	UNIT	NOTES
V_{CC}–Supply voltage	Relative to V_{SS}	–0.3	+6	V	
V_{IN}–All other pins	Relative to V_{SS}	–0.3	+6	V	
T_{OPR}	Operating temperature	–20	+70	°C	Commercial
T_J	Junction temperature	–40	+125	°C	

(1) Permanent device damage may occur if **absolute maximum ratings** are exceeded. Functional operation should be limited to the Recommended DC Operating Conditions detailed in this data sheet.

DC ELECTRICAL CHARACTERISTICS

(V_{CC} = 2.7 V to 3.7 V, T_{OPR} = –20°C to 70°C, unless otherwise noted)

SYMBOL	PARAMETER	TEST CONDITIONS	MIN	TYP	MAX	UNIT
V_{CC}	Supply voltage		2.7	3.3	3.7	V
I_{CC}	Operating current	V_{OUT} inactive		180	235	µ A
I_{SLP}	Low-power storage mode current	1.5 V < V_{CC} < 3.7 V		5	10	µ A
I_{LVOUT}	V_{OUT} leakage current	V_{OUT} inactive	– 0.2		0.2	µ A
I_{VOUT}	V_{OUT} source current	V_{OUT} active, V_{OUT} = V_{CC}– 0.6 V	– 5			mA
V_{OLS}	Output voltage low: LED_1–LED_5, CFC, DFC	I_{OLS} = 5 mA			0.4	V
	Output voltage low: THON, CVON	I_{OLS} = 5 mA			0.36	V
V_{IL}	Input voltage low $\overline{DISP}$		–0.3		0.8	V
V_{IH}	Input voltage high $\overline{DISP}$		2		V_{CC}+ 0.3	V
V_{OL}	Output voltage low SMBC, SMBD, HDQ16, ESCL, ESDA	I_{OL} = 1 mA			0.4	V
V_{ILS}	Input voltage low SMBC, SMBD, HDQ16, ESCL, ESDA		– 0.3		0.8	V
V_{IHS}	Input voltage high SMBC, SMBD, HDQ16, ESCL, ESDA		1.7		6	V
V_{AI}	Input voltage range $VCELL_{1–4}$, TS, SRC		V_{SS}– 0.3		1.25	V
I_{RB}	RBI data-retention input current	V_{RBI} > 3 V, V_{CC} < 2.0 V		10	50	nA
V_{RBI}	RBI data-retention voltage		1.3			V
Z_{AI1}	Input impedance: SR1, SR2	0–1.25 V	10			MΩ
Z_{AI2}	Input impedance: $VCELL_{1–4}$, TS, SRC	0–1.25 V	5			MΩ

VFC CHARACTERISTICS

(V_{CC} = 3.1 to 3.6 V, T_{OPR} = –0°C to 70°C, Unless Otherwise Noted

SYMBOL	PARMETER	TEST CONDITIONS	MIN	TYP	MAX	UNIT
V_{SR}	Input voltagerange,V_{SR2} and V_{SR1}	V_{SR} = V_{SR2}– V_{SR1}	– 0.25		+0.25	V
V_{SROS}	V_{SR} input offset	V_{SR2} = V_{SR1}, autocorrection disabled	–250	–50	250	µV
V_{SRCOS}	Calibrated offset		–16		+16	µ V
RM_{VCO}	Supply voltage gain coefficient(1)	V_{CC} = 3.3 V		0.8	1.2	%/V
RM_{TCO}	Temperature gain coefficient(1)	Slope for T_{OPR} = –20°C to 70°C	– 0.09		+0.09	% /°C
		Total deviation T_{OPR} = –20°C to 70°C	–1.6%		0.1%	
		Slope for T_{OPR} = –0°C to 50°C	–0.05		+0.05	% /°C
		Total deviation T_{OPR}= –0°C to 50°C	–0.6%		0.1%	
INL	Integral nonlinearity error	T_{OPR} = 0°C –50°C			0.21%	

(1) RM_{TCO} total deviation is from the nominal gain at 25°C.

REG CHARACTERISTICS

(T_{OPR} = –20°C to 70°C)

SYMBOL	PARAMETER	TEST CONDITIONS	MIN	TYP	MAX	UNIT
V_{RO}	Normal Mode: REG controlled output voltage	JFET: R_{ds}(on) < 150 Ω V_{gs}(off) < –3 V at 10 µA	3.1	3.3	3.6	V
	Sleep Mode: REG controlled output voltage				4.1	
I_{REG}	REG output current		1			µ A

SMBus AC SPECIFICATIONS

V_{CC} = 2.7 V to 3.7 V, T_{OPR} = –20°C to 70°C, unless otherwise noted

SYMBOL	PARAMETER	TEST CONDITIONS	MIN	TYP	MAX	UNIT
f_{SMB}	SMBus operating frequency	Slave mode, SMBC 50% duty cycle	10		100	kHz
f_{MAS}	SMBus master clock frequency	Master mode, no clock low slave extend		51.2		kHz
t_{BUF}	Bus free time between start and stop		4.7			µs
$t_{HD:STA}$	Hold time after (repeated) start		4			µ s
$t_{SU:STA}$	Repeated start setup time		4.7			µ s
$t_{SU:STO}$	Stop setup time		4			µ s
$t_{HD:DAT}$	Data hold time	Receive mode	0			ns
		Transmit mode	300			ns
$t_{SU:DAT}$	Data setup time		250			ns
$t_{TIMEOUT}$	Error signal/detect	See (1)	25		35	ms
t_{LOW}	Clock low period		4.7			µ s
t_{HIGH}	Clock high period	See (2)	4		50	µs
$t_{LOW:SEXT}$	Cumulative clock low slave extend time	See (3)			25	ms
$t_{LOW:MEXT}$	Cumulative clock low master extend time	See (4)			10	ms

(1) The bq2060 times out when any clock low exceeds $t_{TIMEOUT}$.
(2) $t_{HIGH\ Max}$ is minimum bus idle time. SMBC = SMBD = 1 for t > 50 ms causes reset of any transaction involving bq2060 that is in progress.
(3) $t_{LOW:SEXT}$ is the cumulative time a slave device is allowed to extend the clock cycles in one message from initial start to the stop. The bq2060 typically extends the clock only 20 ms as a slave in the read byte or write byte protocol.
(4) $t_{LOW:MEXT}$ is the cumulative time a master device is allowed to extend the clock cycles in one message from initial start to the stop. The bq2060 typically extends the clock only 20 ms as a master in the read byte or write byte protocol.

HDQ16 AC SPECIFICATIONS ()

V_{CC} = 2.7 V to 3.7 V, T_{OPR} = –20°C to 70°C, unless otherwise noted

SYMBOL	PARAMETER	TEST CONDITIONS	MIN	TYP	MAX	UNIT
t_{CYCH}	Cycle time, host to bq2060 (write)		190			µ s
t_{CYCB}	Cycle time, bq2060 to host (read)		190	205	250	µ s
t_{STRH}	Start hold time, host to bq2060 (write)		5	-	-	ns
t_{STRB}	Start hold time, host to bq2060 (read)		32	-	-	µ s
t_{DSU}	Data setup time		-	-	50	µ s
t_{DSUB}	Data setup time		-	-	50	µ s
t_{DH}	Data hold time		100	-	-	µ s
t_{DV}	Data valid time		80	-	-	µ s
t_{SSU}	Stop setup time		-	-	145	µ s
t_{SSUB}	Stop setup time		-	-	145	µ s
t_{RSPS}	Response time, bq2060 to host		190	-	320	µ s
t_{J}	Break time		190	-	-	µ s
t_{BR}	Break recovery time		40	-	-	µ s

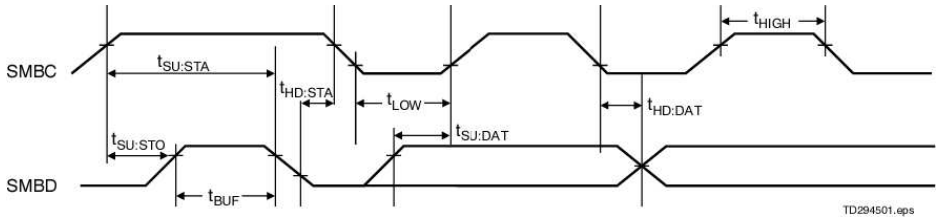

Figure 1. SMBus Timing Data

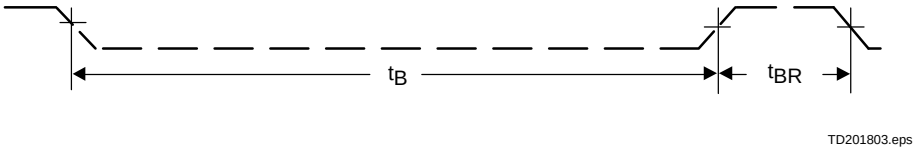

Figure 2. HDQ16 Break Timing

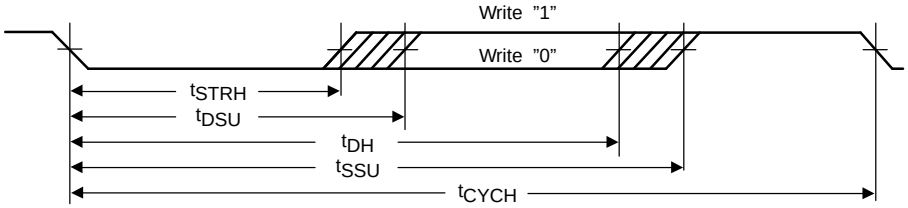

Figure 3. HDQ16 Host to bq2060

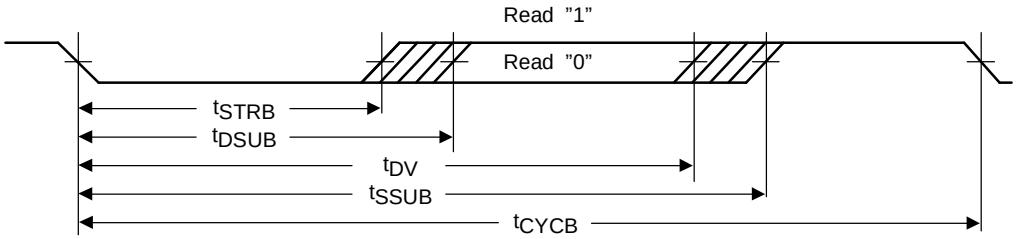

Figure 4. HDQ16 bq2060 to Host

FUNCTIONAL DESCRIPTION

GENERAL OPERATION

The bq2060 determines battery capacity by monitoring the amount of charge input to or removed from a rechargeable battery. In addition to measuring charge and discharge, the bq2060 measures battery voltage, temperature, and current, estimates battery self-discharge, and monitors the battery for low-voltage thresholds. The bq2060 measures charge and discharge activity by monitoring the voltage across a small-value series sense resistor between the battery's negative terminal and the negative terminal of the battery pack. The available battery charge is determined by monitoring this voltage and correcting the measurement for environmental and operating conditions.

Figure 5 shows a typical bq2060-based battery pack application. The circuit consists of the LED display, voltage and temperature measurement networks, EEPROM connections, a serial port, and the sense resistor. The EEPROM stores basic battery pack configuration information and measurement calibration values. The EEPROM must be programmed properly for bq2060 operation. Table 10 shows the EEPROM memory map and outlines the programmable functions available in the bq2060.

FUNCTIONAL DESCRIPTION (continued)

The bq2060 accepts an NTC thermistor (Semitec 103AT) for temperature measurement. The bq2060 uses the thermistor temperature to monitor battery pack temperature, detect a battery full charge condition, and compensate for self-discharge and charge/discharge battery efficiencies.

MEASUREMENTS

The bq2060 uses a fully differential, dynamically balanced voltage-to-frequency converter (VFC) for charge measurement and a sigma delta analog-to-digital converter (ADC) for battery voltage, current, and temperature measurement.

Voltage, current, and temperature measurements are made every 2 to 2.5 seconds, depending on the bq2060 operating mode. Maximum times occur with compensated EDV, mWh mode, and maximum allowable discharge rate. Any AtRate computations requested or scheduled (every 20 seconds) may add up to 0.5 second to the time interval.

Charge And Discharge Counting

The VFC measures the charge and discharge flow of the battery by monitoring a small-value sense resistor between the SR_1 and SR_2 pins as shown in Figure 5. The VFC measures bipolar signals up to 250 mV. The bq2060 detects charge activity when $V_{SR} = V_{SR2} – V_{SR1}$ is positive and discharge activity when $V_{SR} = V_{SR2}–V_{SR1}$ is negative. The bq2060 continuously integrates the signal over time using an internal counter. The fundamental rate of the counter is 6.25 µVh.

Offset Calibration

The bq2060 provides an auto-calibration feature to cancel the voltage offset error across SR_1 and SR_2 for maximum charge measurement accuracy. The calibration routine is initiated by issuing a command to ManufacturerAccess(). The bq2060 is capable of automatic offset calibration down to 6.25 µV. Offset cancellation resolution is less than 1 µV.

Digital Filter

The bq2060 does not measure charge or discharge counts below the digital filter threshold. The digital filter threshold is programmed in the EEPROM and should be set sufficiently high to prevent false signal detection with no charge or discharge flowing through the sense resistor.

Voltage

While monitoring SR_1 and SR_2 for charge and discharge currents, the bq2060 monitors the battery-pack potential and the individual cell voltages through the $VCELL_1$–$VCELL_4$ pins. The bq2060 measures the pack voltage and reports the result in the Voltage() register. The bq2060 can also measure the voltage of up to four series elements in a battery pack. The individual cell voltages are stored in the optional Manufacturer Function area.

The $VCELL_1$–$VCELL_4$ inputs are divided down from the cells using precision resistors, as shown in Figure 5. The maximum input for $VCELL_1$–$VCELL_4$ is 1.25 V with respect to VSS. The voltage dividers for the inputs must be set so that the voltages at the inputs do not exceed the 1.25 V limit under all operating conditions. Also, the divider ratios on $VCELL_1$–$VCELL_2$ must be half of that of $VCELL_3$–$VCELL_4$. To reduce current consumption from the battery, the CVON output may used to connect the divider to the cells only during measurement period. CVON is high impedance for 250 ms (12.5% duty cycle) when the cells are measured, and driven low otherwise. See Table 1.

Current

The SRC input of the bq2060 measures battery charge and discharge current. The SRC ADC input converts the current signal from the series sense resistor and stores the result in Current(). The full-scale input range to SBC is limited to ±250 mV as shown in Table 2.

FUNCTIONAL DESCRIPTION (continued)

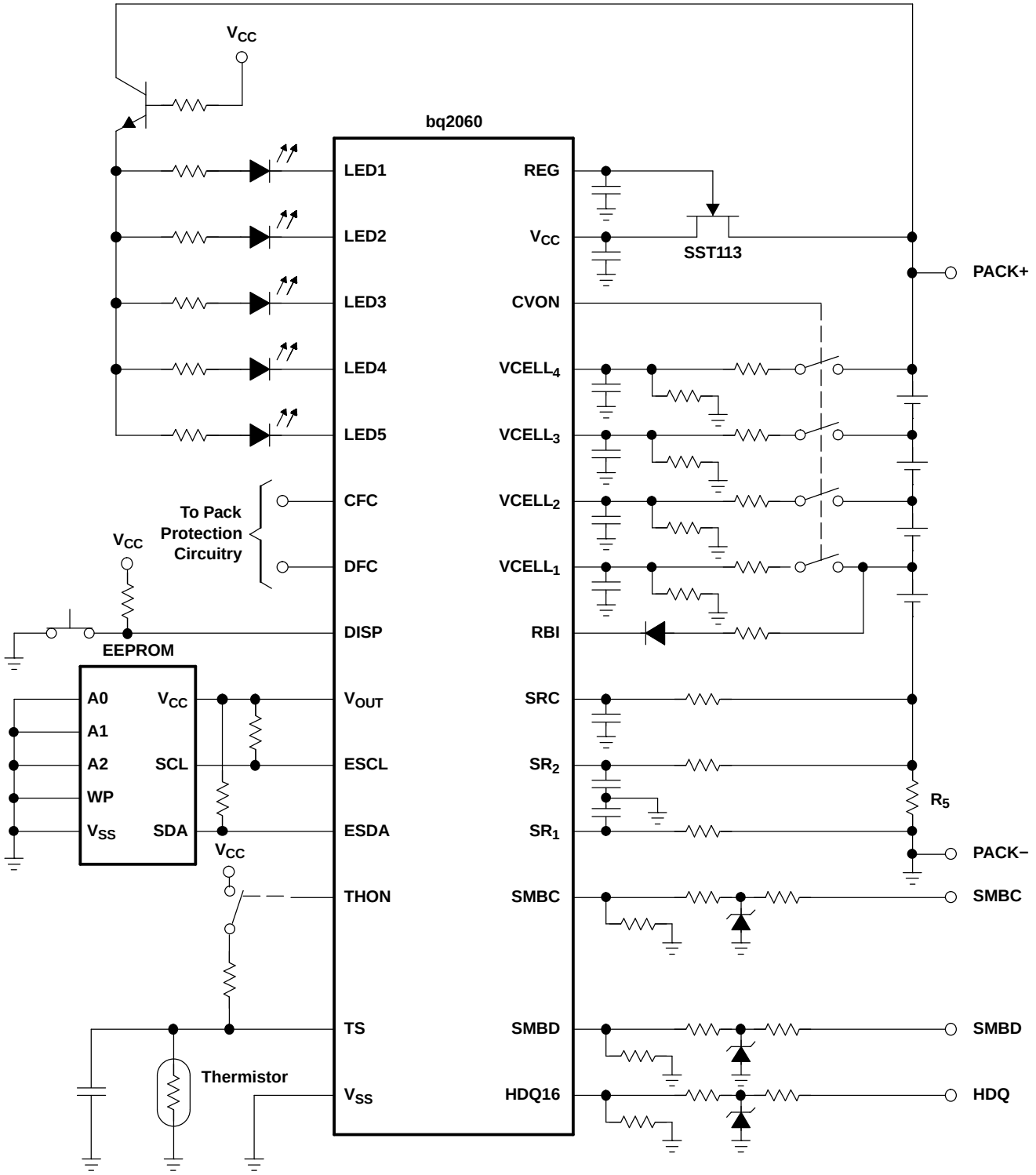

Figure 5. Battery Pack Application Diagram–LED Display and Series Cell Monitoring

Table 1. Example VCELL1–VCELL4 Divider and Input Range

VOLTAGE INPUT	VOLTAGE DIVISION RATIO	FULL-SCALE INPUT (V)
$VCELL_4$	16	20
$VCELL_3$	16	20
$VCELL_2$	8	10
$VCELL_1$	8	10

Table 2. SRC Input Range

SENSE RESISTOR (Ω)	FULL-SCALE INPUT (A)
0.02	±12.5
0.03	±8.3
0.05	±5.0
0.10	±2.5

Temperature

The TS input of the bq2060 with an NTC thermistor measures the battery temperature as shown in Figure 5. The bq2060 reports temperature in Temperature(). THON may be used to connect the bias source to the thermistor when the bq2060 samples the TS input. THON is high impedance for 60 ms when the temperature is measured, and driven low otherwise.

GAS GAUGE OPERATION

General

The operational overview in Figure 6 illustrates the gas gauge operation of the bq2060. Table 3 describes the bq2060 registers.

The bq2060 accumulates a measure of charge and discharge currents and estimates self-discharge of the battery. The bq2060 compensates the charge current measurement for temperature and state-of-charge of the battery. The bq2060 also adjusts the self-discharge estimation based on temperature.

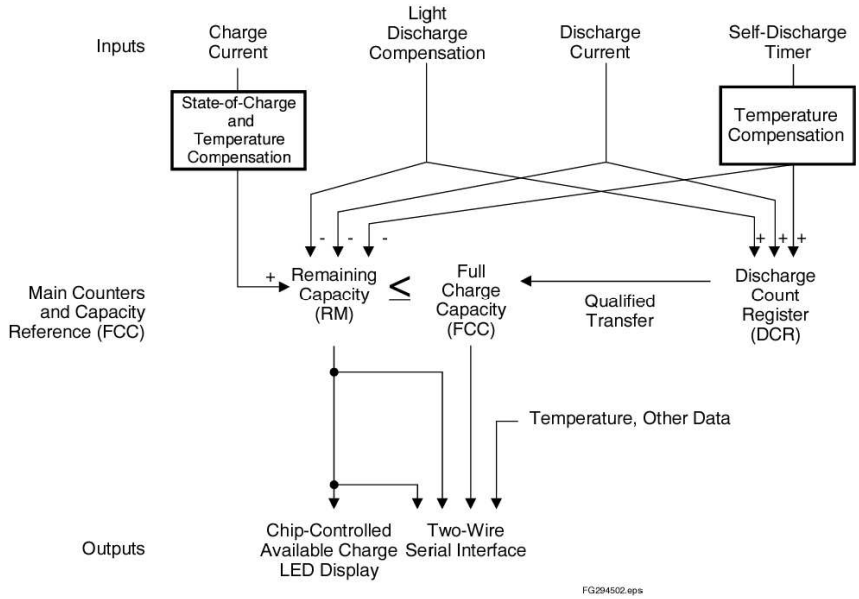

Figure 6. bq2060 Operational Overview

The main counter RemainingCapacity() (RM) represents the available capacity or energy in the battery at any given time. The bq2060 adjusts RM for charge, self-discharge, and leakage compensation factors. The information in the RM register is accessible through the communications ports and is also represented through the LED display.

The FullChargeCapacity() (FCC) register represents the last measured full discharge of the battery. It is used for the battery's full-charge reference for relative capacity indication. The bq2060 updates FCC when the battery undergoes a qualified discharge from nearly full to a low battery level. FCC is accessible through the serial communications ports.

The Discharge Count Register (DCR) is a non-accessible register that only tracks discharge of the battery. The bq2060 uses the DCR register to update the FCC register if the battery undergoes a qualified discharge from nearly full to a low battery level. In this way, the bq2060 learns the true discharge capacity of the battery under system-use conditions.

Main Gas Gauge Registers

RemainingCapacity() (RM)

RM represents the remaining capacity in the battery. The bq2060 computes RM in either mAh or 10 mWh depending on the selected mode.

On initialization, the bq2060 sets RM to 0. RM counts up during charge to a maximum value of FCC and down during discharge and self-discharge to 0. In addition to charge and self-discharge compensation, the bq2060 calibrates RM at three low-battery-voltage thresholds, EDV2, EDV1, and EDV0 and three programmable midrange thresholds VOC25, VOC50, and VOC75. This provides a voltage-based calibration to the RM counter.

DesignCapacity() (DC)

The DC is the user-specified battery full capacity. It is calculated from Pack Capacity EE 0x3a–0x3b and is represented in mAh or 10 mWh. It also represents the full-battery reference for the absolute display mode.

FullChargeCapacity() (FCC)

FCC is the last measured discharge capacity of the battery. It is represented in either mAh or 10 mWh depending on the selected mode. On initialization, the bq2060 sets FCC to the value stored in *Last Measured Discharge* EE 0x38–0x39. During subsequent discharges, the bq2060 updates FCC with the last measured discharge capacity of the battery. The last measured discharge of the battery is based on the value in the DCR register after a qualified discharge occurs. Once updated, the bq2060 writes the new FCC value to EEPROM in mAh to *Last Measured Discharge.* FCC represents the full-battery reference for the relative display mode and relative state of charge calculations.

Discharge Count Register (DCR)

The DCR register counts up during discharge, independent of RM. DCR can continue to count even after RM has counted down to 0. Prior to RM = 0, discharge activity, light discharge estimation and self-discharge increment DCR. After RM = 0, only discharge activity increments DCR. The bq2060 initializes DCR to FCC – RM when RM is within twice the programmed value in *Near Full* EE 0x55. The DCR initial value of FCC – RM is reduced by FCC/128 if SC = 0 (bit 2 in Control Mode) and is not reduced if SC = 1. DCR stops counting when the battery voltage reaches the EDV2 threshold on discharge.

Capacity Learning (FCC Update) And Qualified Discharge

The bq2060 updates FCC with an amount based on the value in DCR if a qualified discharge occurs. The new value for FCC equals the DCR value plus the programmable nearly full- and low-battery levels, according to the following equation:

$$\begin{aligned} &\text{FCC(new)} = \text{DCR(final)} = \\ &\text{DCR(initial)} + \text{measureddischarge to EDV2} \\ &+ (\text{FCCxBatteryLow\%}) \end{aligned} \tag{1}$$

where:

BatteryLow% = (value stored in EE 0x54) ÷ 2.56

A qualified discharge occurs if the battery discharges from RM ≥ FCC –*Near Full* * 2 to the EDV2 voltage threshold with the following conditions:

- No valid charge activity occurs during the discharge period. A valid charge is defined as an input 10 mAh into the battery.
- No more than 256 mAh of self-discharge and/or light discharge estimation occurs during the discharge period.
- The temperature does not drop below 5°C during the discharge period.
- The battery voltage reaches the EDV2 threshold during the discharge period and the voltage was less than the EDV2 threshold minus 256 mV when bq2060 detected EDV2.
- No midrange voltage correction occurs during the discharge period.

FCC cannot be reduced by more than 256 mAh or increased by more than 512 mAh during any single update cycle. The bq2060 saves the new FCC value to the EEPROM within 4 s of being updated.

Table 3. bq2060 Register Functions

FUNCTION	COMMAND CODE		SMBus ACCESS	UNITS
	SMBus	HDQ16		
ManufacturerAccess	0x00	0x00	read/write	n/a
RemainingCapacityAlarm	0x01	0x01	read/write	mAh, 10 mWh
RemainingTimeAlarm	0x02	0x02	read/write	minutes
BatteryMode	0x03	0x03	read/write	n/a
AtRate	0x04	0x04	read/write	mAh, 10 mWh
AtRateTimeToFull	0x05	0x05	read	minutes
AtRateTimeToEmpty	0x06	0x06	read	minutes
AtRateOK	0x07	0x07	read	Boolean
Temperature	0x08	0x08	read	0.1°K
Voltage	0x09	0x09	read	mV
Current	0x0a	0x0a	read	mA
AverageCurrent	0x0b	0x0b	read	mA
MaxError	0X0c	0X0c	read	percent
RelativeStateOfCharge	0x0d	0x0d	read	percent
AbsoluteStateOfCharge	0x0e	0x0e	read	percent
RemainingCapacity	0x0f	0x0f	read	mAh, 10 mWh
FullChargeCapacity	0x10	0x10	read	mAh, 10 mWh
RunTimeToEmpty	0x11	0x11	read	minutes
AverageTimeToEmpty	0x12	0x12	read	minutes
AverageTimeToFull	0x13	0x13	read	minutes
ChargingCurrent	0x14	0x14	read	mA
ChargingVoltage	0x15	0x15	read	mV
Battery Status	0x16	0x16	read	n/a
CycleCount	0x17	0x17	read	cycles
DesignCapacity	0x18	0x18	read	mAh, 10 mWh
DesignVoltage	0x19	0x19	read	mV
SpecificationInfo	0x1a	0x1a	read	n/a
ManufactureDate	0x1b	0x1b	read	n/a
SerialNumber	0x1c	0x1c	read	Integer
Reserved	0x1d-0x1f	0x1d-0x1f	-	-
ManufacturerName	0x20	0x20-0x25	read	string
DeviceName	0x21	0x28-0x2b	read	string
DeviceChemistry	0x22	0x30-0x32	read	string
ManufacturerData	0x23	0x38-0x3b	read	string

Table 3. bq2060 Register Functions (continued)

FUNCTION	COMMAND CODE		SMBus ACCESS	UNITS
	SMBus	HDQ16		
Pack Status	0x2f (LSB)	0x2f (LSB)	read/write	n/a
Pack Configuration	0x2f (MSB)	0x2f (MSB)	read/write	n/a
VCELL4	0x3c	0x3c	read/write	mV
VCELL3	0x3d	0x3d	read/write	mV
VCELL2	0x3e	0x3e	read/write	mV
VCELL1	0x3f	0x3f	read/write	mV

Table 4. State of Charge Based on Low Battery Voltage

THRESHOLD	STATE OF CHARGE IN RM
EDV0	0%
EDV1	3%
EDV2	*Battery Low %*

End-of-Discharge Thresholds And Capacity Correction

The bq2060 monitors the battery for three low-voltage thresholds, EDV0, EDV1, and EDV2. The EDV thresholds are programmed in *EDVF/EDV0* EE 0x72–0x73, *EMF/EDV1* EE 0x74–0x75, and *EDV C1/C0 Factor/ EDV2* EE 0x78–0x79. If the CEDV bit in Pack Configuration is set, automatic EDV compensation is enabled and the bq2060 computes the EDV0, EDV1, and EDV2 thresholds based on the values in EE 0x72–0x7d, 0x06, and the battery's current discharge rate, temperature, capacity, and cycle count. The bq2060 disables EDV detection if Current() exceeds the *Overload Current* threshold programmed in EE 0x46 - EE 0x47. The bq2060 resumes EDV threshold detection after Current() drops below the overload current threshold. Any EDV threshold detected is reset after a 10-mAh charge is applied.

The bq2060 uses the thresholds to apply voltage-based corrections to the RM register according to Table 4.

The bq2060 adjusts RM as it detects each threshold. If the voltage threshold is reached before the corresponding capacity on discharge, the bq2060 reduces RM to the appropriate amount as shown in Table 4. If RM reaches the capacity level before the voltage threshold is reached on discharge, the bq2060 prevents RM from decreasing until the battery voltage reaches the corresponding threshold.

Self-Discharge

The bq2060 estimates the self-discharge of the battery to maintain an accurate measure of the battery capacity during periods of inactivity. The algorithm for self-discharge estimation takes a programmed estimate for the expected self-discharge rate at 25°C stored in EEPROM and makes a fixed reduction to RM of an amount equal to RemainingCapacity()/256. The bq2060 makes the fixed reduction at a varying time interval that is adjusted to achieve the desired self-discharge rate. This method maintains a constant granularity of 0.39% for each self-discharge adjustment, which may be performed multiple times per day, instead of once per day with a potentially large reduction.

The self-discharge estimation rate for 25°C is doubled for each 10 degrees above 25°C or halved for each 10 degrees below 25°C. The following table shows the relation of the self-discharge estimation at a given temperature to the rate programmed for 25°C (Y% per day):

TEMPERATURE (C)	SELF-DISCHARGE RATE
Temp < 10	¼Y% per day
10 ≤ Temp <20	½Y% per day
20 ≤ Temp <30	Y% per day
30 ≤ Temp <40	2Y% per day
40 ≤ Temp <50	4Y% per day
50 ≤ Temp <60	8Y% per day
60 ≤ Temp <70	16Y% per day
70 ≤ Temp	32Y% per day

The interval at which RM is reduced is given by the following equation, where n is the appropriate factor of 2 n = ¼ , ½ , 1, 2, . . .):

$$\text{Self-DischargeUpdateTime} = \frac{640 \times 13500}{256 \times n \times (\text{Y\% per day})} \text{ seconds} \quad (2)$$

The timer that keeps track of the self-discharge update time is halted whenever charge activity is detected. The timer is reset to zero if the bq2060 reaches the RemainingCapacity()=FullChargeCapacity() condition while charging.

Example: If T = 35°C (n = 2) and programmed self-discharge rate Y is 2.5 (2.5% per day at 25°C), the bq2060 reduces RM by RM/256 (0.39%) every

$$\frac{640 \times 13500}{256 \times n \times (\text{Y\% per day})} = 6750 \text{ seconds} \quad (3)$$

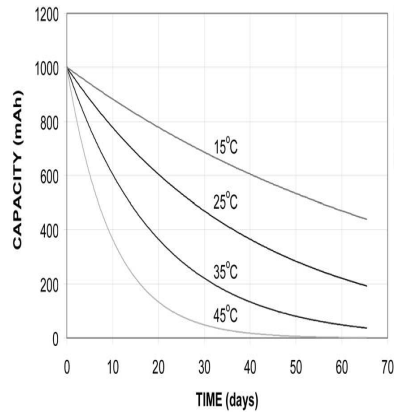

Figure 7. Self-Discharge at 2.5%/Day @25°C

This means that a 0.39% reduction of RM is made 12.8 times per day to achieve the desired 5% per day reduction at 35°C.

Figure 7 illustrates how the self-discharge estimate algorithm adjusts RemainingCapacity() versus temperature.

Light Discharge Or Suspend Current Compensation

The bq2060 can be configured in two ways to compensate for small discharge currents that produce a signal below the digital filter. First, the bq2060 can decrement RM and DCR at a rate determined by the value stored in *Light Discharge Current* EE 0x2b when it detects no discharge activity and the SMBC and SMBD lines are high. *Light Discharge Current* has a range of 44 µA to 11.2 mA.

Alternatively, the bq2060 can be configured to disable the digital filter for discharge when the SMBC and SMBD lines are high. In this way, the digital filter does not mask the leakage current signal. The bq2060 is configured in this mode by setting the NDF bit in *Control Mode*.

Midrange Capacity Corrections

The bq2060 applies midrange capacity corrections when the VCOR bit is set in *Pack Configuration*. The bq2060 adjusts RM to the associated percentage at three different voltage levels: VOC25, VOC50, and VOC75. The VOC values represent the open-circuit battery voltage which RM corresponds to the associated state of charge for each threshold.

THRESHOLD	ASSOCIATED STATE OF CHARGE
VOC25	25%
VOC50	50%
VOC75	75%

For the midrange corrections to occur, the temperature must be in the range of 19°C to 31°C inclusive and the Current() and AverageCurrent() must both be between –64 mA and 0. The bq2060 makes midrange corrections as shown in Table 5.

Table 5. Midrange Corrections

CONDITION		RESULT
Voltage()	≥ VOC75 and RelativeStateOfCharge() ≤ 63%	RelativeStateOfCharge() set to 75%
	< VOC75 and RelativeStateOfCharge() ≥ 87%	RelativeStateOfCharge() set to 75%
	≥ VOC50 and RelativeStateOfCharge() ≤ 38%	RelativeStateOfCharge() set to 50%
	< VOC50 and RelativeStateOfCharge() ≥ 62%	RelativeStateOfCharge() set to 50%
	≥ VOC25 and RelativeStateOfCharge() ≤ 13%	RelativeStateOfCharge() set to 25%
	< VOC25 and RelativeStateOfCharge() ≥ 37%	RelativeStateOfCharge() set to 25%

Charge Control

Charging Voltage and Current Broadcasts

The bq2060 supports SBS charge control by broadcasting the ChargingCurrent() and ChargingVoltage() to the Smart Charger address. The bq2060 broadcasts the requests every 10 s. The bq2060 updates the values used the charging current and voltage broadcasts based on the battery's state of charge, voltage, and temperature. The fast-charge rate is programmed in *Fast-Charging Current* EE 0x1a - 0x1b while the charge voltage is programmed in *Charging Voltage* EE 0x0a-0x0b.

The bq2060 internal charge control is compatible with popular rechargeable chemistries. The primary charge-termination techniques include a change in temperature over a change in time ($\Delta T/\Delta t$) and current taper, for nickel-based and Li-ion chemistries, respectively. The bq2060 also provides pre-charge qualification and a number of safety charge suspensions based on current, voltage, temperature, and state of charge.

Alarm Broadcasts to Smart Charger and Host

If any of the bits 8–15 in BatteryStatus() is set, the bq2060 broadcasts an AlarmWarning() message to the Host address. If any of the bits 12–15 in BatteryStatus() are set, the bq2060 also sends an AlarmWarning() message to the Smart Charger address. The bq2060 repeats the AlarmWarning() message every 10 s until the bits are cleared.

Pre-Charge Qualification

The bq2060 sets ChargingCurrent() to the pre-charge rate as programmed in *Pre-Charge Current* EE 0x1e-0x1f under the following conditions:

- **Voltage**: The bq2060 requests the pre-charge charge rate when Voltage() drops below the EDV0 threshold (compensated or fixed EDVs). Once requested, a pre-charge rate remains until Voltage() increases above the EDVF threshold. The bq2060 also broadcasts the pre-charge value immediately after a device reset until Voltage() is above the EDVF threshold. This threshold is programmed in *EDVF/EDV0* EE 0x72-0x73.
- **Temperature**: The bq2060 requests the pre-charge rate when Temperature() is between 0°C and 5°C. Temperature() must rise above 5°C before the bq2060 requests the fast-charge rate.

Charge Suspension

The bq2060 may temporarily suspend charge if it detects a charging fault. A charging fault includes the following conditions.

- **Overcurrent**: An overcurrent condition exists when the bq2060 measures the charge current to be more than the *Overcurrent Margin* above the ChargingCurrent(). *Overcurrent Margin* is programmed in EE 0x49. On detecting an overcurrent condition, the bq2060 sets the ChargingCurrent() to zero and sets the TERMINATE_CHARGE_ALARM bit in Battery Status(). The overcurrent condition and TERMINATE_CHARGE_ALARM are cleared when the measured current drops below the ChargingCurrent plus the *Overcurrent Margin*.

- **Overvoltage**: An overvoltage condition exists when the bq2060 measures the battery voltage to be more than the *Overvoltage Margin* above the ChargingVoltage() or a Li-ion cell voltage has exceeded the overvoltage limit programmed in *Cell Under-/Overvoltage. Overvoltage Margin* is programmed in EE 0x48 and *Cell Under-/Overvoltage* in EE 0x4a (least significant nibble). On detecting an overvoltage condition, the bq2060 sets the ChargingCurrent() to zero and sets the TERMINATE_CHARGE_ALARM bit in BatteryStatus(). The bq2060 clears the TERMINATE_ CHARGE_ALARM bit when it detects that the battery is no longer being charged (DISCHARGING bit set in BatteryStatus()). The bq2060 continues to broadcast zero charging current until the overvoltage condition is cleared. The overvoltage condition is cleared when the measured battery voltage drops below the ChargingVoltage() plus the *Overvoltage Margin* or when the CVOV bit is reset.
- **Over-Temperature**: An over-temperature condition exists when Temperature() is greater than or equal to the *Max T* value programmed in EE 0x45 (most significant nibble). On detecting an over-temperature condition, the bq2060 sets the ChargingCurrent() to zero and sets the OVER_TEMP_ALARM and TERMINATE_CHARGE_ ALARM bit in BatteryStatus() and the CVOV bit in Pack Status. The over-temperature condition is cleared when Temperature() is equal to or below (*Max T*– 5°C).
- **Overcharge**: An overcharge condition exists if the battery is charged more than the *Maxmum Overcharge* value after RM = FCC. *Maximum Overcharge* is programmed in EE 0x2e–0x2f. On detecting an overcharge condition, the bq2060 sets the ChargingCurrent() to zero and sets the OVER_CHARGED_ALARM, TERMINATE_CHARGE_ ALARM, and FULLY_CHARGED bits in BatteryStatus(). The bq2060 clears the OVER_ CHARGED_ALARM and TERMINATE_CHARGE_ ALARM when it detects that the battery is no longer being charged. The FULLY_CHARGED bit remains set and the bq2060 continues to broadcast zero charging current until RelativeStateOfCharge() is less than *Fully Charged Clear*% programmed in EE 0x4c.The counter used to track overcharge capacity is reset with 2mAh of discharge.
- **Under-Temperature**: An under-temperature condition exists if Temperature() < 0°C. On detecting an under-temperature condition, the bq2060 sets ChargingCurrent() to zero. The bq2060 sets ChargingCurrent() to the appropriate pre-charge rate or fast-charge rate when Temperature() ≥ 0°C.

Primary Charge Termination

The bq2060 terminates charge if it detects a charge-termination condition. A charge-termination condition includes the following.

- **ΔT/Δt**: For ΔT/Δt, the bq2060 detects a change in temperature over many seconds. The ΔT/Δt setting is programmable in both the temperature step, *DeltaT* (1.6°C – 4.6°C), and the time step, *DeltaT Time* (20 s–320 s). Typical settings for 1°C/minute include 2°C/120 s and 3°C/180 s. Longer times are required for increased slope resolution. The *DeltaT* value is programmed in EE 0x45 (least significant nibble) and the *Delta T Time* in EE 0x4e.

  In addition to the ΔT/Δt timer, a holdoff timer starts when the battery is being charged at more than 255 mA and the temperature is above 25°C. Until this timer expires, ΔT/Δt detection is suspended. If Current() drops below 256 mA or Temperature() below 25°C, the hold-off timer resets and restarts only when the current and temperature conditions are met again. The holdoff timer is programmable (20 s–320 s) with *Holdoff Time* value in EE 0x4f.
- **Current Taper**: For current taper, ChargingVoltage() must be set to the pack voltage desired during the constant-voltage phase of charging. The bq2060 detects a current taper termination when the pack voltage is greater than the voltage determined by *Current Taper Qual Voltage* in EE 0x4f and the charging current is below a threshold determined by *Current Taper Threshold* in EE 0x4e, for at least 40 s. The bq2060 uses the VFC to measure current for current taper termination. The current polarity must remain positive as measured by the VFC during this time.

Once the bq2060 detects a primary charge termination, the bq2060 sets the TERMINATE_CHARGE_ALARM and FULLY_CHARGED bits in BatteryStatus(), and sets the ChargingCurrent() to the maintenance charge rate as programmed in *Maintenance Charging Current* EE 0x1c–0x1d. On termination, the bq2060 also sets RM to a programmed percentage of FCC, provided that RelativeStateOfCharge() is below the desired percentage of FCC and the CSYNC bit in *Pack Configuration* EE 0x3f is set. If the CSYNC bit is not set and RelativeStateOfCharge() is less than the programmed percentage of FCC, the bq2060 clears the FULLY_CHARGED bit in BatteryStatus(). The programmed percentage of FCC, *Fast Charge Termination* %, is set in EE 0x4b. The

bq2060 clears the FULLY_CHARGED bit when RelativeStateOfCharge() is less than the programmed *Fully Charged Clear* %. The bq2060 broadcasts the fast-charge rate when the FULLY_CHARGED bit is cleared and voltage and temperature permit. The bq2060 clears the TERMINATE_CHARGE_ALARM when it no longer detects that the battery is being charged or it no longer detects the termination condition. See Table 6 for a summary of BatteryStatus() alarm and status bit operation.

Display Port

General

The display port drives a 4- or 5-LED, bar-graph display. The display is activated by a logic signal on the $\overline{\text{DISP}}$ input. The bq2060 can display RM in either a relative or absolute mode with each LED representing a percentage of the full-battery reference. In relative mode, the bq2060 uses FCC as the full-battery reference; in absolute mode, it uses DC.

The DMODE bit in *Pack Configuration* programs bq2060 for the absolute or relative display mode. The LED bit in *Control Mode* programs the 4-or 5-LED option. A 5th LED can be used with the 4-LED display option to show when the battery capacity is ≥ to 100%.

Activation

The display may be activated at any time by a high-to-low transition on the $\overline{\text{DISP}}$ input. This is usually accomplished with a pullup resistor and a pushbutton switch. Detection of the transition activates the display and starts a 4-s display timer. The timer expires and turns off the display whether $\overline{\text{DISP}}$ was brought low momentarily or held low indefinitely. Reactivation of the display requires that the $\overline{\text{DISP}}$ input return to a logic-high state and then transition low again. The second high-to-low transition must occur after the display timer expires. The bq2060 requires the $\overline{\text{DISP}}$ input to remain stable for a minimum of 250ms to detect the logic state.

If the EDV0 bit is set, the bq2060 disables the LED display. The display is also disabled during a VFC calibration and should be turned off before entering the low-power storage mode.

Display Modes

In relative mode, each LED output represents 20% or 25% of the RelativeStateOfCharge() value. In absolute mode, each LED output represents 20% or 25% of the AbsoluteStateOfCharge() value. Table 7 shows the display operation.

In either mode, the bq2060 blinks the LED display if RemainingCapacity() is less than Remaining CapacityAlarm(). The display is disabled if EDV0 = 1.

Secondary Protection for Li-Ion

Undervoltage and overvoltage thresholds may be programmed in the byte value *Cell Under/Over Voltage* EE 0x4a to set a secondary level of protection for Lithium ion cells. The bq2060 checks individual cell voltages for undervoltage and overvoltage conditions. The bq2060 displays the results in the Pack Status register and controls the state of the FET control outputs CFC and DFC. any cell voltage is less than the V_{UV} threshold, the bq2060 sets the CVUV bit in Pack Status and pulls the DFC pin to a logic low. If any cell voltage is greater than the V_{OV} threshold, the bq2060 sets the CVOV bit in Pack Status and pulls the CFC pin to a logic low.

Low-Power Storage Mode

The bq2060 enters low-power mode 5 to 8 s after receiving the Enable Low-Power command. In this mode the bq2060 consumes less than 10 µA. A rising edge on SMBC, SMBD, or HDQ16 restores the bq2060 to the full operating mode. The bq2060 does not perform any gas gauge functions during low-power storage mode.

Device Reset

The bq2060 can be reset with commands over the HDQ16 or SMBus. On reset, the bq2060 initializes its internal registers with the information contained in the configuration EEPROM. The following command sequence initiates a full bq2060 reset:

Write 0x4f to 0xff5a
Write 0x7d to 0x0000
Write 0x7d to 0x0080

Table 6. Alarm and Status Bit Summary(1)

BATTERY STATE	CONDITIONS	CC() STATE AND BatteryStatus BITS SET	CC() = FAST OR PRE-CHARGE CURRENT AND/OR BITS CLEARED
Overcurrent	C() ≥ CC() + *Overcurrent Margin*	CC() = 0, TCA = 1	C() < CC() + *Overcurrent Margin*
Overvoltage	V() ≥ CV() + *Overvoltage Margin* VCELL1, 2, 3, or 4 > *Cell Over Voltage*	TCA = 1	DISCHARGING = 1
		CC() = 0, CVOV = 1	V() < CV() + *Overvoltage Margin* Li-ion cell voltage ≤*Cell Over Voltage*
Over temperature	T() ≥*Max T*	CC() = 0, OTA= 1, TCA = 1, CVOV = 1	T() ≤*Max T* - 5°C or T() ≤ 43°C
Overcharge	Capacity added after RM() = FCC() ≥ *Maximum Overcharge*	CC() = 0, FC = 1	RSOC() < *Fully Charged Cleared %*
		OCA = 1, TCA = 1	DISCHARGING = 1
Under temperature	T() < 0°C	CC() = 0	0°C ≤ T() < 5°C, CC() = *Pre-Charge Current* T() ≥ 5°C, CC() = *Fast-Charging Current*
Fast charge termination	ΔT/Δt or Current Taper	CC() = Maintenance Charging Current, FC = 1	RSOC() < *Fully Charged Cleared %*
		TCA = 1	DISCHARGING = 1 or termination condition is no longer valid.
Fully discharged	V() ≤ EDV2	FD = 1	RSOC() > 20%
Overdischarged	V() ≤ EDV0	TDA = 1	V() > EDV0
	VCELL1, 2, 3 or 4 < *Cell Under Voltage*	TDA = 1, CVUV = 1	VCELL1, 2, 3, or 4 ≥*Cell Under Voltage*
Low capacity	RM() < RCA()	RCA = 1	RM() ≥ RCA()
Low run-time	ATTE() < RTA()	RTA = 1	ATTE() ≥ RTA()

(1) C() = Current(), CV() = ChargingVoltage(), CC() = ChargingCurrent(), V() = Voltage(), T() = Temperature(), TCA = TERMINATE_CHARGE_ALARM, OTA = OVER_TEMPERATURE_ALARM, OCA = OVER_CHARGED_ALARM, TDA = TERMINATE_DISCHARGE_ALARM, FC = FULLY_CHARGED, FD = FULLY_DISCHARGED, RSOC() = RelativeStateOfCharge(). RM() = RemainingCapacity(), RCA = REMAINING_CAPACITY_ALARM, RTA = REMAINING_TIME_ALARM, ATTE() = AverageTimeToEmpty(), RTA() = RemainingTimeAlarm(), RCA() = RemainingCapacityAlarm(), FCC() = FullChargeCapacity.

Table 7. DISPLAY MODE (5 LED)

CONDITION RELATIVE OR ABSOLUTE STATEOFCHARGE ()	5 LED DISPLAY OPTION				
	LED1	LED2	LED3	LED4	LED5
EDV0 = 1	OFF	OFF	OFF	OFF	OFF
<20%	ON	OFF	OFF	OFF	OFF
≥20%, <40%	ON	ON	OFF	OFF	OFF
≥40%, <60%	ON	ON	ON	OFF	OFF
≥60%, <80%	ON	ON	ON	ON	OFF
≥80%	ON	ON	ON	ON	ON

Table 8. DISPLAY MODE (4 LED)

CONDITION RELATIVE OR ABSOLUTE STATEOFCHARGE()	4 LED DISPLAY OPTION			
	LED1	LED2	LED3	LED4
EDV0 = 1	OFF	OFF	OFF	OFF
<25%	ON	OFF	OFF	OFF
≥25%, <50%	ON	ON	OFF	OFF
≥50%, <75%	ON	ON	ON	OFF
≥75%	ON	ON	ON	ON

Communication

The bq2060 includes two types of communication ports: SMBus and HDQ16. The SMBus interface is a 2-wire bidirectional protocol using the SMBC (clock) and SMBD (data) pins. The HDQ16 interface is a 1-wire bidirectional protocol using the HDQ16 pin. All three communication lines are isolated from V_{CC} and may be pulled up higher than V_{CC}. Also, the bq2060 does not pull these lines low if V_{CC} to the part is zero. HDQ16 should be pulled down with a 100-kΩ resistor if not used.

The communication ports allow a host controller, an SMBus-compatible device, or other processor to access the memory registers of the bq2060. In this way a system can efficiently monitor and manage the battery.

SMBus

The SMBus interface is a command-based protocol processor acting as the bus master initiates communication to the bq2060 by generating a START condition. The START condition consists of a high-to-low transition of the SMBD line while the SMBC is high. The processor then sends the bq2060 device address of 0001011 (bits 7–1) plus a R/$\overline{W}$ bit (bit 0) followed by an SMBus command code. The R/$\overline{W}$ bit and the command code instruct the bq2060 to either store the forthcoming data to a register specified by the SMBus command code or output the data from the specified register. The processor completes the access with a STOP condition. A STOP condition consists of a low-to-high transition of the SMBD line while the SMBC is high. With the SMBus protocol, the most significant bit of a data byte is transmitted first.

In some instances, the bq2060 acts as the bus master. This occurs when the bq2060 broadcasts charging requirements and alarm conditions to device addresses 0x12 (SBS Smart Charger) and 0x10 (SBS Host Controller.)

SMBus Protocol

The bq2060 supports the following SMBus protocols:

- Read Word
- Write Word
- Read Block

A processor acting as the bus master uses the three protocols to communicate with the bq2060. The bq2060 acting as the bus master uses the WriteWord protocol.

The SMBD and SMBC pins are open drain and require external pullup resistors.

SMBus Packet Error Checking

The bq2060 supports Packet Error Checking as a mechanism to confirm proper communication between it and another SMBus device. Packet Error Checking requires that both the transmitter and receiver calculate a Packet Error Code (PEC) for each communication message. The device that supplies the last byte in the communication message appends the PEC to the message. The receiver compares the transmitted PEC to its PEC result to determine if there is a communication error.

PEC Protocol

The bq2060 can receive or transmit data with or without PEC. Figure 8 shows the communication protocol for the Read Word, Write Word, and Read Block messages without PEC. Figure 9 includes PEC.

In the Write Word protocol, the bq2060 receives the PEC after the last byte of data from the host. If the host does not support PEC, the last byte of data is followed by a STOP condition. After receipt of the PEC, the bq2060 compares the value to its calculation. If the PEC is correct, the bq2060 responds with an ACKNOWLEDGE. If is not correct, the bq2060 responds with a NOT ACKNOWLEDGE and sets an error code.

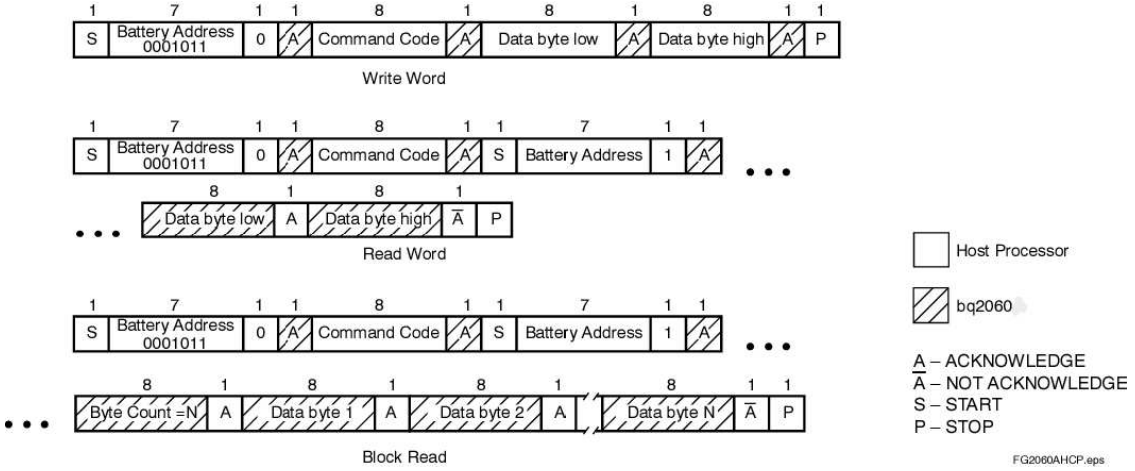

Figure 8. SMBus Communication Protocol Without PEC

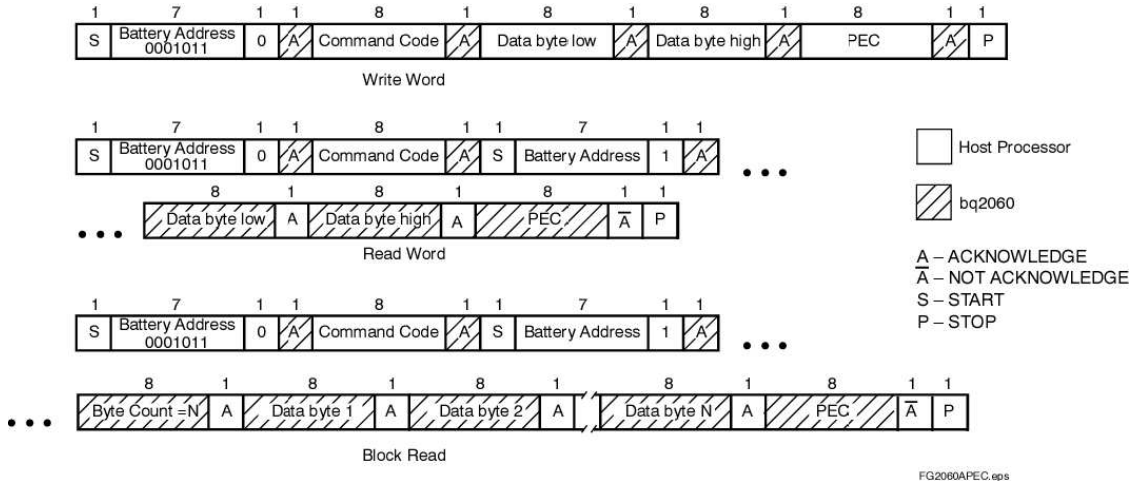

Figure 9. SMBus Communication Protocol With PEC

In the Read Word and Block Read, the host generates an ACKNOWLEDGE after the last byte of data is sent by the bq2060. The bq2060 then sends the PEC and the host acting as a master-receiver generates a NOT ACKNOWLEDGE and a STOP condition.

PEC Calculation

The basis of the PEC calculation is an 8-bit cyclic redundancy check (CRC-8) based on the polynomial $C(X) = X^8 + X^2 + X^1 + 1$. The PEC calculation includes all bytes in the transmission, including address, command, and data. The PEC calculation does not include ACKNOWLEDGE, NOT ACKNOWLEDGE, START, STOP, and repeated START bits.

For example, the host requests RemainingCapacity() from the bq2060. This includes the host following the Read Word protocol. The bq2060 calculates the PEC based on the following 5 bytes of data, assuming that the remaining capacity of the battery is 1001 mAh.

- Battery Address with R/$\overline{W}$ = 0: 0x16
- Command Code for RemainingCapacity(): 0x0f

- Battery Address with R/$\overline{W}$ = 1: 0x17
- RemainingCapacity(): 0x03e9

For 0x160f17e903, the bq2060 transmits a PEC of 0xe8 to the host.

PEC Enable in Master Mode

PEC for master mode broadcasts to the charger, host, or both can be enabled/disabled with the combination the bits HPE and CPE in *Control Mode*.

SMBus On and Off State

The bq2060 detects whether the SMBus enters the Off state by monitoring the SMBC and SMBD lines. When both signals are continually low for at least 2.5 s, the bq2060 detects the Off state. When the SMBC and SMBD lines go high, the bq2060 detects the On state and can begin communication within 1 ms. One-MΩ pulldown resistors on SMBC and SMBD are recommended for reliable Off tate detection.

HDQ16

The HDQ16 interface is a command-based protocol. (See Figure 10.) A processor sends the command code to the bq2060. The 8-bit command code consists of two fields, the 7-bit HDQ16 command code (bits 0–6) and the 1-bit R/W field. The R/W field directs the bq2060 either to

- Store the next 16 bits of data to a specified register or
- Output 16 bits of data from the specified register

With HDQ16, the least significant bit of a data byte (command) or word (data) is transmitted first.

A bit transmission consists of three distinct sections. The first section starts the transmission by either the host or the bq2060 taking the HDQ16 pin to a logic-low state for a period $t_{STRH;B}$. The next section is the actual data transmission, where the data bit is valid by the time, $t_{DSU;B}$ after the negative edge used to start communication. The data bit is held for a period $t_{DH;DV}$ to allow the host processor or bq2060 to sample the data bit.

The final section is used to stop the transmission by returning the HDQ16 pin to a logic-high state by at least the time $t_{SSU;B}$ after the negative edge used to start communication. The final logic-high state should be until a period $t_{CYCH;B}$ to allow time to ensure that the bit transmission was stopped properly.

If a communication error occurs (e.g., t_{CYCB} > 250µs), the host sends the bq2060 a BREAK to reinitiate the serial interface. The bq2060 detects a BREAK when the HDQ16 pin is in a logic-low state for a time t_B or greater. The HDQ16 pin is then returned to its normal ready-high logic state for a time t_{BR}. The bq2060 is then ready to receive a command from the host processor.

The HDQ16 pin is open drain and requires an external pullup resistor.

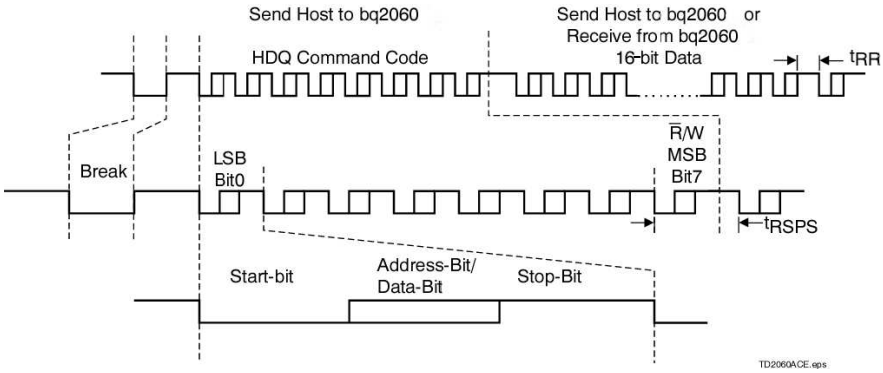

Figure 10. HDQ16 Communication Example

Command Codes

The SMBus Command Codes are in (), the HDQ16 in [ ]. Temperature(), Voltage(), Current(), and AverageCurrent(), performance specifications are at regulated V_{CC} (V_{RO}) and a temperature of 0°C–70°C.

ManufacturerAccess() (0x00); [0x00–0x01]

DESCRIPTION

This function provides writable command codes to control the bq2060 during normal operation and pack manufacture. These commands can be ignored if sent within one second after a device reset. The following list of commands are available.

0x0618 ENABLE LOW-POWER STORAGE MODE: Activates the low-power storage mode. The bq2060 enters the storage mode after a 5- to 8-s delay. The bq2060 accepts other commands to ManufacturerAccess() during the delay before entering low-power storage mode. The LEDs must be off before entering the low-power storage mode as the display state remains unchanged. During the delay following the low-power storage command, a VFC Calibration command may be issued.

The bq2060 clears the ManufacturerAccess() command within 900 ms of acknowledging the Enable Low-Power Storage command. The VFC Calibration command must be sent 900–1600 ms after SMBus acknowledgment of the Enable Low-Power Storage command. In this case, the bq2060 delays entering storage mode until the calibration process completes and the bq2060 stores the new calibration values in EEPROM.

0x062b SEAL COMMAND: Instructs the bq2060 to restrict access to those functions listed in Table 3.

NOTE:

The SEAL Command does not change the state of the SEAL bit in *Pack Configuration* in EEPROM. The bq2060 completes the seal function and clears ManufacturerAccess() within 900 ms of acknowledging the command.

0x064d CHARGE SYNCHRONIZATION: Instructs the bq2060 to update RM to a percentage of FCC as defined in *Fast Charge Termination* %. The bq2060 updates RM and clears ManufacturerAccess() within 900 ms of acknowledging the command.

0x0653 ENABLE VFC CALIBRATION: Instructs the unsealed bq2060 to begin VFC calibration. With this command, the bq2060 deselects the SR_1 and SR_2 inputs and calibrates for IC offset only. It is best to avoid charge or discharge currents through the sense resistor during this calibration process.

0x067e ALTERNATE VFC CALIBRATION: Instructs the unsealed bq2060 to begin VFC calibration. With this command, the bq2060 does not deselect the SR_1 and SR_2 inputs and calibrates for IC and PCB offset. **During this procedure no charge or discharge currents occur.**

During VFC calibration, the bq2060 disables the LED display and accepts only the Stop VFC Calibration and the SEAL Command to ManufacturerAccess(). The bq2060 disregards all other commands. SMBus communication should be kept to a minimum during VFC calibration to reduce the noise level and allow a more accurate calibration.

Once started, the VFC calibration procedure completes automatically. When complete, the bq2060 saves the calibration values in EEPROM. The calibration normally takes about 8 to 10 minutes. The calibration time is inversely proportional to the bq2060 VFC (and PCB) offset error. The bq2060 caps the calibration time at one hour in the event of calibrating a zero-offset error. The VFC calibration can be done as the last step in a battery pack test procedure because the calibration can complete automatically after removal from a test setup.

The bq2060 clears ManufacturerAccess() within 900 ms and starts calibration within 3.2 s of acknowledging the command.

0X0660 STOP VFC CALIBRATION: Instructs the bq2060 to abort a VFC calibration procedure. If aborted, the bq2060 disables offset correction. The bq2060 stops calibration within 20 ms of acknowledging the command.

0X0606 PROGRAM EEPROM: Instructs the unsealed bq2060 to connect the SMBus to the EEPROM I^2C bus. The bq2060 applies power to the EEPROM within 900 ms of acknowledging the command. After issuing the program EEPROM command, the bq2060 monitoring functions are disabled until the I^2C bus is disconnected. The bq2060 disconnects the I^2C bus when it detects that the Battery Address 0x16 is sent over the SMBus. The Battery Address 0x16 to disconnect the I^2C bus should not be sent until 10 ms after the last write to the EEPROM.

Example: The following sequence of actions is an example of how to use the ManufacturerAccess() commands in an efficient manner to take a battery pack that has completed all testing and calibration except for VFC calibration and to make it ready for shipment in the SEALED state and in low-power storage mode:

1. Complete testing and calibration with desired final values stored in EEPROM. This process includes setting the SEAL bit in *Pack Configuration*. Sending a reset command to the bq2060 during test ensures that RAM values correspond to the final EEPROM values
2. If the initial value of RemainingCapacity() must be non-zero, the desired value may be written to Command 0x26 with the pack unsealed. A reset sent after this step resets RM to zero.
3. Issue the Enable Low-Power Storage Mode command.
4. Within 900–1600 ms after sending the Enable Low-Power command, issue the Enable VFC Calibration command. This delays the low-power storage mode until after VFC calibration completion.
5. Issue the SEAL Command subsequent to the VFC Calibration command. The bq2060 must receive the SEAL Command before VFC calibration completes. The bq2060 resets the OCE bit in Pack Status when calibration begins and sets the bit when calibration successfully completes.

After VFC calibration completes automatically, the bq2060 saves the VFC offset cancellation values in EEPROM and enters the low-power storage mode in about 20 s. In addition, the bq2060 is sealed, allowing access as defined in Table 3 only.

PURPOSE

The ManufacturerAccess() function provides the system host access to bq2060 functions that are not defined by the SBD.

SMBUS PROTOCOL Read or Write Word

INPUT/OUTPUT: Word

RemainingCapacityAlarm() (0x01); [0x01]

DESCRIPTION

Sets or gets the low-capacity threshold value. Whenever the RemainingCapacity() falls below the low-capacity value, the bq2060 sends AlarmWarning() messages the SMBus Host with the REMAINING_CAPACITY_ ALARM bit set. A low-capacity value of 0 disables this alarm. The bq2060 initially sets the low-capacity value to *Remaining Capacity Alarm* value programmed in EE 0x04 - 0x05. The low-capacity value remains unchanged until altered by the Remaining-CapacityAlarm() function. The low-capacity value may be expressed in either current (mA) or power (10 mWh) depending on the setting of the BatteryMode()'s CAPACITY_ MODE bit.

PURPOSE

The RemainingCapacityAlarm() function can be used by systems that know how much power they require to save their operating state. It enables those systems to more finely control the point at which they transition into suspend or hibernate state. The low-capacity value can read to verify the value in use by the bq2060's low capacity alarm.

SMBus PROTOCOL Read or Write Word

INPUT/OUTPUT Unsigned integer—value below which Low Capacity messages are sent.

BATTERY MODES		
	CAPACITY_MODE bit = 0	CAPACITY_MODE bit = 1
Units	mAh @ C/5	10 mWh @ P/5
Range	0–65,535 mAh	0–65,535 10 mWh
Granularity	Not applicable	
Accuracy	See RemainingCapacity()	

RemainingTimeAlarm() (0x02); [0x02]

DESCRIPTION

Sets or gets the remaining time alarm value. Whenever the AverageTimeToEmpty() falls below the remaining time value, the bq2060 sends AlarmWarning() messages to the SMBus Host with the *REMAINING_TIME_ALARM* bit set. A remaining time value of 0 effectively disables this alarm. The bq2060 initially sets the remaining time value to the *Remaining Time Alarm* value programmed in EE 0x02 - 0x03. The remaining time value remains unchanged until altered by the RemainingTimeAlarm() function.

PURPOSE

The RemainingTimeAlarm() function can be used by systems that want to adjust when the remaining time alarm warning is sent. The remaining time value can be read to verify the value in use by the bq2060' RemainingTimeAlarm().

SMBus PROTOCOL Read or Write Word

INPUT/OUTPUT:

Unsigned integer—the point below which remaining time messages are sent.

Units: minutes

Range: 0 to 65,535 minutes

Granularity: Not applicable

Accuracy: see AverageTimeToEmpty()

BatteryMode() (0x03); [0x03]

DESCRIPTION This function selects the various battery operational modes and reports the battery's mode and requests.

Defined modes include

- Whether the battery's capacity information is specified in mAh or 10 mWh (CAPACITY_MODE bit)
- Whether the ChargingCurrent() and ChargingVoltage() values are broadcast to the Smart Battery Charger when the bq2060 detects that the battery requires charging (CHARGER_MODE bit)
- Whether all broadcasts to the Smart Battery Charger and Host are disabled

The defined request condition is the battery requesting conditioning cycle (RELEARN_FLAG).

PURPOSE

The CAPACITY_MODE bit allows power management systems to best match their electrical characteristics with those reported by the battery. For example, a switching power supply represents a constant power load, whereas a linear supply is better represented by a constant current model. The CHARGER_MODE bit allows a SMBus Host or Smart Battery Charger to override the Smart Battery's desired charging parameters disabling the bq2060's broadcasts. The RELEARN_ FLAG bit allows the bq2060 to request a conditioning cycle.

SMBus PROTOCOL Read orWriteWord

INPUT/OUTPUT

Unsigned integer —bit mapped— see below.

Units: not applicable

Range: 0–1

Granularity: not applicable

Accuracy: not applicable

The BatteryMode() word is divided into two halves, the most significant bit (bits 8–15) which is read/write and the least significant bit (bits 0–7) which is read only. The bq2060 forces bits 0–6 to zero and prohibits writes to bit 7.

Table 9 summarizes the meanings of the individual bits in the BatteryMode() word and specifies the default values, where applicable, are noted.

Table 9. Battery Mode Bits and Values

BATTERY MODE() BITS	BITS USED	FORMAT	ALLOWABLE VALUES
INTERNAL_CHARGE_CONTROLLER	0	Read only bit flag	
PRIMARY_BATTERY_SUPPORT	1	Read only bit flag	
Reserved	2–6		
RELEARN_FLAG	7	Read only bit flag	0—Battery OK 1—Relearn cycle requested
CHARGE_CONTROLLER_ENABLED	8	R/W bit flag	
PRIMARY_BATTERY	9	R/W bit flag	
Reserved	10–12		
ALARM_MODE	13	R/W bit flag	0—Enable alarm broadcast (default) 1—Disable alarm broadcast
CHARGER_MODE	14	R/W bit flag	0—Enable charging broadcast (default) 1—Disable charging broadcast
CAPACITY_MODE	15	R/W bit flag	0—Report in mA or mAh (default) 1—Report in 10mW or 10mWh

INTERNAL_CHARGE_CONTROLLER bit is not used by the bq2060.

PRIMARY_BATTERY_SUPPORT bit is not used by the bq2060.

RELEARN_FLAG bit set indicates that the bq2060 is requesting a capacity relearn cycle for the battery. The bq2060 sets the RELEARN_FLAG on a full reset and it detects 20 cycle counts without an FCC update. The bq2060 clears this flag after a learning cycle has been completed.

CHARGE_CONTROLLER_ENABLED bit is not used by the bq2060. The bq2060 forces this bit to zero.

PRIMARY_BATTERY bit is not used by the bq2060. The bq2060 forces this bit to zero.

ALARM_MODE bit is set to disable the bq2060's ability to master the SMBus and send AlarmWarning() messages to the SMBus Host and the Smart Battery Charger. When set, the bq2060 does *not* master the SMBus, and AlarmWarning() messages are *no*t sent to the SMBus Host and the Smart Battery Charger **for a period of no more than 65 s and no less than 45 s**. When cleared (default), the Smart Battery sends the AlarmWarning() messages to the SMBus Host and the Smart Battery Charger any time an alarm condition is detected.

- The bq2060 polls the ALARM_MODE bit at least every 150 ms. Whenever the ALARM_MODE bit is set, the bq2060 resets the bit and starts or restarts a 55 s (nominal) timer. After the timer expires, the bq2060 automatically enables alarm broadcasts to ensure that the accidental deactivation of broadcasts does not persist. To prevent the bq2060 from becoming a master on the SMBus, an SMBus host must therefore continually set this bit at least once per 50s to keep the bq2060 from broadcasting alarms.
- The ALARM_MODE bit defaults to a cleared state within 130 ms after the bq2060 detects the SMBus Off-State.
- The condition of the ALARM-MODE bit does NOT affect the operation or state of the CHARGER_MODE bit which is used to prevent broadcasts ChargingCurrent() and ChargingVoltage() to the Smart Battery Charger.

CHARGER_MODE bit enables or disables the bq2060's transmission of ChargingCurrent() and ChargingVoltage() messages to the Smart Battery Charger. When set, the bq2060 does NOT transmit ChargingCurrent() and ChargingVoltage() values to the Smart Battery Charger. When cleared, the bq2060 transmits the ChargingCurrent() and ChargingVoltage() values to the Smart Battery Charger. The CHARGER_MODE bit defaults to a cleared state within 130 ms after the bq2060 detects the SMBus Off state.

CAPACITY_MODE bit indicates if capacity information is reported in mA/mAh or 10 mW/10 mWh. When set, the bq2060 reports capacity information in 10mW/10mWh as appropriate. When cleared, the bq2060 reports capacity information in mA/mAh as appropriate. The CAPACITY_MODE bit defaults to a cleared state within 130 ms after the bq2060 detects the SMBus Off state.

NOTE 1: The following functions are changed to accept or return values in mA/mAh or 10 mW/10 mWh depending on the CAPACITY_MODE bit:

- RemainingCapacityAlarm()
- AtRate()
- RemainingCapacity()
- FullChargeCapacity()
- DesignCapacity()

NOTE 2: The following functions are calculated on the basis of capacity and may be calculated differently depending on the CAPACITY_MODE bit:

- AtRateOK()
- AtRateTimeToEmpty()
- AtRateTimeToFull()
- RunTimeToEmpty()
- AverageTimeToEmpty()
- AverageTimeToFull()
- Remaining Time Alarm()
- BatteryStatus()

The bq2060 updates the non-AtRate related register values within 3 s of changing the state of the CAPACITY_MODE bit. The AtRate() values is updated after the next AtRate value is written to the bq2060 (or after the next 20-s scheduled refresh calculation).

AtRate() (0x04); [0x04]

DESCRIPTION

The AtRate() function is the first half of a two-function call-set used to set the AtRate value used in calculations made by the AtRateTimeToFull(), AtRateTime-ToEmpty(), and AtRateOK() functions. The AtRate value may be expressed in either current (mA) or power (10 mWh) depending on the setting of the BatteryMode()'s CAPACITY_MODE bit.

PURPOSE

Because the AtRate() function is the first half of two-function call-set, it is followed by the second function of the call-set that calculates and returns a value based on the AtRate value and the battery's present state. A delay of up to 1.3 s is required after writing AtRate() before the bq2060 can acknowledge the requested AtRate function.

- When the AtRate() value is positive, the AtRate-TimeToFull() function returns the predicted time to full charge at the AtRate value of charge.
- When the AtRate() value is negative, the AtRateTimeToEmpty() function returns the predicted operating time at the AtRate value of discharge.
- When the AtRate() value is negative, the AtRateOK() function returns a Boolean value that predicts the battery's ability to supply the AtRate value of *additional* discharge energy (current or power) for 10 seconds.

The default value for AtRate() is zero. Writing AtRate() values over the HDQ16 serial port does *not* trigger a re-calculation of AtRateTimeToFull(), AtRateTimeToEmpty(), and AtRateOK() functions.

It is recommended that AtRate() requests should be limited to one request every 4 s.

SMBus PROTOCOL Read orWriteWord

INPUT/OUTPUT Signed integer—charge or discharge; the AtRate() value is positive for charge, negative for discharge, and zero for neither (default).

BATTERY MODES		
	CAPACITY_MODE bit = 0	CAPACITY_MODE bit = 1
Units	mA	10 mW
Charge Range	1 to 32,767 mA	1 to 32,768 10 mW
Discharge Range	–1 to –32,768 mA	–1 to –32,768 10 mW
Granularity	1 Unit	
Accuracy	NA	

AtRateTimeToFull() (0x05);[0x05]

DESCRIPTION

Returns the predicted remaining time to fully charge the battery at the AtRate( ) value (mA).

PURPOSE

The AtRateTimeToFull() function is part of two-function call-set used to determine the predicted remaining charge time at the AtRate value in mA. The bq2060 updates AtRateTimeToFull() within 1.3 s after the SMBus Host sets the AtRate value. If read before this delay, the command is No Acknowledged and the error code in BatteryStatus is set to *not ready*. The bq2060 automatically updates AtRateTimeToFull() based on the AtRate() value every 20 s.

SMBus PROTOCOL ReadWord

OUTPUT

Unsigned integer—predicted time in minutes to fully charge the battery.

Units: minutes

Range: 0 to 65,534 min

Granularity: 2 min or better

Accuracy: ±MaxError() *
FullChargeCapacity()/|AtRate()|

Invalid Data Indication: 65,535 indicates the battery is not being charged.

AtRateTimeToEmpty() (0x06); [0x06]

DESCRIPTION

Returns the predicted remaining operating time if the battery is discharged at the AtRate() value.

PURPOSE

The AtRateTimeToEmpty() function is part of a two-function call-set used to determine the remaining operating time at the AtRate()value. The bq2060 updates AtRateTimeToEmpty() within 1.3s after the SMBus Host sets the AtRate() value. If read before this delay, the command is No Acknowledged, and the error code in BatteryStatus is set to *not ready.* The bq2060 automatically updates AtRateTimeToEmpty() based on the AtRate() value every 20s.

SMBus PROTOCOL ReadWord

OUTPUT

Unsigned integer—estimated operating time left.

Units: minutes

Granularity: 2 min or better

Range: 0 to 65,534 min

Accuracy: –0, +MaxError()
FullChargeCapacity/|AtRate()|

Invalid Data Indication: 65,535 indicates the battery is not being charged.

AtRateOK() (0x07); [0x07]

DESCRIPTION

Returns a Boolean value that indicates whether or not the battery can deliver the AtRate( )value of *additional* energy for 10 seconds (Boolean). If the AtRate value is zero or positive, the AtRateOK() function ALWAYS returns true.

PURPOSE

The AtRateOK() function is part of a two-function call-set used by power management systems to determine if the battery can safely supply enough energy for an additional load. The bq2060 updates AtRateOK() within 1.3 s after the SMBus Host sets the AtRate( ) value. If read before this delay, the command is No Acknowledged, and the error code in BatteryStatus is set to *not ready*. The bq2060 automatically updates AtRateOK() based on the At Rate() value every 20 s.

SMBus PROTOCOL ReadWord

OUTPUT

Boolean—indicates if the battery can supply the additional energy requested.

Units: Boolean

Range: TRUE, FALSE

Granularity: not applicable

Accuracy: not applicable

Temperature() (0x08); [0x08]

DESCRIPTION

Returns the temperature (K) measured by the bq2060.

PURPOSE

The Temperature() function provides accurate cell temperatures for use by battery chargers and thermal management systems. A battery charger can use the temperature as a safety check. Thermal management systems may use the temperature because the battery is one of the largest thermal sources in a system.

SMBus PROTOCOL ReadWord

OUTPUT

Unsigned integer—cell temperature in tenth-degree Kelvin increments.

Units: 0.1°K

Range: 0 to +6553.5°K {real range}

Granularity: 0.1°K

Accuracy: ±1.°K (from ideal 103AT thermistor performance, after calibration)

Voltage() (0x09); [0x09]

DESCRIPTION Returns the cell-pack voltage (mV).

PURPOSE

The Voltage() function provides power management systems with an accurate battery terminal voltage. Power management systems can use this voltage, along with battery current information, to characterize devices they control. This ability helps enable intelligent, adaptive power management systems.

SMBus PROTOCOL ReadWord

OUTPUT:

Unsigned integer—battery terminal voltage in mV.

Units: mV

Range: 0 to 20,000 mV

Granularity: 1 mV

Accuracy: ±0.65% (after calibration)

Current() (0x0a); [0x0a]

DESCRIPTION

Returns the current being supplied (or accepted) through the battery's terminals (mA).

PURPOSE

The Current() function provides a snapshot for the power management system of the current flowing into or out of the battery. This information is of particular use in power-management systems because they can characterize individual devices and tune their operation to actual system power behavior.

SMBus PROTOCOL ReadWord

OUTPUT

Signed integer—charge/discharge rate in mA increments—positive for charge, negative for discharge.

Units: mA

Range: (±250 mV/RS) mA

Granularity: 0.038 mV/RS (integer value)

Accuracy: ±1 mV/RS (after calibration)

AverageCurrent() (0x0b); [0x0b]

DESCRIPTION

Returns a value that approximates a 1-minute rolling average of the current being supplied (or accepted) through the battery's terminals (mA). The AverageCurrent() function returns meaningful values during the battery's first minute of operation.

PURPOSE:

The AverageCurrent() function provides the average current flowing into or out of the battery for the power management system.

SMBus PROTOCOL ReadWord

OUTPUT

Signed integer—charge/discharge rate in mA increments—positive for charge, negative for discharge.

Units: mA

Range: (± 250 mV/$R_{S)}$ mA

Granularity: 0.038 mV/R_S (integer value)

Accuracy: ±1m V/R_S (after calibration)

MaxError() (0x0c); [0x0c]

DESCRIPTION

Returns the expected margin of error (%) in the state of charge calculation. For example, when MaxError() returns 10% and RelativeStateOfCharge() returns 50%, the Relative StateOfCharge() is more likely between 50% and 60%. The bq2060 sets MaxError() to 100% on a full reset. The bq2060 sets MaxError() to 2% on completion of a learning cycle, unless the bq2060 limits the learning cycle to the +512/–256 mAh maximum adjustment values. If the learning cycle is limited, the bq2060 sets MaxError() to 8% unless MaxError() was already below 8%. In this case MaxError() does not change. The bq2060 increments MaxError() by 1% after four increments of CycleCount() without a learning cycle.

If voltage-based corrections are applied to the coulomb counter, MaxError() is set to 25%.

PURPOSE

The MaxError() function has real value in two ways: first, to give the user a confidence level about

the state of charge and second, to give the power management system information about how aggressive it should be, particularly as the battery nears the end of its life.

SMBus PROTOCOL ReadWord

OUTPUT

Unsigned integer—percent uncertainty for selected information.

Units: %

Range: 2% to 100%

Granularity: 1%

Accuracy: not applicable

RelativeStateOfCharge() (0x0d); [0x0d]

DESCRIPTION

Returns the predicted remaining battery capacity expressed as a percentage of FullChargeCapacity() (%).

PURPOSE

The RelativeStateOfCharge() function is used to estimate the amount of charge remaining in the battery relative to the last learned capacity.

SMBus PROTOCOL ReadWord

OUTPUT

Unsigned integer—percent of remaining capacity.

Units: %

Granularity: 1%

Range: 0 to 100%

Accuracy: –0, +MaxError()

AbsoluteStateOfCharge()(0x0e); [0x0e]

DESCRIPTION

Returns the predicted remaining battery capacity expressed as a percentage of DesignCapacity() (%). Note that AbsoluteStateOfCharge() can return values greater than 100%.

PURPOSE

The AbsoluteStateOfCharge() function is used to estimate the amount of charge remaining in the battery relative to the nominal or DesignCapacity().

SMBUS PROTOCOL ReadWord

OUTPUT

Unsigned integer—percent of remaining capacity.

Units: %

Range: 0% to 100+%

Granularity: 1%

Accuracy: –0, +MaxError()

RemainingCapacity() (0x0f); [0x0f]

DESCRIPTION

Returns the predicted charge or energy remaining in the battery. The RemainingCapacity() value is expressed in either charge (mAh at a C/5 discharge rate) or energy 10 mWh at a P/5 discharge rate) depending on the setting of the BatteryMode()'s CAPACITY_MODE bit.

PURPOSE

The RemainingCapacity() function returns the battery's remaining capacity. This information is a

numeric indication of remaining charge or energy given by the Absolute or Relative StateOfCharge() functions and may be in a better form for use by power management systems.

SMBus PROTOCOL ReadWord

OUTPUT Unsigned integer—remaining charge in mAh or 10mWh.

BATTERY MODES		
	CAPACITY_MODE bit = 0	CAPACITY_MODE bit = 1
Units	mAh	10 mWh
Range	0 to 65,535 mAh	0 to 65,535 10 mWh
Granularity	mAh	10 mWh
Accuracy	–0, +MaxError() * FullChargeCapacity()	

FullChargeCapacity() (0x10); [0x10]

DESCRIPTION

Returns the predicted pack capacity when it is fully charged. The FullChargeCapacity() value is expressed in either current (mAh at a C/5 discharge rate) or power 10 mWh at a P/5 discharge rate) depending on the setting of the BatteryMode()'s CAPACITY_MODE bit.

PURPOSE

The FullChargeCapacity() function provides the user with a means of understanding the tank size of their battery. This information, along with information about the original capacity of the battery, can be presented to the user as an indication of battery wear.

SMBus PROTOCOL ReadWord

OUTPUT Unsigned integer—estimated full-charge capacity in mAh or 10mWh.

BATTERY MODES		
	CAPACITY_MODE bit = 0	CAPACITY_MODE bit = 1
Units	mAh	10 mWh
Range	0 to 65,535 mAh	0 to 65,535 10 mWh
Granularity	mAh	10 mWh
Accuracy	–0, +MaxError() * FullChargeCapacity()	

RunTimeToEmpty() (0x11); [0x11]

DESCRIPTION

Returns the predicted remaining battery life at the present rate of discharge (minutes). The RunTimeToEmpty() value is calculated based on either current or power depending on the setting of the BatteryMode()'s CAPACITY_ MODE bit.

PURPOSE

The RunTimeToEmpty() provides the power management system with information about the relative gain or loss in remaining battery life in response to a change in power policy. This information is NOT the same as the AverageTimeToEmpty(), which is not suitable to determine the effects that result from a change in power policy.

SMBus PROTOCOL ReadWord

OUTPUT

Unsigned integer—minutes of operation left.

Units: minutes

Range: 0 to 65,534 min

Granularity: 2 min or better

Accuracy: –0, +MaxError() x FullChargeCapacity() / Current()

Invalid Data Indication: 65,535 indicates battery is not being discharged.

AverageTimeToEmpty() (0x12); [0x12]

DESCRIPTION

Returns a 1-minute rolling average of the predicted remaining battery life (minutes). The AverageTimeToEmpty() value is calculated based on either current or power depending on the setting of the BatteryMode()'s CAPACITY_MODE bit.

PURPOSE

The AverageTimeToEmpty() displays state-of-charge information in a more useful way. It averages the instantaneous estimations so that the remaining time does not appear to jump around.

SMBus PROTOCOL ReadWord

OUTPUT

Unsigned integer—minutes of operation left.

Units: minutes

Range: 0 to 65,534 min

Granularity: 2 min or better

Accuracy: –0, +MaxError() x FullChargeCapacity() / AverageCurrent()

Invalid Data Indication: 65,535 indicates battery is not being discharged.

AverageTimeToFull() (0x13); [0x13]

DESCRIPTION

Returns a 1-minute rolling average of the predicted remaining time until the battery reaches full charge (minutes).

PURPOSE

The AverageTimeToFull() function can be used by the SMBus Host's power management system to aid in its policy. It may also be used to find out how long the system must be left on to achieve full charge.

SMBus PROTOCOL ReadWord

OUTPUT

Unsigned integer —remaining time in minutes.

Units: minutes

Range: 0 to 65,534 min

Granularity: 2 min or better

Accuracy: MaxError() x FullChargeCapacity() / AverageCurrent()

Invalid Data Indication: 65,535 indicates the battery is not being charged.

ChargingCurrent() (0x14); [0x14]

DESCRIPTION

Returns the desired charging rate in mA.

PURPOSE

The ChargingCurrent() function sets the maximum charge current of the battery. The ChargingCurrent() value should be used in combination with the ChargingVoltage() value to set the charger's operating point. Together, these functions permit the bq2060 to dynamically control the charging profile (current/ voltage) of the battery. The bq2060 can effectively turn off a charger by returning a value of 0 for this function. The charger may be operated as a constant-voltage source above its maximum regulated current range by returning a ChargingCurrent() value of 65,535.

SMBus PROTOCOL ReadWord

OUTPUT

Unsigned integer—maximum charger output current in mA.

Units: mA

Range: 0 to 65,535 mA

Granularity: 1 mA

Accuracy: not applicable

Invalid Data Indication: 65,535 indicates that a charger should operate as a voltage source outside its maximum regulated current range.

ChargingVoltage() (0x15); [0x15]

DESCRIPTION

Returns the desired charging voltage in mV.

PURPOSE

The ChargingVoltage() function sets the maximum charge voltage of the battery. The ChargingVoltage() value should be used in combination with the ChargingCurrent() value to set the charger's operating point. Together, these functions permit the bq2060 to dynamically control the charging profile (current/ voltage) of the battery. The charger may be operated as a constant-current source above its maximum regulated voltage range by returning a ChargingVoltage() value of 65,535.

SMBus PROTOCOL WriteWord

OUTPUT

Unsigned integer—charger output voltage in mV.

Units: mA

Range: 0 to 65,535 mA

Granularity: 1 mA

Accuracy: not applicable

Invalid Data Indication: 65,535 indicates that a charger should operate as a current source outside its maximum regulated current range.

BatteryStatus()(0x16); [0x16]

DESCRIPTION

Returns the bq2060's status word (flags). Some of the BatteryStatus() flags (REMAINING_CAPACITY_ ALARM and REMAINING_TIME_ALARM) are calculated based on either current or power depending on the setting of the BatteryMode()'s CAPACITY_ MODE bit. This is important because use of the wrong calculation mode may result in an inaccurate alarm.

PURPOSE

The BatteryStatus() function is used by the power management system to get alarm and status bits, as well as error codes from the bq2060. This is basically the same information broadcast to both the SMBus Host and the Smart Battery Charger by the AlarmWarning() function except that the AlarmWarning() function sets the Error Code bits all high before sending the data.

SMBus PROTOCOL ReadWord

OUTPUT:

Unsigned integer—Status Register with alarm conditions bit mapped as follows:

ALARM BITS	
0x8000	OVER_CHARGED_ALARM
0x4000	TERMINATE_CHARGE_ALARM
0x2000	reserved
0x1000	OVER_TEMP_ALARM
0x0800	TERMINATE_DISCHARGE_ALARM
0x0400	reserved
0x0200	REMAINING_CAPACITY_ALARM
0x0100	REMAINING_TIME_ALARM
STATUS BITS	
0x0080	INITIALIZED
0x0040	DISCHARGING
0x0020	FULLY_CHARGED
0x0010	FULLY_DISCHARGED
ERROR CODES	
0x0007	Unknown Error
0x0006	BadSize
0x0005	Overflow/Underflow
0x0004	AccessDenied
0x0003	UnsupportedCommand
0x0002	ReservedCommand
0x0001	Busy
0x0000	OK

Alarm Bits

OVER_CHARGED_ALARM bit is set whenever the bq2060 detects that the battery is being charged beyond the *Maximum Overcharge* limit. This bit is cleared when the bq2060 detects that the battery is no longer being charged (i.e., the bq2060 detects discharge activity or no activity for the digital filter timeout periods. The digital filter timeout period (seconds) equates to 10 times the value shared in *Digital Filter* EE0x52.)

TERMINATE_CHARGE_ALARM bit is set when the bq2060 detects that one or more of the battery's charging parameters are out of range (e.g., its voltage, current, or temperature is too high) or when the bq2060 detects a primary charge termination. This bit is cleared when the parameter falls back into the allowable range, the termination condition ceases, or when the bq2060 detects that the battery is no longer being charged.

OVER_TEMP_ALARM bit is set when the bq2060 detects that the internal battery temperature is greater than or equal to the MaxT limit. This bit is cleared when the internal temperature falls back into the acceptable range.

TERMINATE_DISCHARGE_ALARM bit is set when the bq2060 detects that Voltage() is less than EDV0 or when the CVUV bit in Pack Status is set indicating that a Li-ion cell voltage has dropped below the limit programmed in *Cell Under / Over Voltage*. The bit is cleared when Voltage() is greater than EDV0 or when the CVUV bit is cleared.

REMAINING_CAPACITY_ALARM bit is set when the bq2060 detects that RemainingCapacity() is less than that set by the RemainingCapacityAlarm() function. This bit is cleared when either the value set by the RemainingCapacityAlarm() function is lower than the RemainingCapacity() or when the RemainingCapacity() is increased by charging.

REMAINING_TIME_ALARM bit is set when the bq2060 detects that the estimated remaining time at the present discharge rate is less than that set by the RemainingTimeAlarm() function. This bit is cleared when either the value set by the RemainingTimeAlarm() function is lower than the AverageTimeToEmpty() or when the AverageTimeToEmpty() is increased by charging.

Status Bits

INITIALIZED bit is set when the bq2060 is has detected a valid load of EEPROM. It is cleared when the bq2060 detects an improper EEPROM load.

DISCHARGING bit is set when the bq2060 determines that the battery is not being charged. This bit is cleared when the bq2060 detects that the battery is being charged.

FULLY_CHARGED bit is set when the bq2060 detects a primary charge termination or an overcharged condition. It is cleared when RelativeStateOfCharge() is less than or equal to the programmed *Fully Charged Clear* % in EE 0x4c.

FULLY_DISCHARGED bit is set when Voltage() is less than the EDV2 threshold. This bit is cleared when the Relative StateOfCharge() is greater than or equal to 20%.

ERROR CODES	DESCRIPTION
OK	The bq2060 processed the function code without detecting any errors.
Busy	The bq2060 is unable to process the function code at this time.
Reserved	The bq2060 detected an attempt to read or write to a function code reserved by this version of the specification. The 2060 detected an attempt to access an unsupported optional manufacturer function code.
Unsupported	The bq2060 does not support this function code which is defined in this version of the specification.
AccessDenied	The bq2060 detected an attempt to write to a read-only function code.
Over/Underflow	The bq2060 detected a data overflow or underflow.
BadSize	The bq2060 detected an attempt to write to a function code with an incorrect data block.
UnknownError	The bq2060 detected an unidentifiable error.

CycleCount()(0x17); [0x17]

DESCRIPTION

Returns the number of cycles the battery has experienced. The mAh value of each count is determined by programming the *Cycle Count Threshold* value in EE 0x3c–0x3d. The bq2060 saves the cycle count value to *Cycle Count* EE 0x0e–0x0f after an update to CycleCount().

PURPOSE

The CycleCount() function provides a means to determine the battery's wear. It may be used to give advanced warning that the battery is nearing its end of life.

SMBus PROTOCOL ReadWord

OUTPUT

Unsigned integer—count of total charge removed from the battery over its life.

Units: cycle

Range: 0 to 65,534 cycles 65,535 indicates battery has experienced 65,535 or more cycles.

Granularity: 1 cycle

Accuracy: absolute count

DesignCapacity() (0x18); [0x18]

DESCRIPTION

Returns the theoretical or nominal capacity of a new pack. The DesignCapacity() value is expressed in either current (mAh at a C/5 discharge rate) or power, (10 mWh at a P/5 discharge rate) depending on the setting of the BatteryMode()'s CAPACITY_MODE bit.

PURPOSE

The DesignCapacity() function is used by the SMBus Host's power management with FullChargeCapacity() to determine battery wear. The power management system may present this information to the user and also adjust its power policy as a result.

SMBus PROTOCOL ReadWord

OUTPUT

Unsigned integer—battery capacity in mAh or 10 mWh.

BATTERY MODES		
	CAPACITY_MODE bit = 0	CAPACITY_MODE bit = 1
Units	mAh	10 mWh
Range	0 to 65,535 mAh	0 to 65,535 10 mWh
Granularity	Not applicable	
Accuracy	Not applicable	

DesignVoltage() (0x19); [0x19]

DESCRIPTION

Returns the theoretical voltage of a new pack (mV). The bq2060 sets DesignVoltage() to the value programmed in *Design Voltage* EE 0x12–0x13.

PURPOSE

The DesignVoltage() function can be used to give additional information about a particular Smart Battery's expected terminal voltage.

SMBus PROTOCOL ReadWord

OUTPUT

Unsigned integer—the battery's designed terminal voltage in mV

Units: mV

Range: 0 to 65,535 mV

Granularity: not applicable

Accuracy: not applicable

SpecificationInfo() (0x1a); [0x1a]

DESCRIPTION

Returns the version number of the Smart Battery Specification that the battery pack supports, as well as voltage and current scaling information in a packed unsigned integer. Power scaling is the product of the voltage scaling times the current scaling. The SpecificationInfo is packed in the following fashion: (SpecID_H * 0x10 + SpecID_L) + (VScale + IPScale * 0x10) * 0x100.

The bq2060 VScale (voltage scaling) and IPScale (current scaling) should always be set to zero. The bq2060 sets SpecificationInfo() to the value programmed *Specification Information* EE 0x14–0x15.

PURPOSE

The SpecificationInfo() function is used by the SMBus Host's power management system to determine what information the Smart Battery can provide.

SMBus PROTOCOL ReadWord

OUTPUT

Unsigned integer—packed specification number and scaling information.

FIELD	BITS USED	FORMAT	ALLOWABLE VALUES
SpecID_L	0...3	4-bit binary value	0–15
SpecID_H	4...7	4-bit binary value	0–15
VScale	8...11	4-bit binary value	0 (multiplies voltage by 10^ VScale)
IPScale	12...15	4-bit binary value	0 (multiplies current by 10 ^ IPScale)

ManufactureDate() (0x1b); [0x1b]

DESCRIPTION

This function returns the date the cell pack was manufactured in a packed integer. The date is packed in the following fashion: (year-1980) * 512 + month * 32 + day. The bq2060 sets ManufactureDate() to the value programmed in *Manufacture Date* EE 0x16–0x17.

PURPOSE

The ManufactureDate() provides the system with information that can be used to uniquely identify a particular battery pack when used with SerialNumber().

SMBus PROTOCOL ReadWord

OUTPUT

Unsigned integer—packed date of manufacture.

FIELD	BITS USED	FORMAT	ALLOWABLE VALUES
Day	0...4	5-bit binary value	0–31 (corresponds to date)
Month	5...8	4-bit binary value	1–12 (corresponds to month number)
Year	9...15	7-bit binary value	0–127 (corresponds to year biased by 1980)

SerialNumber() (0x1c); [0x1c]

DESCRIPTION

This function is used to return a serial number. This number, when combined with the ManufacturerName(), the DeviceName(), and the ManufactureDate(), uniquely identifies the battery (unsigned int). The bq2060 sets SerialNumber() to the value programmed in *Serial Number* EE 0x18–0x19.

PURPOSE

The SerialNumber() function can be used to identify a particular battery. This may be important in systems that are powered by multiple batteries where the system can log information about each battery that it encounters.

SMBus PROTOCOL ReadWord

OUTPUT Unsigned integer

ManufacturerName() (0x20); [0x20-0x25]

DESCRIPTION

This function returns a character array containing the battery's manufacturer's name. For example, MyBattCo would identify the Smart Battery's manufacturer as MyBattCo. The bq2060 sets ManufacturerName() to the value programmed in *Manufacturer Name* EE 0x20–0x2a.

PURPOSE

The ManufacturerName() function returns the name of the Smart Battery's manufacturer. The manufacturer's name can be displayed by the SMBus Host's power management system display as both an identifier and as an advertisement for the manufacturer. The name is also useful as part of the information required to uniquely identify a battery.

SMBus PROTOCOL Read Block

OUTPUT

String—character string with maximum length of 11 characters (11+length byte).

DeviceName() (0x21); [0x28-0x2b]

DESCRIPTION

This function returns a character string that contains the battery's name. For example, DeviceName() of BQ2060 would indicate that the battery is a model BQ2060. The bq2060 sets DeviceName() to the value programmed in *Device Name* EE 0x30–0x37.

PURPOSE

The DeviceName() function returns the battery's name for identification purposes.

SMBus PROTOCOL Read Block

OUTPUT

String—character string with maximum length of 7 characters (7+length byte).

DeviceChemistry() (0x22); [0x30-0x32]

DESCRIPTION

This function returns a character string that contains the battery's chemistry. For example, the DeviceChemistry() function returns *NiMH*, the battery pack would contain nickel metal hydride cells. The bq2060 sets DeviceChemistry() to the value programmed in *Device Chemistry* EE 0x40–0x44.

PURPOSE

The DeviceChemistry() function gives cell chemistry information for use by charging systems. The bq2060 does not use DeviceChemisty() values for internal charge control or fuel gauging.

SMBus PROTOCOL Read Block

OUTPUT

Output: String—character string with maximum length of 4 characters (4+length byte).

NOTE:

The following is a partial list of chemistries and their expected abbreviations. These abbreviations are *not* case sensitive.

Lead acid	PbAc
Lithium ion	LION
Nickel cadmium	NiCd
Nickel metal hydride	NiMH
Nickel zinc	NiZn
Rechargeable alkaline-manganese	RAM
Zinc air	ZnAr

ManufacturerData() (0x23); [0x38–0x3a]

DESCRIPTION

This function allows access to the manufacturer data contained in the battery (data). The bq2060 stores seven critical operating parameters in this data area.

PURPOSE

The ManufacturerData() function may be used to access the manufacturer's data area. The data fields of this command reflect the programming of five critical EEPROM locations and can be used to facilitate evaluation bq2060 under various programming sets. The ManufacturerData() function returns the following information in order: *Control Mode, Digital Filter, Self-Discharge Rate, Battery Low %, Near Full*, and the pending EDV threshold voltage (low byte and high byte.)

SMBus PROTOCOL Read Block

Pack Status and Pack Configuration (0x2f); [0x2f]

DESCRIPTION

This function returns the Pack Status and Pack Configuration registers. The Pack Status register contains number of status bits relating to bq2060 operation. The Pack Status register is the least significant byte of the word. The Pack Configuration register is the most significant byte of the word. The byte reflects how the bq2060 is configured as defined by the value programmed in *Pack Configuration* in EE 0x3f.

The Pack Status Register consists of the following bits:

b7	b6	b5	b4	b3	b2	b1	b0
OCE	EDV2	EINT	VDQ	COK	DOK	CVOK	CVUV

OCE

The OCE bit indicates that offset cancellation is enabled. The bq2060 sets this bit after VFC offset calibration is complete.

0	Offset calibration is not enabled
1	Offset calibration is enabled

EDV2

The EDV2 bit indicates that Voltage() is less than the EDV2 threshold.

0	Voltage() > EDV2 threshold (discharging)
1	Voltage() ≤ EDV2 threshold

EINT

The EINT bit indicates that the VFC has detected a charge or discharge pulse.

0	No charge/discharge activity detected
1	Charge/discharge activity detected.

VDQ

The VDQ bit indicates if the present discharge cycle is valid for an FCC update.

0	Discharge cycle is not valid
1	Discharge cycle is valid

COK

The COK bit indicates the status of the CFC pin of the bq2060.

0	CFC pin is low
1	CFC pin is high

DOK

The DOK bit indicates the status of the DFC pin of the bq2060.

0	DFC pin is low
1	DFC pin is high

CVOV

The CVOV bit indicates that a secondary Li-ion protection limit has been exceeded. It is set if any individual cell exceeds the programmed high voltage limit, if the pack voltage exceeds the overvoltage threshold, or if an over-temperature condition occurs. The bit is not latched and merely reflects the present overvoltage status.

0	No secondary protection limits exceeded
1	A secondary protection limit exceeded

CVUV

The CVUV bit indicates if any individual cell falls below the programmed low-voltage limit. The bit applies to lithium batteries only. The bit is not latched and merely reflects the present undervoltage status.

0 All series cells are above the low-voltage limit

1 A series cell is below the low-voltage limit

VCELL4–VCELL1 (0x3c–0x3f); [0x3c–0x3f]

DESCRIPTION

These functions return the calculated voltages in mV at the $VCELL_4$ through $VCELL_1$ inputs.

EEPROM

GENERAL

The bq2060 accesses the external EEPROM during a full reset and when storing historical data. During an EEPROM access, the VOUT pin becomes active and the bq2060 uses the ESCL and ESDA pins to communicate with the EEPROM. The EEPROM stores basic configuration information for use by the bq2060. The EEPROM must be programmed correctly for proper bq2060 operation.

MEMORY MAP

Table 10 shows the memory map for the EEPROM. It also contains example data for a 10 series NiMH and a 3s3p Li-ion battery pack with a 0.05-Ω sense resistor.

Table 10. EEPROM Memory Map

EEPROM ADDRESS		NAME (1)	CHEMISTRY	NIMH EXAMPLE	DATA		Li-ion EXAMPLE	DATA	
					MSB	LSB		MSB	LSB
0x00	0x01	*Check Byte 1*	Li-ion, Nickel	15487	3c	7f	15487	3c	7f
0x02	0x03	*Remaining Time Alarm*	Li-ion, Nickel	10 minutes	00	0a	10 minutes	00	0a
0x04	0x05	*Remaining Capacity Alarm*	Li-ion, Nickel	350 mAh	01	5e	400 mAh	01	90
0x06		*EDV A0 Impedance Age Factor*	Li-ion, Nickel	0	-	00	0	-	00
0x07		Reserved	-	0	-	00	0	-	00
0x08	0x09	Reserved	-	0	00	00	0	00	00
0x0a	0x0b	*Charging Voltage*	Li-ion, Nickel	18000 mV	46	50	12600 mV	31	38
0x0c	0x0d	Reserved	-	128	00	80	128	00	80
0x0e	0x0f	*Cycle Count*	Li-ion, Nickel	0	00	00	0	00	00
0x10	0x11	Reserved	-	0	00	00	0	00	00
0x12	0x13	*Design Voltage*	Li-ion, Nickel	12000 mV	2e	e0	10800 mV	2a	30
0x14	0x15	*Specification Information*	Li-ion, Nickel	v1.1/PEC	00	31	v1.1/PEC	00	31
0x16	0x17	*Manufacture Date*	Li-ion, Nickel	2/25/99=9817	26	59	2/25/99=9817	26	59
0x18	0x19	*Serial Number*	Li-ion, Nickel	1	00	01	1	00	01
0x1a	0x1b	*Fast-Charging Current*	Li-ion, Nickel	4000mA	0f	a0	3000 mA	0b	b8
0x1c	0x1d	*Maintenance Charging Current*	Li-ion, Nickel	200mA	00	c8	0 mA	00	00
0x1e	0x1f	*Pre-Charge Current*	Li-ion, Nickel	800mA	03	20	100 mA	00	64
0x20		*Manufacturer Name Length*	Li-ion, Nickel	9	-	09	9	-	09
0x21		*Character 1*	Li-ion, Nickel	B	-	42	B	-	42
0x22		*Character 2*	Li-ion, Nickel	E	-	45	E	-	45
0x23		*Character 3*	Li-ion, Nickel	N	-	4E	N	-	4e

(1) Reserved locations must be set as shown. Locations marked with an * are calibration values that can be for maximum accuracy. For these locations the table shows the appropriate default or initial setting.

EEPROM (continued)

Table 10. EEPROM Memory Map (continued)

EEPROM ADDRESS		NAME (1)	CHEMISTRY	NIMH EXAMPLE	DATA		Li-ion EXAMPLE	DATA	
					MSB	LSB		MSB	LSB
0x24		*Character 4*	Li-ion, Nickel	C	-	43	C	-	43
0x25		*Character 5*	Li-ion, Nickel	H	-	48	H	-	48
0x26		*Character 6*	Li-ion, Nickel	M	-	4d	M	-	4d
0x27		*Character 7*	Li-ion, Nickel	A	-	41	A	-	41
0x28		*Character 8*	Li-ion, Nickel	R	-	52	R	-	52
0x29		*Character 9*	Li-ion, Nickel	Q	-	51	Q	-	51
0x2a		*Character 10*	Li-ion, Nickel	0	-	00	0	-	00
0x2b		*Light Discharge Current*	Li-ion, Nickel	0	-	00	0	-	00
0x2c	0x2d	Reserved	-	0	00	00	0	00	00
0x2e	0x2f	*Maximum Overcharge*	Li-ion, Nickel	200 mAh	ff	38	256 mAh	ff	00
0x30		*Device Name Length*	Li-ion, Nickel	7	-	07	7	-	07
0x31		*Character 1*	Li-ion, Nickel	B	-	42	B	-	42
0x32		*Character 2*	Li-ion, Nickel	Q	-	51	Q	-	51
0x33		*Character 3*	Li-ion, Nickel	2	-	32	2	-	32
0x34		*Character 4*	Li-ion, Nickel	0	-	30	0	-	30
0x35		*Character 5*	Li-ion, Nickel	6	-	36	6	-	36
0x36		*Character 6*	Li-ion, Nickel	0	-	30	0	-	30
0x37		*Character 7*	Li-ion, Nickel	A	-	41	A	-	41
0x38	0x39	*Last Measured Discharge*	Li-ion, Nickel	4000 mAh	0f	a0	4050 mAh	0f	d2
0x3a	0x3b	*Pack Capacity*	Li-ion, Nickel	4000 mAh	0f	a0	4050 mAh	0f	d2
0x3c	0x3d	*Cycle Count Threshold*	Li-ion, Nickel	500 mAh	fe	0c	3240 mAh	f3	58
0x3e		Reserved	-	0	-	00	0	-	00
0x3f		*Pack Configuration*	Li-ion, Nickel	232	-	e8	246	-	f6
0x40		*Device Chemistry Length*	Li-ion, Nickel	4	-	04	4	-	04
0x41		*Character 1*	Li-ion, Nickel	N	-	4e	L	-	4c
0x42		*Character 2*	Li-ion, Nickel	I	-	49	I	-	49
0x43		*Character 3*	Li-ion, Nickel	M	-	4d	O	-	4f
0x44		*Character 4*	Li-ion, Nickel	H	-	48	N	-	4e
0x45		*MaxT DeltaT*	Li-ion, Nickel	50C,3.0	-	c7	50C, 4.6	-	cf
0x46	0x47	*Overload Current*	Li-ion, Nickel	6000 mA	17	70	6000 mA	17	70
0x48		*Overvoltage Margin*	Li-ion, Nickel	0	-	00	800 mV	-	32
0x49		*Overcurrent Margin*	Li-ion, Nickel	512 mA	-	20	512 mA	-	20
0x4a		Reserved	Nickel	0	-	00	-	-	-
		Cell Under/Over Voltage	Li-ion	-	-	-	118	-	76
0x4b		*Fast Charge Termination %*	Li-ion, Nickel	96%	-	a0	100%	-	9c
0x4c		*Fully Charged Clear %*	Li-ion, Nickel	90%	-	a6	95%	-	a1
0x4d		*Charge Efficiency*	Li-ion, Nickel	97%	-	e1	100%	-	ff
0x4e		*Current Taper Threshold*	Li-ion	-	-	-	200 mA	-	12
		DeltaT Time	Nickel	180 s	-	07	-	-	-
0x4f		*Holdoff Time*	Nickel	240 s	-	04	-	-	-
		Current Taper Qual Voltage	Li-ion	-	-	-	128 mV	-	40
0x50		*Manufacturers Data Length*	Li-ion, Nickel	7	-	07	7	-	07
0x51		*Control Mode*	Li-ion, Nickel	4	-	04	4		04
0x52		*Digital Filter*	Li-ion, Nickel	50 µV	-	2d	50 µV	-	2d
0x53		*Self-Discharge Rate*	Li-ion, Nickel	1%	-	cb	0.21%	-	05

EEPROM (continued)

Table 10. EEPROM Memory Map (continued)

EEPROM ADDRESS		NAME (1)	CHEMISTRY	NIMH EXAMPLE	DATA		Li-ion EXAMPLE	DATA	
					MSB	LSB		MSB	LSB
0x54		*Battery Low %*	Li-ion, Nickel	7%	-	12	7%	-	12
0x55		*Near Full*	Li-ion, Nickel	200 mAh	-	64	200 mAh	-	64
0x56	0x57	Reserved	-	0	-	00	0	-	00
0x58	0x59	Reserved	-	0	-	00	0	-	00
0x5a	0x5b	Reserved	-	0	-	00	0	-	00
0x5c	0x5d	Reserved	-	0	00	00	0	00	00
0x5e	0x5f	*VFC Offset**	Li-ion, Nickel	0	00	00	0	00	00
0x60		*VFC Offset**	Li-ion, Nickel	0	-	00	0	-	00
0x61		*Temperature Offset**	Li-ion, Nickel	0	-	00	0	-	00
0x62		*ADC Offset**	Li-ion, Nickel	0	-	00	0	-	00
0x63		*Cell 2 Calibration Factor**	Li-ion	-	-	-	0	-	00
		Efficiency Temperature Compensation	Nickel	0.25%	-	20	-	-	-
0x64		*Cell 3 Calibration Factor**	Li-ion	-	-	-	0	-	00
		Efficiency Drop Off Percentage	Nickel	96%	-	a0	-	-	-
0x65		*Cell 4 Calibration Factor**	Li-ion	-	-	-	0	-	00
		Efficiency Reduction Rate	Nickel	1%	-	50	-	-	-
0x66	0x67	*ADC Voltage Gain**	Li-ion, Nickel	16 : 1	4e	20	16 : 1	4e	20
0x68	0x69	*ADC Sense Resistor Gain**	Li-ion, Nickel	0.05 Ω	30	d4	0.05 Ω	30	d4
0x6a	0x6b	*VFC Sense Resistor Gain**	Li-ion, Nickel	0.05 Ω	20	00	0.05 Ω	20	00
0x6c	0x6d	*VOC 25%*	Li-ion, Nickel	11500 mV	d3	14	10550 mV	d6	ca
0x6e	0x6f	*VOC 50%*	Li-ion, Nickel	12500 mv	cf	2c	10750 mV	d6	02
0x70	0x71	*VOC 75%*	Li-ion, Nickel	13500 mV	cb	44	11200 mV	d4	40
0x72	0x73	*EDVF/EDV0*	Li-ion, Nickel	9500 mV	25	1c	10265 mV	28	19
0x74	0x75	*EMF/ EDV1*	Li-ion, Nickel	10000 mV	27	10	11550	2d	1e
0x76	0x77	*EDV T0 Factor*	Li-ion, Nickel	0	00	00	4475	11	7b
0x78	0x79	*EDV C1/C0 Factor/EDV2*	Li-ion, Nickel	10500 mV	29	04	C1 = 0 C0 = 235	00	eb
0x7a	0X7b	*EDV R0 Factor*	Li-ion, Nickel	0	00	00	5350	14	e6
0x7c	0x7d	*EDV R1 Factor*	Li-ion, Nickel	0	-	00	250	00	fa
0x7e	0x7f	*Check Byte 2*	Li-ion, Nickel	42330	a5	5a	42330	a5	5a

EEPROM PROGRAMMING

The following sections describe the function of each EEPROM location and how the data is to be stored.

FUNDAMENTAL PARAMETERS

Sense Resistor Value

Two factors are used to scale the current-related measurements. The 16-bit *ADC Sense Resistor Gain* value in EE 0x68–0x69 scales Current() to mA. Adjusting *ADC Sense Resistor Gain* from its nominal value provides a method to calibrate the current readings for system errors and the sense resistor value (RS). The nominal value is set by

EEPROM PROGRAMMING (continued)

$$\text{ADC Sense Resistor Gain} = \frac{625}{(R_S)} \quad (4)$$

The 16-bit VFC *Sense Resistor Gain* in EE 0x6a–0x6b scales each VFC interrupt to mAh. *VFC Sense Resistor Gain* is based on the resistance of the series sense resistor. The following formula computes a nominal or starting value for *VFC Sense Resistor Gain* from the sense resistor value.

$$\text{VFC Sense Resistor Gain} = \frac{409.6}{(R_S)} \quad (5)$$

Sense resistor values are limited to the range of 0.00916 Ω to 0.100 Ω.

Digital Filter

The digital filter threshold, VDF (µV), is set by the value stored in *Digital Filter* EE 0x52.

$$\text{Digital Filter} = \frac{2250}{\text{VDF}} \quad (6)$$

CELL CHARACTERISTICS

Battery Pack Capacity and Voltage

Pack capacity in mAh units is stored in *Pack Capacity* EE 0x3a–0x3b. In mAh mode, the bq2060 copies *Pack Capacity* to DesignCapacity(). In mWh mode, the bq2060 multiplies *Pack Capacity* by *Design Voltage* EE 0x12–0x13 to calculate DesignCapacity() scaled to 10 mWh. *Design Voltage* is stored in mV.

The initial value for *Last Measured Discharge* in mAh is stored in EE 0x38–0x39. *Last Measured Discharge* is modified over the course of pack usage to reflect cell aging under the particular use conditions. The bq2060 updates *Last Measured Discharge* in mAh after a capacity learning cycle. The bq2060 uses the *Last Measured Discharge* value to calculate FullChargeCapacity() in mAh or 10mWh mode.

EDV Thresholds and Near-Full Percentage

The bq2060 uses three pack voltage thresholds to provide voltage-based warnings of low battery capacity. The bq2060 uses the values stored in EEPROM for the EDV0, EDV1, and EDV2 values or calculates the three thresholds from a base value and the temperature, capacity, and rate adjustment factors stored in EEPROM. If EDV compensation is disabled then EDV0, EDV1, and EDV2 are stored directly in mV in EE 0x72–0x73, EE 0x74–0x75, and EE 0x78–0x79, respectively.

For capacity correction at EDV2, *Battery Low* % EE 0x54 can be set at a desired state-of-charge, STATEOFCHARGE%, in the range of 5% to 20%. Typical values for STATEOFCHARGE% are 7%–12% representing 7 –12% capacity.

$$\text{Battery Low \%} = \text{STATEOFCHARGE\%} \times 2.56 \quad (7)$$

The bq2060 updates FCC if a qualified discharge occurs from a near-full threshold to EDV2. The desired near-full threshold window, NFW (mAh), is programmed in *Near Full* in EE 0x55.

$$\text{Near Full} = \frac{\text{NFW}}{2} \quad (8)$$

EDV Discharge Rate and Temperature Compensation

If EDV compensation is enabled, the bq2060 calculates battery voltage to determine EDV0, EDV1, and EDV2 thresholds as a function of battery capacity, temperature, and discharge load. The general equation for EDV0, EDV1, and EDV2 calculation is

$$\text{EDV0,1,2} = \text{EMF} \times F_{BL} - \left| I_{LOAD} \right| \times \text{R0} \times F_{TZ} \times F_{CY} \quad (9)$$

where

- EMF is a no-load battery voltage that is higher than the highest EDV threshold that is computed. EMF is programmed in mV in *EMF/EDV1* EE 0x74–0x75.
- I_{LOAD} is the current discharge load.

EEPROM PROGRAMMING (continued)

F_{BL} is the factor that adjusts the EDV voltage for battery capacity and temperature to match the no-load characteristics of the battery.

$$F_{BL} = f\,(C0, C + C1, T) \tag{10}$$

where

- C (0%, 3%, or *Battery Low* % for EDV0, EDV1, and EDV2, respectively) and C0 are the capacity-related EDV adjustment factors. C0 is programmed in the lower 11 bits of *EDV C0 Factor/EDV2* EE 0x78–79. The *Residual Capacity Factor* is stored in the upper bits of EE 0x78–0x79.

Residual Capacity Factor C1 = RESIDUAL% x 256

RESIDUAL % is the desired battery capacity remaining at EDV0 (RM = 0).

- T is the current temperature in °K

R0 * F_{TZ} represents the resistance of the battery as a function of temperature and capacity.

$$F_{TZ} = f\,(R1, T0, T, C + C1) \tag{11}$$

- R0 is the first order rate dependency factor stored in *EDV R0 Factor* EE 0x7a–0x7b.
- T is the current temperature; C is the battery capacity relating to EDV0, EDV1, and EDV2; and C1 is the desired residual battery capacity remaining at EDV0 (RM = 0).
- R1 adjusts the variation of impedance with battery capacity. R1 is programmed in *EDV R1 Rate Factor* EE 0x7c–0x7d.
- T0 adjusts the variation of impedance with battery temperature. T0 is programmed in *EDV T0 Rate Factor* EE 0x76–0x77.

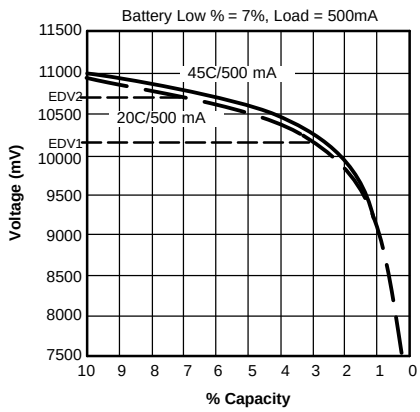

Figure 11. EDV Calculations vs. Capacity for Various Temperatures

F_{CY} is the factor that adjusts for changing cell impedance as the battery pack is cycled:

where

$$F_{CY} = f\,(A0, \text{Cycle Count}()) \tag{12}$$

- A0 is the EDV aging factor that is stored in *EDV A0 Factor* EE 0x06. It should be set to 0 for most applications.

Typical values for the EDV compensation factors for a Li-ion 3s3p 18650 pack are

EMF = 11550
T0 = 4475
C0 = 235
C1 = 0
R0 = 5350
R1 = 250
A0 = 0

EEPROM PROGRAMMING (continued)

The graphs in Figure 11 and Figure 12 show the calculated EDV0, EDV1, and EDV2 thresholds versus capacity using the typical compensation values for different temperatures and loads for a Li-ion 3s3p 18650 pack. The compensation values vary widely for different cell types and manufacturers and must be matched exactly to the unique characteristics for optimal performance.

Overload Current Threshold

The *Overload Current* threshold is a 16-bit value stored in EE 0x46-0x47 in mA units.

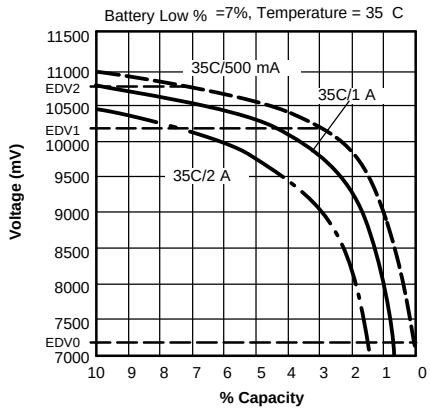

Figure 12. EDV Calculations vs. Capacity for Various Loads

Midrange Capacity Corrections

Three voltage-based thresholds, *VOC25* EE 0x6c–0x6d, *VOC50* EE 0x6e–0x6f, and *VOC75* EE 0x70–0x71, are used to test the accuracy of the RM based on open-circuit pack voltages. These thresholds are stored in the EEPROM in 2s complement of voltage in mV. The values represent the open-circuit battery voltage at which the battery capacity should correspond to the associated state of charge for each threshold.

Self-Discharge Rate

The nominal self-discharge rate, %PERDAY (% per day), is programmed in an 8-bit value *Self-Discharge Rate* EE 0x53 by the following relation:

$$\text{Self} - \text{Discharge Rate} = 256 - \left(\frac{52.73}{\%\text{PERDAY}}\right) \tag{13}$$

Light Load Current

The amount of light load current in mA, ILEAK, used for compensation is stored in *Light Discharge Current* in EE 0x2b as follows:

$$\text{Light Discharge Rate} = \frac{\text{ILEAK} \times 1024}{45} \tag{14}$$

ILEAK is between 0.044 mA and 11.2 mA.

Charge Efficiency

The bq2060 uses four charge-efficiency factors to compensate for charge acceptance. These factors are coded in *Charge Efficiency, Efficiency Reduction Rate, Efficiency Drop Off Percentage,* and *Efficiency Temperature Compensation*.

The bq2060 applies the efficiency factor, EFF%, when RelativeStateOfCharge() is less than the value coded in *Efficiency Drop Off Percentage* EE 0x64. When RelativeStateOfCharge() is greater than or equal to the value coded in *Efficiency Drop Off Percentage*, EFF% and ERR% determine the charge efficiency rate. ERR% defines the percent efficiency reduction per percentage point of RelativeStateOfCharge() over *Efficiency Drop Off Percentage*. EFF% is encoded in *High Charge Efficiency* EE 0x4d according to the following equation:

EEPROM PROGRAMMING (continued)

$$\text{Charge Efficiency} = 10 \times (\text{EFF\%} - 74.5) \tag{15}$$

where

$74.5 \le \text{EFF\%} \le 100$

ERR% is encoded in *Efficiency Reduction Rate* EE 0x65 according to the following equation:

$$\text{Efficiency Reduction Rate} = \frac{\text{ERR\%}}{0.0125} \tag{16}$$

where

- $0 \le \text{ERR\%} \le 3.19$

The *Efficiency Drop Off* Percentage is stored in 2s complement of percent.

The bq2060 also adjusts the efficiency factors for temperature. TEFF% defines the percent efficiency reduction per degree C over 25°C. TEFF% is encoded in *Efficiency Temperature Compensation* EE 0x63 according to the following equation

$$\text{Efficiency Temperature Compensation} = \frac{\text{TEFF\%} \times 1.6}{0.0125} \tag{17}$$

where

- $0 \le \text{TEFF\%} \le 1.99$

The bq2060 applies all four charge-compensation factors when the CHEM bit in *Pack Configuration* is not set, denoting a nickel pack.

Effective Charge Efficiency Reduction (nickel only)

$$\% = \text{ERR\%}[\text{RSOC} - \text{EDOP\%}] + \text{TEFF\%}[\text{Temperature} - 25^{\circ}\text{C}] + \text{EFF\%} \tag{18}$$

where

- $\text{RSOC}() \le \text{EFF\%}$ and $T \ge 25°C$

If CHEM is set denoting a Li-ion pack, the bq2060 applies only the value coded in *High Charge Efficiency* and makes no other adjustments for charge acceptance.

CHARGE LIMITS AND TERMINATION TECHNIQUES

Charging Voltage

The 16-bit value, *Charging Voltage* EE 0x0a-0x0b programs the ChargingVoltage() value broadcast to a Smart Charger. It is also sets the base value for determining overvoltage conditions during charging and voltage compliance during a constant-voltage charging methodology. It is stored in mV.

Overvoltage

The 8-bit value, *Overvoltage Margin* EE 0x48, sets the limit over ChargingVoltage() that is to be considered as an overvoltage charge-suspension condition. The voltage in mV above the ChargingVoltage(), VOVM, that should trigger a charge suspend is encoded in *Overvoltage Margin* as follows:

$$\text{Overvoltage Margin} = \frac{\text{VOVM}}{16} \tag{19}$$

where

- VOVM is between 0 and 4080 mV.

Charging Current

ChargingCurrent() values are either broadcast to a Level 2 Smart Battery Charger or read from the bq2060 by a Level 3 Smart Battery Charger. The bq2060 sets the value of ChargingCurrent(), depending on the charge requirements and charge conditions of the pack.

EEPROM PROGRAMMING (continued)

When fast charge is allowed, the bq2060 sets ChargingCurrent() to the rate programmed in *Fast Charging Current* EE 0x1a-0x1b.

When fast charge terminates, the bq2060 sets ChargingCurrent() to zero and then to the *Maintenance Charging Current* EE 0x1c-0x1d when the termination condition ceases.

When Voltage() is less than EDV0, the bq2060 sets ChargingCurrent() to *Pre-charge Current* EE 0x1e-0x1f. Typically this rate is larger than the maintenance rate to charge a deeply depleted pack up to the point where it may be fast charged.

Fast Charging Current, Maintenance Charging Current, and *Pre-Charge Current* are stored in mA.

Charge Suspension

During charge, the bq2060 compares the current to the ChargingCurrent() plus the value IOIM. If the pack is charged at a current above the ChargingCurrent() plus IOIM, the bq2060 sets ChargingCurrent() to zero to stop charging. IOIM is programmed in the EEPROM value, *Overcurrent Margin*, encoded as

$$\text{Overcurrent Margin} = \frac{\text{IOIM}}{16} \tag{20}$$

Overcurrent Margin EE 0x49 may be used to program IOIM values of 0 to 4080 mA in 16-mA steps.

The desired temperature threshold for charge suspension, MAXTEMP, may be programmed between 45°C and 69°C in 1.6°C steps. *MaxT DeltaT* EE 0x45 (most significant nibble) is stored in a 4-bit value as shown:

$$\text{MaxT} = \left[\frac{69 - \text{MAXTEMP}}{1.6}\right] \tag{21}$$

The bq2060 suspends fast charge when fast charge continues past full by the amount programmed in *Maximum Overcharge* EE 0x2e-0x2f. *Maximum Overcharge* is programmed in 2s complement form of charge in mAh.

FULLY_CHARGED Bit Clear Threshold

The bq2060 clears the FULLY_CHARGED bit in BatteryStatus() when RelativeStateOfCharge() reaches the value, *Fully Charged Clear %*EE 0x4c. *Fully Charged Clear %* is an 8-bit value and is stored as a 2s complement of percent.

Fast Charge Termination Percentage

The bq2060 sets RM to a percentage of FCC on charge termination if the CSYNC bit is set in the Pack Configuration register. The percentage of FCC is stored in *Fast Charge Termination %* in EE 0x4b. The value is stored in 2s complement of percent.

Cycle Count Threshold

Cycle Count Threshold 0x3c–0x3d sets the number of mAh that must be removed from the battery to increment CycleCount(). Cycle Count Threshold is a 16-bit value stored in 2s complement of charge in mAh.

EEPROM PROGRAMMING (continued)

ΔT/ Δt Rate Programming

The ΔT portion of the ΔT/Δt rate is programmed in *DeltaT*, the low nibble of *MaxT DeltaT* EE 0x45 (least significant nibble). The Δt portion is programmed in *DeltaT Time* EE 0x4e.

$$\Delta T/\Delta t = \frac{[\text{DeltaT} \times 2 + 16]/10}{[320 - \text{DeltaT Time} \times 20]}\left[\frac{^\circ C}{s}\right] \quad (22)$$

DeltaT	Δ (°C)	DeltaT_Time	t (s)
0	1.6	00	320
1	1.8	01	300
2	2.0	02	280
3	2.2	03	260
4	2.4	04	240
5	2.6	05	220
6	2.8	06	200
7	3.0	07	180
8	3.2	08	160
9	3.4	09	140
a	3.6	0a	120
b	3.8	0b	100
c	4.0	0c	80
d	4.2	0d	60
e	4.4	0e	40
f	4.6	0f	20

ΔT/ Δt Holdoff Timer Programming

The holdoff timer is programmed in the lower nibble of *Holdoff Time* EE 0x4f. The holdoff time is 320 s minus 20 times the *Holdoff Time* value.

Holdoff Time	Holdoff Time (s)	*Holdoff Time*	Holdoff Time (s)
00	320	08	160
01	300	09	140
02	280	0a	120
03	260	0b	100
04	240	0c	80
05	220	0d	60
06	200	0e	40
07	180	0f	20

Current Taper Termination Characteristics

Two factors in the EEPROM set the current taper termination for Li-ion battery packs. The two coded locations are *Current Taper Qual Voltage* EE 0x4f and *Current Taper Threshold* EE 0x4e. Current taper termination occurs during charging when the pack voltage is above the charging voltage minus CELLV (mV) and the charging current is below the threshold coded in *Current Taper Threshold* for at least 40 s.

$$\text{Current Taper Qual Voltage} = \frac{\text{CELLV}}{2} \quad (23)$$

$$\text{Current TaperThreshhold} = \frac{R_s \times i}{0.5625} \quad (24)$$

where i = the desired current termination threshold in mA, and R_S = VFC sense resistor in ohms.

PACK OPTIONS

Pack Configuration

Pack Configuration EE 0x3f contains bit-programmable features.

b7	b6	b5	b4	b3	b2	b1	b0
DMODE	SEAL	CSYNC	CEDV	VCOR	CHEM	LCC1	LCC0

DMODE

The DMODE bit determines whether the LED outputs will indicate AbsoluteStateOfCharge() or RelativeStateOfCharge()

0 LEDs reflect AbsoluteStateOfCharge()

1 LEDs reflect RelativeStateOfCharge()

SEAL

The SEAL bit determines the SMBus access state of the bq2060 on reset

0 SMBus commands (0x00–0xff) are accessible for both read and write.

1 SMBus read access is limited to commands (0x05–0x1c) and (0x20–0x23). SMBus read/write access is limited to commands (0x00–0x04), (0x2f), and (0x3c–0x3f).

CSYNC

In usual operation of the bq2060, the CSYNC bit is set so that the coulomb counter is adjusted when a fast charge termination is detected. In some applications, especially those where an externally controlled charger is used, it may be desirable *not* to adjust the coulomb counter. In these cases the CSYNC bit should be cleared.

0 The bq2060 does not alter RM at the time of a valid charge termination.

1 The bq2060 updates RM with a programmed percentage of FCC at a valid charge termination.

CEDV

The CEDV bit determines whether the bq2060 implements automatic EDV compensation to calculate the EDV0, EDV1, and EDV2 thresholds based on rate, temperature, and capacity. If reset, the bq2060 uses the fixed values programmed in EEPROM for EDV0, EDV1, and EDV2. If set the bq2060 calculates EDV0, EDV1, and EDV2.

0 EDV compensation disabled

1 EDV compensation enabled

VCOR

The VCOR bit enables the midrange voltage correction algorithm. When set, the bq2060 compares the pack voltage to RM and may adjust RM according to the values programmed in *VOC25, VOC50,* and *VOC75*.

0 Midrange corrections disabled

1 Midrange corrections enabled

CHEM

The CHEM bit configures the bq2060 for nickel packs (NiCd or NiMH) or Li-ion packs. When set, the bq2060 employs the configuration parameters in EEPROM designated for Li-ion. When not set, the bq2060 employs the configuration parameters designated for nickel.

0 The bq2060 uses nickel configuration parameters.

1 The bq2060 uses Li-ion configuration parameters

LCC0 and LCC1

The LCC0 and LCC1 bits configure the cell voltage inputs ($VCELL_{1–4}$).

NO. OF SERIES CELLS	LCC1 LCC0	CELL VOLTAGE INPUTS
NA	00	$VCELL_4$= Cell Stack
2	01	$VCELL_1$ = Cell 1 $VCELL_2$ = Cell 2
3	10	$VCELL_1$= Cell 1 $VCELL_2$= Cell 2 $VCELL_3$= Cell 3
4	11	$VCELL_1$= Cell 1 $VCELL_2$= Cell 2 $VCELL_3$= Cell 3 $VCELL_4$= Cell 4

For Li-ion packs with individual measurements, LCC0 and LCC1 define the number of series elements and their voltage measurement inputs. In each case (2, 3, or 4), the bq2060 uses the highest numbered cell voltage input to measure the pack voltage measurement as returned with Voltage(). For nickel chemistries or Li-ion without single-cell measurements, LCC0 and LCC1 must be set to 00. VCELL4 is the pack voltage input for this programming.

Remaining Time and Capacity Alarms

Remaining Time Alarm in EE 0x02–0x03 and *Remaining Capacity Alarm* in 0x04–0x05 set the alarm thresholds used in the SMBus command codes 0x01 and 0x02, respectively. *Remaining Time Alarm* is stored in minutes and *Remaining Capacity Alarm* in mAh.

Secondary Protection Limits for Li-ion

The cell undervoltage (V_{UV}) and overvoltage (V_{OV}) limits are programmed in *Cell Undervoltage/Overvoltage* EE 0x4a according to the equations:

$$\text{Cell Undervoltage/Overvoltage (lower)} = \frac{V_{OV} - 4096}{32} \quad (25)$$

$$\text{Cell Undervoltage/Overvoltage (upper)} = \frac{V_{OV} - 2048}{64} \quad (26)$$

CELL UNDER/ OVERVOLTAGE (UPPER NIBBLE)	V_{UV}(mV)	CELL UNDER/ OVER VOLTAGE (LOWER NIBBLE)	V_{OV}(mV)
0	2048	0	4096
1	2112	1	4128
2	2176	2	4160
3	2240	3	4192
4	2304	4	4224
5	2368	5	4256
6	2432	6	4288
7	2496	7	4320
8	2560	8	4352
9	2624	9	4384
a	2688	a	4416
b	2752	b	4448

CELL UNDER/ OVERVOLTAGE (UPPER NIBBLE)	V_{UV}(mV)	CELL UNDER/ OVER VOLTAGE (LOWER NIBBLE)	V_{OV}(mV)
c	2816	c	4480
d	2880	d	4512
e	2944	e	4544
f	3008	f	4576

Cycle Count Initialization

Cycle Count EE 0x0e–0x0f stores the initial value for the CycleCount() function. It should be programmed to 0x0000.

Control Modes

Control Mode EE 0x51 contains additional bit-programmable features.

b7	b6	b5	b4	b3	b2	b1	b0
NDF	—	HPE	CPE	LED	SC	—	SM

NDF

The NDF bit disables the digital filter during discharge if the SMBC and SMBD lines are high.

0 Digital filter enabled all the time

1 Digital filter disabled if SMBC and SMBD are high

HPE

The HPE bit enables/disables PEC transmissions to the Smart Battery host for master mode alarm messages.

0 No PEC byte on alarm warning to host

1 PEC byte on alarm warning to host

CPE

The CPE bit enables/disables PEC transmissions to the Smart Battery Charger for master mode alarm messages.

0 No PEC byte on broadcasts to charger

1 PEC byte on broadcasts to charger

LED

The LED bit configures the bq2060 for 4- or 5-LED indication

0 Selects the 5-LED indication mode

1 Selects the 4-LED indication mode

SC

The SC bit enables learning cycle optimization for a Smart Charger or independent charge

0 Learning cycle optimized for independent charger

1 Learning cycle optimized for Smart Charger

SM

The SM bit enables/disables master mode broadcasts by the bq2060

0	Broadcasts to host and charger enabled
1	Broadcasts to host and charger disabled

If the SM bit is set, modifications to bits in BatteryMode() does not re-enable broadcasts.

MEASUREMENT CALIBRATION

ADC

To describe how the bq2060 calculates reported battery and individual cell voltages, the following abbreviations and designations are used:

$VCELL_1$–4 = voltages at the input pins of the bq2060

VCELL1–4 = reported cell voltages

Vnl–4 = voltages at the different series nodes in the battery

Voltage() = reported battery voltage

V_{sr} = voltage across the sense resistor

The reported voltages measurements, Voltage() and VCELL1–4, may be calibrated by adjusting five 8- or 16-bit registers in EEPROM: *ADC Offset* in EE0x62, *ADC Voltage Gain* in EE 0x66–0x67, *Cell 2 Calibration Factor* in EE 0x63, *Cell 3 Calibration Factor* in EE 0x64, and *Cell 4 Calibration Factor* in EE 0x65.

The bq2060 first computes the node voltages Vnl, Vn2, Vn3, and Vn4. The node voltages are inputs to the voltage dividers to the $VCELL_1$through $VCELL_4$ input pins of the bq2060. The bq2060 computes node voltages to calculate the five reported voltages by the bq2060: Voltage(), VCELL1, VCELL2, VCELL3, and VCELL4.

An *ADC Voltage Gain* factor of 20,000 is the nominal value when using the recommended cell-voltage division ratios of 16:1 on the $VCELL_4$ and $VCELL_3$ inputs and 8:1 on the $VCELL_2$ and $VCELL_1$ inputs. The bq2060 subtracts the voltage across the sense resistor from the measurements so that the reported voltages reflect the cell-stack voltages only.

The bq2060 compute the node voltages as

$$Vn1 = \left[\frac{VCELL \times 32768}{1250} + ADC\ Offset\right] \times \left[\frac{ADC\ Voltage\ Gain}{65536}\right] \tag{27}$$

$$Vn2 = \left[\frac{VCELL \times 32768}{1250} + ADC\ Offset\right] \times \left[\frac{ADC\ Voltage\ Gain + 8 \times (Cell\ 2\ CalibrationFactor)}{65536}\right] \tag{28}$$

$$Vn3 = \left[\frac{VCELL \times 32768}{1250} + ADC\ Offset\right] \times \left[ADC\ Voltage\ Gain + 8 \times (Cell\ 3\ CalibrationFactor)\right] \times \left[\frac{2}{65536}\right] \tag{29}$$

$$Vn4 = \left[\frac{VCELL \times 32768}{1250} + ADC\ Offset\right] \times \left[ADC\ Voltage\ Gain + 8 \times (Cell\ 4\ CalibrationFactor)\right] \times \left[\frac{2}{65536}\right] \tag{30}$$

Note: With LCC1-LCC0 = 00, *Cell 4 Calibration Factor* = 0.

ADC Offset adjusts the ADC reading for voltage and current measurements. *ADC Offset* is a signed 8-bit value that cancels offset present in the circuit with no potential or current flow. *ADC Offset* is typically set between -20 and 20.

The bq2060 uses the computed node voltages to calculate the reported voltages. It does not compute reported cell voltages greater than the selected number of nodes. If no individual cell voltages are to be measured, LCC1–LCC0 should be set to 00 and the top of the battery stack should be connected to a voltage divider to the $VCELL_4$ input.

The bq2060 computes the reported voltages as

Voltage() = Vn4(LCC1–LCC0 = 11 or 00) – V_{sr}
Voltage() = Vn3(LCC1–LCC0 = 10) – V_{sr}
Voltage() = Vn2 (LCC1–LCC0 = 01) – V_{sr}
VCELL4 = Vn4- Vn3
VCELL3 = Vn3- Vn2
VCELL2 = Vn2- Vn1
VCELL1 = Vn1- V_{sr}

Current

The bq2060 scales Current() to mA units by the 16-bit value *ADC Sense Resistor Gain* in EE 0x68–0x69. Adjusting *ADC Sense Resistor Gain* from its nominal value provides a method to calibrate the current readings for variances in the ADC gain, internal voltage reference, and sense resistor value. The bq2060 calculates Current() by

$$\text{Current} = \frac{[\text{ADC Reading} + \text{ADC Offset} \times \text{ADC Sense Resistor Gain}]}{16384} \tag{31}$$

The nominal value for *ADC Sense Resistor Gain* is given by Equation 4.

VFC

To calibrate the coulomb counting measurement for VFC gain errors and sense resistor tolerance, the value of *VFC Sense Resistor Gain* EE 0x6a-0x6b may be adjusted from its nominal value.

The nominal value of *VFC Sense Resistor Gain* is given by Equation 5.

The bq2060 VFC circuit can introduce a signal opposite in sign from that of the inherent device and circuit offset to cancel this error. The offset calibration routine is initiated with commands to ManufacturerAccess().

The bq2060 calculates the offset with the calibration routine and stores the calibration value using the least 21 bits of *VFC Offset* in EE 0x5e–0x60.

The least 20 bits store the offset calibration value (OCV). The sign of the offset calibration value is positive if the 21st bit is 0.

$$\text{OCV} = \frac{0.6\ \text{V}}{\text{VFC Offsets} - 0} \tag{32}$$

Temperature

The bq2060 uses *Temperature Offset* in EE 0x61 to calibrate the Temperature() function for offset. The required offset adjustment, TOFF (C), sets *Temperature Offse*t according to the equation

$$\text{Temperature Offset} = \text{TOFF} \times 10 \tag{33}$$

where

$-12.8 \le \text{TOFF} \le 12.7$

CONSTANTS AND STRING DATA

EEPROM Constants

Check/Byte 1 EE 0x00–0x01 and *Check Byte 2* EE 0x7e–0x7f must be programmed to 0x3c7f and 0xa55a, respectively.

Specification Information

Specification Information EE 0x14–0x15 stores the default value for the SpecificationInfo() function. It is stored in EEPROM in the same format as the data returned by the SpecificationInfo().

Manufacture Date

Manufacture Date EE 0x16–0x17 stores the default value for the ManufactureDate() function. It is stored in EEPROM in the same format as the data returned by the ManufactureDate().

Serial Number

Serial Number EE 0x18–0x19 stores the default value for the SerialNumber() function. It is stored in EEPROM in the same format as the data returned by the SerialNumber().

Manufacturer Name Data

Manufacturer Name Length EE 0x20 stores the length of the desired string that is returned by the ManufacturerName() function. Locations EE 0x21–0x2a store the characters for ManufacturerName() in ASCII code.

Device Name Data

Device Name Length EE 0x30 stores the length of the desired string that is returned by the DeviceName() function. Locations EE 0x31-0x37 store the characters for DeviceName() in ASCII code.

Device Chemistry Data

Device Chemistry Length EE 0x40 stores the length of the desired string that is returned by the DeviceChemistry() function. Locations EE 0x41–0x44 store the characters for DeviceChemistry() in ASCII code.

Manufacturers Data Length

Manufacturers Data Length EE 0x50 stores the length of the desired number of bytes that is returned by the ManufacturersData() function. It should be set to 7.

PACKAGING INFORMATION

Orderable Device	Status (1)	Package Type	Package Drawing	Pins	Package Qty	Eco Plan (2)	Lead finish/ Ball material (6)	MSL Peak Temp (3)	Op Temp (°C)	Device Marking (4/5)	Samples
BQ2060SS-E207-EP	ACTIVE	SSOP	DBQ	28	40	RoHS & Green	NIPDAU	Level-2-260C-1 YEAR	0 to 70	2060SS E207	Samples
BQ2060SS-E207TR-EP	ACTIVE	SSOP	DBQ	28	2500	RoHS & Green	NIPDAU	Level-2-260C-1 YEAR	0 to 70	2060SS E207	Samples
BQ2060SS-E411	ACTIVE	SSOP	DBQ	28	40	RoHS & Green	NIPDAU	Level-2-260C-1 YEAR		2060SS E411	Samples
BQ2060SS-E411TR	ACTIVE	SSOP	DBQ	28	2500	RoHS & Green	NIPDAU	Level-2-260C-1 YEAR		2060SS E411	Samples

(1) The marketing status values are defined as follows:
ACTIVE: Product device recommended for new designs.
LIFEBUY: TI has announced that the device will be discontinued, and a lifetime-buy period is in effect.
NRND: Not recommended for new designs. Device is in production to support existing customers, but TI does not recommend using this part in a new design.
PREVIEW: Device has been announced but is not in production. Samples may or may not be available.
OBSOLETE: TI has discontinued the production of the device.

(2) **RoHS:** TI defines "RoHS" to mean semiconductor products that are compliant with the current EU RoHS requirements for all 10 RoHS substances, including the requirement that RoHS substance do not exceed 0.1% by weight in homogeneous materials. Where designed to be soldered at high temperatures, "RoHS" products are suitable for use in specified lead-free processes. TI may reference these types of products as "Pb-Free".
RoHS Exempt: TI defines "RoHS Exempt" to mean products that contain lead but are compliant with EU RoHS pursuant to a specific EU RoHS exemption.
Green: TI defines "Green" to mean the content of Chlorine (Cl) and Bromine (Br) based flame retardants meet JS709B low halogen requirements of <=1000ppm threshold. Antimony trioxide based flame retardants must also meet the <=1000ppm threshold requirement.

(3) MSL, Peak Temp. - The Moisture Sensitivity Level rating according to the JEDEC industry standard classifications, and peak solder temperature.

(4) There may be additional marking, which relates to the logo, the lot trace code information, or the environmental category on the device.

(5) Multiple Device Markings will be inside parentheses. Only one Device Marking contained in parentheses and separated by a "~" will appear on a device. If a line is indented then it is a continuation of the previous line and the two combined represent the entire Device Marking for that device.

(6) Lead finish/Ball material - Orderable Devices may have multiple material finish options. Finish options are separated by a vertical ruled line. Lead finish/Ball material values may wrap to two lines if the finish value exceeds the maximum column width.

Important Information and Disclaimer: The information provided on this page represents TI's knowledge and belief as of the date that it is provided. TI bases its knowledge and belief on information provided by third parties, and makes no representation or warranty as to the accuracy of such information. Efforts are underway to better integrate information from third parties. TI has taken and

continues to take reasonable steps to provide representative and accurate information but may not have conducted destructive testing or chemical analysis on incoming materials and chemicals.
TI and TI suppliers consider certain information to be proprietary, and thus CAS numbers and other limited information may not be available for release.

In no event shall TI's liability arising out of such information exceed the total purchase price of the TI part(s) at issue in this document sold by TI to Customer on an annual basis.

TAPE AND REEL INFORMATION

REEL DIMENSIONS

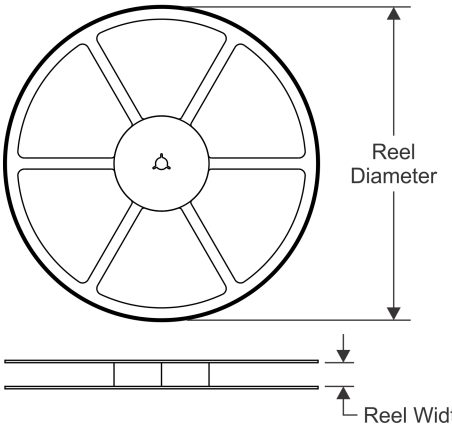

TAPE DIMENSIONS

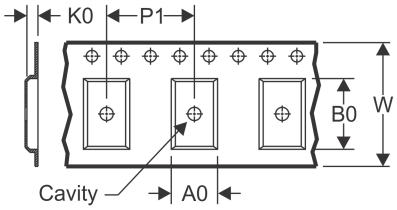

A0	Dimension designed to accommodate the component width
B0	Dimension designed to accommodate the component length
K0	Dimension designed to accommodate the component thickness
W	Overall width of the carrier tape
P1	Pitch between successive cavity centers

QUADRANT ASSIGNMENTS FOR PIN 1 ORIENTATION IN TAPE

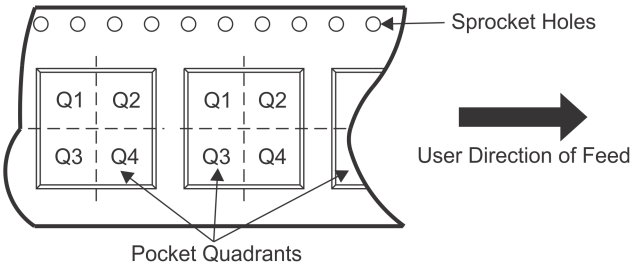

*All dimensions are nominal

Device	Package Type	Package Drawing	Pins	SPQ	Reel Diameter (mm)	Reel Width W1 (mm)	A0 (mm)	B0 (mm)	K0 (mm)	P1 (mm)	W (mm)	Pin1 Quadrant
BQ2060SS-E411TR	SSOP	DBQ	28	2500	330.0	16.4	6.5	10.3	2.1	8.0	16.0	Q1

TAPE AND REEL BOX DIMENSIONS

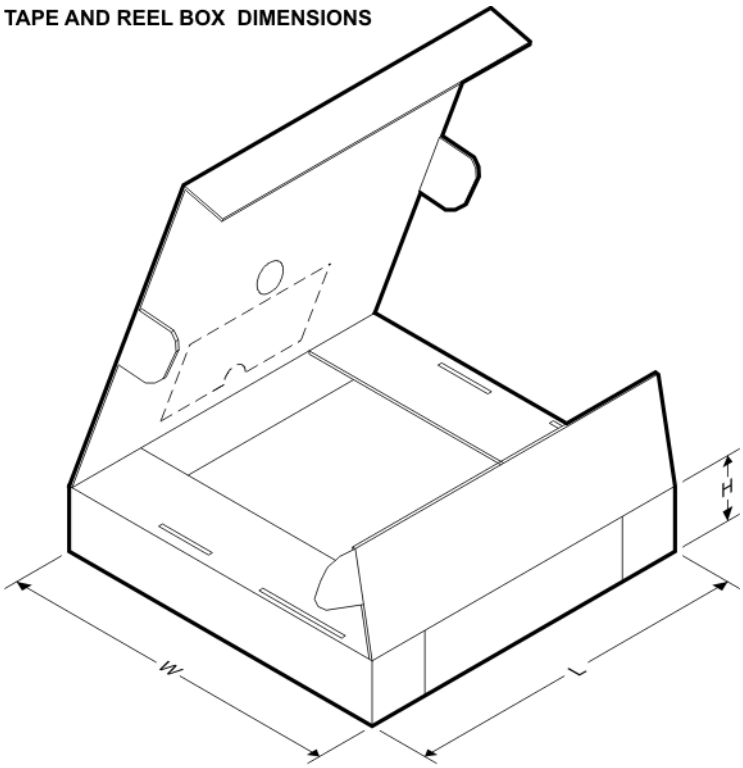

*All dimensions are nominal

Device	Package Type	Package Drawing	Pins	SPQ	Length (mm)	Width (mm)	Height (mm)
BQ2060SS-E411TR	SSOP	DBQ	28	2500	350.0	350.0	43.0

TUBE

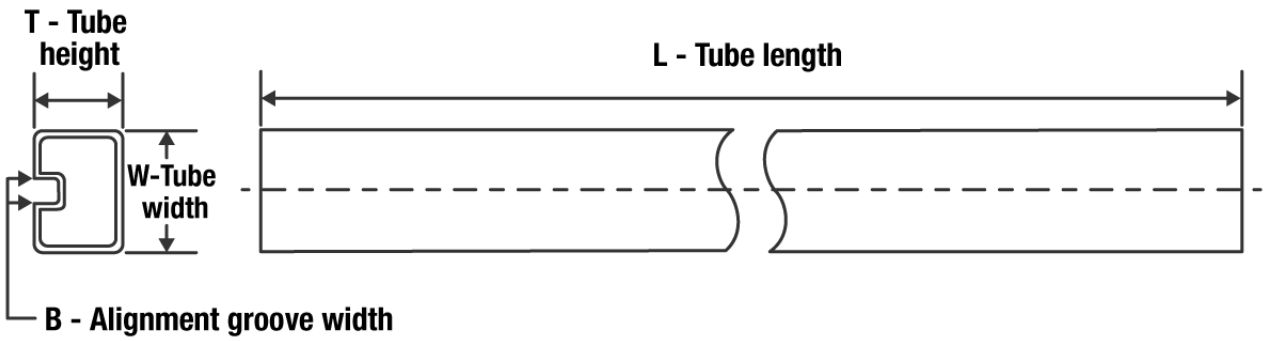

*All dimensions are nominal

Device	Package Name	Package Type	Pins	SPQ	L (mm)	W (mm)	T (µm)	B (mm)
BQ2060SS-E207-EP	DBQ	SSOP	28	40	505.46	6.76	3810	4

DBQ (R-PDSO-G28) PLASTIC SMALL-OUTLINE PACKAGE

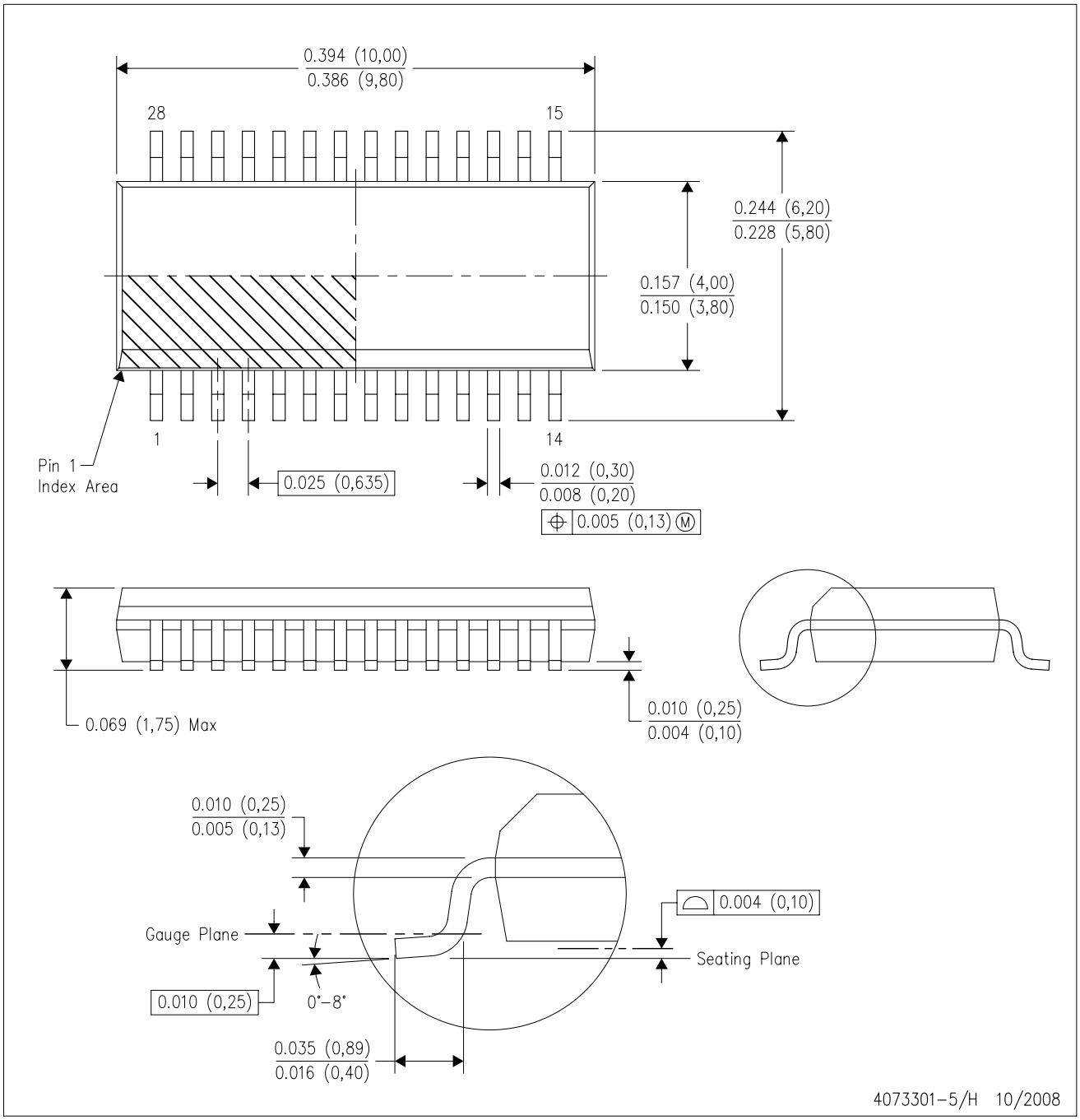

NOTES:
A. All linear dimensions are in inches (millimeters).
B. This drawing is subject to change without notice.
C. Body dimensions do not include mold flash or protrusion not to exceed 0.006 (0,15) per side.
D. Falls within JEDEC MO-137 variation AF.

IMPORTANT NOTICE AND DISCLAIMER

TI PROVIDES TECHNICAL AND RELIABILITY DATA (INCLUDING DATA SHEETS), DESIGN RESOURCES (INCLUDING REFERENCE DESIGNS), APPLICATION OR OTHER DESIGN ADVICE, WEB TOOLS, SAFETY INFORMATION, AND OTHER RESOURCES “AS IS” AND WITH ALL FAULTS, AND DISCLAIMS ALL WARRANTIES, EXPRESS AND IMPLIED, INCLUDING WITHOUT LIMITATION ANY IMPLIED WARRANTIES OF MERCHANTABILITY, FITNESS FOR A PARTICULAR PURPOSE OR NON-INFRINGEMENT OF THIRD PARTY INTELLECTUAL PROPERTY RIGHTS.

These resources are intended for skilled developers designing with TI products. You are solely responsible for (1) selecting the appropriate TI products for your application, (2) designing, validating and testing your application, and (3) ensuring your application meets applicable standards, and any other safety, security, regulatory or other requirements.

These resources are subject to change without notice. TI grants you permission to use these resources only for development of an application that uses the TI products described in the resource. Other reproduction and display of these resources is prohibited. No license is granted to any other TI intellectual property right or to any third party intellectual property right. TI disclaims responsibility for, and you will fully indemnify TI and its representatives against, any claims, damages, costs, losses, and liabilities arising out of your use of these resources.

TI’s products are provided subject to TI’s Terms of Sale or other applicable terms available either on ti.com or provided in conjunction with such TI products. TI’s provision of these resources does not expand or otherwise alter TI’s applicable warranties or warranty disclaimers for TI products.

TI objects to and rejects any additional or different terms you may have proposed.

Mailing Address: Texas Instruments, Post Office Box 655303, Dallas, Texas 75265
Copyright © 2022, Texas Instruments Incorporated