# LM140K 3 端子正稳压器

查询样品: LM140K

## 特性

- **1A** 负载上的完整技术规格
- **$T_j$ = 25°C** 时，**±4%** 的输出电压耐受
- 内部热过载保护
- 内部短路电流限制
- 输出晶体管安全区保护
- 已经测试了 **P+**产品增强性能

## 说明

LM140K 单片 3 端子正电压稳压器采用内部电流限制、热关断和安全区补偿，从而使得它们基本上不会被损坏。 如果提供足够散热，它们能够提供超过 1.0A 的输出电流。 它们在广泛应用中被用作固定电压稳压器，这些应用包括旨在消除与单点稳压相关的噪声和配电问题的本地（卡上）稳压。 除了用作一个固定电压稳压器，这些器件可与外部组件一同使用以获得可调输出电压和电流。

花费了大量的精力来使整个稳压器系列易于使用并且大大减少了外部组件的数量。 虽然这的确改进了瞬态响应，但是也没有必要将输出旁路。 只有当稳压器远离电源的滤波电容器时，才需要输入旁路。

LM104K 采用钢制 TO-3 功率封装，提供 5V，12V 和 15V 电压选项。

## Typical Applications

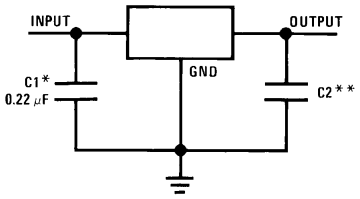


*Required if the regulator is located far from the power supply filter.
**Although no output capacitor is needed for stability, it does help transient response. (If needed, use 0.1 µF, ceramic disc).

**Figure 1. Fixed Output Regulator**

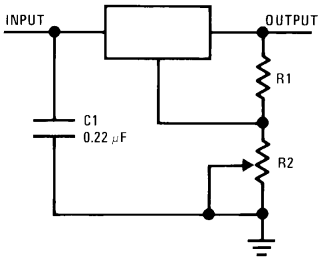


$V_{OUT}$ = 5V + (5V/R1 + $I_Q$) R2 5V/R1 > 3 $I_Q$, load regulation ($L_r$) ≈ [(R1 + R2)/R1] ($L_r$ of LM140K-5.0).

**Figure 2. Adjustable Output Regulator**

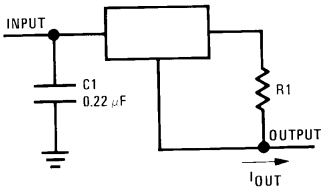


$$I_{OUT} = \frac{V2\text{-}3}{R1} + I_Q$$

$\Delta I_Q$ = 1.3 mA over line and load changes.

**Figure 3. Current Regulator**

Please be aware that an important notice concerning availability, standard warranty, and use in critical applications of Texas Instruments semiconductor products and disclaimers thereto appears at the end of this data sheet.
All trademarks are the property of their respective owners.

PRODUCTION DATA information is current as of publication date. Products conform to specifications per the terms of the Texas Instruments standard warranty. Production processing does not necessarily include testing of all parameters.

Copyright © 2013, Texas Instruments Incorporated

## Connection Diagrams

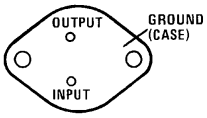


**Figure 4. TO-3 Metal Can (Bottom View)**

These devices have limited built-in ESD protection. The leads should be shorted together or the device placed in conductive foam during storage or handling to prevent electrostatic damage to the MOS gates.

## Absolute Maximum Ratings(1)(2)(3)

| | | |
|---|---|---|
| DC Input Voltage | | 35V |
| Internal Power Dissipation(4) | | Internally Limited |
| Maximum Junction Temperature | | 150°C |
| Storage Temperature Range | | −65°C to +150°C |
| Lead Temperature (Soldering, 10 sec.) | TO-3 Package (NDS) | 300°C |
| ESD Susceptibility(5) | | 2 kV |

(1) Absolute Maximum Ratings are limits beyond which damage to the device may occur. Operating Conditions are conditions under which the device functions but the specifications might not be ensured. For ensured specifications and test conditions see the Electrical Characteristics.
(2) Specifications and availability for military grade LM140H/883 and LM140K/883 can be found in the LM140QML datasheet (SNVS382). Specifications and availability for military and space grade LM140H/JAN and LM140K/JAN can be found in the LM140JAN datasheet (SNVS399).
(3) If Military/Aerospace specified devices are required, please contact the Texas Instruments Sales Office/Distributors for availability and specifications.
(4) The maximum allowable power dissipation at any ambient temperature is a function of the maximum junction temperature for operation ($T_{JMAX}$ = 125°C or 150°C), the junction-to-ambient thermal resistance ($\theta_{JA}$), and the ambient temperature ($T_A$). $P_{DMAX} = (T_{JMAX} - T_A)/\theta_{JA}$. If this dissipation is exceeded, the die temperature will rise above $T_{JMAX}$ and the electrical specifications do not apply. If the die temperature rises above 150°C, the device will go into thermal shutdown. For the TO-3 package (NDS), the junction-to-ambient thermal resistance ($\theta_{JA}$) is 39°C/W. When using a heatsink, $\theta_{JA}$ is the sum of the 4°C/W junction-to-case thermal resistance ($\theta_{JC}$) of the TO-3 package and the case-to-ambient thermal resistance of the heatsink.
(5) ESD rating is based on the human body model, 100 pF discharged through 1.5 kΩ.

## Operating Conditions(1)

| | | |
|---|---|---|
| Temperature Range ($T_A$)(2) | LM140 | −55°C to +125°C |

(1) Absolute Maximum Ratings are limits beyond which damage to the device may occur. Operating Conditions are conditions under which the device functions but the specifications might not be ensured. For ensured specifications and test conditions see the Electrical Characteristics.
(2) The maximum allowable power dissipation at any ambient temperature is a function of the maximum junction temperature for operation ($T_{JMAX}$ = 125°C or 150°C), the junction-to-ambient thermal resistance ($\theta_{JA}$), and the ambient temperature ($T_A$). $P_{DMAX} = (T_{JMAX} - T_A)/\theta_{JA}$. If this dissipation is exceeded, the die temperature will rise above $T_{JMAX}$ and the electrical specifications do not apply. If the die temperature rises above 150°C, the device will go into thermal shutdown. For the TO-3 package (NDS), the junction-to-ambient thermal resistance ($\theta_{JA}$) is 39°C/W. When using a heatsink, $\theta_{JA}$ is the sum of the 4°C/W junction-to-case thermal resistance ($\theta_{JC}$) of the TO-3 package and the case-to-ambient thermal resistance of the heatsink.


Copyright © 2013, Texas Instruments Incorporated

## LM140 Electrical Characteristics

55°C ≤ $T_J$ ≤ + 150°C unless otherwise specified(1)

| Symbol | Output Voltage | | 5V | | | 12V | | | 15V | | | Units |
|---|---|---|---|---|---|---|---|---|---|---|---|---|
| | Input Voltage (unless otherwise noted) | | 10V | | | 19V | | | 23V | | | |
| | Parameter | Conditions | Min | Typ | Max | Min | Typ | Max | Min | Typ | Max | |
| $V_O$ | Output Voltage | $T_J$ = 25°C, 5 mA ≤ $I_O$ ≤ 1A | 4.9 | 5 | 5.1 | 11.75 | 12 | 12.25 | 14.7 | 15 | 15.3 | V |
| | | $P_D$ ≤ 15W, 5 mA ≤ $I_O$ ≤ 1A | 4.8 | | 5.2 | 11.5 | | 12.5 | 14.4 | | 15.6 | V |
| | | $V_{MIN}$ ≤ $V_{IN}$ ≤ $V_{MAX}$ | (7.5 ≤ $V_{IN}$ ≤ 20) | | | (14.8 ≤ $V_{IN}$ ≤ 27) | | | (17.9 ≤ $V_{IN}$ ≤ 30) | | | V |
| $\Delta V_O$ | Line Regulation | $I_O$ = 500 mA | | | 10 | | | 18 | | | 22 | mV |
| | | $T_J$ = 25°C, $\Delta V_{IN}$, −55°C ≤ $T_J$ ≤ +150°C | (7.5 ≤ $V_{IN}$ ≤ 20) | | | (14.8 ≤ $V_{IN}$ ≤ 27) | | | (17.9 ≤ $V_{IN}$ ≤ 30) | | | V |
| | | $T_J$ = 25°C | | 3 | 10 | | 4 | 18 | | 4 | 22 | mV |
| | | $\Delta V_{IN}$, −55°C ≤ $T_J$ ≤ +150°C | (7.5 ≤ $V_{IN}$ ≤ 20) | | | (14.5 ≤ $V_{IN}$ ≤ 27) | | | (17.5 ≤ $V_{IN}$ ≤ 30) | | | V |
| | | $T_J$ = 25°C | | | 4 | | | 9 | | | 10 | mV |
| | | Over Temperature | | | 12 | | | 30 | | | 30 | mV |
| | | $\Delta V_{IN}$ | (8 ≤ $V_{IN}$ ≤ 12) | | | (16 ≤ $V_{IN}$ ≤ 22) | | | (20 ≤ $V_{IN}$ ≤ 26) | | | V |
| $\Delta V_O$ | Load Regulation | $T_J$ = 25°C, 5 mA ≤ $I_O$ ≤ 1.5A | | 10 | 25 | | 12 | 32 | | 12 | 35 | mV |
| | | $T_J$ = 25°C, 250 mA ≤ $I_O$ ≤ 750 mA | | | 15 | | | 19 | | | 21 | mV |
| | | Over Temperature, 5 mA ≤ $I_O$ ≤ 1A | | | 25 | | | 60 | | | 75 | mV |
| $I_Q$ | Quiescent Current | $T_J$ = 25°C | | | 6 | | | 6 | | | 6 | mA |
| | | Over Temperature | | | 6.5 | | | 6.5 | | | 6.5 | mA |
| $\Delta I_Q$ | Quiescent Current Change | 5 mA ≤ $I_O$ ≤ 1A | | 0.5 | | | 0.5 | | | 0.5 | | mA |
| | | $T_J$ = 25°C, $I_O$ = 1A | | | 0.8 | | | 0.8 | | | 0.8 | mA |
| | | $V_{MIN}$ ≤ $V_{IN}$ ≤ $V_{MAX}$ | (7.5 ≤ $V_{IN}$ ≤ 20) | | | (14.8 ≤ $V_{IN}$ ≤ 27) | | | (17.9 ≤ $V_{IN}$ ≤ 30) | | | V |
| | | $I_O$ = 500 mA | | | 0.8 | | | 0.8 | | | 0.8 | mA |
| | | $V_{MIN}$ ≤ $V_{IN}$ ≤ $V_{MAX}$ | (8 ≤ $V_{IN}$ ≤ 25) | | | (15 ≤ $V_{IN}$ ≤ 30) | | | (17.9 ≤ $V_{IN}$ ≤ 30) | | | V |
| $V_N$ | Output Noise Voltage | $T_A$ = 25°C, 10 Hz ≤ f ≤ 100 kHz | | 40 | | | 75 | | | 90 | | µV |
| $\frac{\Delta V_{IN}}{\Delta V_{OUT}}$ | Ripple Rejection | $T_J$ = 25°C, f = 120 Hz, $I_O$ = 1A | 68 | 80 | | 61 | 72 | | 60 | 70 | | dB |
| | | or f = 120 Hz, $I_O$ = 500 mA, Over Temperature, | 68 | | | 61 | | | 60 | | | dB |
| | | $V_{MIN}$ ≤ $V_{IN}$ ≤ $V_{MAX}$ | (8 ≤ $V_{IN}$ ≤ 18) | | | (15 ≤ $V_{IN}$ ≤ 25) | | | (18.5 ≤ $V_{IN}$ ≤ 28.5) | | | V |
| $R_O$ | Dropout Voltage | $T_J$ = 25°C, $I_O$ = 1A | | 2.0 | | | 2.0 | | | 2.0 | | V |
| | Output Resistance | f = 1 kHz | | 8 | | | 18 | | | 19 | | mΩ |
| | Short-Circuit Current | $T_J$ = 25°C | | 2.1 | | | 1.5 | | | 1.2 | | A |
| | Peak Output Current | $T_J$ = 25°C | | 2.4 | | | 2.4 | | | 2.4 | | A |
| | Average TC of $V_O$ | Min, $T_J$ = 0°C, $I_O$ = 5 mA | | −0.6 | | | −1.5 | | | −1.8 | | mV/°C |
| $V_{IN}$ | Input Voltage Required to Maintain Line Regulation | $T_J$ = 25°C | 7.5 | | | 14.5 | | | 17.5 | | | V |

(1) All characteristics are measured with a 0.22 µF capacitor from input to ground and a 0.1 µF capacitor from output to ground. All characteristics except noise voltage and ripple rejection ratio are measured using pulse techniques ($t_w$ ≤ 10 ms, duty cycle ≤ 5%). Output voltage changes due to changes in internal temperature must be taken into account separately.

Copyright © 2013, Texas Instruments Incorporated

## Typical Performance Characteristics

**Maximum Average Power Dissipation**

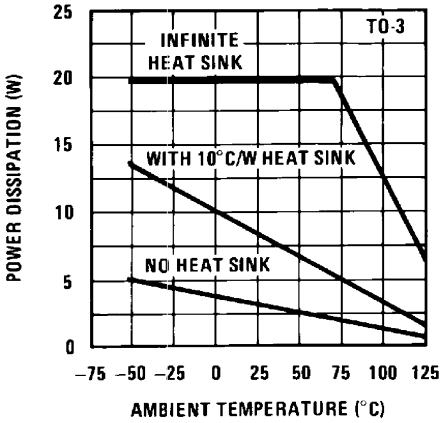


Figure 5.

**Output Voltage (Normalized to 1V at $T_J$ = 25°C)**

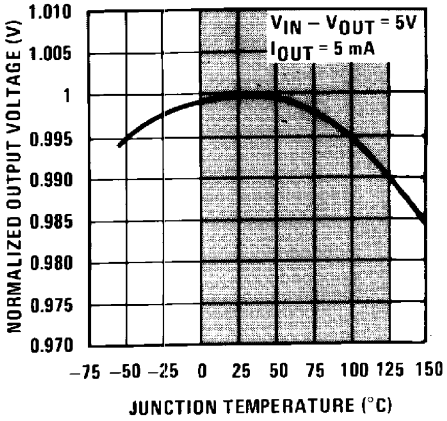


Figure 6.

**Ripple Rejection**

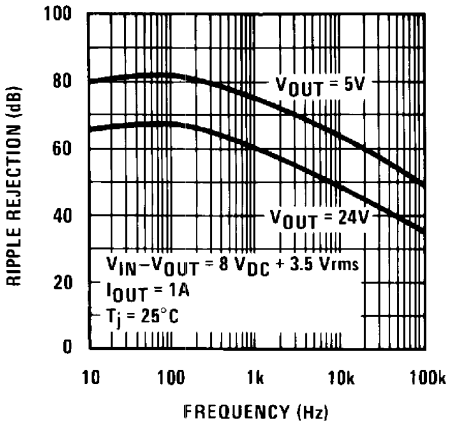


Figure 7.

**Ripple Rejection**

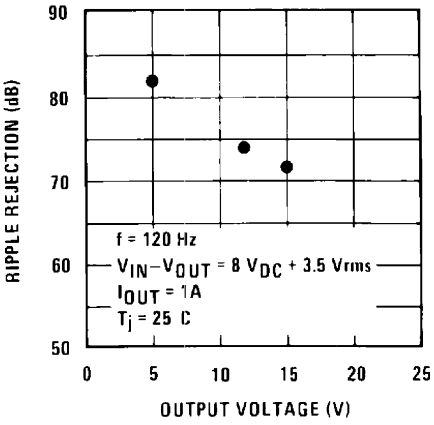


Figure 8.

**Output Impedance**

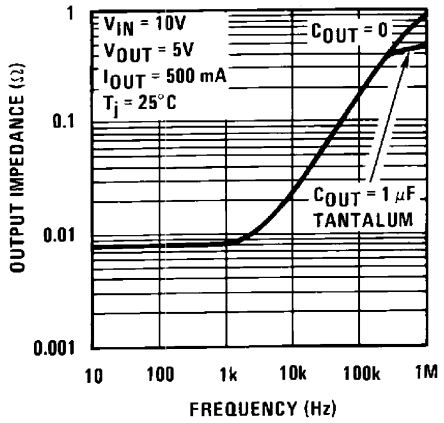


Figure 9.

**Dropout Characteristics**

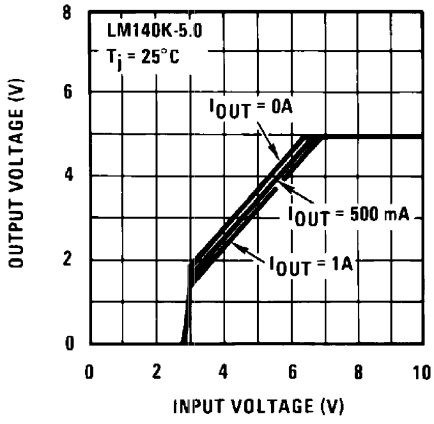


Figure 10.


Copyright © 2013, Texas Instruments Incorporated

## Typical Performance Characteristics (continued)

**Quiescent Current**

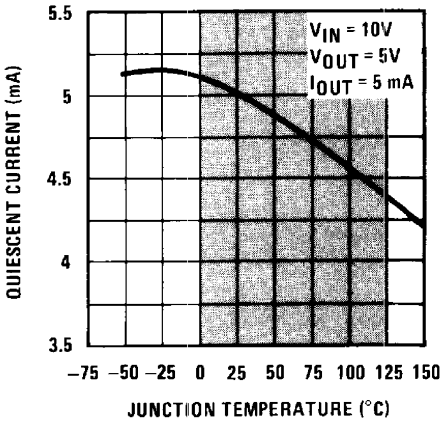


Figure 11.

**Peak Output Current**

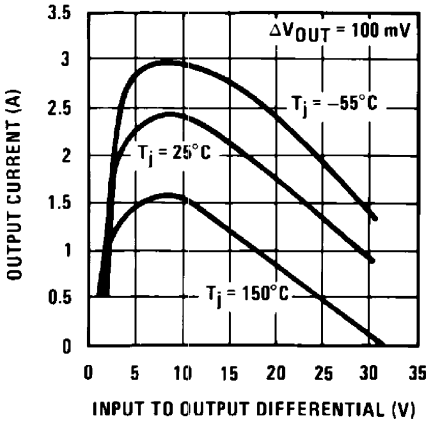


Figure 12.

**Dropout Voltage**

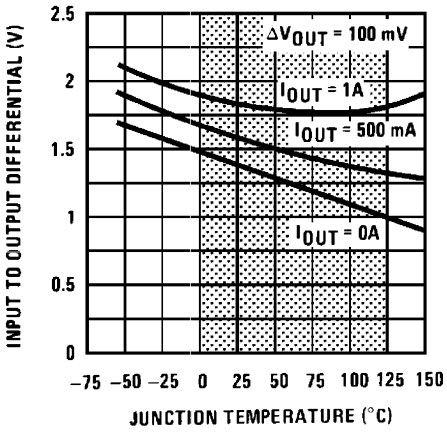


Figure 13.

**Quiescent Current**

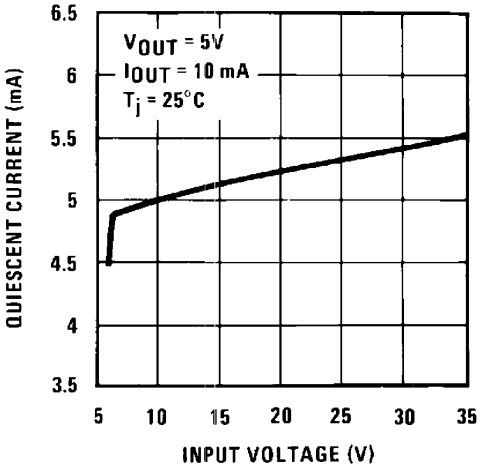


Figure 14.

**Line Regulation**
**140K, $I_{OUT}$ = 1A, $T_A$ = 25°C**

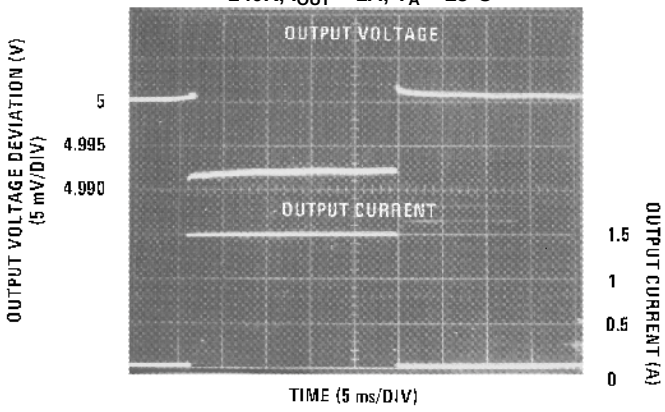


Figure 15.

**Line Regulation**
**140K, $V_{IN}$ = 10V, $T_A$ = 25°C**

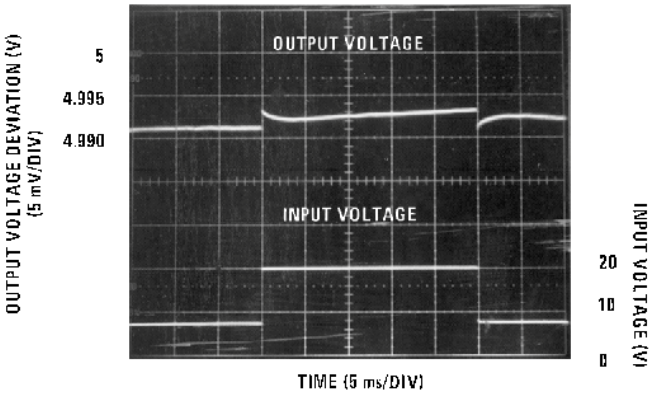


Figure 16.

Copyright © 2013, Texas Instruments Incorporated

## Equivalent Schematic

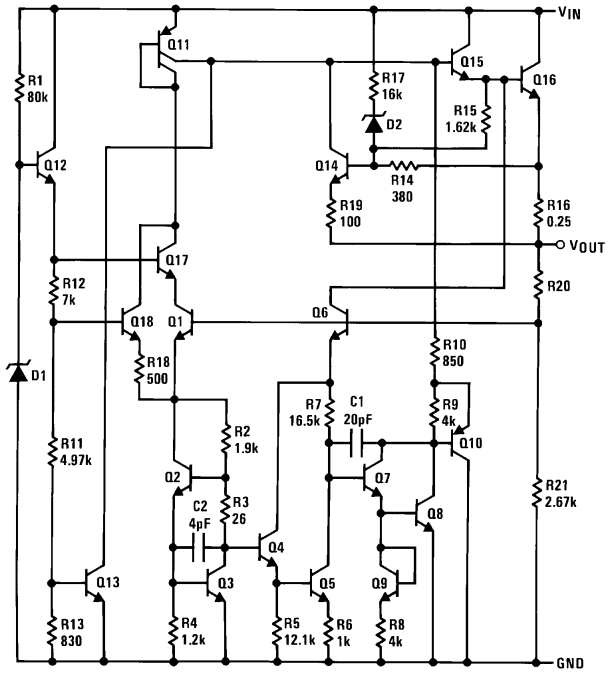



Copyright © 2013, Texas Instruments Incorporated

## APPLICATION HINTS

The LM140K is designed with thermal protection, output short-circuit protection and output transistor safe area protection. However, as with *any* IC regulator, it becomes necessary to take precautions to assure that the regulator is not inadvertently damaged. The following describes possible misapplications and methods to prevent damage to the regulator.

## SHORTING THE REGULATOR INPUT

When using large capacitors at the output of these regulators, a protection diode connected input to output (Figure 17) may be required if the input is shorted to ground. Without the protection diode, an input short will cause the input to rapidly approach ground potential, while the output remains near the initial $V_{OUT}$because of the stored charge in the large output capacitor. The capacitor will then discharge through a large internal input to output diode and parasitic transistors. If the energy released by the capacitor is large enough, this diode, low current metal and the regulator will be destroyed. The fast diode in Figure 17 will shunt most of the capacitors discharge current around the regulator. Generally no protection diode is required for values of output capacitance ≤ 10 µF.

## RAISING THE OUTPUT VOLTAGE ABOVE THE INPUT VOLTAGE

Since the output of the device does not sink current, forcing the output high can cause damage to internal low current paths in a manner similar to that just described in the “Shorting the Regulator Input” section.

## REGULATOR FLOATING GROUND (Figure 18)

When the ground pin alone becomes disconnected, the output approaches the unregulated input, causing possible damage to other circuits connected to $V_{OUT}$. If ground is reconnected with power “ON”, damage may also occur to the regulator. This fault is most likely to occur when plugging in regulators or modules with on card regulators into powered up sockets. Power should be turned off first, thermal limit ceases operating, or ground should be connected first if power must be left on.

## TRANSIENT VOLTAGES

If transients exceed the maximum rated input voltage of the device, or reach more than 0.8V below ground and have sufficient energy, they will damage the regulator. The solution is to use a large input capacitor, a series input breakdown diode, a choke, a transient suppressor or a combination of these.

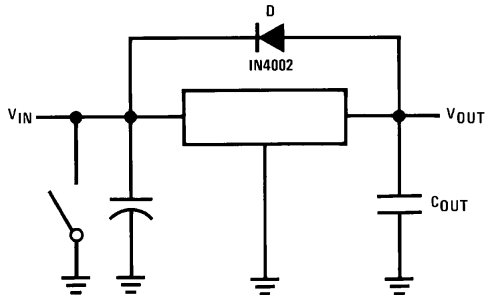


**Figure 17. Input Short**

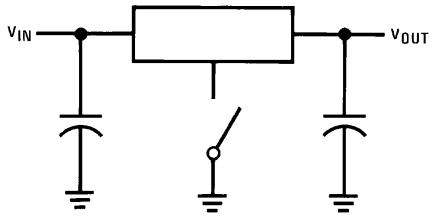


**Figure 18. Regulator Floating Ground**

Copyright © 2013, Texas Instruments Incorporated

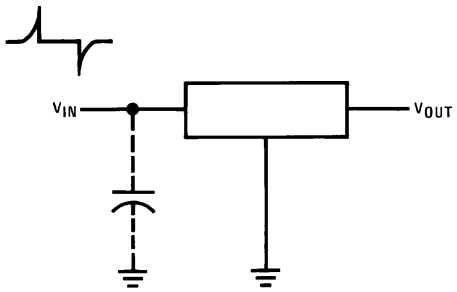


**Figure 19. Transients**

When a value for $\theta_{(H-A)}$ is found using the equation shown, a heatsink must be selected that has *a value that is less than or equal to this number.*

$\theta_{(H-A)}$ is specified numerically by the heatsink manufacturer in this catalog, or shown in a curve that plots temperature rise vs power dissipation for the heatsink.

## Typical Applications

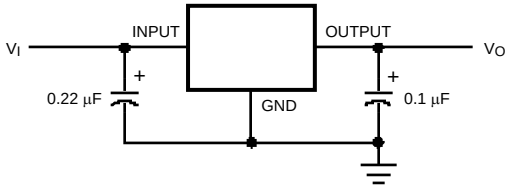


Bypass capacitors are recommended for optimum stability and transient response, and should be located as close as possible to the regulator.

**Figure 20. Fixed Output Regulator**

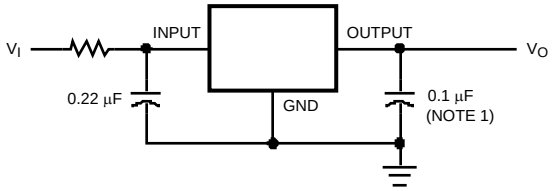



Copyright © 2013, Texas Instruments Incorporated

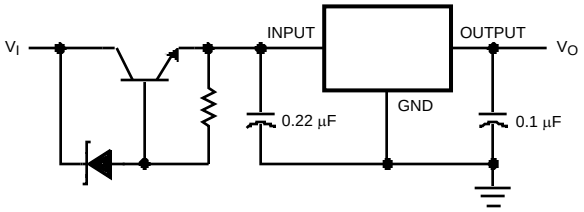


**Figure 21. High Input Voltage Circuits**

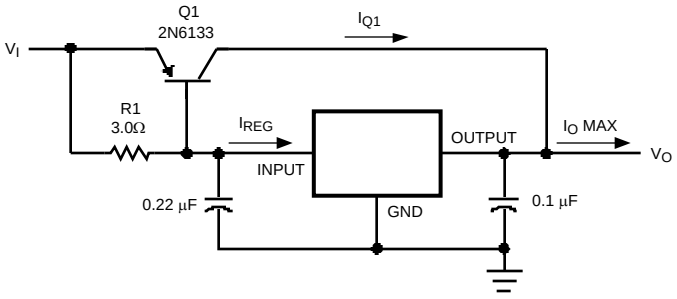


$$\beta(Q1) \geq \frac{I_{O\ Max}}{I_{REG\ Max}}$$

$$R1 = \frac{0.9}{I_{REG}} = \frac{\beta(Q1)\ V_{BE(Q1)}}{I_{REG\ Max}\ (\beta + 1) - I_{O\ Max}}$$

**Figure 22. High Current Voltage Regulator**

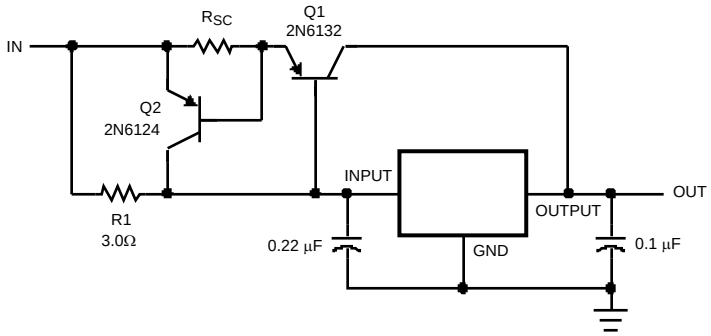


$$R_{SC} = \frac{0.8}{I_{SC}}$$

$$R1 = \frac{\beta V_{BE(Q1)}}{I_{REG\ Max}\ (\beta + 1) - I_{O\ Max}}$$

**Figure 23. High Output Current, Short Circuit Protected**

Copyright © 2013, Texas Instruments Incorporated

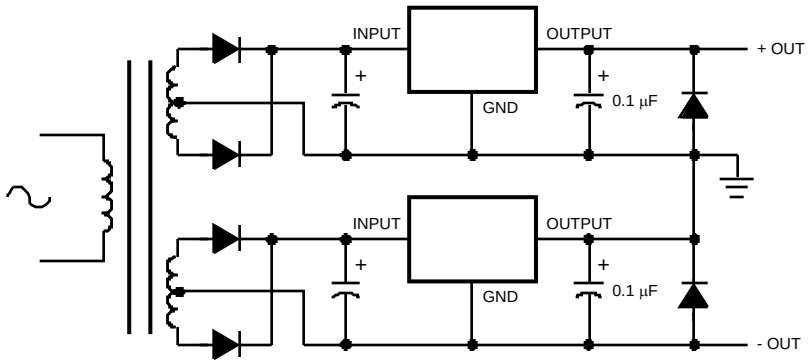


**Figure 24. Positive and Negative Regulator**


Copyright © 2013, Texas Instruments Incorporated

## PACKAGING INFORMATION

| Orderable Device | Status (1) | Package Type | Package Drawing | Pins | Package Qty | Eco Plan (2) | Lead finish/ Ball material (6) | MSL Peak Temp (3) | Op Temp (°C) | Device Marking (4/5) | Samples |
|---|---|---|---|---|---|---|---|---|---|---|---|
| LM140K-12 | ACTIVE | TO-3 | NDS | 2 | 50 | Non-RoHS & Non-Green | Call TI | Call TI | -55 to 125 | LM140K 12P+ | Samples |
| LM140K-12/NOPB | ACTIVE | TO-3 | NDS | 2 | 50 | RoHS & Green | Call TI | Level-1-NA-UNLIM | -55 to 125 | LM140K 12P+ | Samples |
| LM140K-15 | ACTIVE | TO-3 | NDS | 2 | 50 | Non-RoHS & Non-Green | Call TI | Call TI | -55 to 125 | LM140K 15P+ | Samples |
| LM140K-15/NOPB | ACTIVE | TO-3 | NDS | 2 | 50 | RoHS & Green | Call TI | Level-1-NA-UNLIM | -55 to 125 | LM140K 15P+ | Samples |
| LM140K-5.0 | ACTIVE | TO-3 | NDS | 2 | 50 | Non-RoHS & Non-Green | Call TI | Call TI | -55 to 125 | LM140K 5.0P+ | Samples |
| LM140K-5.0/NOPB | ACTIVE | TO-3 | NDS | 2 | 50 | RoHS & Green | Call TI | Level-1-NA-UNLIM | -55 to 125 | LM140K 5.0P+ | Samples |

(1) The marketing status values are defined as follows:
**ACTIVE:** Product device recommended for new designs.
**LIFEBUY:** TI has announced that the device will be discontinued, and a lifetime-buy period is in effect.
**NRND:** Not recommended for new designs. Device is in production to support existing customers, but TI does not recommend using this part in a new design.
**PREVIEW:** Device has been announced but is not in production. Samples may or may not be available.
**OBSOLETE:** TI has discontinued the production of the device.

(2) **RoHS:** TI defines "RoHS" to mean semiconductor products that are compliant with the current EU RoHS requirements for all 10 RoHS substances, including the requirement that RoHS substance do not exceed 0.1% by weight in homogeneous materials. Where designed to be soldered at high temperatures, "RoHS" products are suitable for use in specified lead-free processes. TI may reference these types of products as "Pb-Free".
**RoHS Exempt:** TI defines "RoHS Exempt" to mean products that contain lead but are compliant with EU RoHS pursuant to a specific EU RoHS exemption.
**Green:** TI defines "Green" to mean the content of Chlorine (Cl) and Bromine (Br) based flame retardants meet JS709B low halogen requirements of <=1000ppm threshold. Antimony trioxide based flame retardants must also meet the <=1000ppm threshold requirement.

(3) MSL, Peak Temp. - The Moisture Sensitivity Level rating according to the JEDEC industry standard classifications, and peak solder temperature.

(4) There may be additional marking, which relates to the logo, the lot trace code information, or the environmental category on the device.

(5) Multiple Device Markings will be inside parentheses. Only one Device Marking contained in parentheses and separated by a "~" will appear on a device. If a line is indented then it is a continuation of the previous line and the two combined represent the entire Device Marking for that device.

(6) Lead finish/Ball material - Orderable Devices may have multiple material finish options. Finish options are separated by a vertical ruled line. Lead finish/Ball material values may wrap to two lines if the finish value exceeds the maximum column width.

**Important Information and Disclaimer:**The information provided on this page represents TI's knowledge and belief as of the date that it is provided. TI bases its knowledge and belief on information provided by third parties, and makes no representation or warranty as to the accuracy of such information. Efforts are underway to better integrate information from third parties. TI has taken and continues to take reasonable steps to provide representative and accurate information but may not have conducted destructive testing or chemical analysis on incoming materials and chemicals. TI and TI suppliers consider certain information to be proprietary, and thus CAS numbers and other limited information may not be available for release.

In no event shall TI's liability arising out of such information exceed the total purchase price of the TI part(s) at issue in this document sold by TI to Customer on an annual basis.

NDS0002A

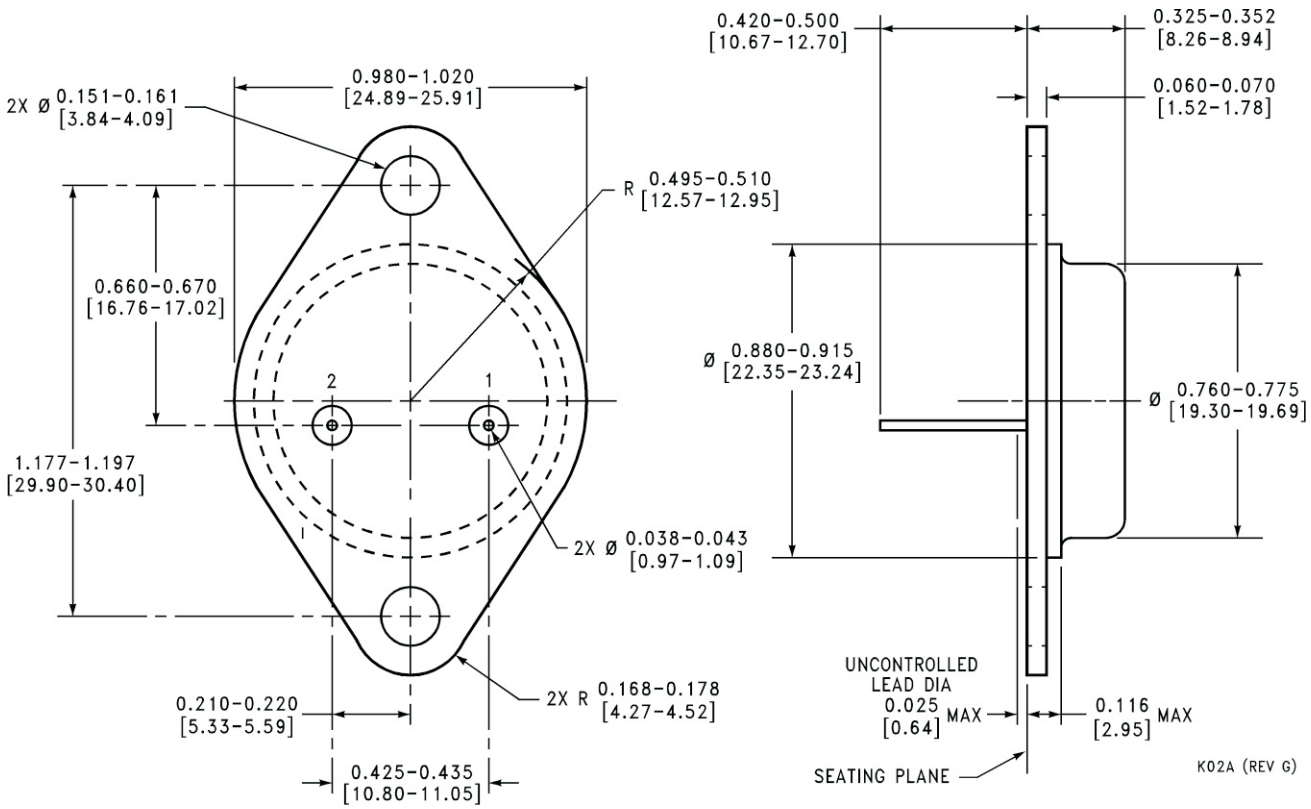
0.420-0.500
[10.67-12.70]
0.325-0.352
[8.26-8.94]
0.060-0.070
[1.52-1.78]
0.980-1.020
[24.89-25.91]
2X Ø 0.151-0.161
[3.84-4.09]
R 0.495-0.510
[12.57-12.95]
0.660-0.670
[16.76-17.02]
Ø 0.880-0.915
[22.35-23.24]
Ø 0.760-0.775
[19.30-19.69]
2
1
1.177-1.197
[29.90-30.40]
2X Ø 0.038-0.043
[0.97-1.09]
2X R 0.168-0.178
[4.27-4.52]
0.210-0.220
[5.33-5.59]
0.425-0.435
[10.80-11.05]
UNCONTROLLED
LEAD DIA
0.025
[0.64] MAX
0.116
[2.95] MAX
SEATING PLANE
K02A (REV G)

# 重要声明和免责声明

TI 均以“原样”提供技术性及可靠性数据（包括数据表）、设计资源（包括参考设计）、应用或其他设计建议、网络工具、安全信息和其他资源，不保证其中不含任何瑕疵，且不做任何明示或暗示的担保，包括但不限于对适销性、适合某特定用途或不侵犯任何第三方知识产权的暗示担保。

所述资源可供专业开发人员应用TI 产品进行设计使用。您将对以下行为独自承担全部责任：(1) 针对您的应用选择合适的TI 产品；(2) 设计、验证并测试您的应用；(3) 确保您的应用满足相应标准以及任何其他安全、安保或其他要求。所述资源如有变更，恕不另行通知。TI 对您使用所述资源的授权仅限于开发资源所涉及TI 产品的相关应用。除此之外不得复制或展示所述资源，也不提供其它TI或任何第三方的知识产权授权许可。如因使用所述资源而产生任何索赔、赔偿、成本、损失及债务等，TI对此概不负责，并且您须赔偿由此对TI 及其代表造成的损害。

TI 所提供产品均受TI 的销售条款 (http://www.ti.com.cn/zh-cn/legal/termsofsale.html) 以及ti.com.cn上或随附TI产品提供的其他可适用条款的约束。TI提供所述资源并不扩展或以其他方式更改TI 针对TI 产品所发布的可适用的担保范围或担保免责声明。

邮寄地址：上海市浦东新区世纪大道 1568 号中建大厦 32 楼，邮政编码：200122
Copyright © 2020 德州仪器半导体技术（上海）有限公司