# TPS61099x 静态电流极低的同步升压转换器

## 1 特性

- 600nA 超低 $I_Q$ 流入 $V_{OUT}$ 引脚
- 400nA 超低 $I_Q$ 流入 $V_{IN}$ 引脚
- 工作输入电压范围为 0.7V 至 5.5V
- 可调输出电压范围为 1.8V 至 5.5V
- 可提供固定输出电压版本
- 最小 0.8A 开关峰值电流限制
- 降压模式下提供稳压输出电压
- 关断期间真正断开连接
- 使用固定输出电压版本时，10μA 负载条件下的效率高达 75%
- 在 10mA 至 300mA 负载下具有高达 93% 的效率
- 6 焊球 1.23mm × 0.88mm WCSP 封装和 2mm × 2mm WSON 封装
- 使用 TPS61099x 并借助 WEBENCH® Power Designer 创建定制设计方案

## 2 应用

- 记忆 LCD 偏压
- 光学心率监测 LED 偏压
- 可穿戴应用
- 低功耗无线应用
- 便携式产品
- 电池供电型系统

## 3 说明

TPS61099x 器件是一款具有 1μA 超低静态电流的同步升压转换器。该器件专为由碱性电池、镍氢充电电池、锂锰电池或锂离子充电电池供电的产品而设计，能够在轻载条件下高效运行，这对延长电池使用寿命至关重要。

TPS61099x 升压转换器采用迟滞控制拓扑，能够以最小静态电流实现最高的效率。该器件在轻载条件下仅消耗 1μA 静态电流，在 10μA 负载下可实现高达 75% 的效率（固定输出电压版本）。此外，该器件在 3.3V 至 5V 转换过程中支持高达 300mA 的输出电流，在 200mA 负载条件下可实现高达 93% 的效率。

TPS61099x 还为不同应用提供降压模式和直通操作。在降压模式下，即使输入电压高于输出电压，输出电压仍可调节为目标值。在直通模式下，输出电压与输入电压保持一致。当 $V_{IN} > V_{OUT} + 0.5V$ 时，TPS61099x 退出降压模式并转入直通模式。

TPS61099x 在禁用状态下能够将负载与输入电源断开，真正实现关断，从而降低电流消耗。

TPS61099x 具有可调输出电压版本和固定输出电压版本。该器件采用 6 焊球 1.23mm × 0.88mm WCSP 封装和 6 焊球 2mm × 2mm WSON 封装。

器件信息

| 器件型号 | 封装(1) | 封装尺寸（标称值） |
|---|---|---|
| TPS61099 | WCSP (6) | 1.23mm × 0.88mm |
| TPS61099x | | |
| TPS61099 | WSON (6) | 2mm × 2mm |
| TPS61099x | | |

(1) 如需了解所有可用封装，请参阅本文档末尾的可订购产品附录。

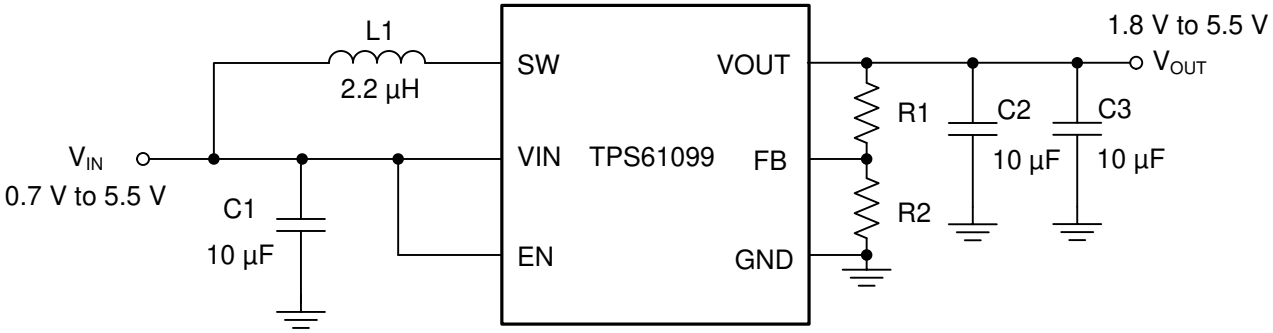


Copyright © 2016, Texas Instruments Incorporated

典型应用电路

本文档旨在为方便起见，提供有关 TI 产品中文版本的信息，以确认产品的概要。有关适用的官方英文版本的最新信息，请访问 www.ti.com，其内容始终优先。TI 不保证翻译的准确性和有效性。在实际设计之前，请务必参考最新版本的英文版本。

## Table of Contents

**1 特性**.... 1
**2 应用**.... 1
**3 说明**.... 1
**4 Revision History**.... 2
**5 Device Comparison Table**.... 3
**6 Pin Configuration and Functions**.... 3
**7 Specifications**.... 4
7.1 Absolute Maximum Ratings.... 4
7.2 ESD Ratings.... 4
7.3 Recommended Operating Conditions.... 4
7.4 Thermal Information.... 4
7.5 Electrical Characteristics.... 5
7.6 Typical Characteristics.... 7
**8 Detailed Description**.... 10
8.1 Overview.... 10
8.2 Functional Block Diagram.... 10
8.3 Feature Description.... 10
8.4 Device Functional Modes.... 13
**9 Application and Implementation**.... 14
9.1 Application Information.... 14
9.2 Typical Application - 5 V Output Boost Converter.... 14
**10 Power Supply Recommendations**.... 18
**11 Layout**.... 19
11.1 Layout Guidelines.... 19
11.2 Layout Example.... 19
**12 Device and Documentation Support**.... 21
12.1 Device Support.... 21
12.2 Documentation Support.... 21
12.3 接收文档更新通知.... 21
12.4 支持资源.... 21
12.5 Trademarks.... 22
12.6 Electrostatic Discharge Caution.... 22
12.7 术语表.... 22
**13 Mechanical, Packaging, and Orderable Information**.... 22

## 4 Revision History

注：以前版本的页码可能与当前版本的页码不同

| Changes from Revision K (May 2018) to Revision L (August 2021) | Page |
|---|---|
| • 更新了整个文档中的表格、图和交叉参考的编号格式 | 1 |

| Changes from Revision J (October 2017) to Revision K (May 2018) | Page |
|---|---|
| • Added Load Efficiency graph for TPS610995 device | 7 |


Copyright © 2021 Texas Instruments Incorporated

## 5 Device Comparison Table

| PART NUMBER | OUTPUT VOLTAGE |
|---|---|
| TPS61099 | Adjustable |
| TPS610997 | 5.0 V |
| TPS610996 | 4.5 V |
| TPS610995 | 3.6 V |
| TPS610994 | 3.3 V |
| TPS610993 | 3.0 V |
| TPS610992 | 2.5 V |
| TPS610991(1) | 1.8 V |

(1) Product Preview. Contact TI factory for more information.

## 6 Pin Configuration and Functions

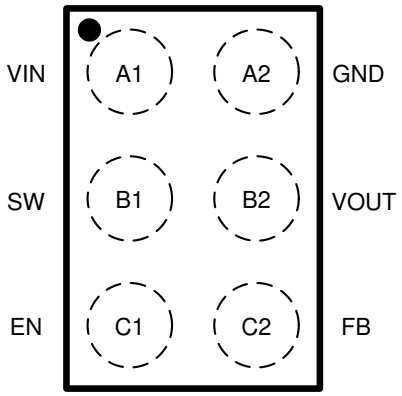


图 6-1. YFF Package 6-Pin YFF Top View

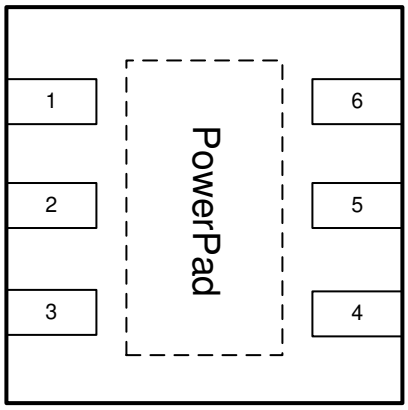


图 6-2. DRV Package 6-Pin DRV Top View

表 6-1. Pin Functions

| PIN | | | TYPE | DESCRIPTION |
|---|---|---|---|---|
| NAME | YFF | DRV | | |
| VIN | A1 | 6 | I | IC power supply input |
| SW | B1 | 5 | PWR | Switch pin of the converter. It is connected to the inductor |
| EN | C1 | 4 | I | Enable logic input. Logic high voltage enables the device; logic low voltage disables the device. Do not leave it floating. |
| GND | A2 | 1 | PWR | Ground |
| VOUT | B2 | 2 | PWR | Boost converter output |
| FB | C2 | 3 | I | Voltage feedback of adjustable output voltage. Connect to the center tap of a resistor divider to program the output voltage. Connect to GND pin for fixed output voltage versions. |
| PowerPad | | 7 | | Connect to GND |

Copyright © 2021 Texas Instruments Incorporated

# 7 Specifications

## 7.1 Absolute Maximum Ratings

over operating free-air temperature range (unless otherwise noted)[1]

| | | MIN | MAX | UNIT |
|---|---|---|---|---|
| Voltage range at terminals[2] | VIN, SW, VOUT, FB, EN | -0.3 | 6.0 | V |
| Operating junction temperature, $T_J$ | | – 40 | 150 | °C |
| Storage temperature range, $T_{stg}$ | | – 65 | 150 | °C |

(1) Stresses beyond those listed under *Absolute Maximum Ratings* may cause permanent damage to the device. These are stress ratings only, and functional operation of the device at these or any other conditions beyond those indicated under *Recommended Operating Conditions* is not implied. Exposure to absolute-maximum-rated conditions for extended periods may affect device reliability.
(2) All voltage values are with respect to network ground terminal.

## 7.2 ESD Ratings

| | | VALUE | UNIT |
|---|---|---|---|
| $V_{(ESD)}$ Electrostatic discharge | Human Body Model (HBM), per ANSI/ESDA/JEDEC JS-001, all pins[1] | ±2000 | V |
| | Charged Device Model (CDM), per JEDEC specification JESD22-C101, all pins[2] | ±500 | |

(1) JEDEC document JEP155 states that 500V HBM rating allows safe manufacturing with a standard ESD control process.
(2) JEDEC document JEP157 states that 250V CDM rating allows safe manufacturing with a standard ESD control process.

## 7.3 Recommended Operating Conditions

| | | MIN | NOM | MAX | UNIT |
|---|---|---|---|---|---|
| $V_{IN}$ | Input voltage range | 0.7 | | 5.5 | V |
| $V_{OUT}$ | Output voltage range | 1.8 | | 5.5 | V |
| L | Inductor | 0.7 | 2.2 | 2.86 | µH |
| $C_{IN}$ | Input capacitor | 1.0 | 10 | | µF |
| $C_{OUT}$ | Output capacitor | 10 | 20 | 100 | µF |
| $T_J$ | Operating virtual junction temperature | – 40 | | 125 | °C |

## 7.4 Thermal Information

| THERMAL METRIC[1] | | TPS61099 | | UNIT |
|---|---|---|---|---|
| | | YFF (6 BALLS, WCSP) | DRV(6 PINS, WSON) | |
| $R_{\theta JA}$ | Junction-to-ambient thermal resistance | 134.4 | 71.7 | °C/W |
| $R_{\theta JCtop}$ | Junction-to-case (top) thermal resistance | 0.9 | 83.0 | °C/W |
| $R_{\theta JB}$ | Junction-to-board thermal resistance | 36.1 | 33.9 | °C/W |
| $\psi_{JT}$ | Junction-to-top characterization parameter | 0.1 | 2.7 | °C/W |
| $\psi_{JB}$ | Junction-to-board characterization parameter | 36.2 | 33.4 | °C/W |
| $R_{\theta JCbot}$ | Junction-to-case (bottom) thermal resistance | N/A | 14.4 | °C/W |

(1) For more information about traditional and new thermal metrics, see the IC Package Thermal Metrics application report, SPRA953.


Copyright © 2021 Texas Instruments Incorporated

## 7.5 Electrical Characteristics

$T_J$ = -40°C to 125°C and $V_{IN}$ = 0.7 V to 5.5 V. Typical values are at $V_{IN}$ = 3.7 V, $T_J$ = 25°C, unless otherwise noted.

| PARAMETER | | Version | TEST CONDITIONS | MIN | TYP | MAX | UNIT |
|---|---|---|---|---|---|---|---|
| POWER SUPPLY | | | | | | | |
| $V_{IN}$ | Input voltage range | TPS61099x | | 0.7 | | 5.5 | V |
| $V_{UVLO}$ | Input under voltage lockout threshold | TPS61099x | $V_{IN}$ rising | | 0.6 | 0.7 | V |
| | UVLO hysteresis | TPS61099x | | | 200 | | mV |
| $I_Q$ | Quiescent current into VIN pin | TPS61099x | IC enabled, no Load, no Switching<br>$T_J$ = -40 °C to 85 °C | | 0.4 | 1.1 | µA |
| | Quiescent current into VOUT pin | TPS61099x | IC enabled, no Load, no Switching, Boost or Down Mode<br>$T_J$ = -40 °C to 85 °C | | 0.6 | 1.5 | µA |
| $I_{SD}$ | Shutdown current into VIN pin | TPS61099x | IC disabled, $V_{IN}$ = 3.7 V, $V_{OUT}$ = 0 V<br>$T_J$ = -40 °C to 85 °C | | 0.5 | 1.6 | µA |
| OUTPUT | | | | | | | |
| $V_{OUT}$ | Output voltage range | TPS61099 | | 1.8 | | 5.5 | V |
| | Output accuracy | TPS610997 | VIN < VOUT, PWM mode | 4.90 | 5.00 | 5.10 | V |
| | | | VIN < VOUT, PFM mode | | 5.15 | | V |
| | | TPS610994 | VIN < VOUT, PWM mode | 3.23 | 3.30 | 3.37 | |
| | | | VIN < VOUT, PFM mode | | 3.4 | | |
| | | TPS610993 | VIN < VOUT, PWM mode | 2.94 | 3.0 | 3.06 | V |
| | | | VIN < VOUT, PFM mode | | 3.1 | | |
| | | TPS610996 | VIN < VOUT, PWM mode | 4.4 | 4.5 | 4.6 | V |
| | | | VIN < VOUT, PFM mode | | 4.63 | | |
| | | TPS610992 | VIN < VOUT, PWM mode | 2.45 | 2.5 | 2.55 | V |
| | | | VIN < VOUT, PFM mode | | 2.58 | | |
| | | TPS610995 | VIN < VOUT, PWM mode | 3.53 | 3.6 | 3.67 | V |
| | | | VIN < VOUT, PFM mode | | 3.71 | | |
| $V_{REF}$ | Feedback reference voltage | TPS61099 | $V_{IN}$ < $V_{OUT}$, PWM mode | 0.98 | 1.00 | 1.02 | V |
| | | TPS61099 | $V_{IN}$ < $V_{OUT}$, PFM mode | | 1.03 | | V |
| $V_{OVP}$ | Output overvoltage protection threshold | TPS61099x | $V_{OUT}$ rising | 5.6 | 5.8 | 6.0 | V |
| | OVP hysteresis | TPS61099x | | | 100 | 200 | mV |
| $I_{FB_LKG}$ | Leakage current into FB pin | TPS61099x | $V_{FB}$ = 1.0 V | | 10 | 50 | nA |
| POWER SWITCH | | | | | | | |
| $R_{DS(on)_LS}$ | Low side switch on resistance | TPS61099x | $V_{OUT}$ = 5.0 V | | 250 | | mΩ |
| | | | $V_{OUT}$ = 3.3 V | | 300 | | mΩ |
| | | | $V_{OUT}$ = 1.8 V | | 400 | | mΩ |
| $R_{DS(on)_HS}$ | Rectifier on resistance | TPS61099x | $V_{OUT}$ = 5.0 V | | 300 | 350 | mΩ |
| | | | $V_{OUT}$ = 3.3 V | | 350 | 450 | mΩ |
| | | | $V_{OUT}$ = 1.8 V | | 500 | 750 | mΩ |
| $I_{LH}$ | Inductor current ripple | TPS61099x | $V_{OUT}$ = 5.0 V | | 350 | | mA |
| | | | $V_{OUT}$ = 3.3 V | | 300 | | mA |
| | | | $V_{OUT}$ = 1.8 V | | 250 | | mA |
| $I_{LIM}$ | Current limit threshold | TPS61099x | $V_{OUT}$ ⩾ 2.5 V, boost operation | 0.8 | 1 | 1.25 | A |
| | | | $V_{OUT}$ < 2.5 V, boost operation | 0.5 | 0.75 | | A |
| $I_{SW_LKG}$ | Leakage current into SW pin (from SW pin to GND) | TPS61099x | $V_{SW}$ = 5.0 V, no switch, $T_J$ = -40 °C to 85 °C | | | 200 | nA |

## 7.5 Electrical Characteristics (continued)

$T_J$ = -40°C to 125°C and $V_{IN}$ = 0.7 V to 5.5 V. Typical values are at $V_{IN}$ = 3.7 V, $T_J$ = 25°C, unless otherwise noted.

| PARAMETER | | Version | TEST CONDITIONS | MIN | TYP | MAX | UNIT |
|---|---|---|---|---|---|---|---|
| CONTROL LOGIC | | | | | | | |
| $V_{IL}$ | EN input low voltage threshold | TPS61099x | $V_{IN} \leqslant$ 1.5 V | 0.2 x VIN | | | V |
| $V_{IH}$ | EN input high voltage threshold | TPS61099x | $V_{IN} \leqslant$ 1.5 V | | | 0.8 x VIN | V |
| $V_{IL}$ | EN input low voltage threshold | TPS61099x | $V_{IN}$ > 1.5 V | 0.4 | | | V |
| $V_{IH}$ | EN input high voltage threshold | TPS61099x | $V_{IN}$ > 1.5 V | | | 1.2 | V |
| $I_{EN_LKG}$ | Leakage current into EN pin | TPS61099x | $V_{EN}$ = 5.0 V | | | 50 | nA |
| | Overtemperature protection | TPS61099x | | | 150 | | °C |
| | Overtemperature hysteresis | TPS61099x | | | 25 | | °C |


Copyright © 2021 Texas Instruments Incorporated

## 7.6 Typical Characteristics

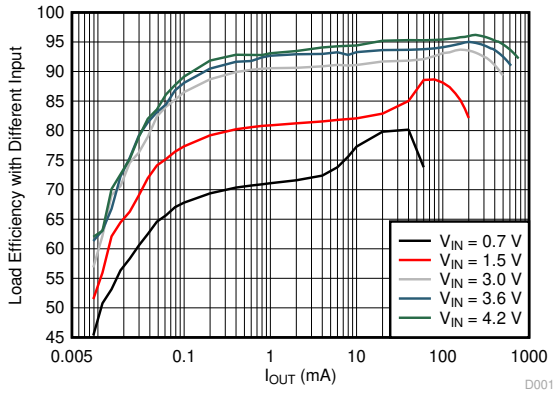


TPS61099, $V_{IN}$ = 0.7 V, 1.5 V, 3.0 V, 3.6 V, 4.2 V, $V_{OUT}$ = 5.0 V

**图 7-1. TPS61099 Load Efficiency with Different Inputs**

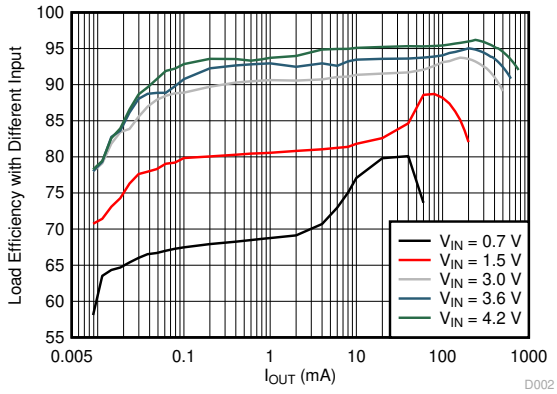


TPS610997, $V_{IN}$= 0.7 V, 1.5 V, 3.0 V, 3.6 V, 4.2 V

**图 7-2. TPS610997 Load Efficiency with Different Inputs**

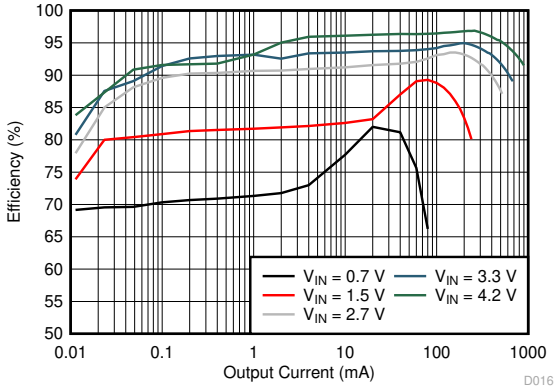


TPS610996, $V_{IN}$= 0.7 V, 1.5 V, 2.7, 3.3 V, 4.2 V

**图 7-3. TPS610996 Load Efficiency with Different Inputs**

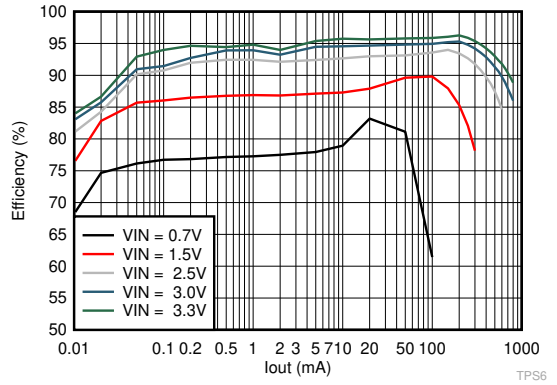


TPS610995, $V_{IN}$= 0.7 V, 1.5 V, 2.0, 3.0 V, 3.3 V

**图 7-4. TPS610995 Load Efficiency with Different Inputs**

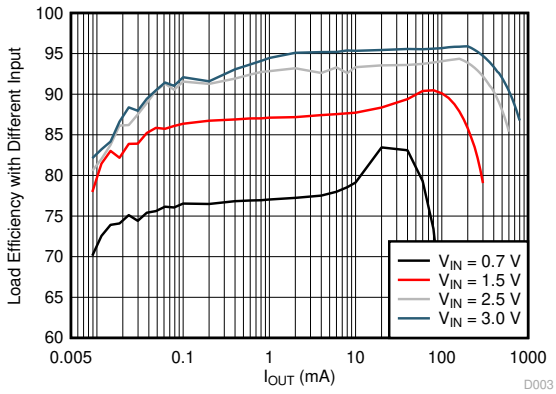


TPS610994, $V_{IN}$= 0.7 V, 1.5 V, 2.5 V, 3.0 V

**图 7-5. TPS610994 Load Efficiency with Different Inputs**

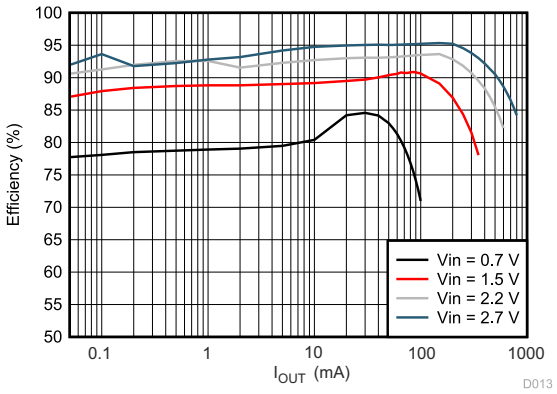


TPS610993, $V_{IN}$= 0.7 V, 1.5 V, 2.2 V, 2.5 V

**图 7-6. TPS610993 Load Efficiency with Different Inputs**

## 7.6 Typical Characteristics (continued)

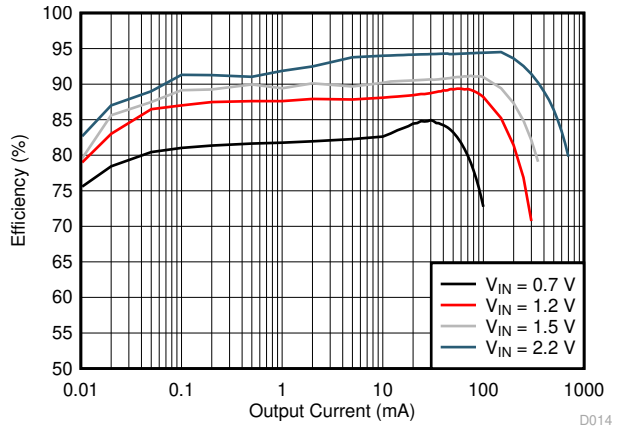


TPS610992, $V_{IN}$= 0.7 V, 1.2 V, 1.5 V, 2.2 V

**图 7-7. TPS610992 Load Efficiency with Different Inputs**

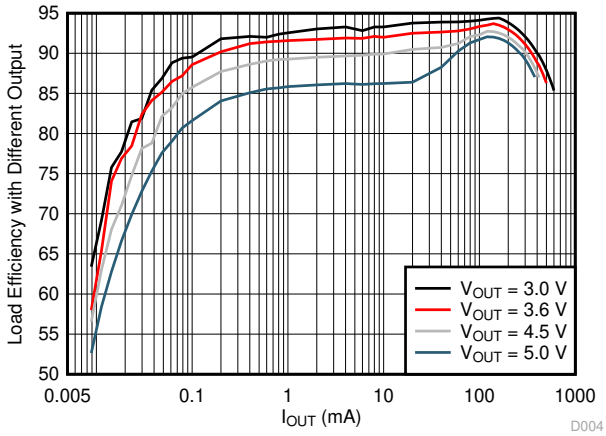


TPS61099, $V_{IN}$ = 2.4 V, $V_{OUT}$ = 3.0 V, 3.6 V, 4.5 V, 5.0 V

**图 7-8. Load Efficiency with Different Outputs**

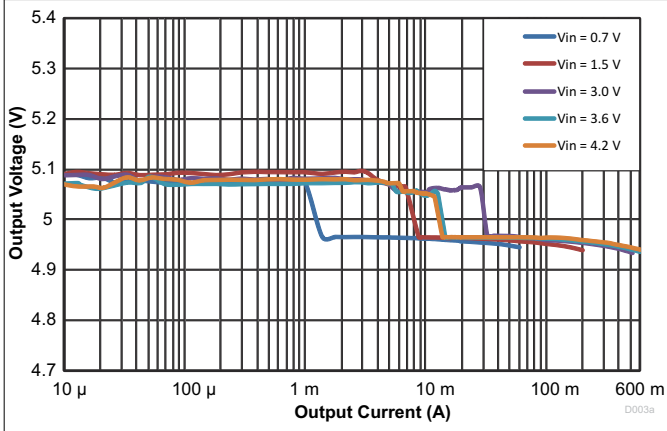


TPS61099, $V_{IN}$ = 0.7 V, 1.5 V, 3.0 V, 3.6 V, 4.2 V, $V_{OUT}$ = 5.0 V

**图 7-9. Load Regulation**

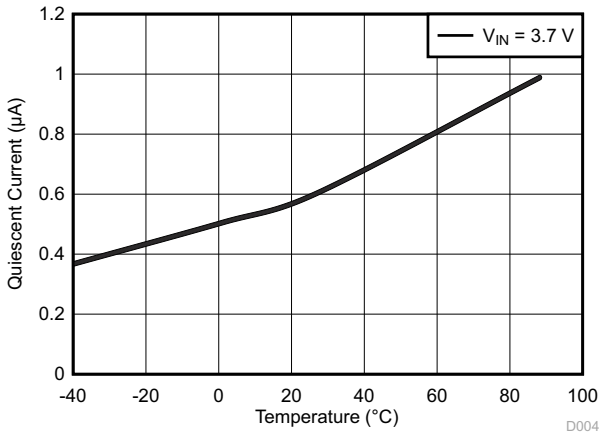


$V_{IN}$ = 3.7 V No Switching

**图 7-10. Quiescent Current into $V_{OUT}$ vs Temperature**

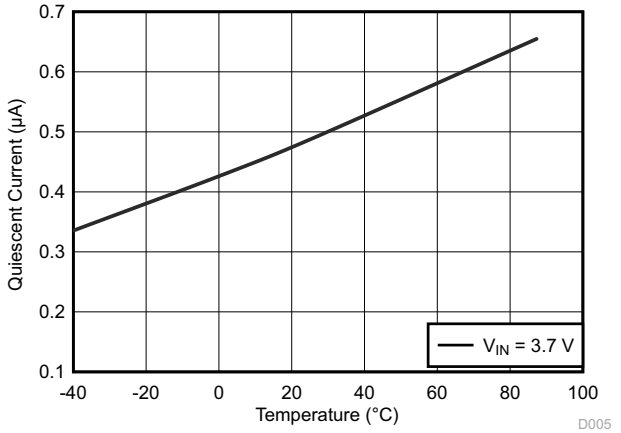


$V_{IN}$ = 3.7 V No Switching

**图 7-11. Quiescent Current into $V_{IN}$ vs Temperature**

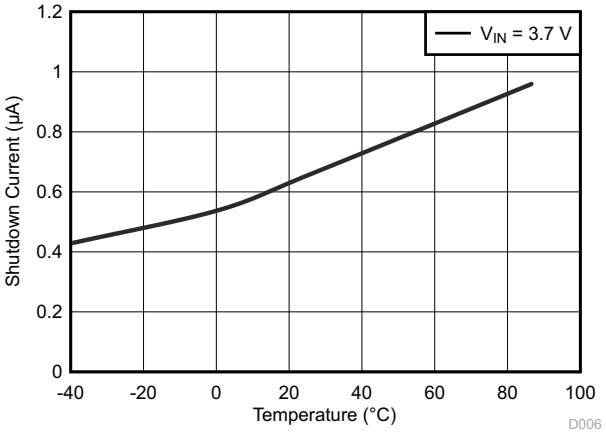


$V_{IN}$ = 3.7 V, Into $V_{IN}$ and SW

**图 7-12. Shutdown Current vs Temperature**


Copyright © 2021 Texas Instruments Incorporated

## 7.6 Typical Characteristics (continued)

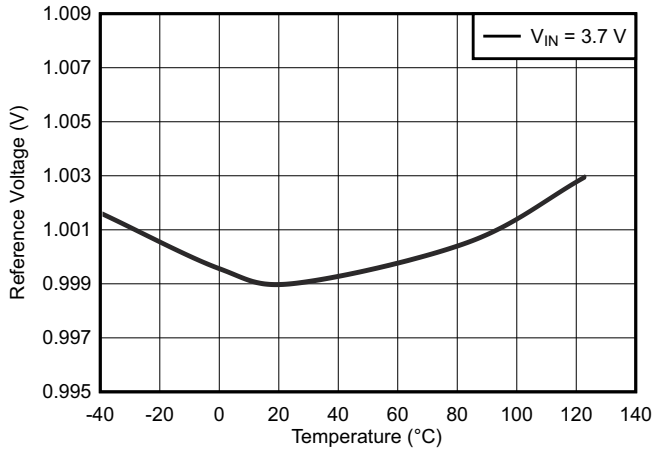


TPS61099, $V_{IN}$ = 3.7 V $T_J$ = –40°C to 125°C

**图 7-13. Reference Voltage vs Temperature**

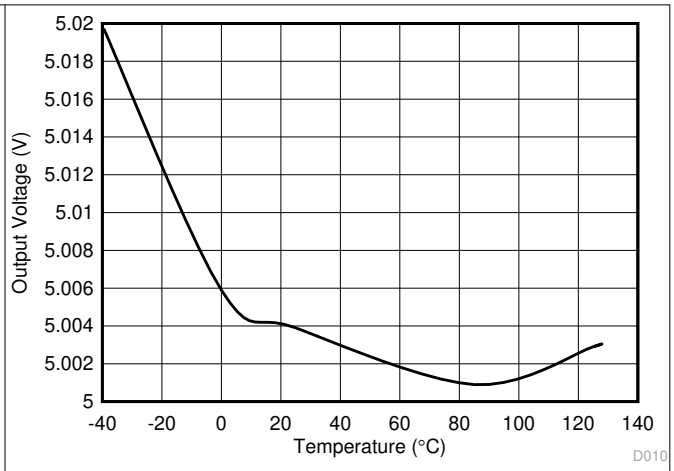


TPS610997, $V_{IN}$= 3.7 V, $T_J$ = –40°C to 125°C

**图 7-14. Output Voltage vs Temperature**

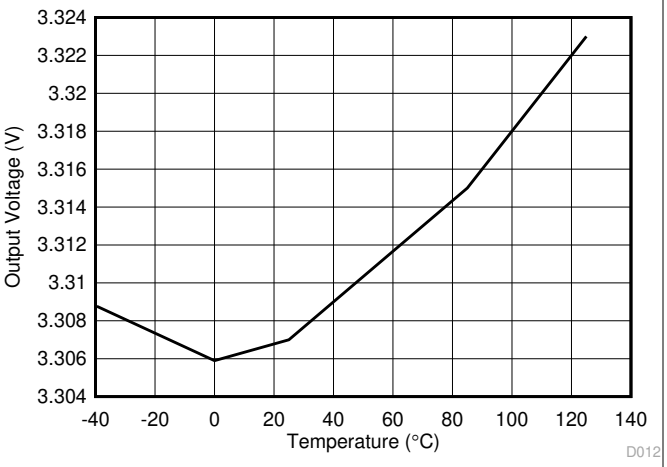


TPS610994, $V_{IN}$= 2.5 V, $T_J$ = –40°C to 125°C

**图 7-15. TPS610994 Output Voltage vs Temperature**

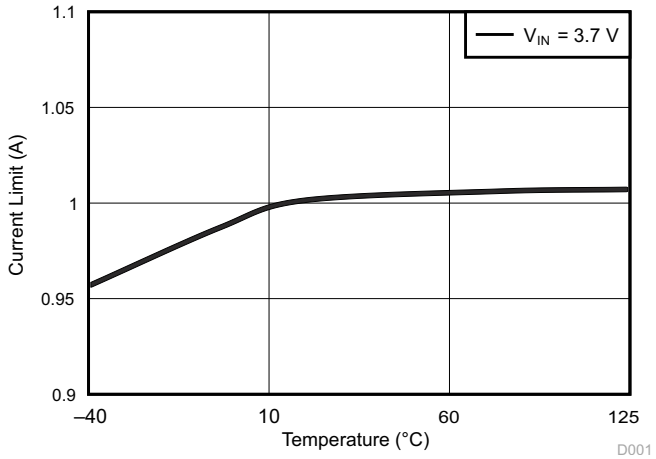


$V_{IN}$ = 3.7 V $T_J$ = –40°C to 125°C

**图 7-16. Current Limit vs Temperature**

# 8 Detailed Description

## 8.1 Overview

The TPS61099x synchronous step-up converter is designed for alkaline battery, coin-cell battery, Li-ion or Li-polymer battery powered systems, which requires long battery running time and tiny solution size. The TPS61099x can operate with a wide input voltage from 0.7 V to 5.5 V. It only consumes 1 μA quiescent current and can achieve high efficiency under light load condition.

The TPS61099x operates in a hysteretic control scheme with typical 1-A peak switch current limit. The TPS61099x provides the true shutdown function and the load is completely disconnected from the input so as to minimize the leakage current. It also adopts Down Mode and Pass-Through operation when input voltage is close to or higher than the regulated output voltage. The TPS61099x family is available in both adjustable and fixed output voltage versions. Adjustable version offers programmable output voltage for flexible applications while fixed versions offer minimal solution size and achieve up to 75% high efficiency under 10-μA load.

## 8.2 Functional Block Diagram

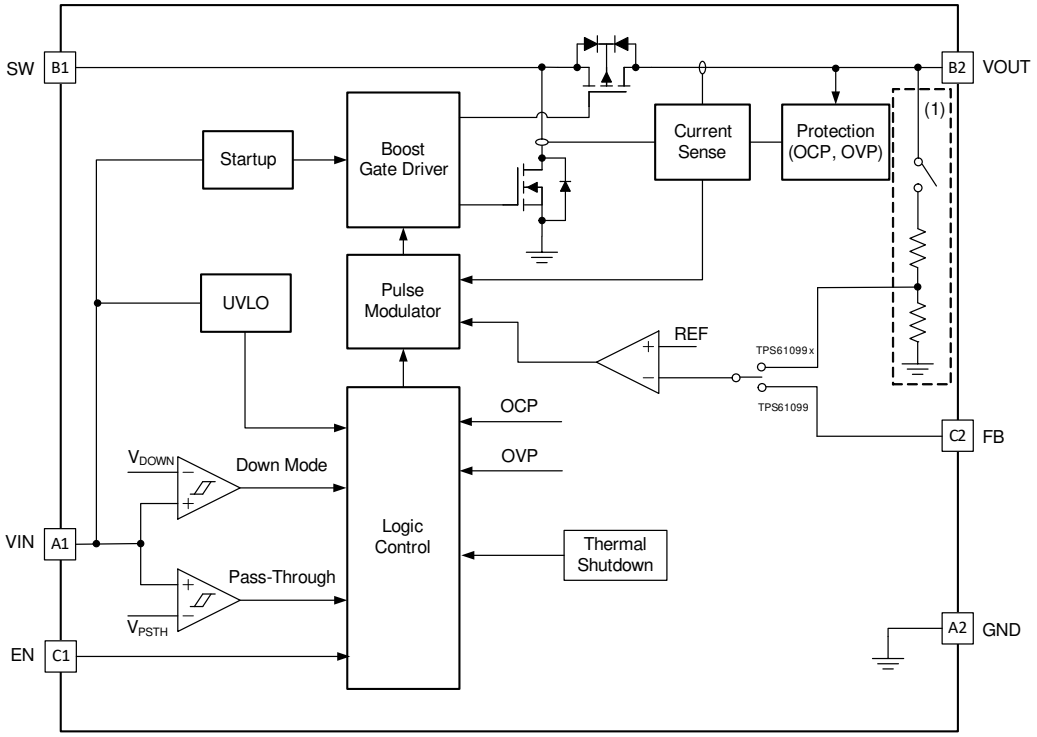


A. Internal FB resistor divider is implemented in fixed output voltage versions.

**图 8-1. Functional Block Diagram**

## 8.3 Feature Description

### 8.3.1 Boost Controller Operation

The TPS61099x boost converter is controlled by a hysteretic current mode controller. This controller regulates the output voltage by keeping the inductor ripple current constant in the range of 300 mA and adjusting the offset of this inductor current depending on the output load. Since the input voltage, output voltage and inductor value all affect the rising and falling slopes of inductor ripple current, the switching frequency is not fixed and is determined by the operation condition. If the required average input current is lower than the average inductor current defined by this constant ripple, the inductor current goes discontinuously to keep the efficiency high under light load condition. 图 8-2 illustrates the hysteretic current operation. If the load current is reduced further, the boost converter enters into Burst mode. In Burst mode, the boost converter ramps up the output voltage with several switching cycles. Once the output voltage exceeds a setting threshold, the device stops switching and


Copyright © 2021 Texas Instruments Incorporated

goes into a sleep status. In sleep status, the device consumes less quiescent current. It resumes switching when the output voltage is below the setting threshold. It exits the Burst mode when the output current can no longer be supported in this mode. Refer to 图 8-3 for Burst mode operation details.

To achieve high efficiency, the power stage is realized as a synchronous boost topology. The output voltage $V_{OUT}$ is monitored via an external or internal feedback network which is connected to the voltage error amplifier. To regulate the output voltage, the voltage error amplifier compares this feedback voltage to the internal voltage reference and adjusts the required offset of the inductor current accordingly.

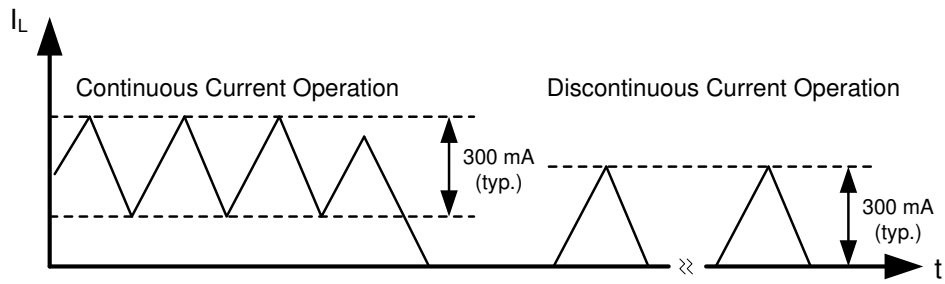


**图 8-2. Hysteretic Current Operation**

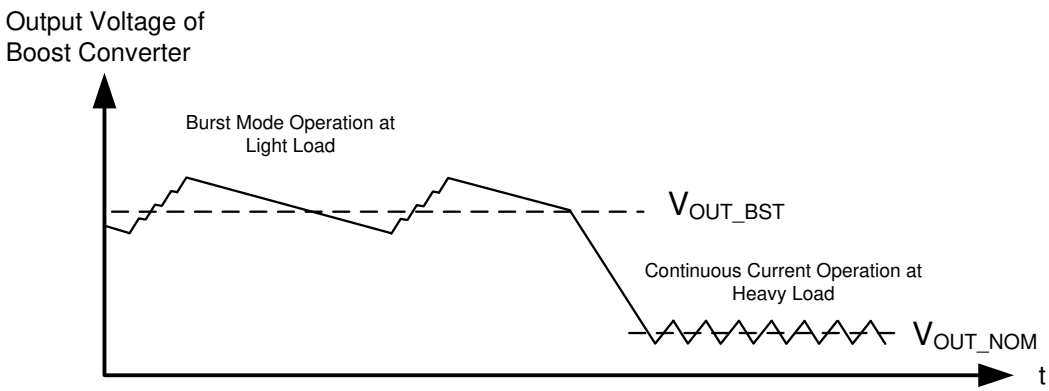


**图 8-3. Burst Mode Operation**

### 8.3.2 Under-Voltage Lockout

An under-voltage lockout (UVLO) circuit stops the operation of the converter when the input voltage drops below the typical UVLO threshold of 0.4 V. A hysteresis of 200 mV is added so that the device cannot be enabled again until the input voltage goes up to 0.6 V. This function is implemented in order to prevent malfunctioning of the device when the input voltage is between 0.4 V and 0.6 V.

### 8.3.3 Enable and Disable

When the input voltage is above UVLO rising threshold and the EN pin is pulled to high voltage, the TPS61099x is enabled. When the EN pin is pulled to low voltage, the TPS61099x goes into shutdown mode. In shutdown mode, the device stops switching and the rectifying PMOS fully turns off, providing the completed disconnection between input and output. Less than 0.5-µA input current is consumed in shutdown mode.

### 8.3.4 Soft Start

After the EN pin is tied to high voltage, the TPS61099x begins to startup. At the beginning, the device operates at the boundary of Discontinuous Conduction Mode (DCM) and Continuous Conduction Mode (CCM), and the inductor peak current is limited to around 200 mA during this stage. When the output voltage is charged above approximately 1.6 V, the device starts the hysteretic current mode operation. The current limit threshold is gradually increasing to 0.7× $I_{LIM}$ within 500 µs. In this way, the soft start function reduces the inrush current during startup. After $V_{OUT}$ reaches the target value, soft start stage ends and the peak current is now determined by the output of an internal error amplifier which compares the feedback of the output voltage and the internal reference voltage.

Copyright © 2021 Texas Instruments Incorporated

The TPS61099x is able to start up with 0.7-V input voltage with larger than 3-kΩ load. However, if the load during startup is so heavy that the TPS61099x fails to charge the output voltage above 1.6 V, the TPS61099x can't start up successfully until the input voltage is increased or the load current is reduced. The startup time depends on input voltage and load current.

### 8.3.5 Current Limit Operation

The TPS61099x employs cycle-by-cycle over-current protection (OCP) function. If the inductor peak current reaches the current limit threshold $I_{LIM}$, the main switch turns off so as to stop further increase of the input current. In this case the output voltage will decrease until the power balance between input and output is achieved. If the output drops below the input voltage, the TPS61099x enters into Down Mode. The peak current is still limited by $I_{LIM}$ cycle-by-cycle in Down Mode. If the output drops below 1.6 V, the TPS61099 enters into startup process again. In Pass-Through operation, current limit function is not enabled.

### 8.3.6 Output Short-to-Ground Protection

The TPS61099x starts to limit the switch current to 200 mA when the output voltage is below 1.6 V. If short-to-ground condition occurs, switch current is limited at 200 mA. Once the short circuit is released, the TPS61099x goes back to soft start again and regulates the output voltage.

### 8.3.7 Over Voltage Protection

TPS61099x has an output over-voltage protection (OVP) to protect the device in case that the external feedback resistor divider is wrongly populated. When the output voltage of the TPS61099 exceeds the OVP threshold of 5.8 V, the device stops switching. Once the output voltage falls 0.1 V below the OVP threshold, the device starts operating again.

### 8.3.8 Down Mode Regulation and Pass-Through Operation

The TPS61099x features Down Mode and Pass-Through operation when input voltage is close to or higher than output voltage.

In the Down Mode, output voltage is regulated at target value even when $V_{IN} > V_{OUT}$. The control circuit changes the behavior of the rectifying PMOS by pulling its gate to input voltage instead of to ground. In this way, the voltage drop across the PMOS is increasing as high as to regulate the output voltage. The power loss also increases in this mode, which needs to be taken into account for thermal consideration.

In the Pass-Through operation, the boost converter stops switching. The rectifying PMOS constantly turns on and low side switch constantly turns off. The output voltage is the input voltage minus the voltage drop across the dc resistance (DCR) of the inductor and the on-resistance of the rectifying PMOS.

With $V_{IN}$ ramping up, the TPS61099x goes into Down Mode first when $V_{IN} > V_{OUT}$ – 50mV. It stays in Down Mode until $V_{IN} > V_{OUT}$ + 0.5 V and then goes automatically into Pass-Through operation. In the Pass-Through operation, output voltage follows input voltage. The TPS61099x exits Pass-Through Mode and goes back to Down Mode when $V_{IN}$ ramps down to 103% of the target output voltage. It stays in Down Mode until input voltage falls 100mV below the output voltage, returning to Boost operation.


Copyright © 2021 Texas Instruments Incorporated

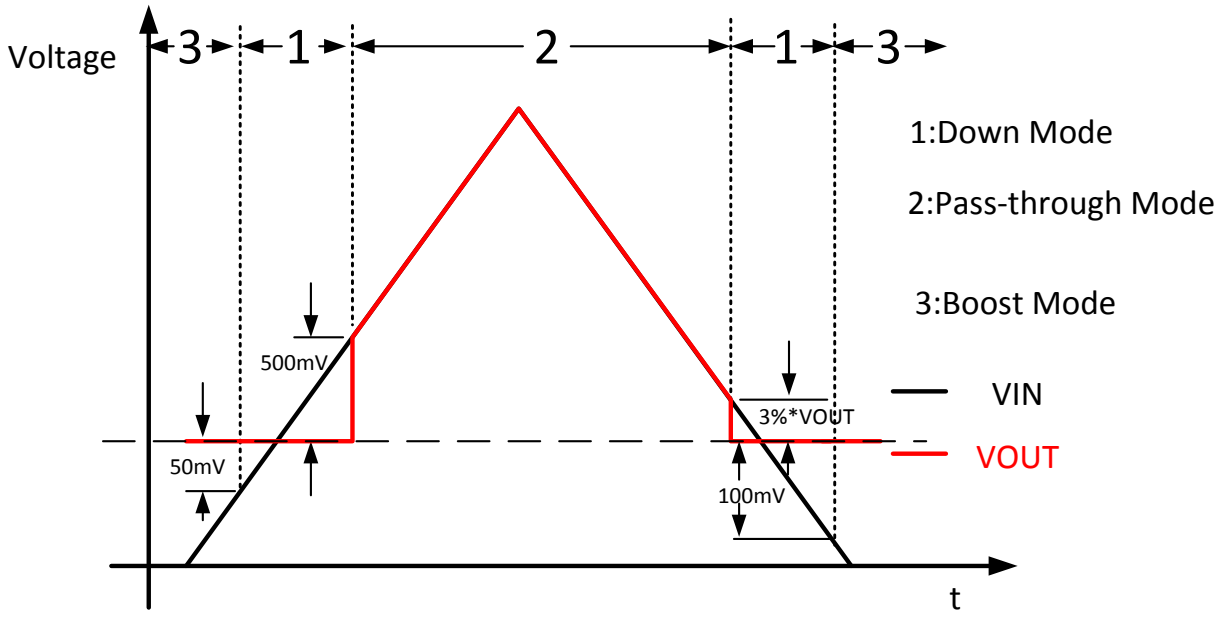


**图 8-4. Down Mode and Pass-Through Operation**

### 8.3.9 Thermal Shutdown

The TPS61099x has a built-in temperature sensor which monitors the internal junction temperature in boost mode operation. If the junction temperature exceeds the threshold 150°C, the device stops operating. As soon as the junction temperature drops below the shutdown temperature minus the hysteresis, typically 125°C, it starts operating again.

## 8.4 Device Functional Modes

### 8.4.1 Burst Mode Operation under Light Load Condition

The boost converter of TPS61099x enters into Burst Mode operation under light load condition. Refer to *Boost Controller Operation* for details.

### 8.4.2 Down Mode Regulation and Pass-Through Mode Operation

The boost converter of TPS61099x automatically enters into Down Mode or pass-through mode operation when input voltage is higher than the target output voltage. Refer to *Down Mode Regulation and Pass-Through Operation* for details.

# 9 Application and Implementation

**Note**

以下应用部分中的信息不属于 TI 器件规格的范围，TI 不担保其准确性和完整性。TI 的客 户应负责确定器件是否适用于其应用。客户应验证并测试其设计，以确保系统功能。

## 9.1 Application Information

The TPS61099x is a synchronous boost converter designed to operate at a wide input voltage from 0.7 V to 5.5 V with 1-A peak switch current limit. The device adopts a hysteretic control scheme so the operating frequency is not a constant value, which varies with different input/output voltages and inductor values. It only consumes 1-µA quiescent current under light load condition. It also supports true shutdown to disconnect the load from the input in order to minimize the leakage current. Therefore, it is very suitable for alkaline battery, coin-cell battery, Li-ion or Li-polymer battery powered systems to extend the battery running time.

## 9.2 Typical Application - 5 V Output Boost Converter

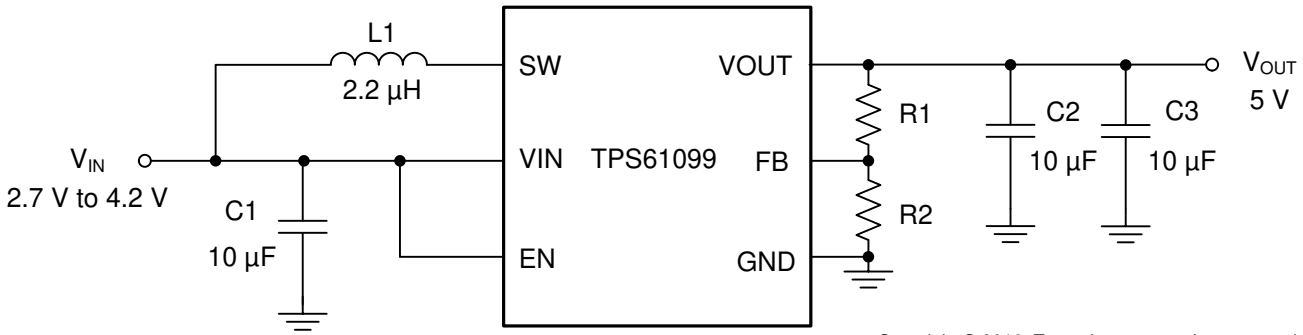


Copyright © 2016, Texas Instruments Incorporated

### 9.2.1 Design Requirements

A typical application example is the memory LCD, which normally requires 5-V output as its bias voltage and only consumes less than 1 mA current. The following design procedure can be used to select external component values for the TPS61099x.

**表 9-1. Design Requirements**

| PARAMETERS | VALUES |
|---|---|
| Input Voltage | 2.7 V ~ 4.2 V |
| Output Voltage | 5 V |
| Output Current | 1 mA |
| Output Voltage Ripple | ± 50 mV |

#### *9.2.1.1 Detailed Design Procedure*

##### 9.2.1.1.1 Custom Design With WEBENCH® Tools

Click here to create a custom design using the TPS61099 device with the WEBENCH® Power Designer.

1. Start by entering the input voltage ($V_{IN}$), output voltage ($V_{OUT}$), and output current ($I_{OUT}$) requirements.
2. Optimize the design for key parameters such as efficiency, footprint, and cost using the optimizer dial.
3. Compare the generated design with other possible solutions from Texas Instruments.

The WEBENCH Power Designer provides a customized schematic along with a list of materials with real-time pricing and component availability.

In most cases, these actions are available:

- Run electrical simulations to see important waveforms and circuit performance
- Run thermal simulations to understand board thermal performance
- Export customized schematic and layout into popular CAD formats


Copyright © 2021 Texas Instruments Incorporated

- Print PDF reports for the design, and share the design with colleagues

Get more information about WEBENCH tools at www.ti.com/WEBENCH.

#### 9.2.1.1.2 Programming the Output Voltage

There are two ways to set the output voltage of the TPS61099x. For adjustable output voltage version, select the external resistor divider R1 and R2, as shown in 方程式 1, the output voltage is programmed to the desired value. When the output voltage is regulated, the typical voltage at the FB pin is $V_{REF}$ of 1.0 V.

$$V_{OUT} = V_{REF} \cdot \frac{R1 + R2}{R2} \tag{1}$$

For fixed output voltage versions, the FB pin should be connected to the GND. The TPS61099x offers diverse fixed voltage versions, refer to *Device Comparison Table* for version details.

In this example, 5-V output is required to bias the memory LCD. For the best accuracy, the current following through R2 should be 100 times larger than FB pin leakage current. Changing R2 towards a lower value increases the robustness against noise injection. Changing R2 towards higher values reduces the FB divider current for achieving the highest efficiency at low load currents. 1-MΩ and 249-kΩ resistors are selected for R1 and R2 in this example. High accuracy resistors are recommended for better output voltage accuracy.

#### 9.2.1.1.3 Maximum Output Current

The maximum output capability of the TPS61099x is determined by the input to output ratio and the current limit of the boost converter. It can be estimated by 方程式 2.

$$I_{OUT(max)} = \frac{V_{IN} \cdot (I_{LIM} - \frac{I_{LH}}{2}) \cdot \eta}{V_{OUT}} \tag{2}$$

where

- $\eta$ is the conversion efficiency, use 85% for estimation
- $I_{LH}$ is the current ripple value
- $I_{LIM}$ is the switch current limit

Minimum input voltage, maximum boost output voltage and minimum current limit $I_{LIM}$ should be used as the worst case condition for the estimation.

#### 9.2.1.1.4 Inductor Selection

Because the selection of the inductor affects steady state operation, transient behavior, and loop stability, the inductor is the most important component in power regulator design. There are three important inductor specifications, inductor value, saturation current, and dc resistance (DCR).

The TPS61099x is optimized to work with inductor values between 1 µH and 2.2 µH. For best stability consideration, a 2.2-µH inductor is recommended under Vout > 3.0V condition while choosing a 1-µH inductor for applications under Vout ≤ 3.0V condition. Follow 方程式 3 and 方程式 4 to calculate the inductor's peak current for the application. Depending on different load conditions, the TPS61099x works in continuous current mode or discontinuous mode. In different modes, the peak currents of the inductor are also different. 方程式 3 provides an easy way to estimate whether the device works in CCM or DCM. As long as the 方程式 3 is true, continuous current mode is typically established. Otherwise, discontinuous current mode is typically established.

$$\frac{V_{OUT} \cdot I_{OUT}}{V_{IN} \times \eta} > \frac{I_{LH}}{2} \tag{3}$$

The inductor current ripple $I_{LH}$ is fixed by design. Therefore, the peak inductor current is calculated with 方程式 4.

$$I_{L,peak} = \frac{V_{OUT} \cdot I_{OUT}}{V_{IN} \times \eta} + \frac{I_{LH}}{2}; \quad \text{continuous current mode operation}$$
$$I_{L,peak} = I_{LH}; \quad \text{discontinuous current mode operation} \tag{4}$$

where

- $I_{L,peak}$ is the peak inductor current.

The inductor's saturation current must be higher than the calculated peak inductor current. 表 9-2 lists the recommended inductors for TPS61099x device.

After choosing the inductor, the estimated switching frequency $f$ in continuous current mode can be calculated by 方程式 5. The switching frequency is not a constant value, which is determined by L, $V_{IN}$ and $V_{OUT}$.

$$f = \frac{V_{IN} \cdot (V_{OUT} - V_{IN} \cdot \eta)}{L \cdot I_{LH} \cdot V_{OUT}} \tag{5}$$

**表 9-2. List of Inductors**

| VOUT [V](1) | INDUCTANCE [µH] | SATURATION CURRENT [A] | DC RESISTANCE [mΩ] | SIZE (LxWxH) | PART NUMBER | MANUFACTURER |
|---|---|---|---|---|---|---|
| > 3.0 | 2.2 | 1.95 | 80 | 2.5 x 2.0 x 1.2 | 74404024022 | Würth Elektronik |
| | 2.2 | 1.7 | 92 | 2.5 x 2.0 x 1.1 | LQH2HPN2R2MJR | muRata |
| | 2.2 | 1.45 | 163 | 2.0 x 1.6 x 1.0 | VLS201610CX-2R2M | TDK |
| ≤ 3.0 | 1.0 | 2.6 | 37 | 2.5 x 2.0 x 1.2 | 74404024010 | Würth Elektronik |
| | 1.0 | 2.3 | 48 | 2.5 x 2.0 x 1.0 | MLP2520W1R0MT0S1 | TDK |
| | 1.0 | 1.5 | 80 | 2.0 x 1.2 x 1.0 | LQM21PN1R0MGH | muRata |

(1) See *Third-Party Products* disclaimer

#### 9.2.1.1.5 Capacitor Selection

For best output and input voltage filtering, low ESR X5R or X7R ceramic capacitors are recommended.

The input capacitor minimizes input voltage ripple, suppresses input voltage spikes and provides a stable system rail for the device. An input capacitor value of 10 µF is normally recommended to improve transient behavior of the regulator and EMI behavior of the total power supply circuit. A ceramic capacitor placed as close as possible to the VIN and GND pins of the IC is recommended.

For the output capacitor of VOUT pin, small ceramic capacitors are recommended, placed as close as possible to the VOUT and GND pins of the IC. If, for any reason, the application requires the use of large capacitors which cannot be placed close to the IC, the use of a small ceramic capacitor with a capacitance value of 1 µF in parallel to the large one is recommended. This small capacitor should be placed as close as possible to the VOUT and GND pins of the IC.

From the power stage point of view, the output capacitor sets the corner frequency of the converter while the inductor creates a Right-Half-Plane-Zero. Consequently, with a larger inductor, a larger output capacitor must be used. The TPS61099x is optimized to work with the inductor from 1 µH to 2.2 µH, so the minimal output capacitor value is 20 µF (nominal value). Increasing the output capacitor makes the output ripple smaller in PWM mode.

When selecting capacitors, ceramic capacitor’s derating effect under bias should be considered. Choose the right nominal capacitance by checking capacitor's DC bias characteristics. In this example, GRM188R60J106ME84D, which is a 10-µF ceramic capacitor with high effective capacitance value at DC biased condition, is selected for $V_{OUT}$ rail. The performance of TPS61099x is shown in *Application Curves* section.


Copyright © 2021 Texas Instruments Incorporated

### 9.2.1.2 Application Curves

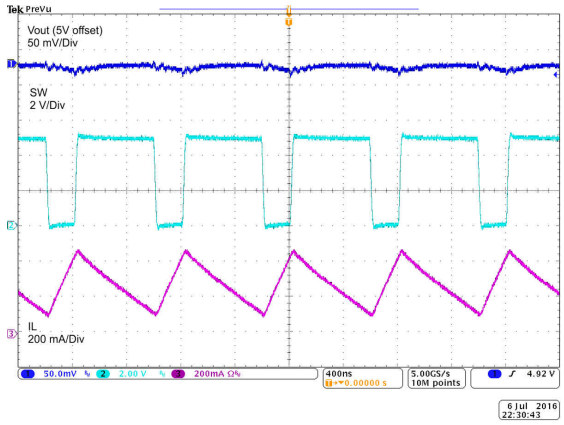


$V_{IN}$ = 3.7 V $V_{OUT}$ = 5 V $I_{OUT}$ = 200 mA

**图 9-1. Switching Waveform at Heavy Load**

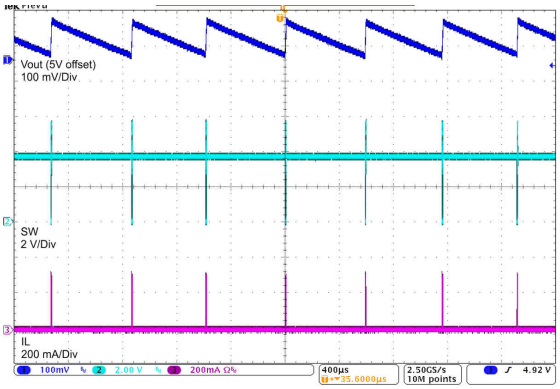


$V_{IN}$ = 3.7 V $V_{OUT}$ = 5 V $I_{OUT}$ = 10 mA

**图 9-2. Switching Waveform at Light Load**

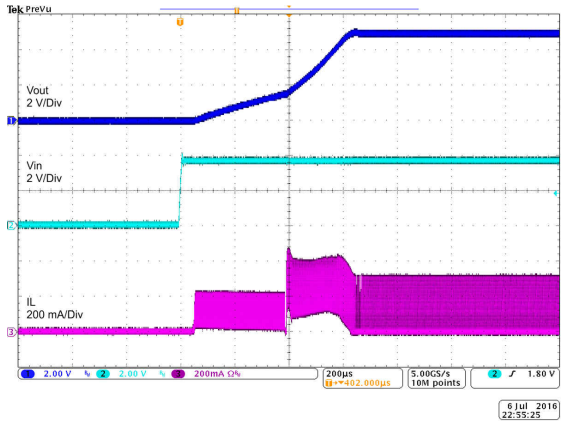


$V_{IN}$ = 3.7 V $V_{OUT}$ = 5 V $I_{OUT}$ = 50 mA

**图 9-3. Startup by $V_{IN}$**

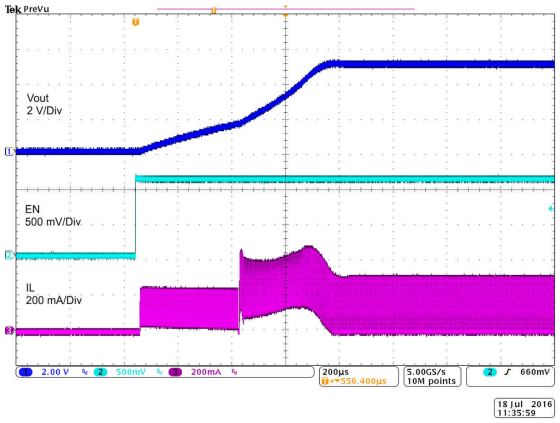


$V_{IN}$ = 3.7 V $V_{OUT}$ = 5 V $I_{OUT}$ = 100 mA

**图 9-4. Startup by EN**

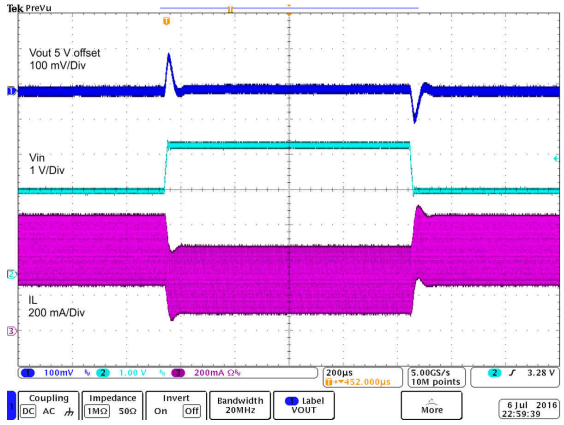


$V_{IN}$ = 2.4 V to 3.7 V $V_{OUT}$ = 5 V $I_{OUT}$ = 200 mA

**图 9-5. Line Transient**

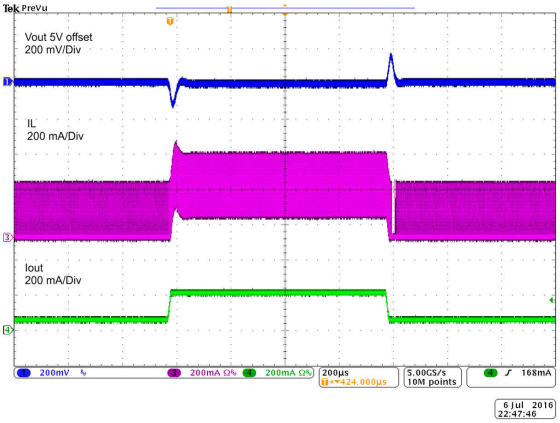


$V_{IN}$ = 3.7 V $V_{OUT}$ = 5 V $I_{OUT}$ = 50 mA to 200 mA

**图 9-6. Load Transient**

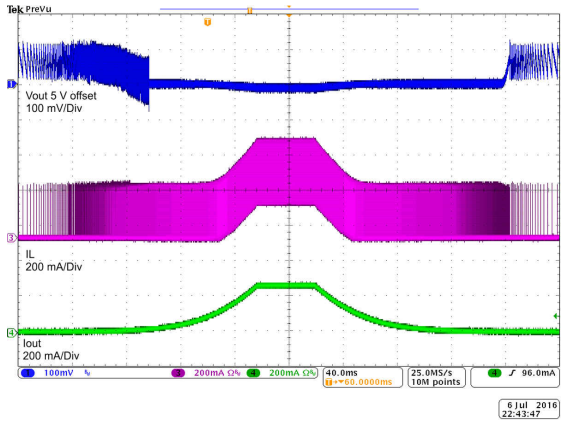


$V_{IN}$ = 3.7 V $V_{OUT}$ = 5 V $I_{OUT}$ = 0 mA to 250 mA

**图 9-7. Load Regulation**

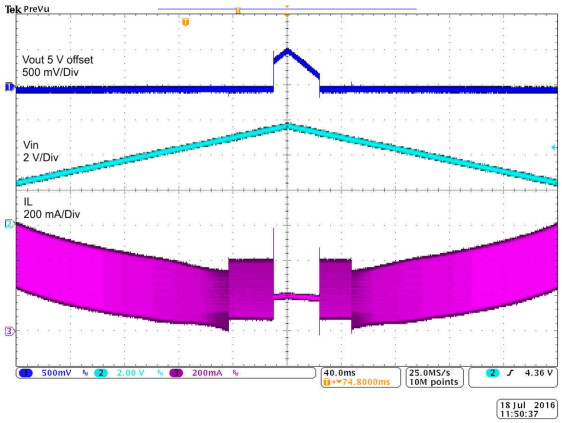


$V_{IN}$ = 2.4 to 5.5 V $V_{OUT}$ = 5 V $I_{OUT}$ = 200 mA

**图 9-8. Line Regulation**

## 10 Power Supply Recommendations

The TPS61099x family is designed to operate from an input voltage supply range between 0.7 V to 5.5 V. The power supply can be alkaline battery, NiMH rechargeable battery, Li-Mn battery or rechargeable Li-Ion battery. The input supply should be well regulated with the rating of TPS61099x.


Copyright © 2021 Texas Instruments Incorporated

# 11 Layout

## 11.1 Layout Guidelines

As for all switching power supplies, the layout is an important step in the design, especially at high peak currents and high switching frequencies. If the layout is not carefully done, the regulator could show stability problems as well as EMI problems. Therefore, use wide and short traces for the main current path and for the power ground paths. The input and output capacitor, as well as the inductor should be placed as close as possible to the IC.

## 11.2 Layout Example

The bottom layer is a large GND plane connected by vias.

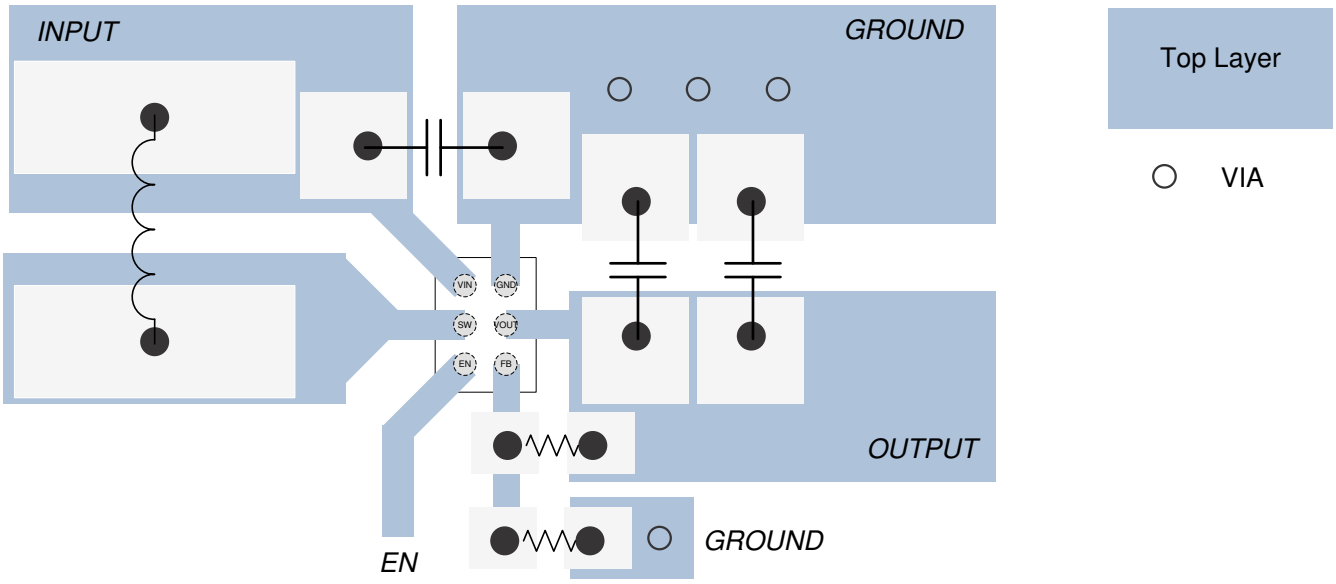


图 11-1. Layout -YFF

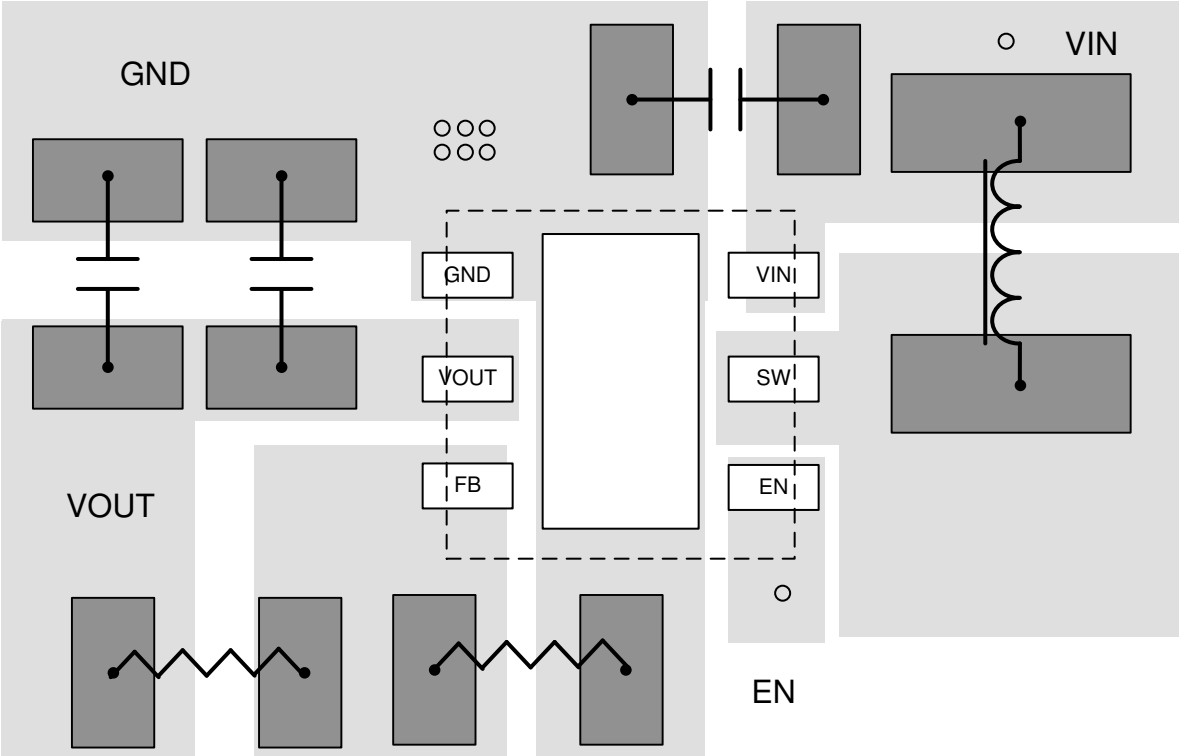


图 11-2. Layout - DRV


Copyright © 2021 Texas Instruments Incorporated

# 12 Device and Documentation Support

## 12.1 Device Support

### 12.1.1 Development Support

#### *12.1.1.1 Custom Design With WEBENCH® Tools*

Click here to create a custom design using the TPS61099x device with the WEBENCH® Power Designer.

1. Start by entering the input voltage ($V_{IN}$), output voltage ($V_{OUT}$), and output current ($I_{OUT}$) requirements.
2. Optimize the design for key parameters such as efficiency, footprint, and cost using the optimizer dial.
3. Compare the generated design with other possible solutions from Texas Instruments.

The WEBENCH Power Designer provides a customized schematic along with a list of materials with real-time pricing and component availability.

In most cases, these actions are available:

- Run electrical simulations to see important waveforms and circuit performance
- Run thermal simulations to understand board thermal performance
- Export customized schematic and layout into popular CAD formats
- Print PDF reports for the design, and share the design with colleagues

Get more information about WEBENCH tools at www.ti.com/WEBENCH.

### 12.1.2 第三方产品免责声明

TI 发布的与第三方产品或服务有关的信息，不能构成与此类产品或服务或保修的适用性有关的认可，不能构成此类产品或服务单独或与任何 TI 产品或服务一起的表示或认可。

## 12.2 Documentation Support

### 12.2.1 Related Documentation

For related documentation see the following:

- *Performing Accurate PFM Mode Efficiency Measurements*, SLVA236
- *Accurately measuring efficiency of ultralow-IQ devices*, SLYT558
- *IQ: What it is, what it isn’t, and how to use it*, SLYT412

## 12.3 接收文档更新通知

要接收文档更新通知，请导航至 ti.com 上的器件产品文件夹。点击*订阅更新* 进行注册，即可每周接收产品信息更改摘要。有关更改的详细信息，请查看任何已修订文档中包含的修订历史记录。

## 12.4 支持资源

TI E2E™ 支持论坛是工程师的重要参考资料，可直接从专家获得快速、经过验证的解答和设计帮助。搜索现有解答或提出自己的问题可获得所需的快速设计帮助。

链接的内容由各个贡献者“按原样”提供。这些内容并不构成 TI 技术规范，并且不一定反映 TI 的观点；请参阅 TI 的《使用条款》。

### 12.5 Trademarks

TI E2E™ is a trademark of Texas Instruments.
WEBENCH® is a registered trademark of Texas Instruments.
is a registered trademark of Texas Instruments.
所有商标均为其各自所有者的财产。

### 12.6 Electrostatic Discharge Caution

This integrated circuit can be damaged by ESD. Texas Instruments recommends that all integrated circuits be handled with appropriate precautions. Failure to observe proper handling and installation procedures can cause damage.

ESD damage can range from subtle performance degradation to complete device failure. Precision integrated circuits may be more susceptible to damage because very small parametric changes could cause the device not to meet its published specifications.

### 12.7 术语表

TI 术语表　　本术语表列出并解释了术语、首字母缩略词和定义。

## 13 Mechanical, Packaging, and Orderable Information

The following pages include mechanical packaging and orderable information. This information is the most current data available for the designated devices. This data is subject to change without notice and revision of this document. For browser-based versions of this data sheet, refer to the left-hand navigation.


Copyright © 2021 Texas Instruments Incorporated

# 重要声明和免责声明

TI 提供技术和可靠性数据（包括数据表）、设计资源（包括参考设计）、应用或其他设计建议、网络工具、安全信息和其他资源，不保证没有瑕疵且不做出任何明示或暗示的担保，包括但不限于对适销性、某特定用途方面的适用性或不侵犯任何第三方知识产权的暗示担保。

这些资源可供使用 TI 产品进行设计的熟练开发人员使用。您将自行承担以下全部责任：(1) 针对您的应用选择合适的 TI 产品，(2) 设计、验证并测试您的应用，(3) 确保您的应用满足相应标准以及任何其他安全、安保或其他要求。这些资源如有变更，恕不另行通知。TI 授权您仅可将这些资源用于研发本资源所述的 TI 产品的应用。严禁对这些资源进行其他复制或展示。您无权使用任何其他 TI 知识产权或任何第三方知识产权。您应全额赔偿因在这些资源的使用中对 TI 及其代表造成的任何索赔、损害、成本、损失和债务，TI 对此概不负责。

TI 提供的产品受 TI 的销售条款 (https:www.ti.com/legal/termsofsale.html) 或 ti.com 上其他适用条款/TI 产品随附的其他适用条款的约束。TI 提供这些资源并不会扩展或以其他方式更改 TI 针对 TI 产品发布的适用的担保或担保免责声明。

邮寄地址：Texas Instruments, Post Office Box 655303, Dallas, Texas 75265
Copyright © 2021，德州仪器 (TI) 公司

## PACKAGING INFORMATION

| Orderable Device | Status (1) | Package Type | Package Drawing | Pins | Package Qty | Eco Plan (2) | Lead finish/ Ball material (6) | MSL Peak Temp (3) | Op Temp (°C) | Device Marking (4/5) | Samples |
|---|---|---|---|---|---|---|---|---|---|---|---|
| TPS610992YFFR | ACTIVE | DSBGA | YFF | 6 | 3000 | RoHS & Green | SNAGCU | Level-1-260C-UNLIM | -40 to 85 | 19J | Samples |
| TPS610992YFFT | ACTIVE | DSBGA | YFF | 6 | 250 | RoHS & Green | SNAGCU | Level-1-260C-UNLIM | -40 to 85 | 19J | Samples |
| TPS610993YFFR | ACTIVE | DSBGA | YFF | 6 | 3000 | RoHS & Green | SNAGCU | Level-1-260C-UNLIM | -40 to 85 | 17X | Samples |
| TPS610993YFFT | ACTIVE | DSBGA | YFF | 6 | 250 | RoHS & Green | SNAGCU | Level-1-260C-UNLIM | -40 to 85 | 17X | Samples |
| TPS610994YFFR | ACTIVE | DSBGA | YFF | 6 | 3000 | RoHS & Green | SNAGCU | Level-1-260C-UNLIM | -40 to 85 | 17N | Samples |
| TPS610994YFFT | ACTIVE | DSBGA | YFF | 6 | 250 | RoHS & Green | SNAGCU | Level-1-260C-UNLIM | -40 to 85 | 17N | Samples |
| TPS610995DRVR | ACTIVE | WSON | DRV | 6 | 3000 | RoHS & Green | NIPDAU | Level-1-260C-UNLIM | -40 to 125 | 1NDU | Samples |
| TPS610995DRVT | ACTIVE | WSON | DRV | 6 | 250 | RoHS & Green | NIPDAU | Level-1-260C-UNLIM | -40 to 125 | 1NDU | Samples |
| TPS610995YFFR | ACTIVE | DSBGA | YFF | 6 | 3000 | RoHS & Green | SNAGCU | Level-1-260C-UNLIM | -40 to 85 | 19K | Samples |
| TPS610995YFFT | ACTIVE | DSBGA | YFF | 6 | 250 | RoHS & Green | SNAGCU | Level-1-260C-UNLIM | -40 to 85 | 19K | Samples |
| TPS610996YFFR | ACTIVE | DSBGA | YFF | 6 | 3000 | RoHS & Green | SNAGCU | Level-1-260C-UNLIM | -40 to 85 | 19I | Samples |
| TPS610996YFFT | ACTIVE | DSBGA | YFF | 6 | 250 | RoHS & Green | SNAGCU | Level-1-260C-UNLIM | -40 to 85 | 19I | Samples |
| TPS610997YFFR | ACTIVE | DSBGA | YFF | 6 | 3000 | RoHS & Green | SNAGCU | Level-1-260C-UNLIM | -40 to 85 | 14K | Samples |
| TPS610997YFFT | ACTIVE | DSBGA | YFF | 6 | 250 | RoHS & Green | SNAGCU | Level-1-260C-UNLIM | -40 to 85 | 14K | Samples |
| TPS61099DRVR | ACTIVE | WSON | DRV | 6 | 3000 | RoHS & Green | NIPDAU | Level-2-260C-1 YEAR | -40 to 150 | 1I8U | Samples |
| TPS61099YFFR | ACTIVE | DSBGA | YFF | 6 | 3000 | RoHS & Green | SNAGCU | Level-1-260C-UNLIM | -40 to 85 | 12G | Samples |
| TPS61099YFFT | ACTIVE | DSBGA | YFF | 6 | 250 | RoHS & Green | SNAGCU | Level-1-260C-UNLIM | -40 to 85 | 12G | Samples |

(1) The marketing status values are defined as follows:
**ACTIVE:** Product device recommended for new designs.
**LIFEBUY:** TI has announced that the device will be discontinued, and a lifetime-buy period is in effect.
**NRND:** Not recommended for new designs. Device is in production to support existing customers, but TI does not recommend using this part in a new design.
**PREVIEW:** Device has been announced but is not in production. Samples may or may not be available.

**OBSOLETE:** TI has discontinued the production of the device.

(2) **RoHS:** TI defines "RoHS" to mean semiconductor products that are compliant with the current EU RoHS requirements for all 10 RoHS substances, including the requirement that RoHS substance do not exceed 0.1% by weight in homogeneous materials. Where designed to be soldered at high temperatures, "RoHS" products are suitable for use in specified lead-free processes. TI may reference these types of products as "Pb-Free".
**RoHS Exempt:** TI defines "RoHS Exempt" to mean products that contain lead but are compliant with EU RoHS pursuant to a specific EU RoHS exemption.
**Green:** TI defines "Green" to mean the content of Chlorine (Cl) and Bromine (Br) based flame retardants meet JS709B low halogen requirements of <=1000ppm threshold. Antimony trioxide based flame retardants must also meet the <=1000ppm threshold requirement.

(3) MSL, Peak Temp. - The Moisture Sensitivity Level rating according to the JEDEC industry standard classifications, and peak solder temperature.

(4) There may be additional marking, which relates to the logo, the lot trace code information, or the environmental category on the device.

(5) Multiple Device Markings will be inside parentheses. Only one Device Marking contained in parentheses and separated by a "~" will appear on a device. If a line is indented then it is a continuation of the previous line and the two combined represent the entire Device Marking for that device.

(6) Lead finish/Ball material - Orderable Devices may have multiple material finish options. Finish options are separated by a vertical ruled line. Lead finish/Ball material values may wrap to two lines if the finish value exceeds the maximum column width.

**Important Information and Disclaimer:**The information provided on this page represents TI's knowledge and belief as of the date that it is provided. TI bases its knowledge and belief on information provided by third parties, and makes no representation or warranty as to the accuracy of such information. Efforts are underway to better integrate information from third parties. TI has taken and continues to take reasonable steps to provide representative and accurate information but may not have conducted destructive testing or chemical analysis on incoming materials and chemicals. TI and TI suppliers consider certain information to be proprietary, and thus CAS numbers and other limited information may not be available for release.

In no event shall TI's liability arising out of such information exceed the total purchase price of the TI part(s) at issue in this document sold by TI to Customer on an annual basis.

## TAPE AND REEL INFORMATION

**REEL DIMENSIONS**

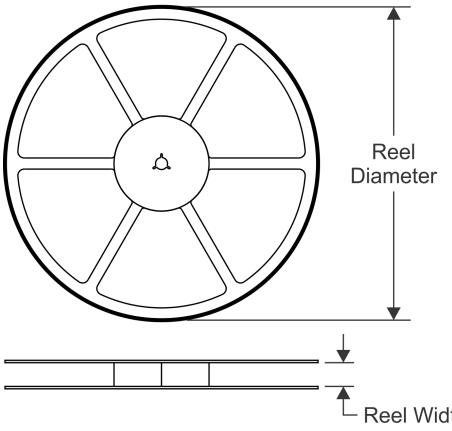


**TAPE DIMENSIONS**

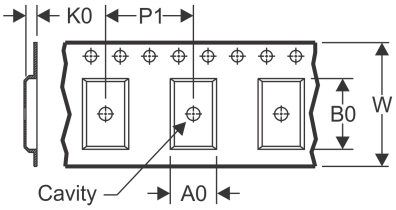


| | |
|---|---|
| A0 | Dimension designed to accommodate the component width |
| B0 | Dimension designed to accommodate the component length |
| K0 | Dimension designed to accommodate the component thickness |
| W | Overall width of the carrier tape |
| P1 | Pitch between successive cavity centers |

**QUADRANT ASSIGNMENTS FOR PIN 1 ORIENTATION IN TAPE**

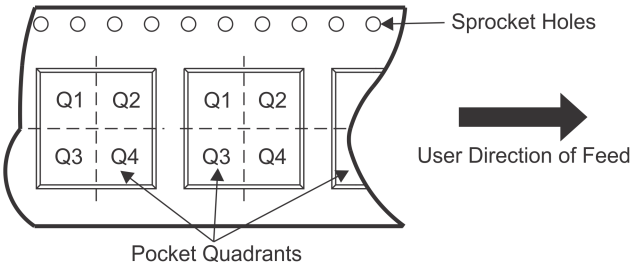


*All dimensions are nominal

| Device | Package Type | Package Drawing | Pins | SPQ | Reel Diameter (mm) | Reel Width W1 (mm) | A0 (mm) | B0 (mm) | K0 (mm) | P1 (mm) | W (mm) | Pin1 Quadrant |
|---|---|---|---|---|---|---|---|---|---|---|---|---|
| TPS610992YFFR | DSBGA | YFF | 6 | 3000 | 180.0 | 8.4 | 0.96 | 1.36 | 0.69 | 4.0 | 8.0 | Q1 |
| TPS610992YFFT | DSBGA | YFF | 6 | 250 | 180.0 | 8.4 | 0.96 | 1.36 | 0.69 | 4.0 | 8.0 | Q1 |
| TPS610993YFFR | DSBGA | YFF | 6 | 3000 | 180.0 | 8.4 | 0.96 | 1.36 | 0.69 | 4.0 | 8.0 | Q1 |
| TPS610993YFFT | DSBGA | YFF | 6 | 250 | 180.0 | 8.4 | 0.96 | 1.36 | 0.69 | 4.0 | 8.0 | Q1 |
| TPS610994YFFR | DSBGA | YFF | 6 | 3000 | 180.0 | 8.4 | 0.96 | 1.36 | 0.69 | 4.0 | 8.0 | Q1 |
| TPS610994YFFT | DSBGA | YFF | 6 | 250 | 180.0 | 8.4 | 0.96 | 1.36 | 0.69 | 4.0 | 8.0 | Q1 |
| TPS610995DRVR | WSON | DRV | 6 | 3000 | 180.0 | 8.4 | 2.3 | 2.3 | 1.15 | 4.0 | 8.0 | Q2 |
| TPS610995DRVT | WSON | DRV | 6 | 250 | 180.0 | 8.4 | 2.3 | 2.3 | 1.15 | 4.0 | 8.0 | Q2 |
| TPS610995YFFR | DSBGA | YFF | 6 | 3000 | 180.0 | 8.4 | 0.96 | 1.36 | 0.69 | 4.0 | 8.0 | Q1 |
| TPS610995YFFT | DSBGA | YFF | 6 | 250 | 180.0 | 8.4 | 0.96 | 1.36 | 0.69 | 4.0 | 8.0 | Q1 |
| TPS610996YFFR | DSBGA | YFF | 6 | 3000 | 180.0 | 8.4 | 0.96 | 1.36 | 0.69 | 4.0 | 8.0 | Q1 |
| TPS610996YFFT | DSBGA | YFF | 6 | 250 | 180.0 | 8.4 | 0.96 | 1.36 | 0.69 | 4.0 | 8.0 | Q1 |
| TPS610997YFFR | DSBGA | YFF | 6 | 3000 | 180.0 | 8.4 | 0.96 | 1.36 | 0.69 | 4.0 | 8.0 | Q1 |
| TPS610997YFFT | DSBGA | YFF | 6 | 250 | 180.0 | 8.4 | 0.96 | 1.36 | 0.69 | 4.0 | 8.0 | Q1 |
| TPS61099DRVR | WSON | DRV | 6 | 3000 | 180.0 | 8.4 | 2.3 | 2.3 | 1.15 | 4.0 | 8.0 | Q2 |
| TPS61099YFFR | DSBGA | YFF | 6 | 3000 | 180.0 | 8.4 | 0.96 | 1.36 | 0.69 | 4.0 | 8.0 | Q1 |
| TPS61099YFFT | DSBGA | YFF | 6 | 250 | 180.0 | 8.4 | 0.96 | 1.36 | 0.69 | 4.0 | 8.0 | Q1 |

TAPE AND REEL BOX DIMENSIONS

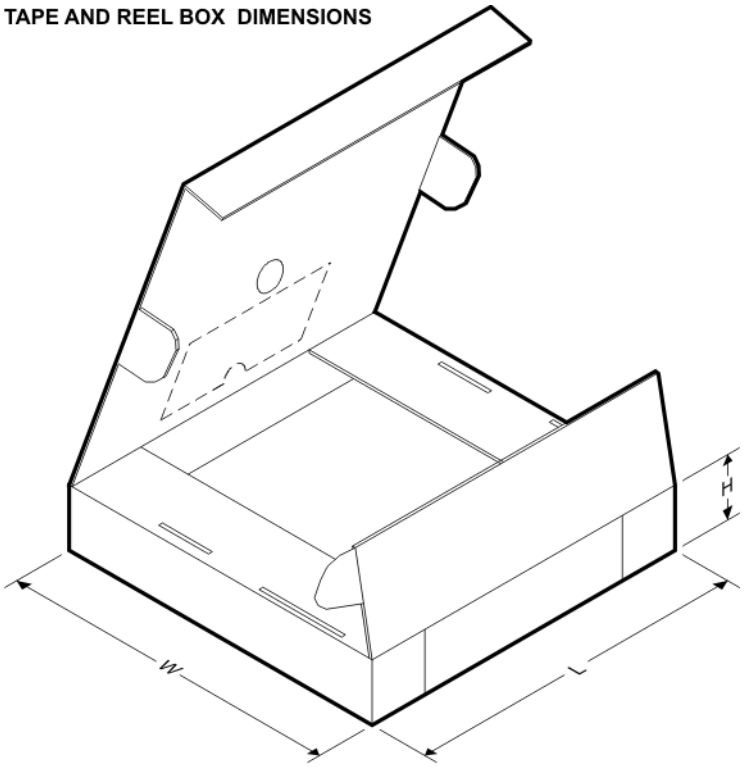


*All dimensions are nominal

| Device | Package Type | Package Drawing | Pins | SPQ | Length (mm) | Width (mm) | Height (mm) |
|---|---|---|---|---|---|---|---|
| TPS610992YFFR | DSBGA | YFF | 6 | 3000 | 182.0 | 182.0 | 20.0 |
| TPS610992YFFT | DSBGA | YFF | 6 | 250 | 182.0 | 182.0 | 20.0 |
| TPS610993YFFR | DSBGA | YFF | 6 | 3000 | 182.0 | 182.0 | 20.0 |
| TPS610993YFFT | DSBGA | YFF | 6 | 250 | 182.0 | 182.0 | 20.0 |
| TPS610994YFFR | DSBGA | YFF | 6 | 3000 | 182.0 | 182.0 | 20.0 |
| TPS610994YFFT | DSBGA | YFF | 6 | 250 | 182.0 | 182.0 | 20.0 |
| TPS610995DRVR | WSON | DRV | 6 | 3000 | 210.0 | 185.0 | 35.0 |
| TPS610995DRVT | WSON | DRV | 6 | 250 | 210.0 | 185.0 | 35.0 |
| TPS610995YFFR | DSBGA | YFF | 6 | 3000 | 182.0 | 182.0 | 20.0 |
| TPS610995YFFT | DSBGA | YFF | 6 | 250 | 182.0 | 182.0 | 20.0 |
| TPS610996YFFR | DSBGA | YFF | 6 | 3000 | 182.0 | 182.0 | 20.0 |
| TPS610996YFFT | DSBGA | YFF | 6 | 250 | 182.0 | 182.0 | 20.0 |
| TPS610997YFFR | DSBGA | YFF | 6 | 3000 | 182.0 | 182.0 | 20.0 |
| TPS610997YFFT | DSBGA | YFF | 6 | 250 | 182.0 | 182.0 | 20.0 |
| TPS61099DRVR | WSON | DRV | 6 | 3000 | 210.0 | 185.0 | 35.0 |
| TPS61099YFFR | DSBGA | YFF | 6 | 3000 | 182.0 | 182.0 | 20.0 |
| TPS61099YFFT | DSBGA | YFF | 6 | 250 | 182.0 | 182.0 | 20.0 |

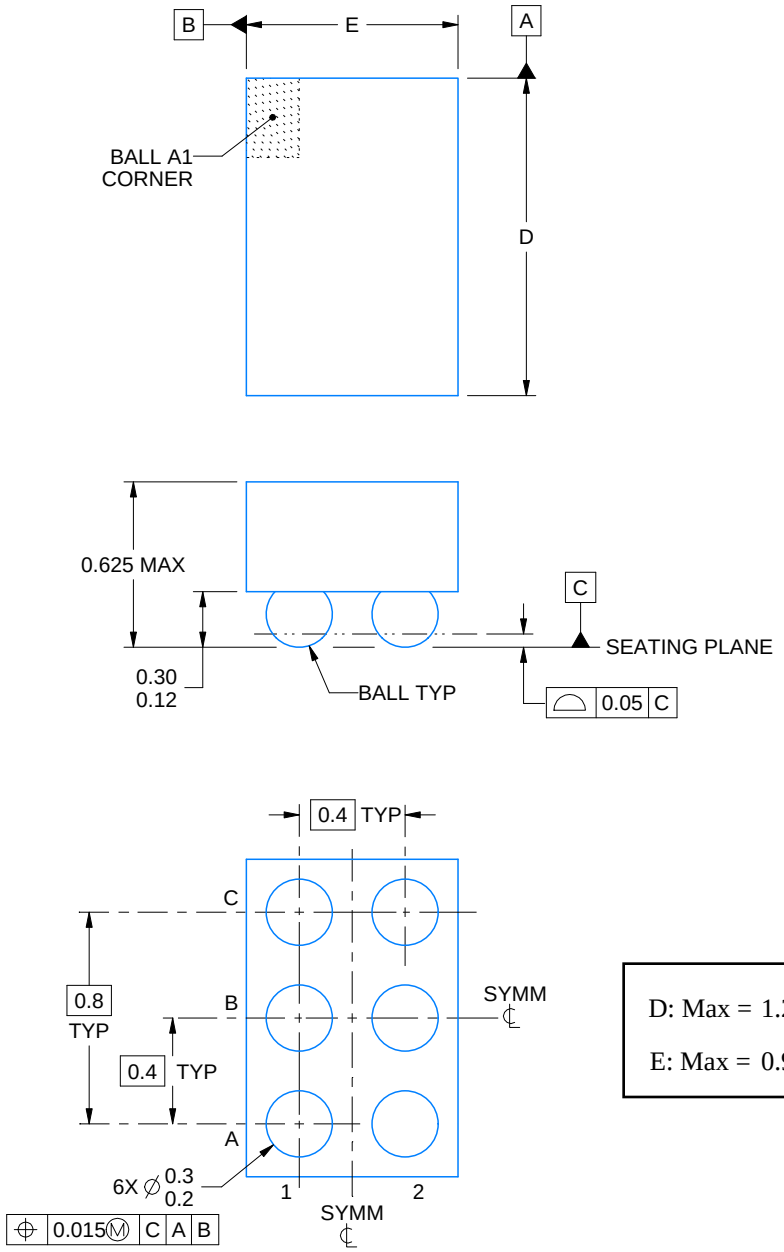


D: Max = 1.256 mm, Min =1.196 mm

E: Max = 0.914 mm, Min =0.854 mm

4223785/A 06/2017

NOTES:

1. All linear dimensions are in millimeters. Any dimensions in parenthesis are for reference only. Dimensioning and tolerancing per ASME Y14.5M.
2. This drawing is subject to change without notice.

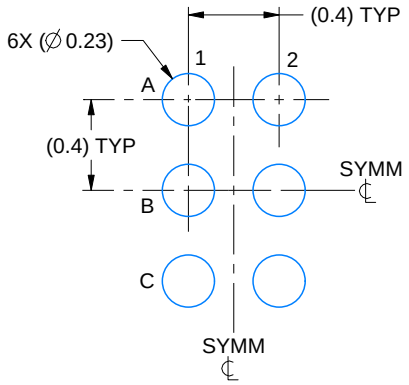


LAND PATTERN EXAMPLE
EXPOSED METAL SHOWN
SCALE:30X

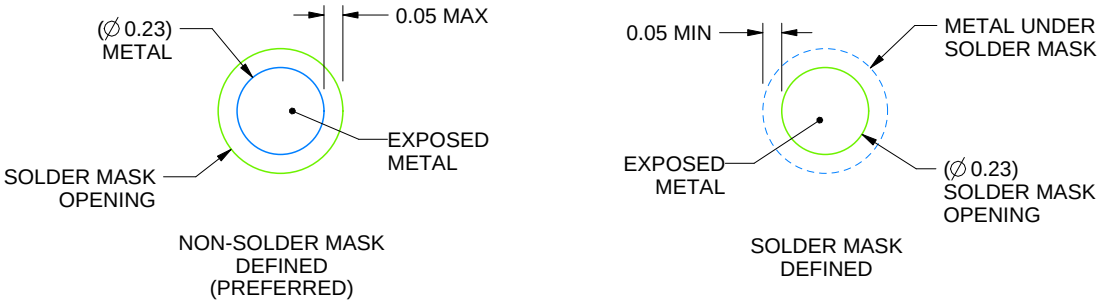


SOLDER MASK DETAILS
NOT TO SCALE

4223785/A 06/2017

NOTES: (continued)

3. Final dimensions may vary due to manufacturing tolerance considerations and also routing constraints. For more information, see Texas Instruments literature number SNVA009 (www.ti.com/lit/snva009).

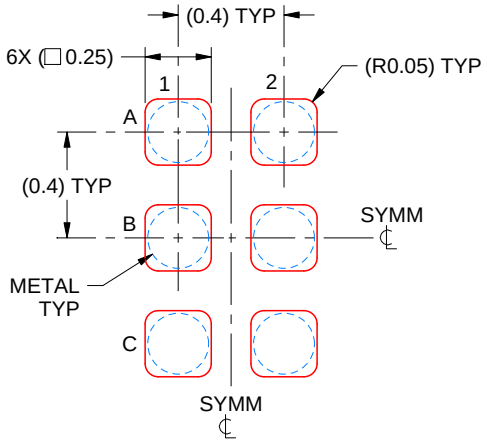


SOLDER PASTE EXAMPLE
BASED ON 0.1 mm THICK STENCIL
SCALE:35X

4223785/A 06/2017

NOTES: (continued)

4. Laser cutting apertures with trapezoidal walls and rounded corners may offer better paste release.

# DRV 6 WSON - 0.8 mm max height

PLASTIC SMALL OUTLINE - NO LEAD

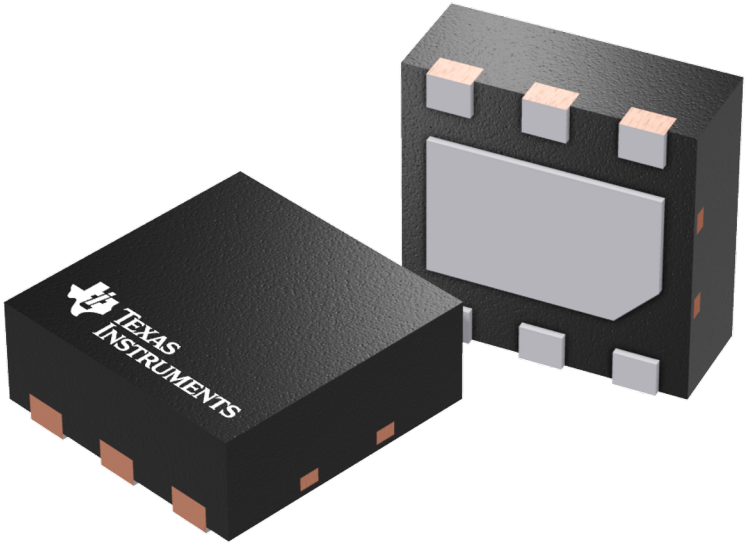


Images above are just a representation of the package family, actual package may vary.
Refer to the product data sheet for package details.



TEXAS INSTRUMENTS

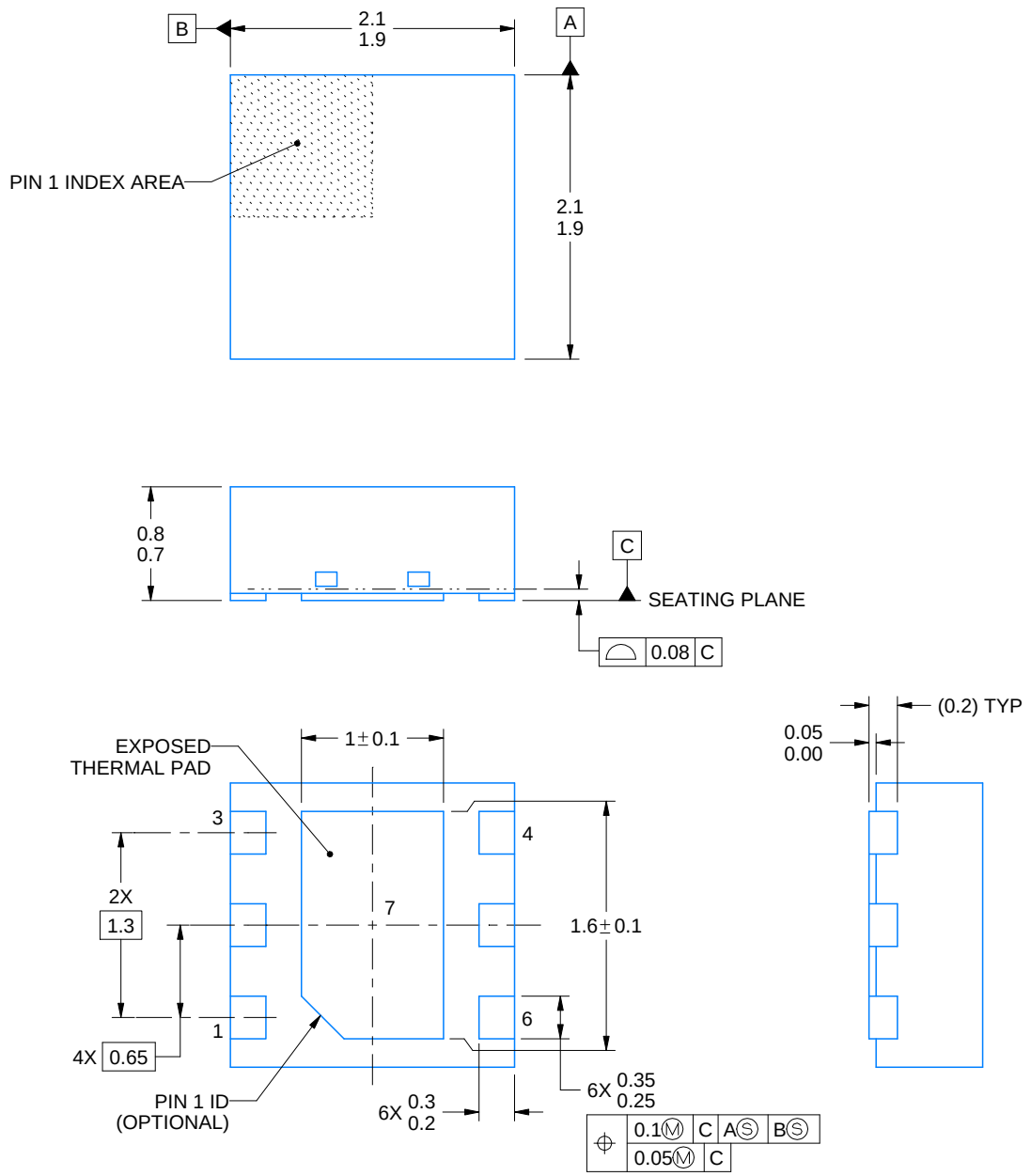


NOTES:

1. All linear dimensions are in millimeters. Any dimensions in parenthesis are for reference only. Dimensioning and tolerancing per ASME Y14.5M.
2. This drawing is subject to change without notice.
3. The package thermal pad must be soldered to the printed circuit board for thermal and mechanical performance.

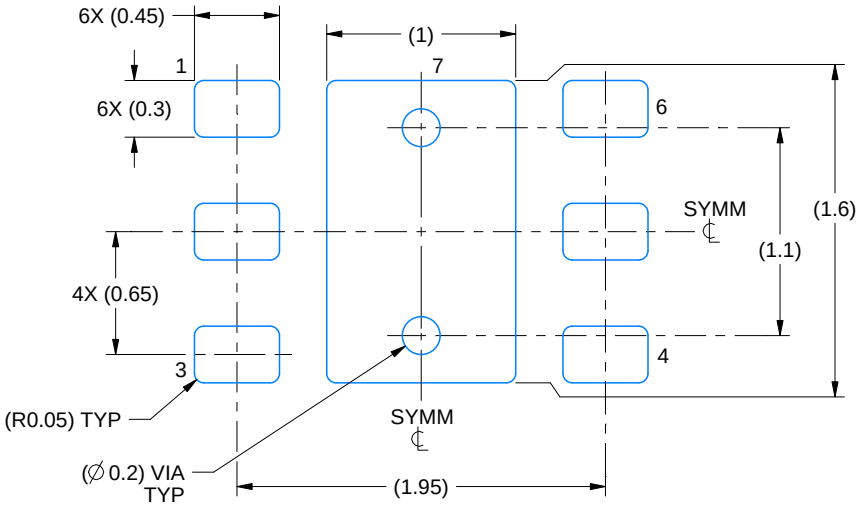


LAND PATTERN EXAMPLE
SCALE:25X

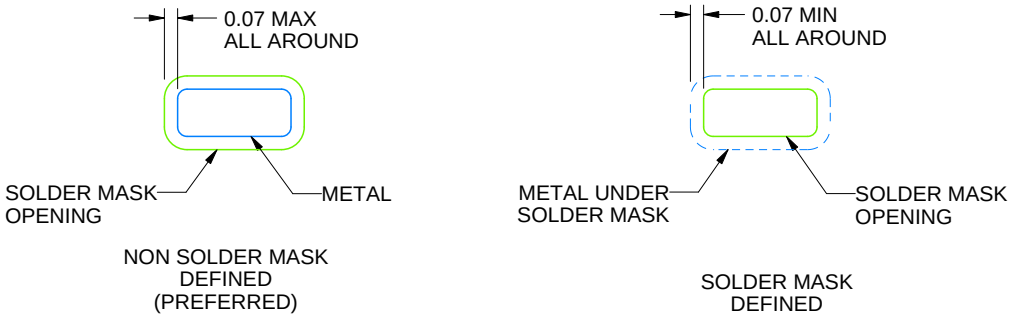


SOLDER MASK DETAILS

4222173/B 04/2018

NOTES: (continued)

4. This package is designed to be soldered to a thermal pad on the board. For more information, see Texas Instruments literature number SLUA271 (www.ti.com/lit/slua271).
5. Vias are optional depending on application, refer to device data sheet. If some or all are implemented, recommended via locations are shown.

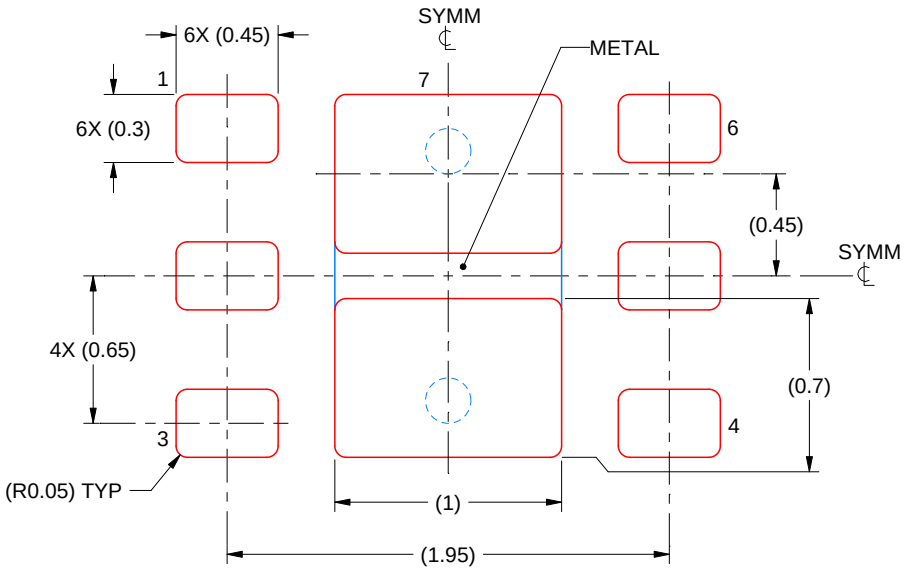


SOLDER PASTE EXAMPLE
BASED ON 0.125 mm THICK STENCIL

EXPOSED PAD #7
88% PRINTED SOLDER COVERAGE BY AREA UNDER PACKAGE
SCALE:30X

4222173/B 04/2018

NOTES: (continued)

6. Laser cutting apertures with trapezoidal walls and rounded corners may offer better paste release. IPC-7525 may have alternate design recommendations.

# 重要声明和免责声明

TI 提供技术和可靠性数据（包括数据表）、设计资源（包括参考设计）、应用或其他设计建议、网络工具、安全信息和其他资源，不保证没有瑕疵且不做出任何明示或暗示的担保，包括但不限于对适销性、某特定用途方面的适用性或不侵犯任何第三方知识产权的暗示担保。

这些资源可供使用 TI 产品进行设计的熟练开发人员使用。您将自行承担以下全部责任：(1) 针对您的应用选择合适的 TI 产品，(2) 设计、验证并测试您的应用，(3) 确保您的应用满足相应标准以及任何其他安全、安保或其他要求。这些资源如有变更，恕不另行通知。TI 授权您仅可将这些资源用于研发本资源所述的 TI 产品的应用。严禁对这些资源进行其他复制或展示。您无权使用任何其他 TI 知识产权或任何第三方知识产权。您应全额赔偿因在这些资源的使用中对 TI 及其代表造成的任何索赔、损害、成本、损失和债务，TI 对此概不负责。

TI 提供的产品受 TI 的销售条款 (https:www.ti.com.cn/zh-cn/legal/termsofsale.html) 或 ti.com.cn 上其他适用条款/TI 产品随附的其他适用条款的约束。TI 提供这些资源并不会扩展或以其他方式更改 TI 针对 TI 产品发布的适用的担保或担保免责声明。

邮寄地址：上海市浦东新区世纪大道 1568 号中建大厦 32 楼，邮政编码：200122
Copyright © 2021 德州仪器半导体技术（上海）有限公司