Programmable Multi-Chemistry Fast-Charge Management IC

Check for Samples: bq2000T

FEATURES

- **Safe Management of Fast Charge for NiCd, NiMH, or Li-Ion Battery Packs**
- **High-Frequency Switching Controller for Efficient and Simple Charger Design**
- **Pre-Charge Qualification for Detecting Shorted, Damaged, or Overheated Cells**
- **Fast-Charge Termination by ΔT/Δt for Nickel Chemistries, Minimum Current for Li-Ion Chemistries, Maximum Temperature, and Maximum Charge Time**
- **Selectable Top-Off Mode for Achieving Maximum Capacity in NiMH Batteries**
- **Programmable Trickle-Charge Mode for Reviving Deeply Discharged Batteries and for Postcharge Maintenance**
- **Built-in Battery Removal and Insertion Detection**
- **Sleep Mode for Low Power Consumption**

APPLICATIONS

- **Multi-Chemistry Charger**
- **Nickel Charger**
- **High-Power, Multi-Cell Charger**

GENERAL DESCRIPTION

The bq2000T is a programmable, monolithic IC for fast-charge management of nickel cadmium (NiCd), nickel metal-hydride (NiMH), or lithium-ion (Li-Ion) batteries in single- or multi-chemistry applications. The bq2000T chooses the proper battery chemistry (either nickel or lithium) and proceeds with the optimal charging and termination algorithms. This process eliminates undesirable, undercharged, or overcharged conditions, and allows accurate and safe termination of fast charge.

Depending on the chemistry, the bq2000T provides a number of charge termination criteria:

- Rate of temperature rise (ΔT/Δt) (for NiCd and NiMH)
- Minimum charge current (for Li-Ion)
- Maximum temperature
- Maximum charge time

For safety, the bq2000T inhibits fast charge until the battery voltage and temperature are within user-defined limits. If the battery voltage is below the low-voltage threshold, the bq2000T uses trickle-charge to condition the battery. For NiMH batteries, the bq2000T provides an optional top-off charge to maximize the battery capacity.

The integrated high-speed comparator allows the bq2000T to be the basis for a complete, high-efficiency battery charger circuit for both nickel-based and lithium-based chemistries.

8-Pin DIP or Narrow SOIC or TSSOP

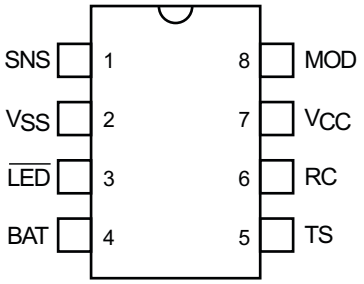

Pin Names

SNS	Current-sense input
V_{SS}	System ground
$\overline{LED}$	Charge-status output
BAT	Battery-voltage input
TS	Temperature-sense input
RC	Timer-program input
V_{CC}	Supply-voltage input
MOD	Modulation-control output

Please be aware that an important notice concerning availability, standard warranty, and use in critical applications of Texas Instruments semiconductor products and disclaimers thereto appears at the end of this data sheet.

PRODUCTION DATA information is current as of publication date. Products conform to specifications per the terms of the Texas Instruments standard warranty. Production processing does not necessarily include testing of all parameters.

Copyright © 1999–2010, Texas Instruments Incorporated

These devices have limited built-in ESD protection. The leads should be shorted together or the device placed in conductive foam during storage or handling to prevent electrostatic damage to the MOS gates.

PIN DESCRIPTIONS

SNS **Current-sense input**

Enables the bq2000T to sense the battery current via the voltage developed on this pin by an external sense-resistor connected in series with the battery pack

V_{SS} **System ground**

Connect to the battery's negative terminal

$\overline{LED}$ **Charge-status output**

Open-drain output that indicates the charging status by turning on, turning off, or flashing an external LED, driven through a resistor.

BAT **Battery-voltage input**

Battery-voltage sense input. A simple resistive divider, across the battery terminals, generates this input.

TS **Temperature-sense input**

Input for an external battery-temperature monitoring circuit. An external resistive divider network with a negative temperature-coefficient thermistor sets the lower and upper temperature thresholds.

RC **Timer-program input**

Used to program the maximum fast charge-time, maximum top-off charge-time, hold-off period, trickle charge rate, and to disable or enable top-off charge. A capacitor from V_{CC} and a resistor to ground connect to this pin.

V_{CC} **Supply-voltage input**

Recommended bypassing is 10 µF + 0.1 µF to 0.22 µF of decoupling capacitance near the pin.

MOD **Modulation-control output**

Push-pull output that controls the charging current to the battery. MOD switches high to enable charging current to flow and low to inhibit charging-current flow.

 Copyright © 1999–2010, Texas Instruments Incorporated

FUNCTIONAL DESCRIPTION

The bq2000T is a versatile, multi-chemistry battery charge control device. See Figure 1 for a functional block diagram and Figure 2 for a state diagram.

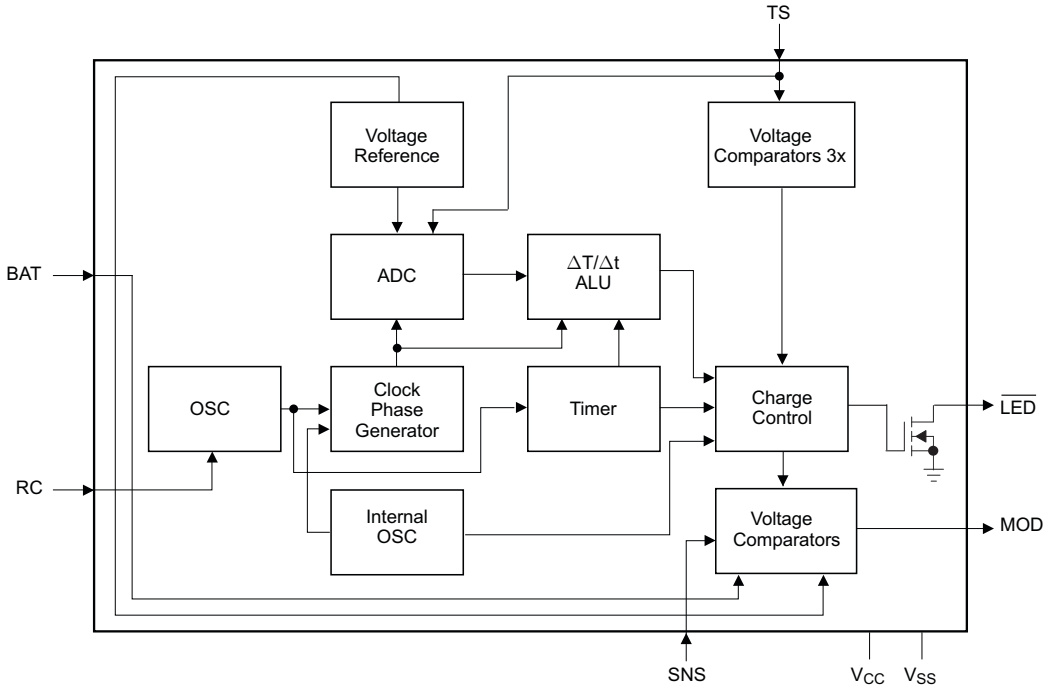

Figure 1. Functional Block Diagram

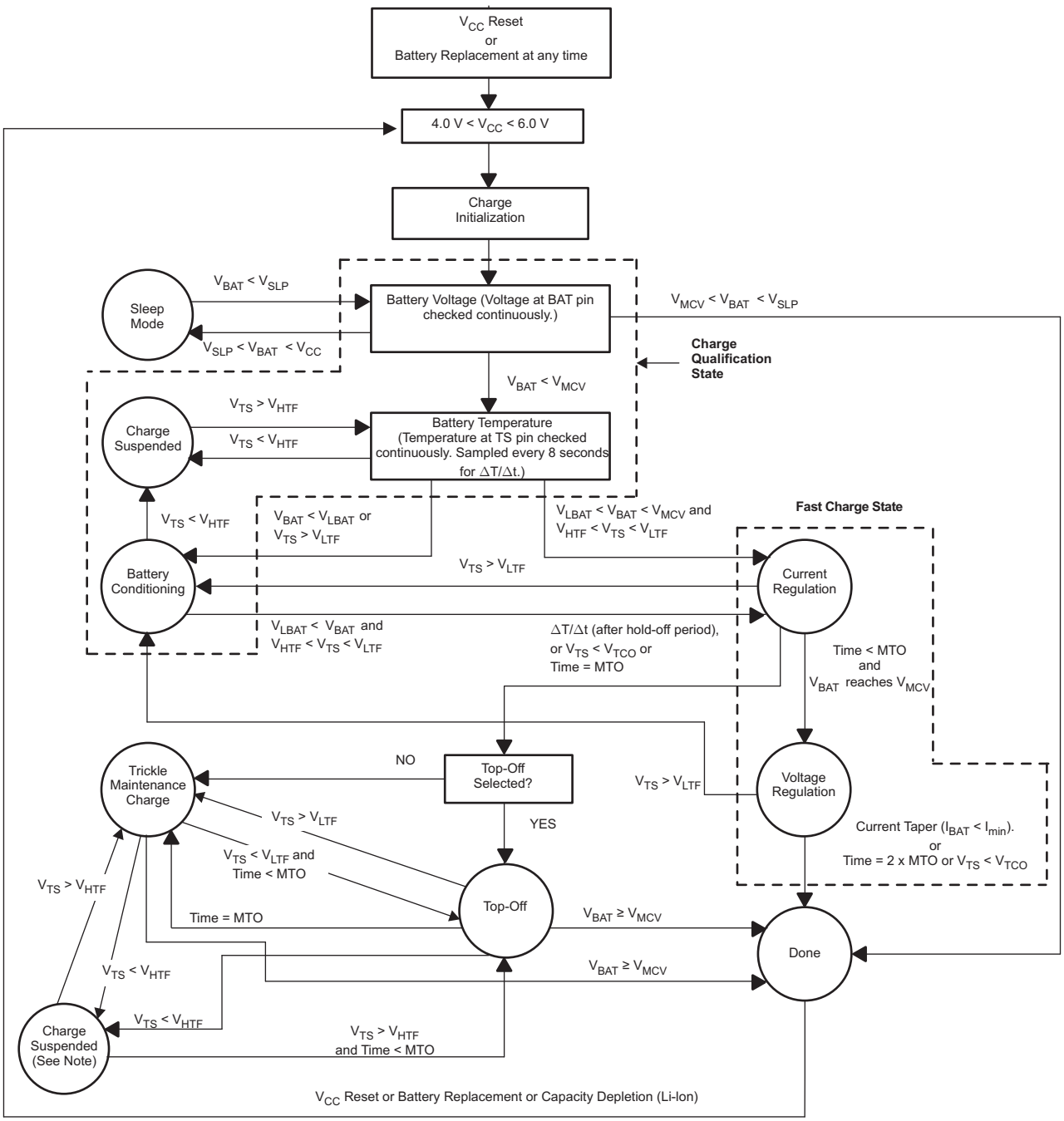

NOTE: If $V_{TS} < V_{TCO}$ at any time, may only return to Trickle Maintenance Charge state and not to Top-Off.

Figure 2. State Diagram

Copyright © 1999–2010, Texas Instruments Incorporated

ABSOLUTE MAXIMUM RATINGS(1)

		VALUE	UNIT
V_{CC}	V_{CC} relative to V_{SS}	–0.3 to 7	V
V_T	DC voltage applied on any pin, relative to V_{SS}	–0.3 to V_{CC}	V
T_{OPR}	Operating ambient temperature	–20 to 70	°C
T_{STG}	Storage temperature	–40 to 125	°C
T_{SOLDER}	Soldering temperature (10 s max)	260	°C

(1) Permanent device damage may occur if Absolute Maximum Ratings are exceeded. Functional operation should be limited to the Recommended DC Operating Conditions detailed in this data sheet. Exposure to conditions beyond the operational limits for extended periods of time may affect device reliability.

DC THRESHOLDS(1)

$T_A = T_{OPR}$; V_{CC} = 5 V ± 20% (unless otherwise specified)

PARAMETER		TEST CONDITIONS	TYPICAL	TOLERANCE	UNIT
V_{TCO}	Temperature cutoff	Voltage at the TS pin	0.225 × V_{CC}	±5%	V
V_{HTF}	High-temperature fault	Voltage at the TS pin	0.25 × V_{CC}	±5%	V
V_{LTF}	Low-temperature fault	Voltage at the TS pin	0.5 × V_{CC}	±5%	V
V_{MCV}	Maximum cell voltage	Voltage at the BAT pin	2.00	±0.75%	V
V_{LBAT}	Minimum cell voltage	Voltage at the BAT pin	950	±5%	mV
V_{THERM}	TS input change for ΔT/Δt detection	Voltage at the TS pin	-V_{CC}/161	±25%	V/min
V_{SNSHI}	High threshold at SNS	Voltage at the SNS pin	50	±10	mV
V_{SNSLO}	Low threshold at SNS	Voltage at the SNS pin	–50	±10	mV
V_{SLP}	Sleep-mode input threshold	Voltage at the BAT pin	V_{CC}–1	±0.5	V
V_{RCH}	Recharge threshold	Voltage at the BAT pin	V_{MCV}–0.1	±0.02	V

(1) All voltages are relative to V_{SS} except as noted.

RECOMMENDED DC OPERATING CONDITIONS

over operating free-air temperature range (unless otherwise noted)

		TEST CONDITIONS	MIN	NOM	MAX	UNIT
V_{CC}	Supply voltage		4	5	6	V
I_{CC}	Supply current	Exclusive of external loads		0.5	1	mA
I_{CCS}	Sleep current	$V_{BAT} = V_{SLP}$			5	µA
V_{TS}	Thermistor input	V_{TS} < 0.5 V prohibited	0.5		V_{CC}	V
V_{OH}	Output high	MOD, I_{OH} = 10 mA	V_{CC}–0.4			V
V_{OL}	Output low	MOD, $\overline{LED}$, I_{OL} = 10 mA			0.2	V
I_{OZ}	High-impedance leakage current	$\overline{LED}$			5	µA
I_{snk}	Sink current	MOD, $\overline{LED}$			20	mA
R_{MTO}	Charge timer resistor		2		250	kΩ
C_{MTO}	Charge timer capacitor		0.001		1	µF

IMPEDANCE

PARAMETER		MIN	TYP	MAX	UNIT
R_{BAT}	Battery input impedance	10			MΩ
R_{TS}	TS input impedance	10			MΩ
R_{SNS}	SNS input impedance	10			MΩ

TIMING

$T_A = T_{OPR}$; V_{CC} = 5 V ± 20% (unless otherwise noted)

PARAMETER		MIN	TYP	MAX	UNIT
d_{MTO}	MTO time-base variation	–5%		5%	
f_{TRKL}	Pulse-trickle frequency	0.9	1	1.1	Hz

Copyright © 1999–2010, Texas Instruments Incorporated

Initiation and Charge Qualification

The bq2000T initiates a charge cycle when it detects

- Application of power to V_{CC}
- Battery replacement
- Exit from sleep mode
- Capacity depletion (Li-Ion only)

Immediately following initiation, the IC enters a charge-qualification mode. The bq2000T charge qualification is based on battery voltage and temperature. If the voltage on the BAT pin is less than the internal threshold, V_{LBAT}, the bq2000T enters the battery conditioning state. This condition indicates the possibility of a defective or shorted battery pack. In an attempt to revive a fully depleted pack, the bq2000T enables the MOD pin to trickle-charge at a rate of once every 1.0s. As explained in the section "Top-Off and Pulse-Trickle Maintenance Charge," the trickle pulse-width is user-selectable and is set by the value of the resistance connected between the RC pin and V_{SS}.

During charge qualification, the $\overline{LED}$ pin blinks at a 1-Hz rate, indicating the pending status of the charger.

Once battery conditioning (trickle charge) has raised the voltage on the BAT pin above V_{LBAT}, the IC enters fast charge, if the battery temperature is within the V_{LTF} to V_{HTF} range. The bq2000T stays in the battery conditioning state indefinitely and does not progress to fast charge until the voltage on the BAT pin is above V_{LBAT} and the temperature is within the V_{LTF} and V_{HTF} range. No timer is implemented during battery conditioning.

Battery Chemistry

The bq2000T detects the battery chemistry by monitoring the battery-voltage profile during the initial stage of the fast charge. If the voltage on the BAT pin rises to the internal V_{MCV} reference, the IC assumes a Li-Ion battery. Otherwise, the bq2000T assumes a NiCd/NiMH chemistry. While in the fast charge state, the $\overline{LED}$ pin is pulled low (the $\overline{LED}$ is on).

As shown in Figure 3, a resistor voltage-divider between the battery pack's positive terminal and V_{SS} scales the battery voltage. A low-pass filter then smooths out this voltage to present a clean signal to the BAT pin. In a mixed-chemistry design, a common voltage-divider is used as long as the maximum charge voltage of the nickel-based pack is below that of the Li-Ion pack. Otherwise, different scaling is required.

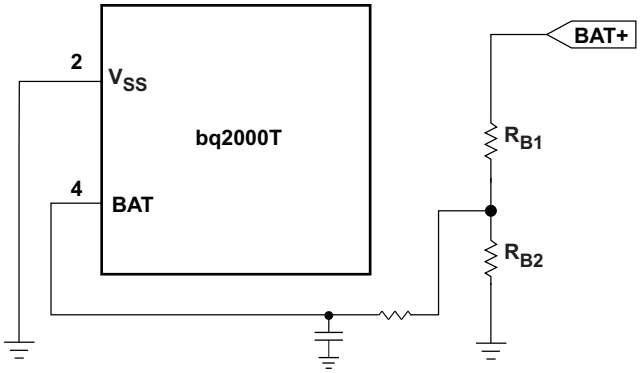

Figure 3. Battery Voltage Divider and Filter

Once the chemistry is determined, the bq2000T completes the fast charge with the appropriate charge algorithm (Table 1). The user can customize the algorithm by programming the device using an external resistor and a capacitor connected to the RC pin, as discussed in later sections.

NiCd and NiMH Batteries

Following charge qualification (which includes trickle charge, if required), the bq2000T fast-charges NiCd or NiMH batteries using a current-limited algorithm. During the fast-charge period, it monitors charge time, temperature, and voltage for adherence to the termination criteria. This monitoring is further explained in later sections. Following fast charge, the battery is topped off, if top-off is selected. The charging cycle ends with a trickle maintenance-charge that continues as long as the voltage on the BAT pin remains below V_{MCV}.

Copyright © 1999–2010, Texas Instruments Incorporated

Lithium-Ion Batteries

The bq2000T uses a two-phase fast-charge algorithm for Li-Ion batteries (Figure 4). In phase one, the bq2000T regulates constant current until V_{BAT} rises to V_{MCV}. Once $V_{BAT} = V_{MCV}$, the device identifies the cell as a Li-ion, and changes the termination method from ΔT/Δt to minimum current. The bq2000T then moves to phase two, regulates the battery with constant voltage of V_{MCV}, and terminates when the charging current falls below the I_{MIN} threshold or the timer expires (whichever happens first). A new charge cycle is started if the cell voltage falls below the V_{RCH} threshold.

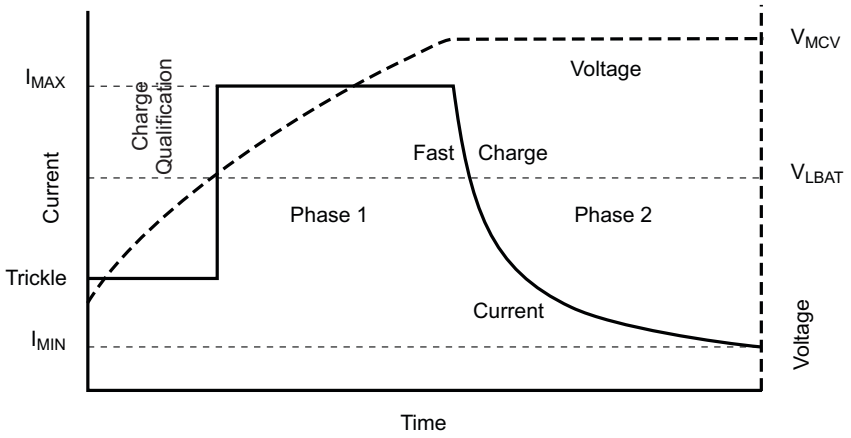

Figure 4. Lithium-Ion Charge Algorithm

During the current-regulation phase, the bq2000T monitors charge time, battery temperature, and battery voltage for adherence to the termination criteria. During the final constant-voltage stage, in addition to the charge time and temperature, it monitors the charge current as a termination criterion. There is no post-charge maintenance mode for Li-Ion batteries.

Table 1 summarizes the charging process for both Nickel and Li-Ion batteries.

Table 1. Charge Algorithm

BATTERY CHEMISTRY	CHARGE ALGORITHM
NiCd or NiMH ($V_{BAT} < V_{MCV}$ always)	1. Charge qualification 2. Trickle charge, if required 3. Fast charge (constant current) 4. Fast charge termination (rate of temperature rise, maximum charge time = 1 MTO) 5. Top-off (optional) 6. Trickle charge
Li-Ion ($V_{BAT} \leq V_{MCV}$)	1. Charge qualification 2. Trickle charge, if required 3. Fast charge (constant current) 4. Fast charge (constant voltage) 5. Charge termination (minimum current, maximum charge time = 2 MTO)

Copyright © 1999–2010, Texas Instruments Incorporated

FAST CHARGE TERMINATION

Initial Hold-Off Period

The bq2000T incorporates a user programmable hold-off period to avoid premature fast charge termination that can occur with brand new nickel cells at the very beginning of fast charge. The values of the external resistor and capacitor connected to the RC pin set the initial hold-off period. During this period, the bq2000T avoids early termination due to an initial rise in the battery temperature by disabling the rate of temperature rise (ΔT/Δt) feature. This period is fixed at the programmed value of the maximum charge time (MTO) divided by 32.

$$\text{hold-off period} = \frac{\text{MTO}}{32} \tag{1}$$

Maximum Charge Time (NiCd, NiMH, and Li-Ion)

The bq2000T sets the maximum charge-time through the RC pin. With the proper selection of external resistor and capacitor values, various time-out values may be achieved. If the timer expires while still in constant-current charging, the bq2000T assumes a Nickel chemistry and proceeds to top-off charge (if top-off is enabled) or trickle maintenance charge. Figure 5 shows a typical connection.

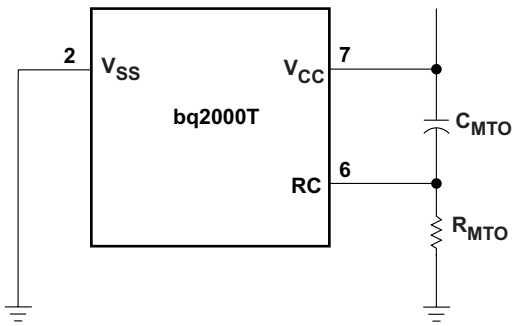

Figure 5. Typical Connection for the RC Input

The following equation shows the relationship between the R_{MTO} and C_{MTO} values and the maximum charge time (MTO) for the bq2000T:

$$\text{MTO} = R_{MTO} \times C_{MTO} \times 35{,}988 \tag{2}$$

MTO is measured in minutes, R_{MTO} in ohms, and C_{MTO} in farads. (**Note:** R_{MTO} and C_{MTO} values also determine other features of the device. See Table 4 and Table 5 for details.)

If, during fast charge, $V_{TS} > V_{LTF}$, then the timer is paused and the IC enters battery conditioning charge until $V_{TS} < V_{LTF}$. Since the IC is in the battery conditioning state, the $\overline{\text{LED}}$ flashes at the 1 Hz rate. Once $V_{TS} < V_{LTF}$, fast charge restarts and the timer resumes from where it left off with no change in total fast charge time.

For Li-Ion cells, when the battery reaches the constant-voltage phase of fast charge, the bq2000T adds an additional MTO of time to whatever time was left over from the constant current fast charge timer. Thus, the pack could spend longer than 1 MTO in constant-voltage fast charge, but is always limited to 1 MTO in constant-current fast charge. This feature provides the additional charge time required for Li-Ion cells.

For Nickel cells, if top-off is enabled, the timer is reset on the completion of fast charge before beginning top-off charge.

Copyright © 1999–2010, Texas Instruments Incorporated

Maximum Temperature (NiCd, NiMH, Li-Ion)

A negative-coefficient thermistor, referenced to V_{SS} and placed in thermal contact with the battery, may be used as a temperature-sensing device. Figure 6 shows a typical temperature-sensing circuit.

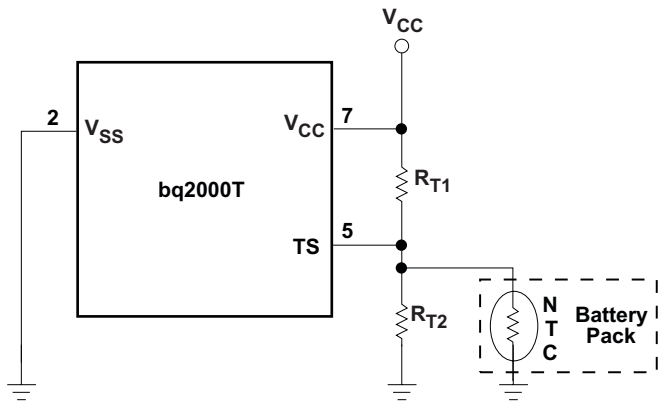

Figure 6. Temperature Monitoring Configuration

During fast charge, the bq2000T compares the battery temperature to an internal high-temperature cutoff threshold, V_{TCO}, and a low-temperature threshold, V_{LTF}. During fast charge only, the V_{HTF} fault comparator is disabled. When the voltage at the TS pin is lower than V_{TCO}, the bq2000T terminates fast charge, moves to the charge suspended state, and turns off the $\overline{LED}$. When V_{TS} rises above V_{HTF}, the bq2000T resumes charging in the trickle maintenance charge state, per Figure 2. In fast charge (either constant current or constant voltage fast charge), when the voltage on the TS pin is higher than V_{LTF}, the charger enters the battery conditioning state, as described in the previous section. Fast charge is resumed when V_{TS} is less than V_{LTF}.

Rate of Temperature Rise (NiCd, NiMH)

The bq2000T uses a rate of temperature rise ($\Delta T/\Delta t$) scheme to terminate fast charge for NiCd and NiMH batteries. During fast charge, it samples the TS pin voltage every 8 seconds and compares it to the value measured 2 samples earlier. This feature terminates fast charge if this voltage declines at a rate of $V_{CC}/161$ (V/min). Figure 6 shows a typical connection diagram. In preparation for sampling the TS pin voltage, the bq2000T briefly turns off most circuits (the MOD and RC pins both go low) in order to get the cleanest possible, noise-free measurement. While the monitoring of the TS pin voltage is continuous, the sampling of the TS pin voltage with the internal ADC only occurs during the constant current regulation phase of fast charge. If the cell voltage reaches V_{MCV}, the pack is assumed to be Li-Ion and the TS pin voltage sampling is disabled, as $\Delta T/\Delta t$ is not a termination criterion for Lithium cells.

Minimum Current (Li-Ion Only)

The bq2000T monitors the charging current during the voltage-regulation phase of Li-Ion batteries. Fast charge is terminated when the current is tapered off to 7% of the maximum charging current. Note that this threshold is different for the bq2000.

Once constant-current fast charge has ended, the bq2000T either measures the value of the C_{MTO} capacitor (in the case of Nickel batteries) and then proceeds to either top-off or trickle maintenance charge or simply completes the constant-voltage stage of fast charge (in the case of a Li-Ion cell).

Top-Off and Pulse-Trickle Maintenance Charge

An optional top-off charge is available for NiCd or NiMH batteries. Top-off may be desirable on batteries that have a tendency to terminate charge before reaching full capacity. To enable this option, the capacitance value of C_{MTO} connected between the RC pin and V_{CC} (Figure 5) should be greater than 0.13 µF , and the value of the resistor connected to this pin should be less than 250 kΩ . To disable top-off, the capacitance value should be less than 0.07 µF. The tolerance of the capacitor needs to be taken into account in component selection.

Copyright © 1999–2010, Texas Instruments Incorporated

Once top-off is started, the timer is reset and top-off proceeds until the timer expires, V_{MCV} is reached, or there is a temperature fault. During top-off, current is delivered to the battery in pulses that occur each second. The fixed pulse width allows an average current of 1/16 of the fast charge current to be delivered to the battery every second. The $\overline{LED}$ is always off during top-off and trickle maintenance charge.

During top-off, there are three different temperature faults that can occur. If $V_{TS} > V_{LTF}$, top-off is suspended, the timer is paused, and trickle charge is started. When V_{TS} falls below V_{LTF}, top-off is resumed. If $V_{TS} < V_{HTF}$, all charging stops, but the timer keeps counting. When $V_{TS} > V_{HTF}$, top-off is resumed, if there is still time remaining on the timer. If there is not time left, trickle maintenance charge is entered. If $V_{TS} < V_{TCO}$, all charging stops. Only trickle maintenance charge may resume after $V_{TS} > V_{HTF}$.

Following top-off, the bq2000T trickle-charges the battery by enabling the MOD pin to charge at a rate of once every 1.0 second. The trickle pulse-width is user-selectable and is set by the value of the resistor R_{MTO}, connected between the RC pin and V_{SS}. Figure 7 shows the relationship between the trickle pulse-width and the value of R_{MTO}. The typical tolerance of the pulsewidth below 150 kΩ is ±10%.

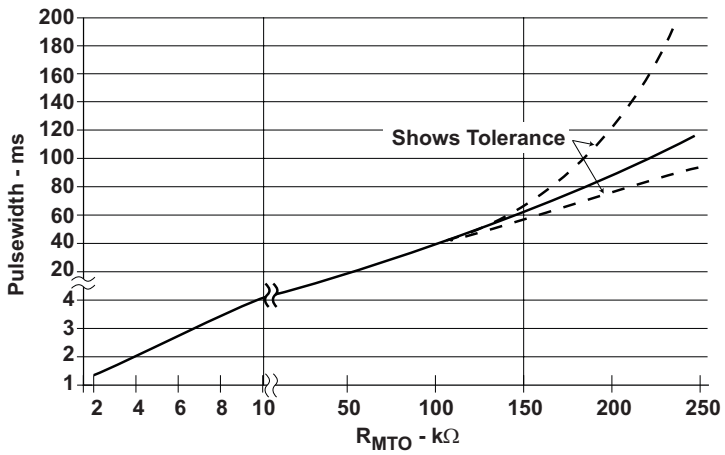

Figure 7. Relationship Between Trickle Pulse-Width and Value of R_{MTO}

Note that with an R_{MTO} value around 150 kΩ, the trickle charge pulse width is nearly identical to the top-off pulse width of 62.5 ms (1/16 of a second for a 1A fast charge current). With R_{MTO} values near 150 kΩ, it can be difficult to tell which state the IC is in (top-off or trickle charge). The best way to tell if the bq2000T is in top-off or trickle charge is to look at the RC pin when the temperature is between the LTF and HTF. In top-off, the RC pin is counting and has a sawtooth waveform on it. In trickle charge, there is no timer and the RC pin is at a DC value.

The RC pin contains valuable information in determining what state the bq2000T is in, since it always operates in one of three modes. If the RC pin is low (around V_{SS} potential), the IC is in sleep mode. (If the RC pin is low for brief instants during fast charge, the bq2000T is sampling the TS pin for ΔT/Δt). If the RC pin is at some DC value (usually around 1 V to 2 V), then the IC has paused the timer or the timer is inactive. If the RC pin is a sawtooth waveform (similar to Figure 15), then the timer is running and the RC pin is considered "active." Lastly, the RC pin can be loaded by too large of a C or too small of an R. This sometimes makes the usual sawtooth waveform look like a triangle waveform on an oscilloscope (the rise time is lengthened), or the RC signal could have the appearance of being clipped (flat top or bottom). The timer is unreliable under these conditions and the bq2000T should not be operated in this manner. Table 2 summarizes the different states of the RC pin.

Table 2. RC Pin Status

bq2000T CHARGE STATE	TS PIN STATE	RC PIN BEHAVIOR
Battery absent	N/A	1-V to 2-V DC level
Sleep mode	N/A	Ground (V_{SS})
Charge qualification (including battery conditioning (trickle charge) and charge suspended)	N/A	1-V to 2-V DC level

Copyright © 1999–2010, Texas Instruments Incorporated

Table 2. RC Pin Status (continued)

bq2000T CHARGE STATE	TS PIN STATE	RC PIN BEHAVIOR
Fast charge (current and voltage regulation)	$V_{TS} < V_{LTF}$	Active
	$V_{TS} > V_{LTF}$ (in battery conditioning state)	1-V to 2-V DC level (timer is paused and resumes when $V_{TS} < V_{LTF}$)
Top-off charge	$V_{TS} > V_{LTF}$ (in trickle maintenance charge state)	1-V to 2-V DC level (timer is paused and resumes when $V_{TS} < V_{LTF}$)
	$V_{LTF} > V_{TS} > V_{HTF}$	Active
	$V_{HTF} > V_{TS} > V_{TCO}$	Active (timer is still counting, even though charging is suspended)
Trickle maintenance charge (after fast charge)	N/A	1-V to 2-V DC level
Charge complete	N/A	Active

Both top-off and trickle maintenance charge are terminated and the pack never receives any more charge (until a charge initialization occurs) if the voltage on the BAT pin reaches V_{MCV}. During trickle maintenance charge, charging is suspended if $V_{TS} < V_{HTF}$. It resumes when $V_{TS} > V_{HTF}$. The bq2000T is designed to remain in trickle maintenance charge forever (excluding the two faults just mentioned) in order to keep a Nickel pack full.

Charge Current Control

The bq2000T implements a hysteretic control loop that regulates the current being delivered to the battery pack to a user programmable value that is set by the value of the R_{SNS} resistor. A second, outer control loop reduces the average current delivered to the pack in order to clamp the voltage at the BAT pin to a maximum of V_{MCV}. The bq2000T controls the MOD pin to regulate the current and voltage of the pack. The bq2000T monitors charge current at the SNS input by sensing the voltage drop across a sense-resistor, R_{SNS}, in series with the battery pack. See Figure 8 for a typical current-sensing circuit.

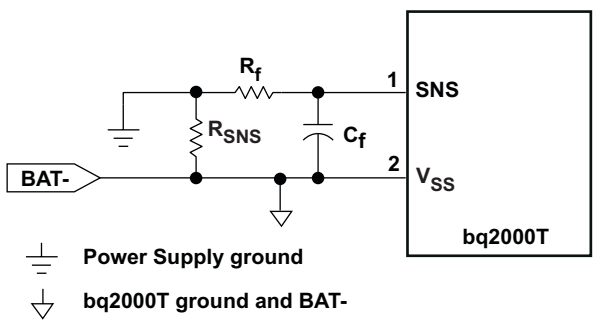

Figure 8. Current-Sensing Circuit

R_{SNS} is sized to provide the desired fast-charge current (I_{MAX}).

$$I_{MAX} = \frac{0.05}{R_{SNS}} \tag{3}$$

If the voltage at the SNS pin is greater than V_{SNSLO} or less than V_{SNSHI}, the bq2000T switches the MOD output high to pass charge current to the battery. When the SNS voltage is less than V_{SNSLO} or greater than V_{SNSHI}, the bq2000T switches the MOD output low to shut off charging current to the battery. A hysteresis capacitor (C_{HYS}) is required between the C_{MOD} pin and the SNS pin to add a healthy amount of hysteresis to the current sense signal. Typical hysteresis values are between 5 mV and 25 mV. The amount of hysteresis can be calculated by examining the capacitive divider formed by C_{HYS} and C_f.

$$\text{Hysteresis (V)} = V_{CC} \times \frac{C_{HYS}}{(C_{HYS} + C_f)} \tag{4}$$

Being a hysteretic controller, the switching frequency of the bq2000T is determined by the values of several of the external circuit components. The components that affect the switching frequency are: input voltage, R_{SNS} value, inductor value, hysteresis capacitor value (C_{HYS}), and the value of the filter on the current sense signal (R_f and C_f values). R_f and C_f have the most impact on the switching frequency and are also the components that are easiest to change to adjust the frequency, as they do not affect anything else in the circuit (besides, of course, the cleanliness and quality of the current sense signal being fed to the bq2000T). In general, increasing the input voltage and/or inductor value or decreasing C_{HYS} and/or the $R_f \times C_f$ filter corner frequency increases the switching frequency. Figure 9 and Figure 10 show empirical data on the variation in switching frequency based on adjusting R_f and C_f. This data was taken with an input voltage of 12 V, inductor value of 220 µH, R_{SNS} value of 50 mΩ, and C_{HYS} value of 4.7 pF. Typical switching frequencies for the bq2000T are between 100 and 200 kHz, though it is possible to achieve switching frequencies in excess of 300 kHz.

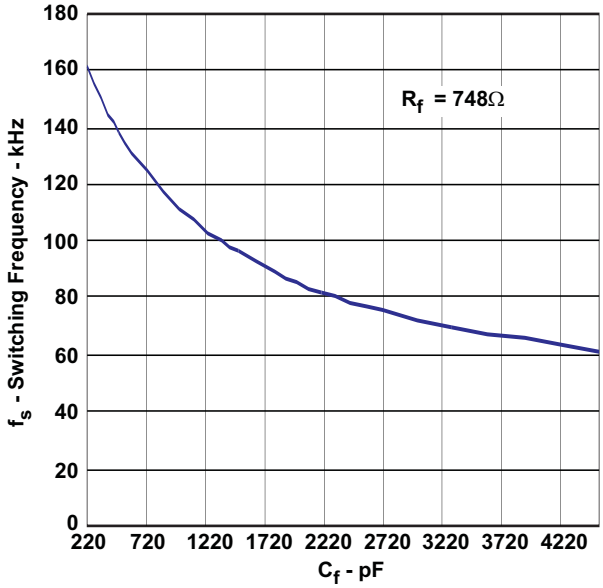

Figure 9. Switching Frequency vs Capacitance

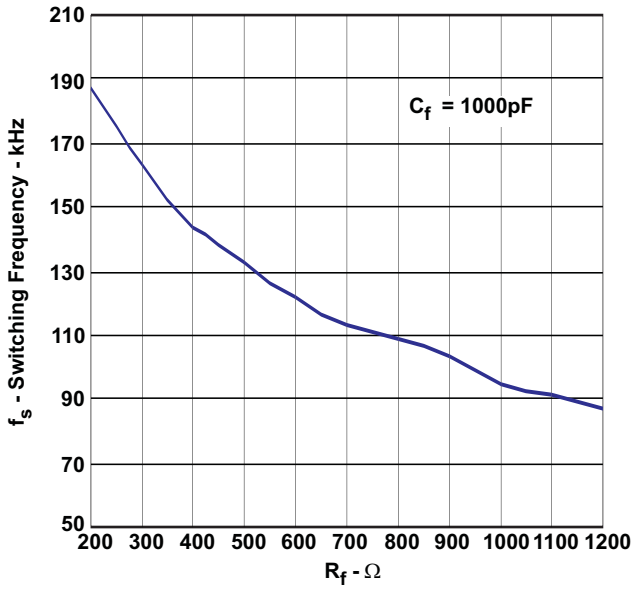

Figure 10. Switching Frequency vs Resistance

Copyright © 1999–2010, Texas Instruments Incorporated

BATTERY VOLTAGE INPUT

As shown in Figure 3, a resistor voltage-divider between the battery pack's positive terminal and V_{SS} scales the battery voltage measured at the BAT pin.

For Li-Ion battery packs, the resistor values R_{B1} and R_{B2} are calculated by the following equation:

$$\frac{R_{B1}}{R_{B2}} = \left(N \times \frac{V_{CELL}}{V_{MCV}}\right) - 1 \tag{5}$$

where N is the number of cells in series and V_{CELL} is the manufacturer-specified charging voltage. R_{B1} + R_{B2} should be at least 200 kΩ and no more than 1 MΩ.

A NiCd or NiMH battery pack consisting of N series cells may benefit by the selection of the R_{B1} value to be N–1 times larger than the R_{B2} value. This sets the per cell regulation voltage (V_{CELL}) equal to V_{MCV}. It is critical that V_{CELL} be set high enough that the nickel pack not reach voltage regulation, thus allowing proper termination by ΔT/Δt. The typical V_{CELL} setting for a nickel pack is between 1.7 V and 2 V.

In a mixed-chemistry design, a common voltage-divider is used as long as the maximum charge voltage of the nickel-based pack is below that of the Li-Ion pack. Otherwise, different scaling is required. See Figure 11 for an example.

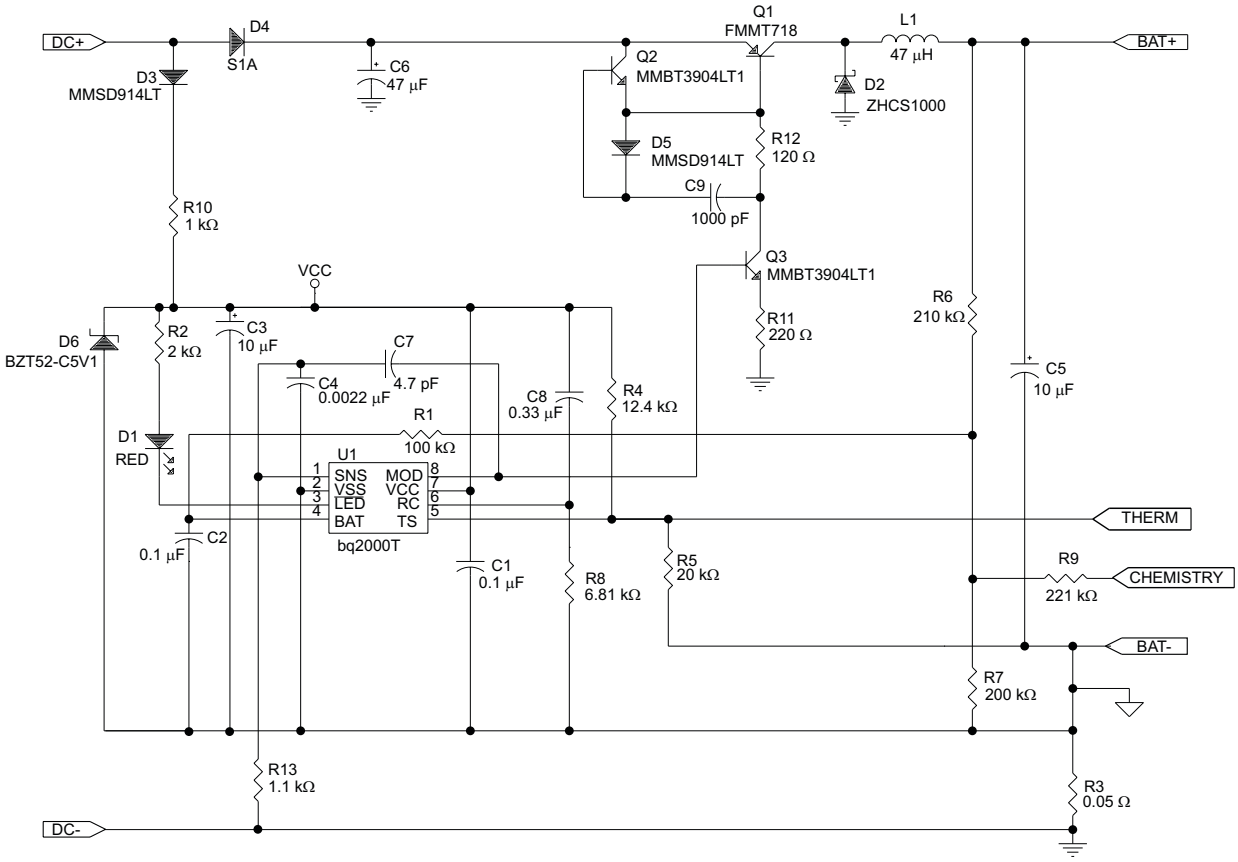

NOTES: 1. For Li-Ion, CHEMISTRY is left floating.
For NiCd/NiMH, CHEMISTRY is tied to BAT-
2. DC input voltage: 9–16V
3. Charge current: 1A
4. L1: 3L Global P/N PKSMD-1005-470K-1A

Figure 11. Single-Cell Li-Ion, 3-Cell NiCd/NiMH 1-A Charger

TEMPERATURE MONITORING

The bq2000T measures the temperature by the voltage at the TS pin. This voltage is typically generated by a negative-temperature-coefficient thermistor. The bq2000T compares this voltage against its internal threshold voltages to determine if charging is safe. These thresholds are the following:

- High-temperature cutoff voltage: $V_{TCO} = 0.225 \times V_{CC}$. This voltage corresponds to the maximum temperature (TCO) at which any charging is allowed. The bq2000T terminates charging if the voltage on the TS pin falls below V_{TCO}.
- High-temperature fault voltage: $V_{HTF} = 0.25 \times V_{CC}$. This voltage corresponds to a maximum allowed pack temperature (HTF) in all states except for fast charge. During fast charge, HTF faults are disabled to allow for a normal increase in pack temperature.
- Low-temperature fault voltage: $V_{LTF} = 0.5 \times V_{CC}$. This voltage corresponds to the minimum temperature (LTF) at which fast charging or top-off is allowed. If the voltage on the TS pin rises above V_{LTF}, the bq2000T suspends either fast charge or top-off and begins a trickle charge. When the voltage falls back below V_{LTF}, fast charge or top-off resumes from the point where suspended. If $V_{TS} > V_{LTF}$, the charger is always in trickle charge.

Table 3 summarizes these various conditions.

Table 3. Temperature-Monitoring Conditions and Actions

TEMPERATURE	CONDITION	ACTION
$V_{TS} > V_{LTF}$	Cold battery – checked at all times	During charge qualification, no effect
		During fast charge, suspends fast charge and moves into charge qualification, pauses timer, and flashes $\overline{LED}$
		During top-off, suspends top-off and moves into trickle maintenance charge and pauses timer
		During trickle maintenance charge, no effect
$V_{HTF} < V_{TS} < V_{LTF}$	Optimal charging range	Allows all stages of charging
$V_{TS} < V_{HTF}$	Hot battery – checked at all times, except during fast charge	During charge qualification, stops charging
		During fast charge, no effect
		During top-off, stops charging
		During trickle maintenance charge, stops charging
$V_{TS} < V_{TCO}$	Battery exceeding maximum allowable temperature – checked at all times	During charge qualification, stops charging
		During fast charge, terminates fast charge and stops charging, turns off $\overline{LED}$
		During top-off, terminates top-off and stops charging
		During trickle maintenance charge, stops charging

Table 4. Summary of NiCd or NiMH Charging Characteristics

PARAMETER	VALUE(1)
Maximum cell voltage (V_{MCV})	2 V
Minimum pre-charge qualification voltage (V_{LBAT})	950 mV
High-temperature cutoff voltage (V_{TCO})	$0.225 \times V_{CC}$
High-temperature fault voltage (V_{HTF})	$0.25 \times V_{CC}$
Low-temperature fault voltage (V_{LTF})	$0.5 \times V_{CC}$
bq2000T fast-charge maximum time out (MTO)	$R_{MTO} \times C_{MTO} \times 35{,}988$
Fast-charge charging current (I_{MAX})	$0.05/R_{SNS}$
Hold-off period	MTO/32
Top-off charging current (optional)	$I_{MAX}/16$
Top-off period (optional)	MTO
Trickle-charge frequency	1 Hz
Trickle-charge pulse-width	See Figure 7

(1) See the DC Thresholds Specification for details.

Copyright © 1999–2010, Texas Instruments Incorporated

Table 5. Summary of Li-Ion Charging Characteristics

PARAMETER	VALUE(1)
Maximum cell voltage (V_{MCV})	2 V
Minimum pre-charge qualification voltage (V_{LBAT})	950 mV
High-temperature cutoff voltage (V_{TCO})	0.225 × V_{CC}
High-temperature fault voltage (V_{HTF})	0.25 × V_{CC}
Low-temperature fault voltage (V_{LTF})	0.5 × V_{CC}
bq2000T fast-charge maximum time out (MTO)	2 × R_{MTO} × C_{MTO} × 35,988 (See Maximum Charge Time section for full explanation)
Fast-charge charging current (I_{MAX})	0.05/R_{SNS}
Hold-off period	MTO/32
Minimum current (for fast-charge termination)	I_{MAX}/14
Trickle-charge frequency (before fast charge only)	1 Hz
Trickle-charge pulse-width (before fast charge only)	See Figure 7

(1) See the DC Thresholds Specification for details.

Charge Status Display

The charge status is indicated by open-drain output $\overline{\text{LED}}$. Table 6 summarizes the display output of the bq2000T. A temperature fault or timer expiring changes the charge state immediately (according to Figure 2) and thus changes the $\overline{\text{LED}}$ status immediately and accordingly.

Table 6. Charge Status Display

bq2000T CHARGE STATE	$\overline{\text{LED}}$ STATUS
Charge qualification (including battery conditioning and charge suspended)	1-Hz flash
Fast charge (current and voltage regulation)	Low
Top-off charge	High impedance
Trickle maintenance charge (after fast charge)	
Charge complete	
Battery absent	
Sleep mode	

Sleep Mode

The bq2000T features a sleep mode for low power consumption. This mode is enabled when the voltage at the BAT pin is above the low-power-mode threshold, V_{SLP}. During sleep mode, the bq2000T shuts down all unnecessary internal circuits, drives the $\overline{\text{LED}}$ output to high-impedance state, and drives the MOD pin low. Restoring BAT below the V_{MCV} threshold initiates the IC and starts a fast-charge cycle. Normally, the bq2000T only enters sleep mode when there is no battery connected on the output and the charger is idling with nothing to charge. In addition, V_{IN} needs to be high enough such that when V_{IN} is present on the output, V_{BAT} would be greater than V_{SLP}. In sleep mode, the output voltage decays to V_{MCV} at which point the bq2000T turns on and pulses the MOD pin several times. With no battery connected, the output rises to near V_{IN} at which point the bq2000T re-enters sleep mode. During sleep mode, the RC pin is at V_{SS} potential. A typical sleep mode waveform is shown in Figure 18.

Copyright © 1999–2010, Texas Instruments Incorporated

TYPICAL CHARACTERISTICS

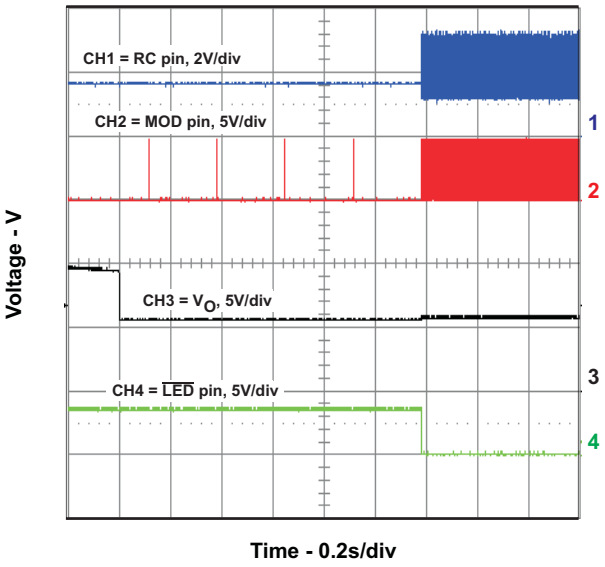

Figure 12. bq2000T Start-up on Battery Insertion

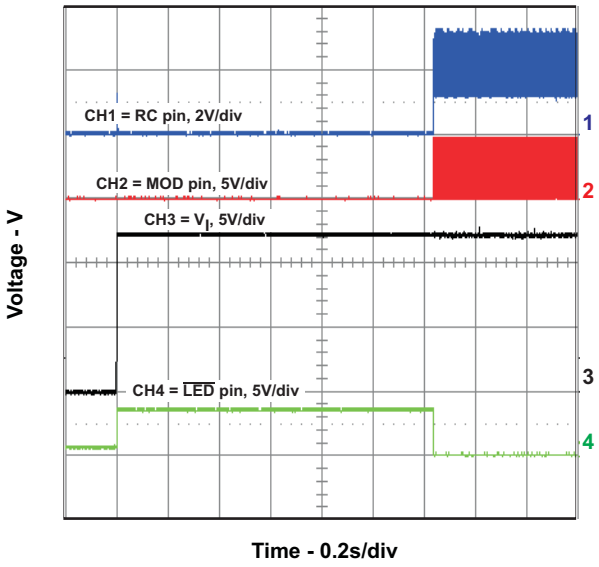

Figure 13. bq2000T Start-up on Vin

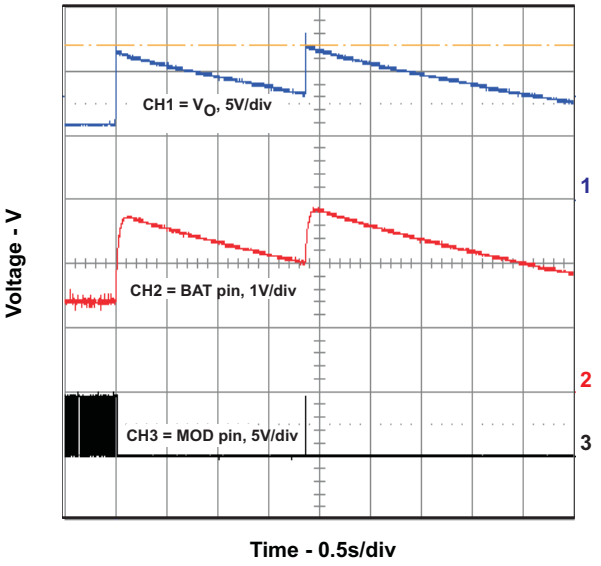

Figure 14. Battery Removal During Fast Charge

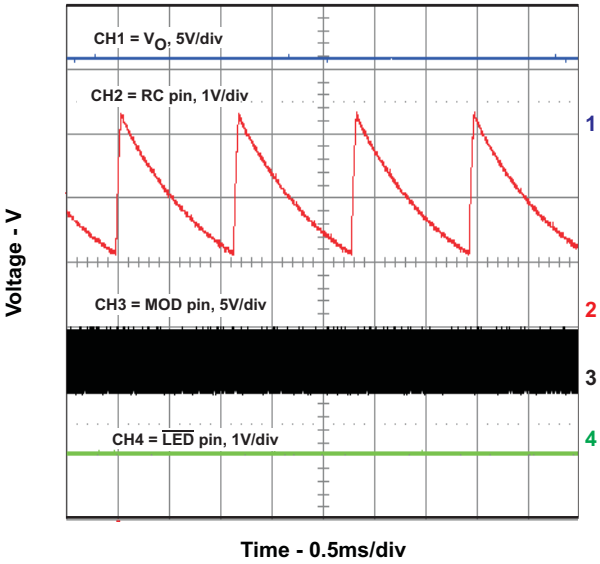

Figure 15. bq2000T in Fast Charge

Copyright © 1999–2010, Texas Instruments Incorporated

TYPICAL CHARACTERISTICS (continued)

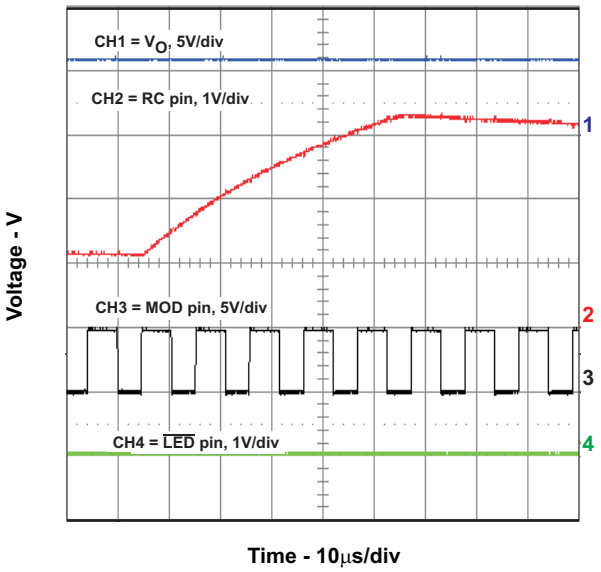

Figure 16. bq2000T in Fast Charge

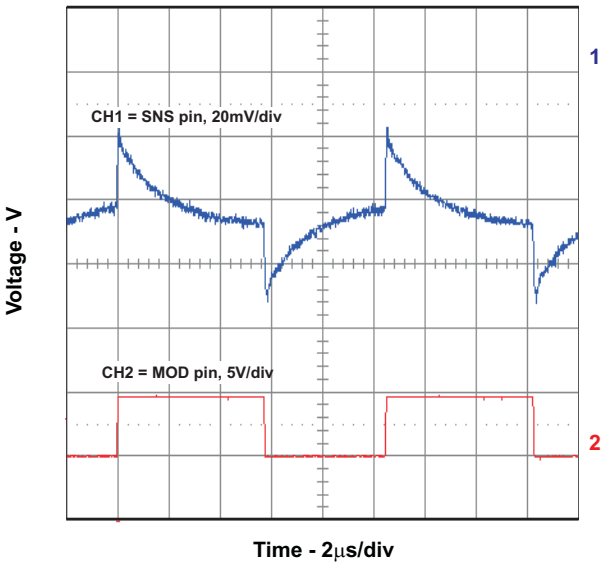

Figure 17. bq2000T Fast Charge SNS and MOD Waveforms

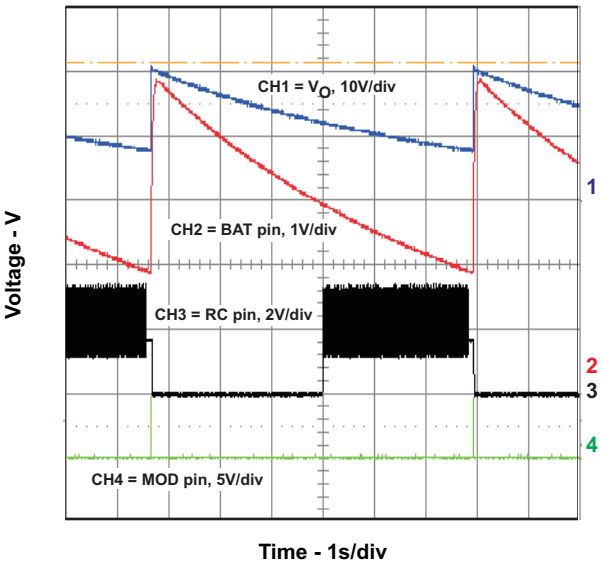

Figure 18. bq2000T Cycling In and Out of Sleep Mode (No battery present)

REVISION HISTORY

Changes from Original (January 1999) to Revision 1	Page
• Changed the device status From: Preliminary To: Final	1
• Added state diagram	4
• Changed minimum current termination From: 14% To: 7%	9
• Changed capacitor value for enabling top-off From: 0.13 µF To: 0.26 µF	9
• Changed Figure 11	13
• Changed V_{TCO}	14
• Changed V_{HTF}	14
• Changed V_{LTF}	14

Changes from Revision 1 (May 1999) to Revision 2	Page
• Changed minimum current (for fast-charge termination) From: $I_{MAX}/7$ To: $I_{MAX}/14$	15

Changes from Revision 2 (February 2000) to Revision 3	Page
• Changed ordering information	1
• Changed Figure 1 - connection added between TS and ADC and connection deleted between BAT and ADC	3
• Changed Figure 2 - battery temperature From: (checked at all times) To: (sampled every 16 seconds for ΔT/Δt)	4

Changes from Revision 3 (February 2001) to Revision 4	Page
• Changed resistor value From: 15 kΩ To: 250 kΩ	9

Changes from Revision 4 (January 2008) to Revision D	Page
• Changed the data sheet throughout	1

Copyright © 1999–2010, Texas Instruments Incorporated

PACKAGING INFORMATION

Orderable Device	Status (1)	Package Type	Package Drawing	Pins	Package Qty	Eco Plan (2)	Lead finish/ Ball material (6)	MSL Peak Temp (3)	Op Temp (°C)	Device Marking (4/5)	Samples
BQ2000TPN-B5	ACTIVE	PDIP	P	8	50	RoHS & Green	NIPDAU	N / A for Pkg Type	-20 to 70	2000T-B5	Samples
BQ2000TPW	ACTIVE	TSSOP	PW	8	150	RoHS & Green	NIPDAU	Level-2-260C-1 YEAR	-20 to 70	BQ20T	Samples
BQ2000TPWR	ACTIVE	TSSOP	PW	8	2000	RoHS & Green	NIPDAU	Level-2-260C-1 YEAR	-20 to 70	BQ20T	Samples
BQ2000TSN-B5	ACTIVE	SOIC	D	8	75	RoHS & Green	NIPDAU	Level-1-260C-UNLIM	-20 to 70	2000T	Samples
BQ2000TSN-B5TR	ACTIVE	SOIC	D	8	2500	RoHS & Green	NIPDAU	Level-1-260C-UNLIM	-20 to 70	2000T	Samples
BQ2000TSN-B5TRG4	ACTIVE	SOIC	D	8	2500	RoHS & Green	NIPDAU	Level-1-260C-UNLIM	-20 to 70	2000T	Samples

(1) The marketing status values are defined as follows:
ACTIVE: Product device recommended for new designs.
LIFEBUY: TI has announced that the device will be discontinued, and a lifetime-buy period is in effect.
NRND: Not recommended for new designs. Device is in production to support existing customers, but TI does not recommend using this part in a new design.
PREVIEW: Device has been announced but is not in production. Samples may or may not be available.
OBSOLETE: TI has discontinued the production of the device.

(2) **RoHS:** TI defines "RoHS" to mean semiconductor products that are compliant with the current EU RoHS requirements for all 10 RoHS substances, including the requirement that RoHS substance do not exceed 0.1% by weight in homogeneous materials. Where designed to be soldered at high temperatures, "RoHS" products are suitable for use in specified lead-free processes. TI may reference these types of products as "Pb-Free".
RoHS Exempt: TI defines "RoHS Exempt" to mean products that contain lead but are compliant with EU RoHS pursuant to a specific EU RoHS exemption.
Green: TI defines "Green" to mean the content of Chlorine (Cl) and Bromine (Br) based flame retardants meet JS709B low halogen requirements of <=1000ppm threshold. Antimony trioxide based flame retardants must also meet the <=1000ppm threshold requirement.

(3) MSL, Peak Temp. - The Moisture Sensitivity Level rating according to the JEDEC industry standard classifications, and peak solder temperature.

(4) There may be additional marking, which relates to the logo, the lot trace code information, or the environmental category on the device.

(5) Multiple Device Markings will be inside parentheses. Only one Device Marking contained in parentheses and separated by a "~" will appear on a device. If a line is indented then it is a continuation of the previous line and the two combined represent the entire Device Marking for that device.

(6) Lead finish/Ball material - Orderable Devices may have multiple material finish options. Finish options are separated by a vertical ruled line. Lead finish/Ball material values may wrap to two lines if the finish value exceeds the maximum column width.

Important Information and Disclaimer: The information provided on this page represents TI's knowledge and belief as of the date that it is provided. TI bases its knowledge and belief on information provided by third parties, and makes no representation or warranty as to the accuracy of such information. Efforts are underway to better integrate information from third parties. TI has taken and continues to take reasonable steps to provide representative and accurate information but may not have conducted destructive testing or chemical analysis on incoming materials and chemicals. TI and TI suppliers consider certain information to be proprietary, and thus CAS numbers and other limited information may not be available for release.

In no event shall TI's liability arising out of such information exceed the total purchase price of the TI part(s) at issue in this document sold by TI to Customer on an annual basis.

TAPE AND REEL INFORMATION

REEL DIMENSIONS

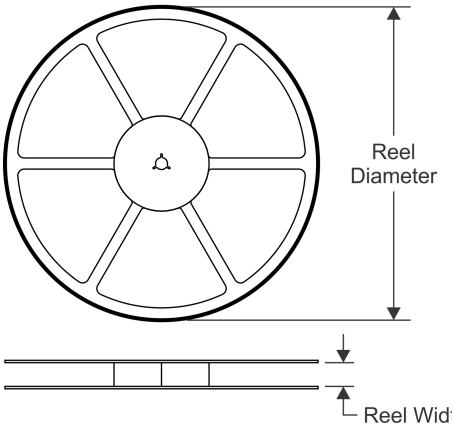

TAPE DIMENSIONS

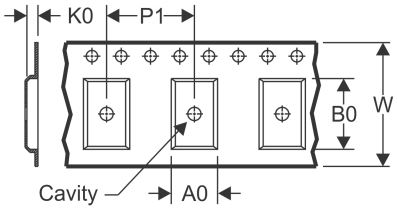

A0	Dimension designed to accommodate the component width
B0	Dimension designed to accommodate the component length
K0	Dimension designed to accommodate the component thickness
W	Overall width of the carrier tape
P1	Pitch between successive cavity centers

QUADRANT ASSIGNMENTS FOR PIN 1 ORIENTATION IN TAPE

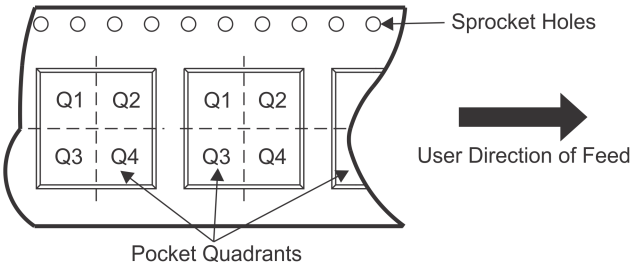

*All dimensions are nominal

Device	Package Type	Package Drawing	Pins	SPQ	Reel Diameter (mm)	Reel Width W1 (mm)	A0 (mm)	B0 (mm)	K0 (mm)	P1 (mm)	W (mm)	Pin1 Quadrant
BQ2000TPWR	TSSOP	PW	8	2000	330.0	12.4	7.0	3.6	1.6	8.0	12.0	Q1
BQ2000TSN-B5TR	SOIC	D	8	2500	330.0	12.4	6.4	5.2	2.1	8.0	12.0	Q1

TAPE AND REEL BOX DIMENSIONS

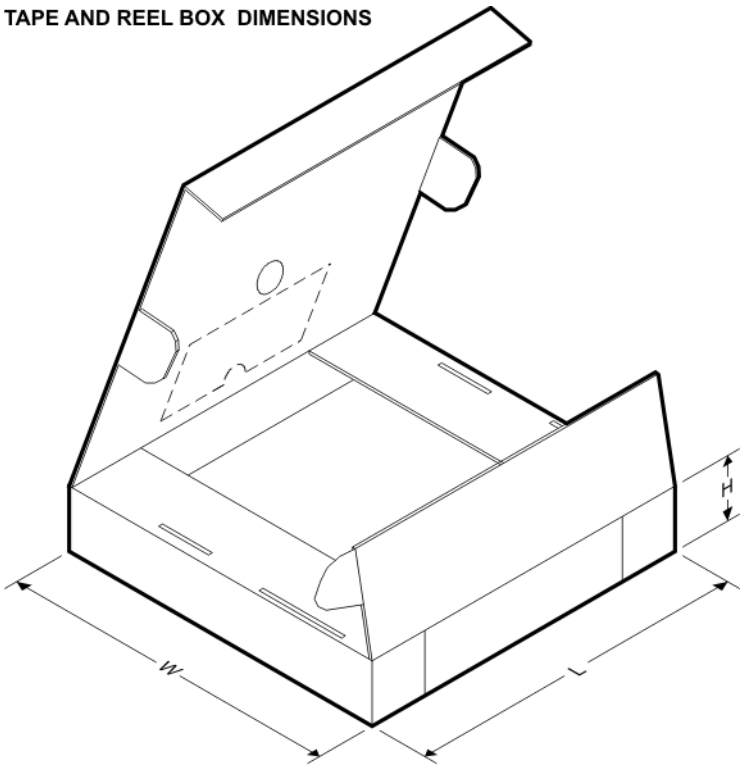

*All dimensions are nominal

Device	Package Type	Package Drawing	Pins	SPQ	Length (mm)	Width (mm)	Height (mm)
BQ2000TPWR	TSSOP	PW	8	2000	367.0	367.0	35.0
BQ2000TSN-B5TR	SOIC	D	8	2500	367.0	367.0	35.0

TUBE

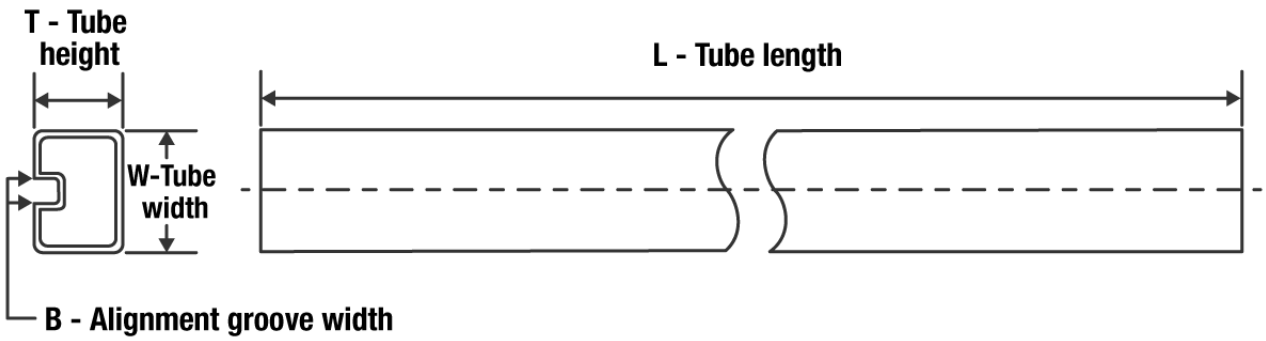

*All dimensions are nominal

Device	Package Name	Package Type	Pins	SPQ	L (mm)	W (mm)	T (µm)	B (mm)
BQ2000TPN-B5	P	PDIP	8	50	506	13.97	11230	4.32
BQ2000TPW	PW	TSSOP	8	150	508	8.5	3250	2.8
BQ2000TSN-B5	D	SOIC	8	75	506.6	8	3940	4.32

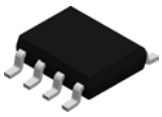

PACKAGE OUTLINE

D0008A

SOIC - 1.75 mm max height

SMALL OUTLINE INTEGRATED CIRCUIT

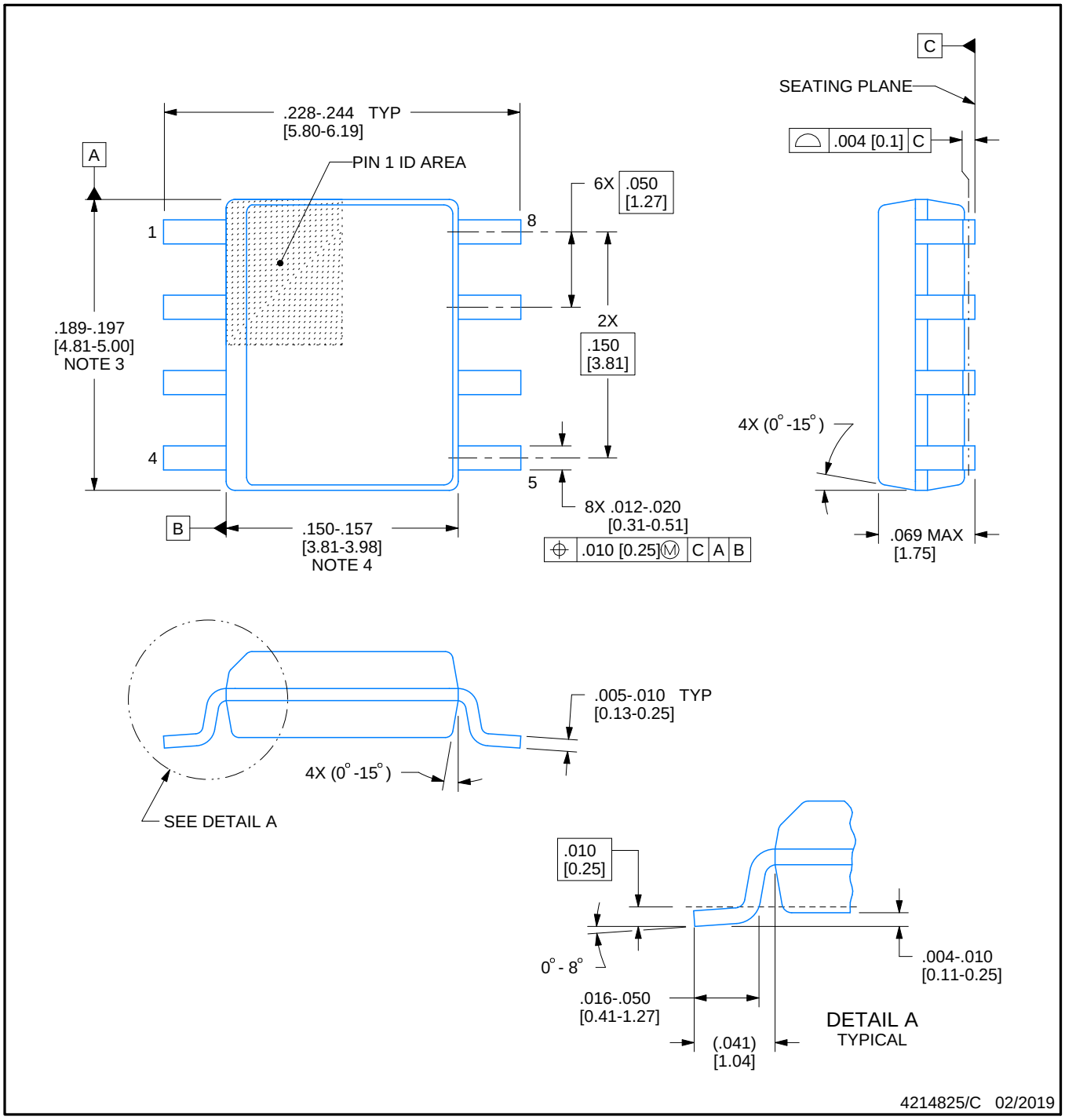

NOTES:

1. Linear dimensions are in inches [millimeters]. Dimensions in parenthesis are for reference only. Controlling dimensions are in inches. Dimensioning and tolerancing per ASME Y14.5M.
2. This drawing is subject to change without notice.
3. This dimension does not include mold flash, protrusions, or gate burrs. Mold flash, protrusions, or gate burrs shall not exceed .006 [0.15] per side.
4. This dimension does not include interlead flash.
5. Reference JEDEC registration MS-012, variation AA.

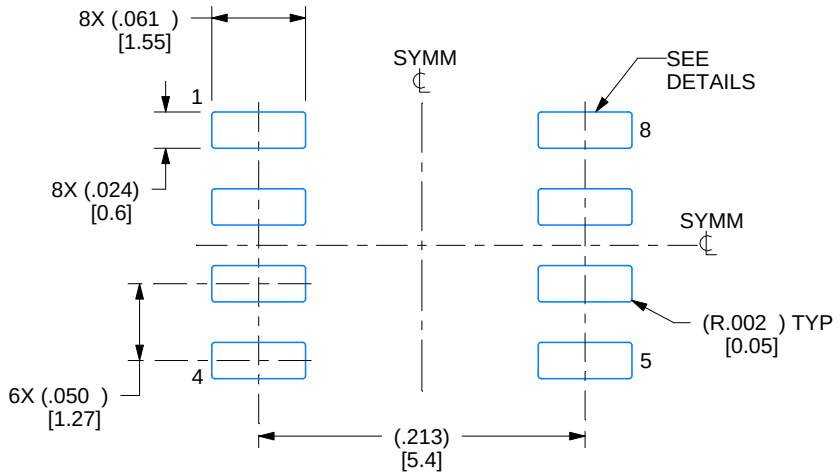

LAND PATTERN EXAMPLE
EXPOSED METAL SHOWN
SCALE:8X

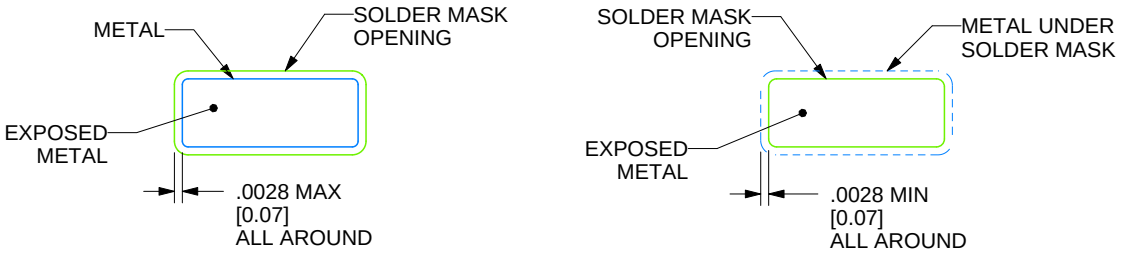

SOLDER MASK DETAILS

4214825/C 02/2019

NOTES: (continued)

6. Publication IPC-7351 may have alternate designs.
7. Solder mask tolerances between and around signal pads can vary based on board fabrication site.

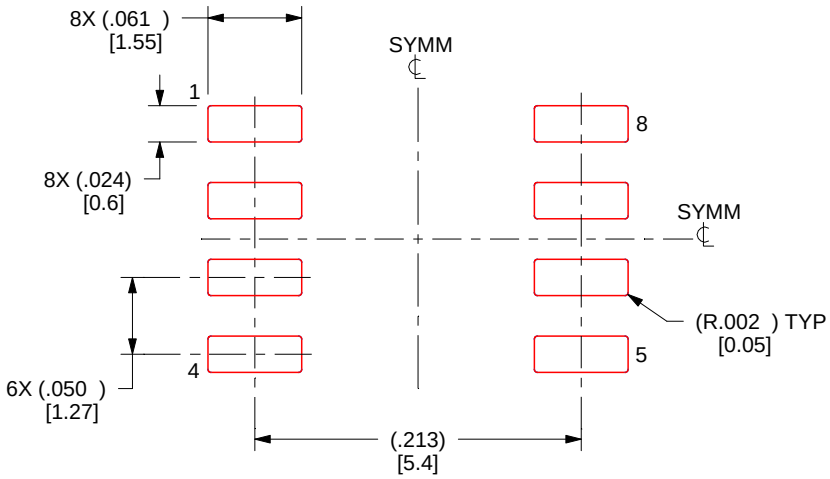

SOLDER PASTE EXAMPLE
BASED ON .005 INCH [0.125 MM] THICK STENCIL
SCALE:8X

4214825/C 02/2019

NOTES: (continued)

8. Laser cutting apertures with trapezoidal walls and rounded corners may offer better paste release. IPC-7525 may have alternate design recommendations.
9. Board assembly site may have different recommendations for stencil design.

P (R–PDIP–T8) PLASTIC DUAL–IN–LINE PACKAGE

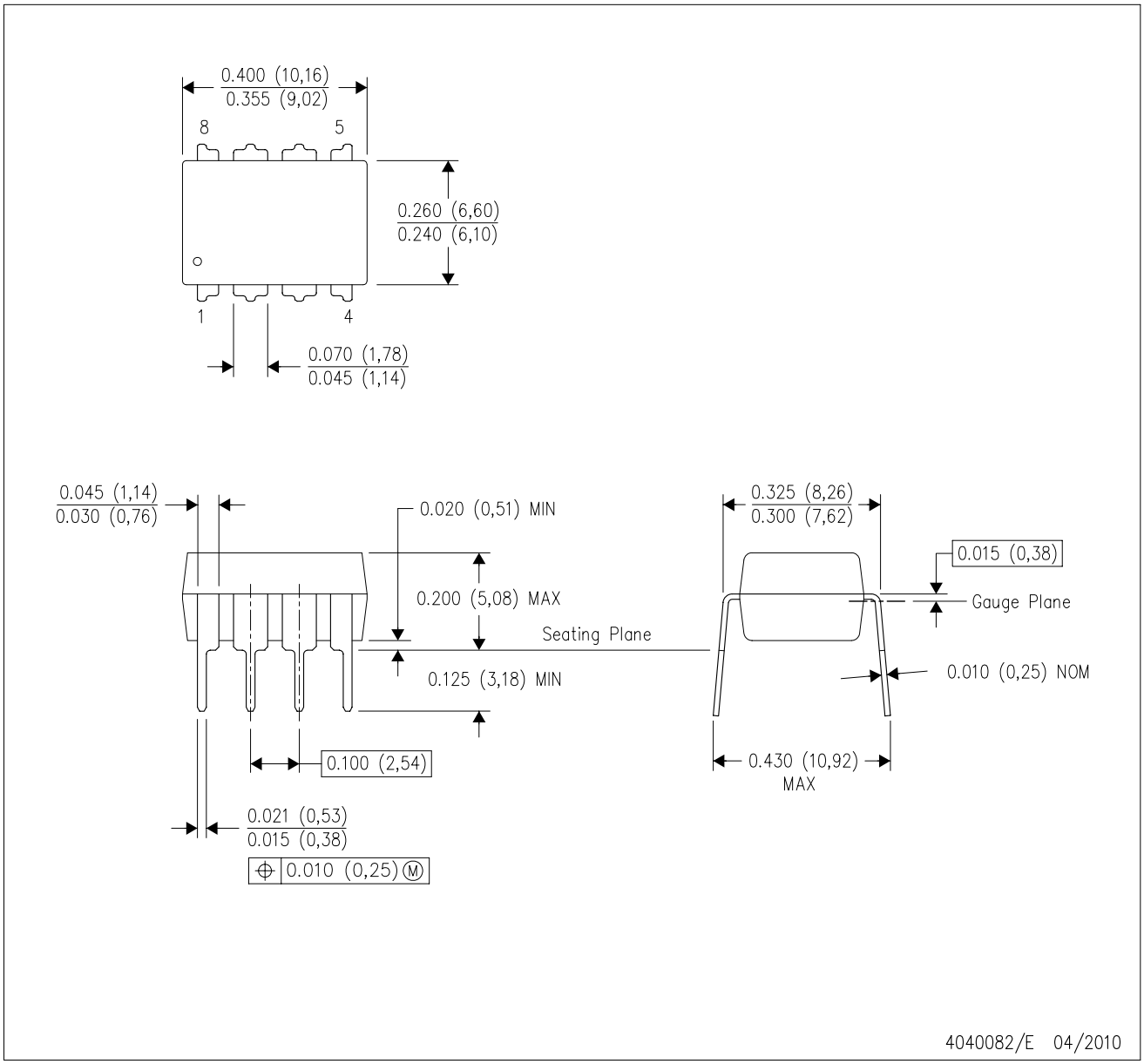

NOTES:
A. All linear dimensions are in inches (millimeters).
B. This drawing is subject to change without notice.
C. Falls within JEDEC MS–001 variation BA.

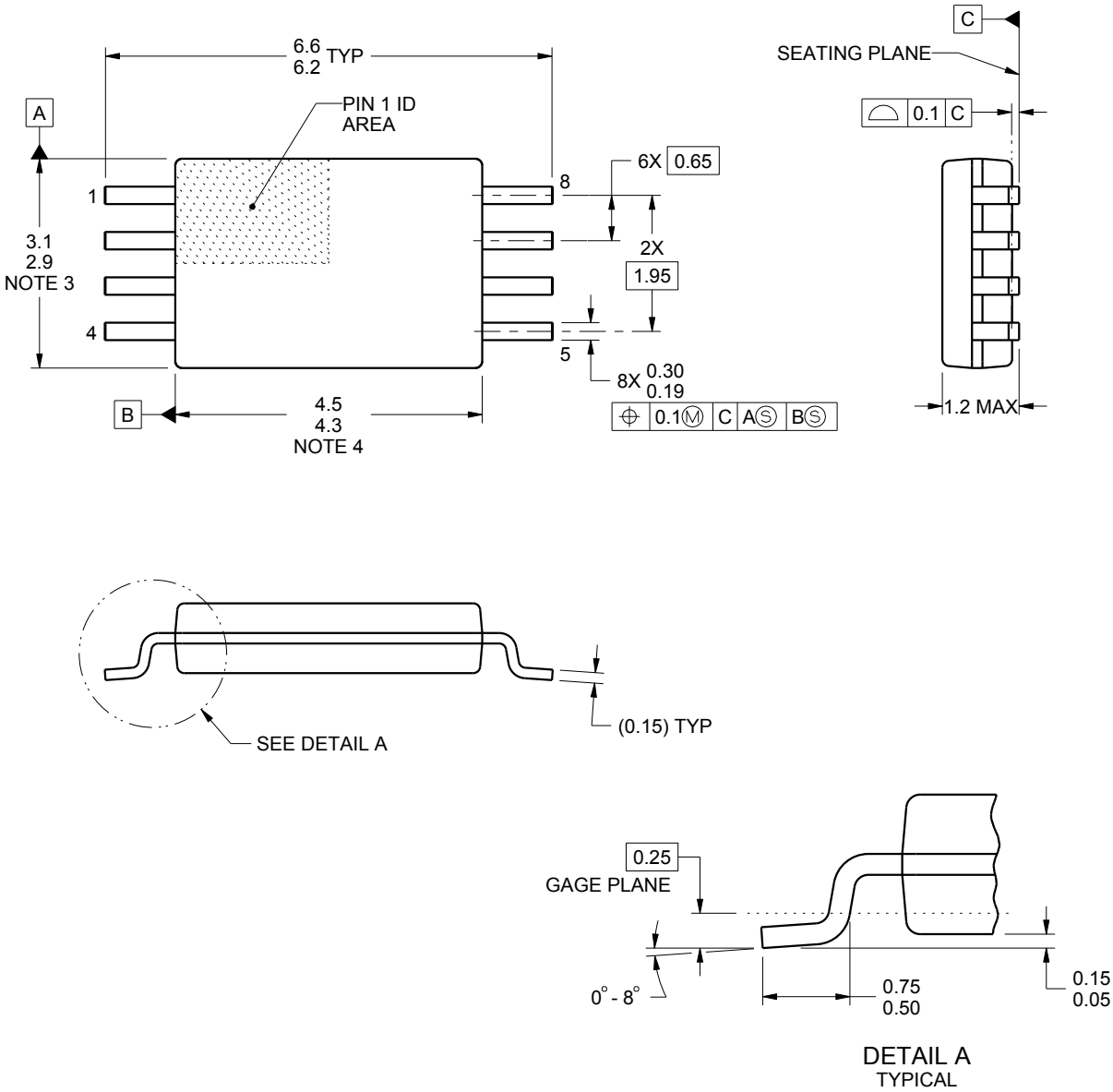

NOTES:

1. All linear dimensions are in millimeters. Any dimensions in parenthesis are for reference only. Dimensioning and tolerancing per ASME Y14.5M.
2. This drawing is subject to change without notice.
3. This dimension does not include mold flash, protrusions, or gate burrs. Mold flash, protrusions, or gate burrs shall not exceed 0.15 mm per side.
4. This dimension does not include interlead flash. Interlead flash shall not exceed 0.25 mm per side.
5. Reference JEDEC registration MO-153, variation AA.

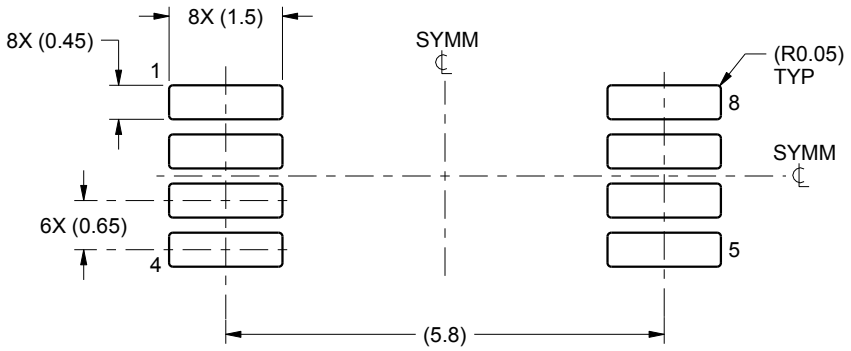

LAND PATTERN EXAMPLE
SCALE:10X

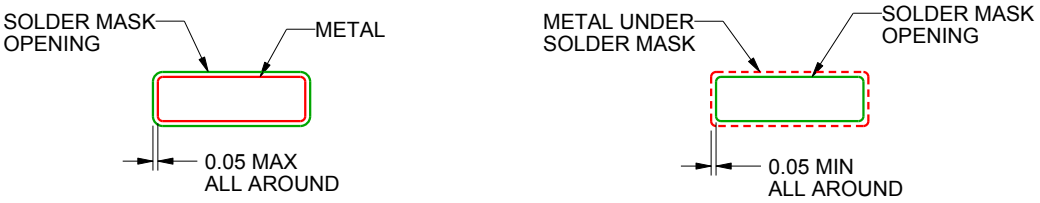

NON SOLDER MASK
DEFINED

SOLDER MASK
DEFINED

SOLDER MASK DETAILS
NOT TO SCALE

4221848/A 02/2015

NOTES: (continued)

6. Publication IPC-7351 may have alternate designs.
7. Solder mask tolerances between and around signal pads can vary based on board fabrication site.

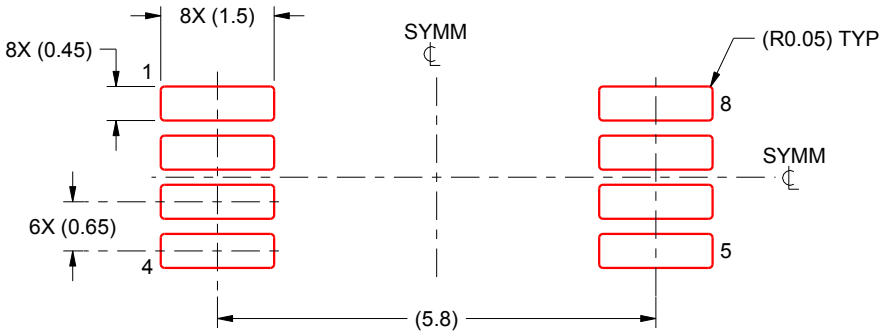

SOLDER PASTE EXAMPLE
BASED ON 0.125 mm THICK STENCIL
SCALE:10X

4221848/A 02/2015

NOTES: (continued)

8. Laser cutting apertures with trapezoidal walls and rounded corners may offer better paste release. IPC-7525 may have alternate design recommendations.
9. Board assembly site may have different recommendations for stencil design.

IMPORTANT NOTICE AND DISCLAIMER

TI PROVIDES TECHNICAL AND RELIABILITY DATA (INCLUDING DATA SHEETS), DESIGN RESOURCES (INCLUDING REFERENCE DESIGNS), APPLICATION OR OTHER DESIGN ADVICE, WEB TOOLS, SAFETY INFORMATION, AND OTHER RESOURCES “AS IS” AND WITH ALL FAULTS, AND DISCLAIMS ALL WARRANTIES, EXPRESS AND IMPLIED, INCLUDING WITHOUT LIMITATION ANY IMPLIED WARRANTIES OF MERCHANTABILITY, FITNESS FOR A PARTICULAR PURPOSE OR NON-INFRINGEMENT OF THIRD PARTY INTELLECTUAL PROPERTY RIGHTS.

These resources are intended for skilled developers designing with TI products. You are solely responsible for (1) selecting the appropriate TI products for your application, (2) designing, validating and testing your application, and (3) ensuring your application meets applicable standards, and any other safety, security, regulatory or other requirements.

These resources are subject to change without notice. TI grants you permission to use these resources only for development of an application that uses the TI products described in the resource. Other reproduction and display of these resources is prohibited. No license is granted to any other TI intellectual property right or to any third party intellectual property right. TI disclaims responsibility for, and you will fully indemnify TI and its representatives against, any claims, damages, costs, losses, and liabilities arising out of your use of these resources.

TI’s products are provided subject to TI’s Terms of Sale or other applicable terms available either on ti.com or provided in conjunction with such TI products. TI’s provision of these resources does not expand or otherwise alter TI’s applicable warranties or warranty disclaimers for TI products.

TI objects to and rejects any additional or different terms you may have proposed.

Mailing Address: Texas Instruments, Post Office Box 655303, Dallas, Texas 75265
Copyright © 2022, Texas Instruments Incorporated