DRV5055 比例式线性霍尔效应传感器

1 特性

- 比例式线性霍尔效应磁传感器
- 由 3.3V 和 5V 电源供电
- 模拟输出，提供 $V_{CC}/2$ 静态失调电压
- 磁性灵敏度选项（V_{CC} = 5V 时）：
  - A1/Z1：100mV/mT，±21mT 范围
  - A2/Z2：50mV/mT，±42mT 范围
  - A3/Z3：25mV/mT，±85mT 范围
  - A4/Z4：12.5mV/mT，±169mT 范围
- 高速 20kHz 检测带宽
- 低噪声输出，具有 ±1mA 驱动器
- 磁体温度漂移补偿（针对 A1/A2/A3/A4 版本提供，针对 Z1/Z2/Z3/Z4 版本不提供）
- 标准行业封装：
  - 表面贴装 SOT-23
  - 穿孔 TO-92

2 应用

- 精确位置检测
- 工业自动化和机器人
- 家用电器
- 游戏手柄、踏板、键盘、触发器
- 高度找平、倾斜和重量测量
- 流体流速测量
- 医疗设备
- 绝对值角度编码
- 电流检测

3 说明

DRV5055 是一款线性霍尔效应传感器，可按比例响应磁通量密度。该器件可用于在各种应用中进行精确的位置检测。

该器件由 3.3V 或 5V 电源供电。当不存在磁场时，模拟输出可驱动 1/2 V_{CC}。输出会随施加的磁通量密度呈线性变化，四个灵敏度选项可根据所需的检测范围提供最大的输出电压摆幅。南北磁极产生唯一的电压。

该器件可检测垂直于封装顶部的磁通量，两个封装选项可提供不同的检测方向。

该器件使用比例式架构，当外部模数转换器 (ADC) 使用相同的 V_{CC} 作为其基准电压时，可消除 V_{CC} 容差产生的误差。此外，该器件具有磁体温度补偿功能，可抵消磁体漂移，在 –40°C 至 125°C 的宽温度范围内实现线性性能。还提供了无磁体漂移温度补偿的器件选项。

器件信息(1)

器件型号	封装	封装尺寸（标称值）
DRV5055	SOT-23 (3)	2.92mm × 1.30mm
	TO-92 (3)	4.00mm × 3.15mm

(1) 如需了解所有可用封装，请参阅数据表末尾的可订购产品附录。

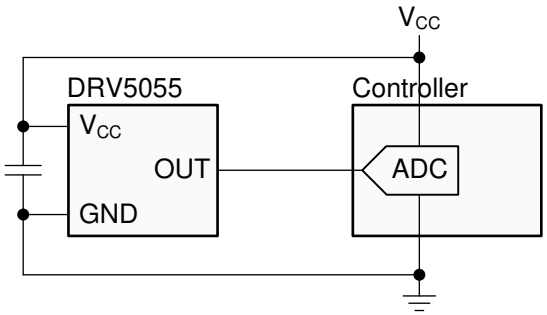

典型原理图

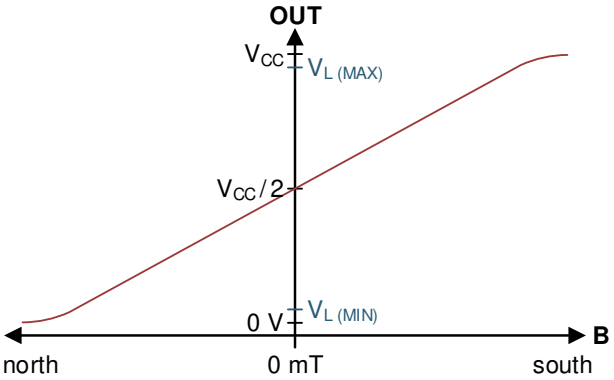

磁响应

本文档旨在为方便起见，提供有关 TI 产品中文版本的信息，以确认产品的概要。有关适用的官方英文版本的最新信息，请访问 www.ti.com，其内容始终优先。TI 不保证翻译的准确性和有效性。在实际设计之前，请务必参考最新版本的英文版本。

Table of Contents

1 特性 1
2 应用 1
3 说明 1
4 Revision History 2
5 Pin Configuration and Functions 3
6 Specifications 4
6.1 Absolute Maximum Ratings 4
6.2 ESD Ratings 4
6.3 Recommended Operating Conditions 4
6.4 Thermal Information 4
6.5 Electrical Characteristics 4
6.6 Magnetic Characteristics 5
6.7 Typical Characteristics 6
7 Detailed Description 9
7.1 Overview 9
7.2 Functional Block Diagram 9
7.3 Feature Description 9
7.4 Device Functional Modes 13
8 Application and Implementation 14
8.1 Application Information 14
8.2 Typical Application 15
8.3 Do's and Don'ts 17
9 Power Supply Recommendations 18
10 Layout 18
10.1 Layout Guidelines 18
10.2 Layout Examples 18
11 Device and Documentation Support 19
11.1 Documentation Support 19
11.2 接收文档更新通知 19
11.3 支持资源 19
11.4 Trademarks 19
11.5 静电放电警告 19
11.6 术语表 19
12 Mechanical, Packaging, and Orderable Information 19

4 Revision History

注：以前版本的页码可能与当前版本的页码不同

Changes from Revision A (June 2020) to Revision B (April 2021)	Page
• 更新了整个文档中的表格、图和交叉参考的编号格式	1
• Changed the absolute maximum operating junction temperature from: 150°C to: 170°C	4
• Removed the Product Preview tablenote from the *Magnetic Characteristics* table	5

Changes from Revision * (January 2018) to Revision A (June 2020)	Page
• 在数据表中添加了零 TC 灵敏度选项	1
• Added Zero TC information to the *Electrical Characteristics*	4
• Added Zero TC information to the *Magnetic Characteristics* table	5
• Added graphs for DV5055Z1/Z2/Z3/Z4 options in the *Typical Characteristics* section	6
• Updated S_{TC} definition in 方程式 1	10
• Updated the *Sensitivity Temperature Compensation for Magnets* section for Zero TC options	12

Copyright © 2021 Texas Instruments Incorporated

5 Pin Configuration and Functions

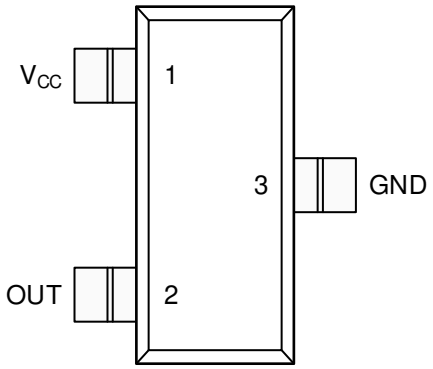

图 5-1. DBZ Package 3-Pin SOT-23 Top View

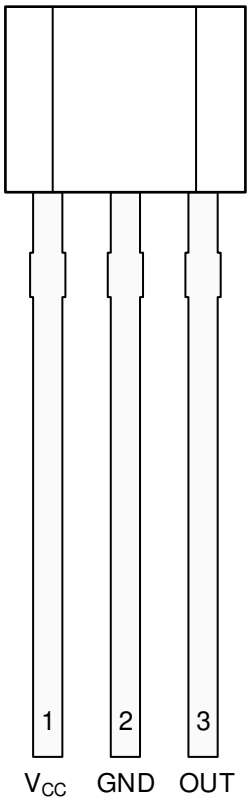

图 5-2. LPG Package 3-Pin TO-92 Top View

表 5-1. Pin Functions

PIN			I/O	DESCRIPTION
NAME	SOT-23	TO-92		
V_{CC}	1	1	—	Power supply. TI recommends connecting this pin to a ceramic capacitor to ground with a value of at least 0.01 µF.
OUT	2	3	O	Analog output
GND	3	2	—	Ground reference

6 Specifications

6.1 Absolute Maximum Ratings

over operating free-air temperature range (unless otherwise noted)[1]

		MIN	MAX	UNIT
Power supply voltage	V_{CC}	– 0.3	7	V
Output voltage	OUT	– 0.3	V_{CC} + 0.3	V
Magnetic flux density, B_{MAX}		Unlimited		T
Operating junction temperature, T_J		– 40	170	°C
Storage temperature, T_{stg}		– 65	150	°C

(1) Stresses beyond those listed under *Absolute Maximum Ratings* may cause permanent damage to the device. These are stress ratings only, which do not imply functional operation of the device at these or any other conditions beyond those indicated under *Recommended Operating Conditions*. Exposure to absolute-maximum-rated conditions for extended periods may affect device reliability.

6.2 ESD Ratings

			VALUE	UNIT
$V_{(ESD)}$	Electrostatic discharge	Human-body model (HBM), per ANSI/ESDA/JEDEC JS-001[1]	±2500	V
		Charged-device model (CDM), per JEDEC specification JESD22-C101[2]	±750	

(1) JEDEC document JEP155 states that 500-V HBM allows safe manufacturing with a standard ESD control process.
(2) JEDEC document JEP157 states that 250-V CDM allows safe manufacturing with a standard ESD control process.

6.3 Recommended Operating Conditions

over operating free-air temperature range (unless otherwise noted)

		MIN	MAX	UNIT
V_{CC}	Power-supply voltage[1]	3	3.63	V
		4.5	5.5	
I_O	Output continuous current	– 1	1	mA
T_A	Operating ambient temperature[2]	– 40	125	°C

(1) There are two isolated operating V_{CC} ranges. For more information see the *Operating V_{CC} Ranges* section.
(2) Power dissipation and thermal limits must be observed.

6.4 Thermal Information

THERMAL METRIC[1]		DRV5055		UNIT
		SOT-23 (DBZ)	TO-92 (LPG)	
		3 PINS	3 PINS	
$R_{\theta JA}$	Junction-to-ambient thermal resistance	170	121	°C/W
$R_{\theta JC(top)}$	Junction-to-case (top) thermal resistance	66	67	°C/W
$R_{\theta JB}$	Junction-to-board thermal resistance	49	97	°C/W
Y_{JT}	Junction-to-top characterization parameter	1.7	7.6	°C/W
Y_{JB}	Junction-to-board characterization parameter	48	97	°C/W

(1) For more information about traditional and new thermal metrics, see the *Semiconductor and IC Package Thermal Metrics* application report.

6.5 Electrical Characteristics

for V_{CC} = 3 V to 3.63 V and 4.5 V to 5.5 V, over operating free-air temperature range (unless otherwise noted)

PARAMETER		TEST CONDITIONS[1]	MIN	TYP	MAX	UNIT
I_{CC}	Operating supply current			6	10	mA

Copyright © 2021 Texas Instruments Incorporated

for V_{CC} = 3 V to 3.63 V and 4.5 V to 5.5 V, over operating free-air temperature range (unless otherwise noted)

PARAMETER		TEST CONDITIONS[1]		MIN	TYP	MAX	UNIT
t_{ON}	Power-on time (see 图 7-4)	B = 0 mT, no load on OUT			175	330	µs
f_{BW}	Sensing bandwidth				20		kHz
t_d	Propagation delay time	From change in B to change in OUT			10		µs
B_{ND}	Input-referred RMS noise density	V_{CC} = 5 V			130		nT/√Hz
		V_{CC} = 3.3 V			215		
B_N	Input-referred noise	$B_{ND} \times 6.6 \times \sqrt{20}$ kHz	V_{CC} = 5 V		0.12		mT_{PP}
			V_{CC} = 3.3 V		0.2		
V_N	Output-referred noise[2]	$B_N \times S$	DRV5055A1/Z1		12		mV_{PP}
			DRV5055A2/Z2		6		
			DRV5055A3/Z3		3		
			DRV5055A4/Z4		1.5		

(1) B is the applied magnetic flux density.
(2) V_N describes voltage noise on the device output. If the full device bandwidth is not needed, noise can be reduced with an RC filter.

6.6 Magnetic Characteristics

for V_{CC} = 3 V to 3.63 V and 4.5 V to 5.5 V, over operating free-air temperature range (unless otherwise noted)

PARAMETER		TEST CONDITIONS[1]		MIN	TYP	MAX	UNIT
V_Q	Quiescent voltage	B = 0 mT, T_A = 25°C	V_{CC} = 5 V	2.43	2.5	2.57	V
			V_{CC} = 3.3 V	1.59	1.65	1.71	
$V_{Q\Delta T}$	Quiescent voltage temperature drift	B = 0 mT, T_A = –40°C to 125°C versus 25°C			±1% × V_{CC}		V
V_{QRE}	Quiescent voltage ratiometry error[2]				±0.2%		
$V_{Q\Delta L}$	Quiescent voltage lifetime drift	High-temperature operating stress for 1000 hours			< 0.5%		
S	Sensitivity	V_{CC} = 5 V, T_A = 25°C	DRV5055A1/Z1	95	100	105	mV/mT
			DRV5055A2/Z2	47.5	50	52.5	
			DRV5055A3/Z3	23.8	25	26.2	
			DRV5055A4/Z4	11.9	12.5	13.2	
		V_{CC} = 3.3 V, T_A = 25°C	DRV5055A1/Z1	57	60	63	
			DRV5055A2/Z2	28.5	30	31.5	
			DRV5055A3/Z3	14.3	15	15.8	
			DRV5055A4/Z4	7.1	7.5	7.9	
B_L	Linear magnetic sensing range[3] [4]	V_{CC} = 5 V, T_A = 25°C	DRV5055A1/Z1	±21			mT
			DRV5055A2/Z2	±42			
			DRV5055A3/Z3	±85			
			DRV5055A4/Z4	±169			
		V_{CC} = 3.3 V, T_A = 25°C	DRV5055A1/Z1	±22			
			DRV5055A2/Z2	±44			
			DRV5055A3/Z3	±88			
			DRV5055A4/Z4	±176			
V_L	Linear range of output voltage[4]			0.2		V_{CC} – 0.2	V
S_{TC}	Sensitivity temperature compensation for magnets[5]	DRV5055A1, DRV5055A2, DRV5055A3, DRV5055A4			0.12		%/°C
S_{TCz}	Sensitivity temperature compensation for magnets[5]	DRV5055Z1, DRV5055Z2, DRV5055Z3, DRV5055Z4			0		%/°C
S_{LE}	Sensitivity linearity error[4]	V_{OUT} is within V_L			±1%		
S_{SE}	Sensitivity symmetry error[4]	V_{OUT} is within V_L			±1%		

for V_{CC} = 3 V to 3.63 V and 4.5 V to 5.5 V, over operating free-air temperature range (unless otherwise noted)

PARAMETER		TEST CONDITIONS(1)	MIN	TYP	MAX	UNIT
S_{RE}	Sensitivity ratiometry error(2)	T_A = 25°C, with respect to V_{CC} = 3.3 V or 5 V	– 2.5%		2.5%	
$S_{\Delta L}$	Sensitivity lifetime drift	High-temperature operating stress for 1000 hours		<0.5%		

(1) B is the applied magnetic flux density.
(2) See the *Ratiometric Architecture* section.
(3) B_L describes the minimum linear sensing range at 25°C taking into account the maximum V_Q and Sensitivity tolerances.
(4) See the *Sensitivity Linearity* section.
(5) S_{TC} describes the rate the device increases Sensitivity with temperature. For more information, see the *Sensitivity Temperature Compensation for Magnets* section.

6.7 Typical Characteristics

for T_A = 25°C (unless otherwise noted)

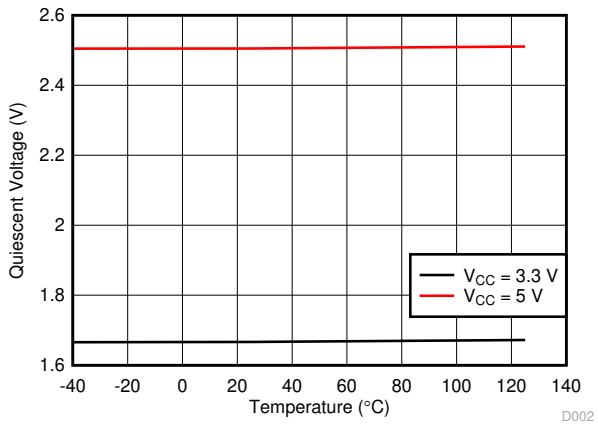

DRV5055A1/A2/A3/A4

图 6-1. Quiescent Voltage vs. Temperature

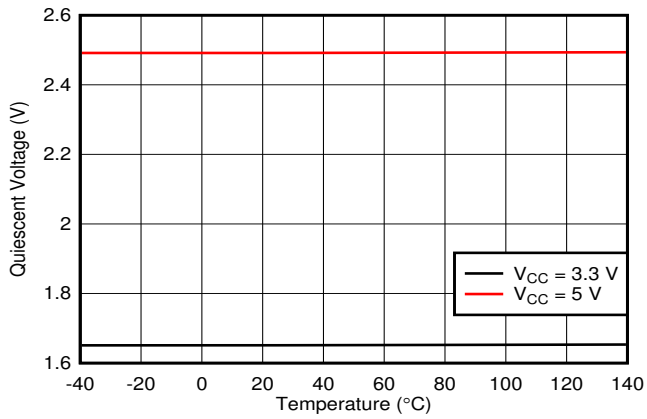

DRV5055Z1/Z2/Z3/Z4

图 6-2. Quiescent Voltage vs. Temperature

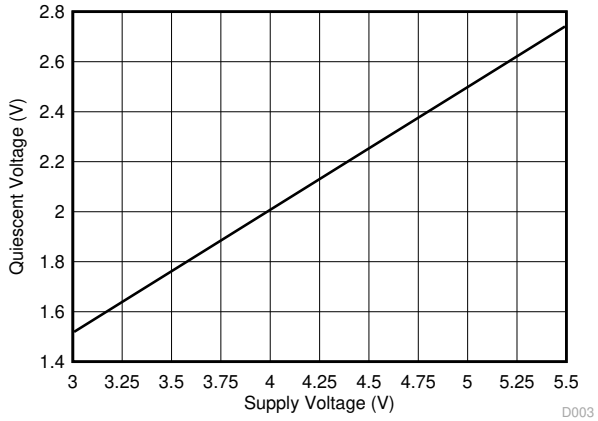

DRV5055A1/A2/A3/A4

图 6-3. Quiescent Voltage vs. Supply Voltage

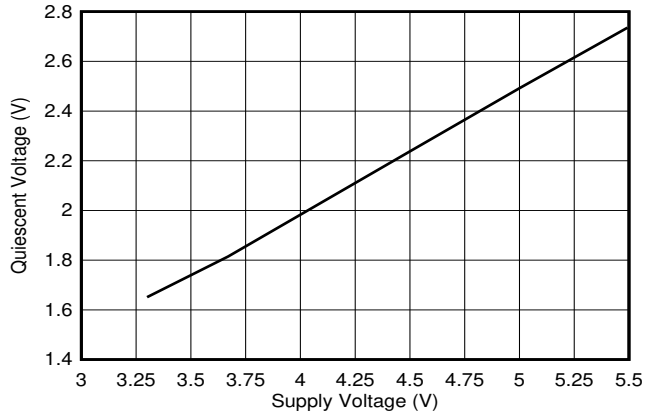

DRV5055Z1/Z2/Z3/AZ

图 6-4. Quiescent Voltage vs. Supply Voltage

Copyright © 2021 Texas Instruments Incorporated

6.7 Typical Characteristics (continued)

for T_A = 25°C (unless otherwise noted)

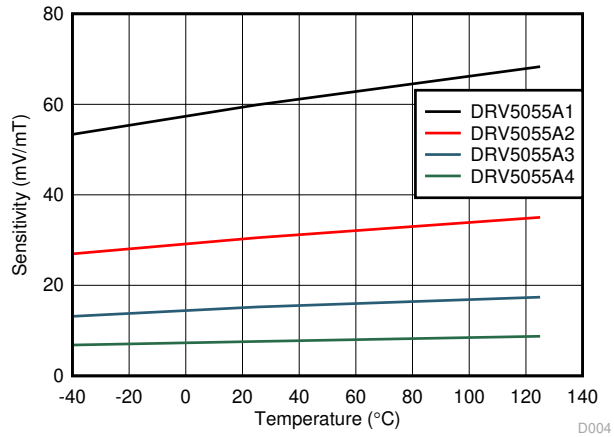

V_{CC} = 3.3 V

图 6-5. Sensitivity vs. Temperature

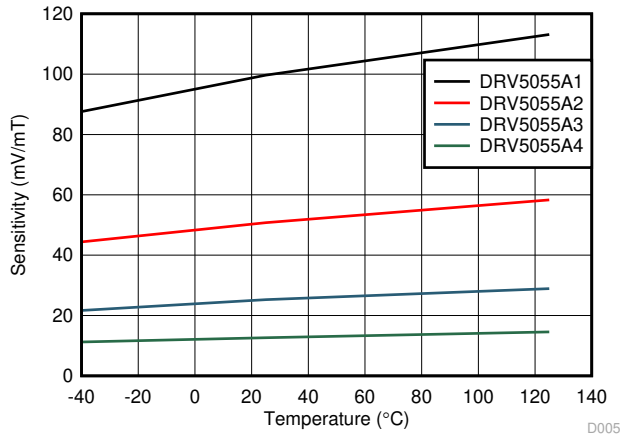

V_{CC} = 5 V

图 6-6. Sensitivity vs. Temperature

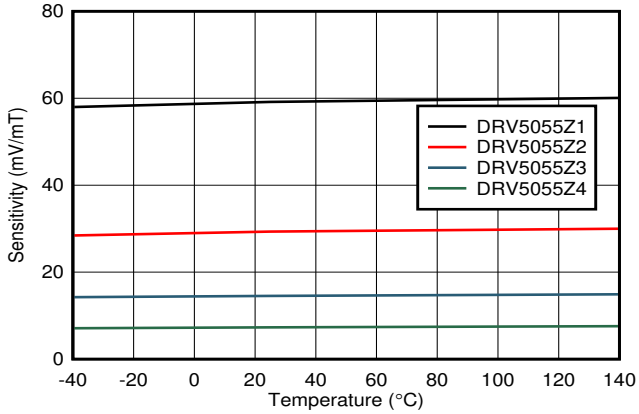

V_{CC} = 3.3 V

图 6-7. Sensitivity vs. Temperature

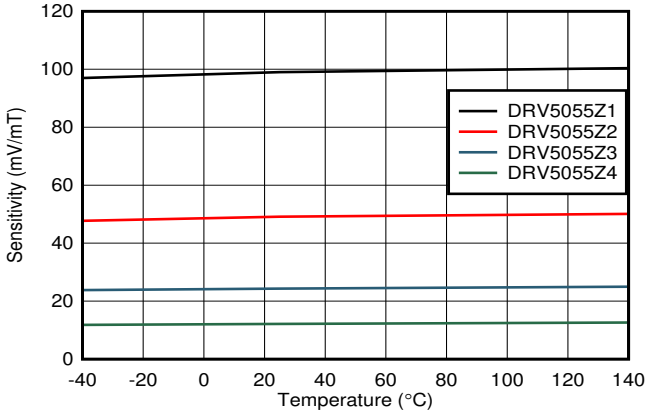

V_{CC} = 5 V

图 6-8. Sensitivity vs. Temperature

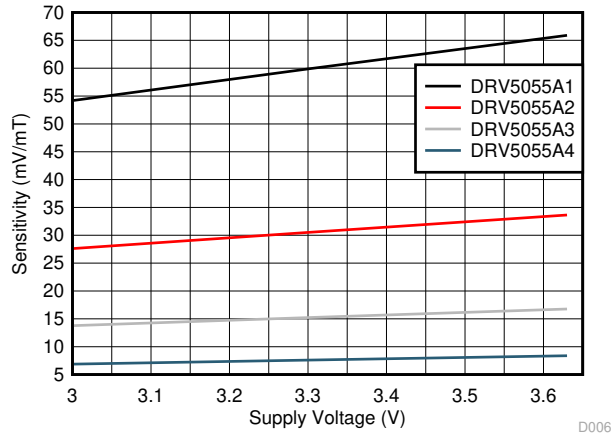

V_{CC} = 3.3 V ±10%

图 6-9. Sensitivity vs. Supply Voltage

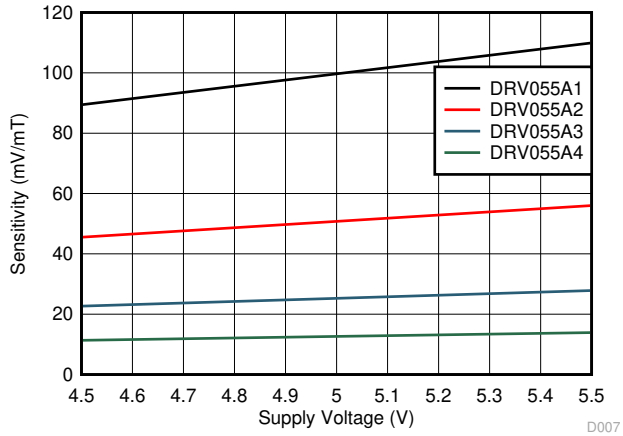

V_{CC} = 5 V ±10%

图 6-10. Sensitivity vs. Supply Voltage

6.7 Typical Characteristics (continued)

for T_A = 25°C (unless otherwise noted)

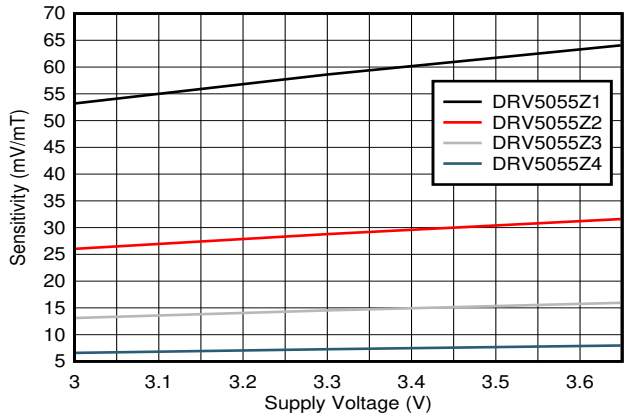

V_{CC} = 3.3 V ±10%

图 6-11. Sensitivity vs. Supply Voltage

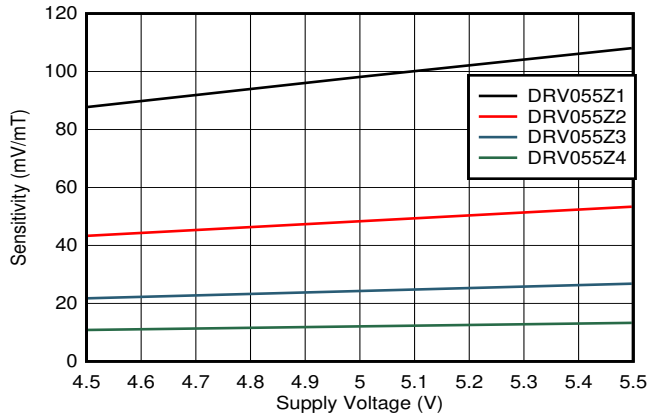

V_{CC} = 5 V ±10%

图 6-12. Sensitivity vs. Supply Voltage

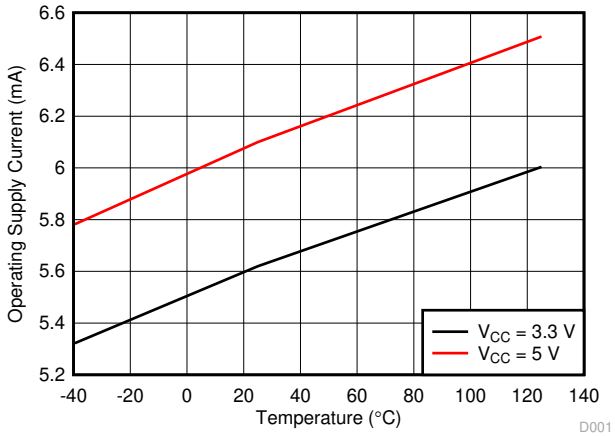

图 6-13. Operating Supply Current vs. Temperature

Copyright © 2021 Texas Instruments Incorporated

7 Detailed Description

7.1 Overview

The DRV5055 is a 3-pin linear Hall effect sensor with fully integrated signal conditioning, temperature compensation circuits, mechanical stress cancellation, and amplifiers. The device operates from 3.3-V and 5-V (±10%) power supplies, measures magnetic flux density, and outputs a proportional analog voltage that is referenced to V_{CC}.

7.2 Functional Block Diagram

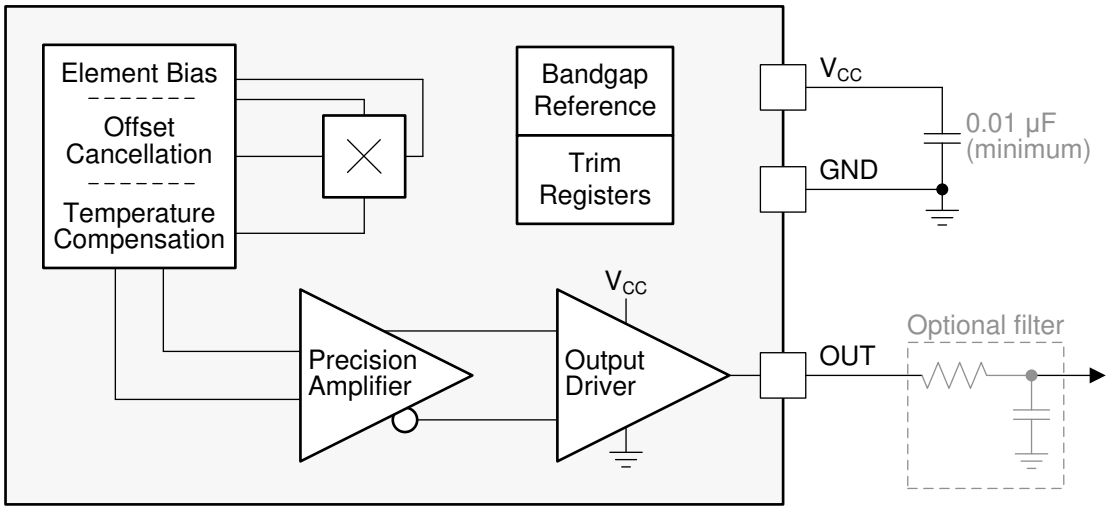

7.3 Feature Description

7.3.1 Magnetic Flux Direction

As shown in 图 7-1, the DRV5055 is sensitive to the magnetic field component that is perpendicular to the top of the package.

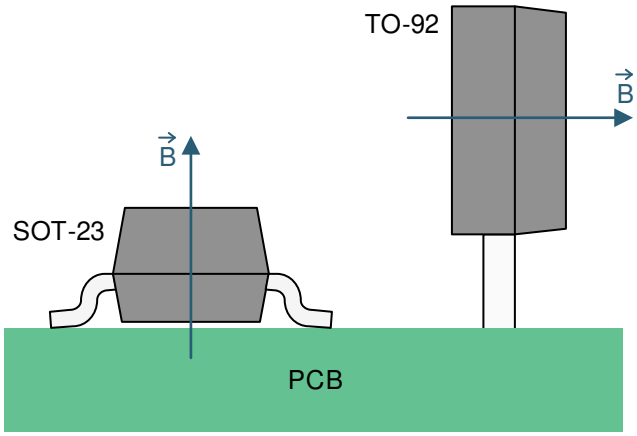

图 7-1. Direction of Sensitivity

Magnetic flux that travels from the bottom to the top of the package is considered positive in this document. This condition exists when a south magnetic pole is near the top (marked-side) of the package. Magnetic flux that travels from the top to the bottom of the package results in negative millitesla values.

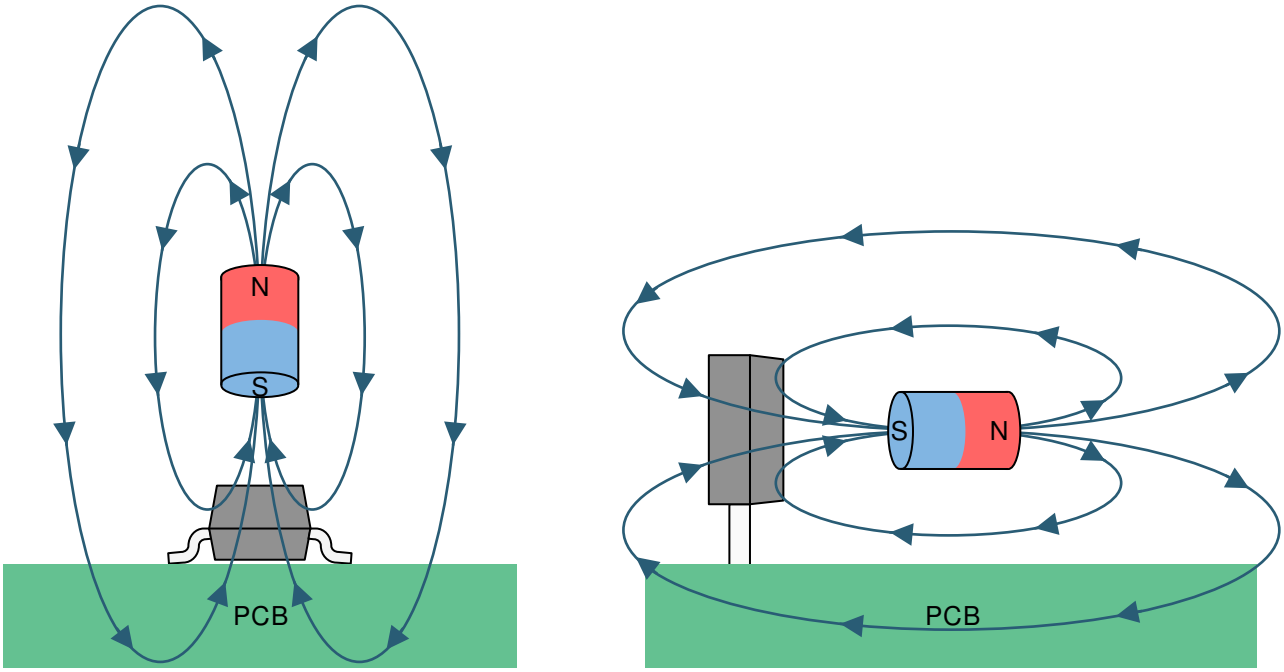

图 7-2. The Flux Direction for Positive B

7.3.2 Magnetic Response

When the DRV5055 is powered, the DRV5055 outputs an analog voltage according to 方程式 1:

$$V_{OUT} = V_Q + B \times \left(\text{Sensitivity}_{(25°C)} \times (1 + S_{TC} \times (T_A - 25°C))\right) \quad (1)$$

where

- V_Q is typically half of V_{CC}
- B is the applied magnetic flux density
- $\text{Sensitivity}_{(25°C)}$ depends on the device option and V_{CC}
- S_{TC} is typically 0.12%/°C for device options DRV5055A1 - DRV5055A4 and is 0%/°C for DRV5055Z1 - DRV5055Z4 options
- T_A is the ambient temperature
- V_{OUT} is within the V_L range

As an example, consider the DRV5055A3 with V_{CC} = 3.3 V, a temperature of 50°C, and 67 mT applied. Excluding tolerances, V_{OUT} = 1650 mV + 67 mT × (15 mV/mT × (1 + 0.0012/°C × (50°C – 25°C))) = 2685 mV.

Copyright © 2021 Texas Instruments Incorporated

7.3.3 Sensitivity Linearity

The device produces a linear response when the output voltage is within the specified V_L range. Outside this range, sensitivity is reduced and nonlinear. 图 7-3 graphs the magnetic response.

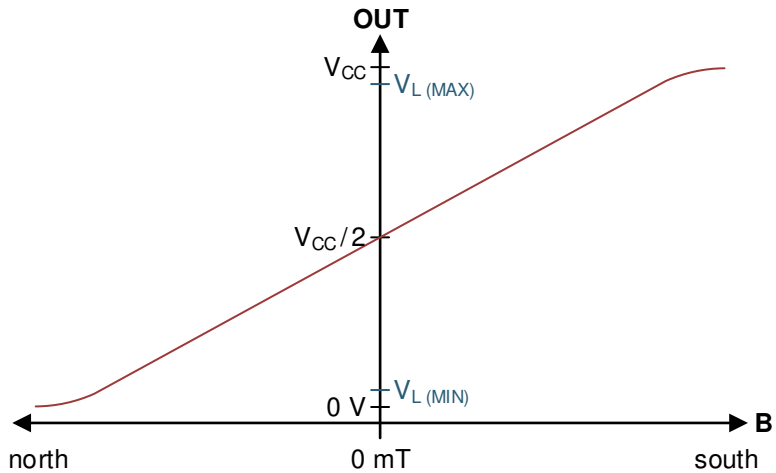

图 7-3. Magnetic Response

方程式 2 calculates parameter B_L, the minimum linear sensing range at 25°C taking into account the maximum quiescent voltage and sensitivity tolerances.

$$B_{L(MIN)} = \frac{V_{L(MAX)} - V_{Q(MAX)}}{S_{(MAX)}} \tag{2}$$

The parameter S_{LE} defines linearity error as the difference in sensitivity between any two positive B values, and any two negative B values, while the output is within the V_L range.

The parameter S_{SE} defines symmetry error as the difference in sensitivity between any positive B value and the negative B value of the same magnitude, while the output voltage is within the V_L range.

7.3.4 Ratiometric Architecture

The DRV5055 has a ratiometric analog architecture that scales the quiescent voltage and sensitivity linearly with the power-supply voltage. For example, the quiescent voltage and sensitivity are 5% higher when V_{CC} = 5.25 V compared to V_{CC} = 5 V. This behavior enables external ADCs to digitize a consistent value regardless of the power-supply voltage tolerance, when the ADC uses V_{CC} as its reference.

方程式 3 calculates the sensitivity ratiometry error:

$$S_{RE} = 1 - \frac{S_{(VCC)} / S_{(5V)}}{V_{CC} / 5V} \text{ for } V_{CC} = 4.5 \text{ V to } 5.5 \text{ V}, \qquad S_{RE} = 1 - \frac{S_{(VCC)} / S_{(3.3V)}}{V_{CC} / 3.3V} \text{ for } V_{CC} = 3 \text{ V to } 3.63 \text{ V} \tag{3}$$

where

- $S_{(VCC)}$ is the sensitivity at the current V_{CC} voltage
- $S_{(5V)}$ or $S_{(3.3V)}$ is the sensitivity when V_{CC} = 5 V or 3.3 V
- V_{CC} is the current V_{CC} voltage

方程式 4 calculates quiescent voltage ratiometry error:

$$V_{QRE} = 1 - \frac{V_{Q(VCC)} / V_{Q(5V)}}{V_{CC} / 5V} \text{ for } V_{CC} = 4.5 \text{ V to } 5.5 \text{ V}, \qquad V_{QRE} = 1 - \frac{V_{Q(VCC)} / V_{Q(3.3V)}}{V_{CC} / 3.3V} \text{ for } V_{CC} = 3 \text{ V to } 3.63 \text{ V} \tag{4}$$

where

- $V_{Q(VCC)}$ is the quiescent voltage at the current V_{CC} voltage
- $V_{Q(5V)}$ or $V_{Q(3.3V)}$ is the quiescent voltage when V_{CC} = 5 V or 3.3 V
- V_{CC} is the current V_{CC} voltage

7.3.5 Operating V_{CC} Ranges

The DRV5055 has two recommended operating V_{CC} ranges: 3 V to 3.63 V and 4.5 V to 5.5 V. When V_{CC} is in the middle region between 3.63 V to 4.5 V, the device continues to function, but sensitivity is less known because there is a crossover threshold near 4 V that adjusts device characteristics.

7.3.6 Sensitivity Temperature Compensation for Magnets

Magnets generally produce weaker fields as temperature increases. The DRV5055 can either compensate by increasing sensitivity with temperature or by keeping the sensitivity constant, as defined by the parameters S_{TC} and S_{TCz}, respectively. For device options DRV5055A1 - DRV5055A4, the sensitivity at T_A = 125°C is typically 12% higher than at T_A = 25°C. For device options DRV5055Z1 - DRV5055Z4, the sensitivity at T_A = 125°C is typically same as the value at T_A = 25°C.

7.3.7 Power-On Time

After the V_{CC} voltage is applied, the DRV5055 requires a short initialization time before the output is set. The parameter t_{ON} describes the time from when V_{CC} crosses 3 V until OUT is within 5% of V_Q, with 0 mT applied and no load attached to OUT. 图 7-4 shows this timing diagram.

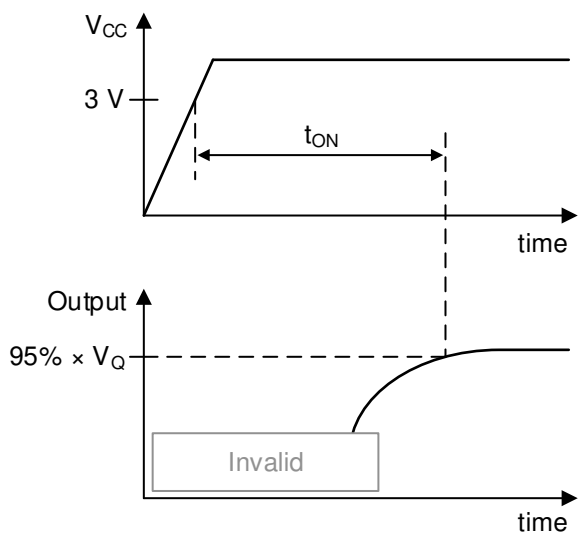

图 7-4. t_{ON} Definition

Copyright © 2021 Texas Instruments Incorporated

7.3.8 Hall Element Location

图 7-5 shows the location of the sensing element inside each package option.

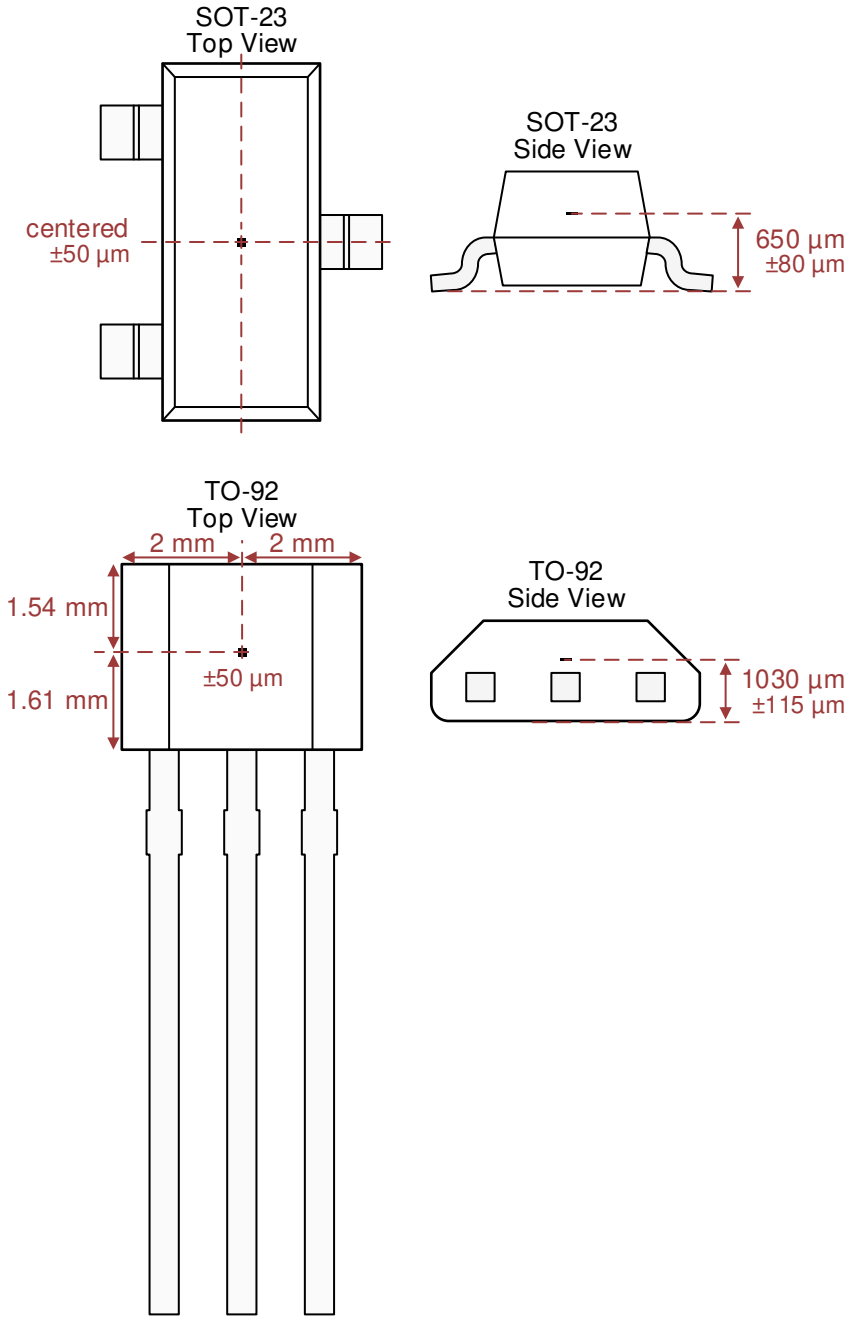

图 7-5. Hall Element Location

7.4 Device Functional Modes

The DRV5055 has one mode of operation that applies when the *Recommended Operating Conditions* are met.

8 Application and Implementation

Note

以下应用部分中的信息不属于 TI 器件规格的范围，TI 不担保其准确性和完整性。TI 的客 户应负责确定器件是否适用于其应用。客户应验证并测试其设计，以确保系统功能。

8.1 Application Information

8.1.1 Selecting the Sensitivity Option

Select the highest DRV5055 sensitivity option that can measure the required range of magnetic flux density, so that the output voltage swing is maximized.

Larger-sized magnets and farther sensing distances can generally enable better positional accuracy than very small magnets at close distances, because magnetic flux density increases exponentially with the proximity to a magnet. TI created an online tool to help with simple magnet calculations at https://www.ti.com/product/drv5013.

8.1.2 Temperature Compensation for Magnets

The DRV5055 temperature compensation is designed to directly compensate the average drift of neodymium (NdFeB) magnets and partially compensate ferrite magnets. The residual induction (B_r) of a magnet typically reduces by 0.12%/°C for NdFeB, and 0.20%/°C for ferrite. When the operating temperature of a system is reduced, temperature drift errors are also reduced.

8.1.3 Adding a Low-Pass Filter

As shown in *Functional Block Diagram*, an RC low-pass filter can be added to the device output for the purpose of minimizing voltage noise when the full 20-kHz bandwidth is not needed. This filter can improve the signal-to-noise ratio (SNR) and overall accuracy. Do not connect a capacitor directly to the device output without a resistor in between because doing so can make the output unstable.

8.1.4 Designing for Wire Break Detection

Some systems must detect if interconnect wires become open or shorted. The DRV5055 can support this function.

First, select a sensitivity option that causes the output voltage to stay within the V_L range during normal operation. Second, add a pullup resistor between OUT and V_{CC}. TI recommends a value between 20 kΩ to 100 kΩ, and the current through OUT must not exceed the I_O specification, including current going into an external ADC. Then, if the output voltage is ever measured to be within 150 mV of V_{CC} or GND, a fault condition exists. 图 8-1 shows the circuit, and 表 8-1 describes fault scenarios.

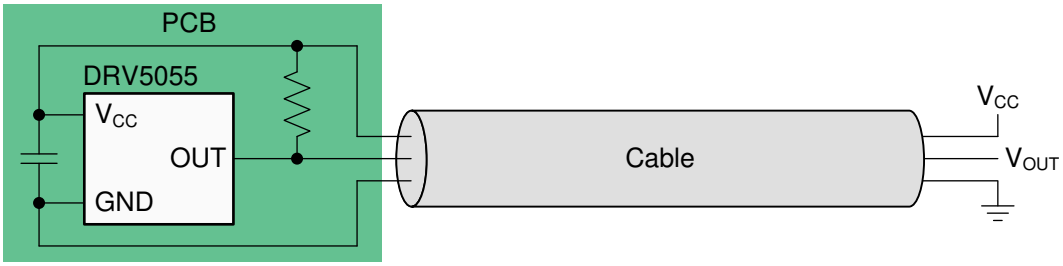

图 8-1. Wire Fault Detection Circuit

Copyright © 2021 Texas Instruments Incorporated

表 8-1. Fault Scenarios and the Resulting V_{OUT}

FAULT SCENARIO	V_{OUT}
V_{CC} disconnects	Close to GND
GND disconnects	Close to V_{CC}
V_{CC} shorts to OUT	Close to V_{CC}
GND shorts to OUT	Close to GND

8.2 Typical Application

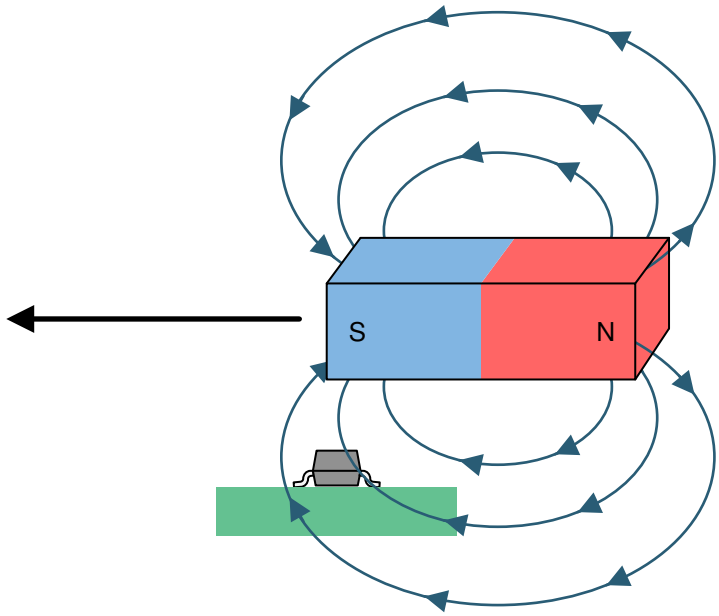

图 8-2. Common Magnet Orientation

8.2.1 Design Requirements

Use the parameters listed in 表 8-2 for this design example.

表 8-2. Design Parameters

DESIGN PARAMETER	EXAMPLE VALUE
V_{CC}	5 V
Magnet	15 × 5 × 5 mm NdFeB
Travel distance	12 mm
Maximum B at the sensor at 25°C	±75 mT
Device option	DRV5055A3

8.2.2 Detailed Design Procedure

Linear Hall effect sensors provide flexibility in mechanical design, because many possible magnet orientations and movements produce a usable response from the sensor. 图 8-2 shows one of the most common orientations, which uses the full north to south range of the sensor and causes a close-to-linear change in magnetic flux density as the magnet moves across.

When designing a linear magnetic sensing system, always consider these three variables: the magnet, sensing distance, and the range of the sensor. Select the DRV5055 with the highest sensitivity that has a B_L (linear magnetic sensing range) that is larger than the maximum magnetic flux density in the application. To determine the magnetic flux density the sensor receives, TI recommends using magnetic field simulation software, referring to magnet specifications, and testing.

8.2.3 Application Curve

图 8-3 shows the simulated magnetic flux from a NdFeB magnet.

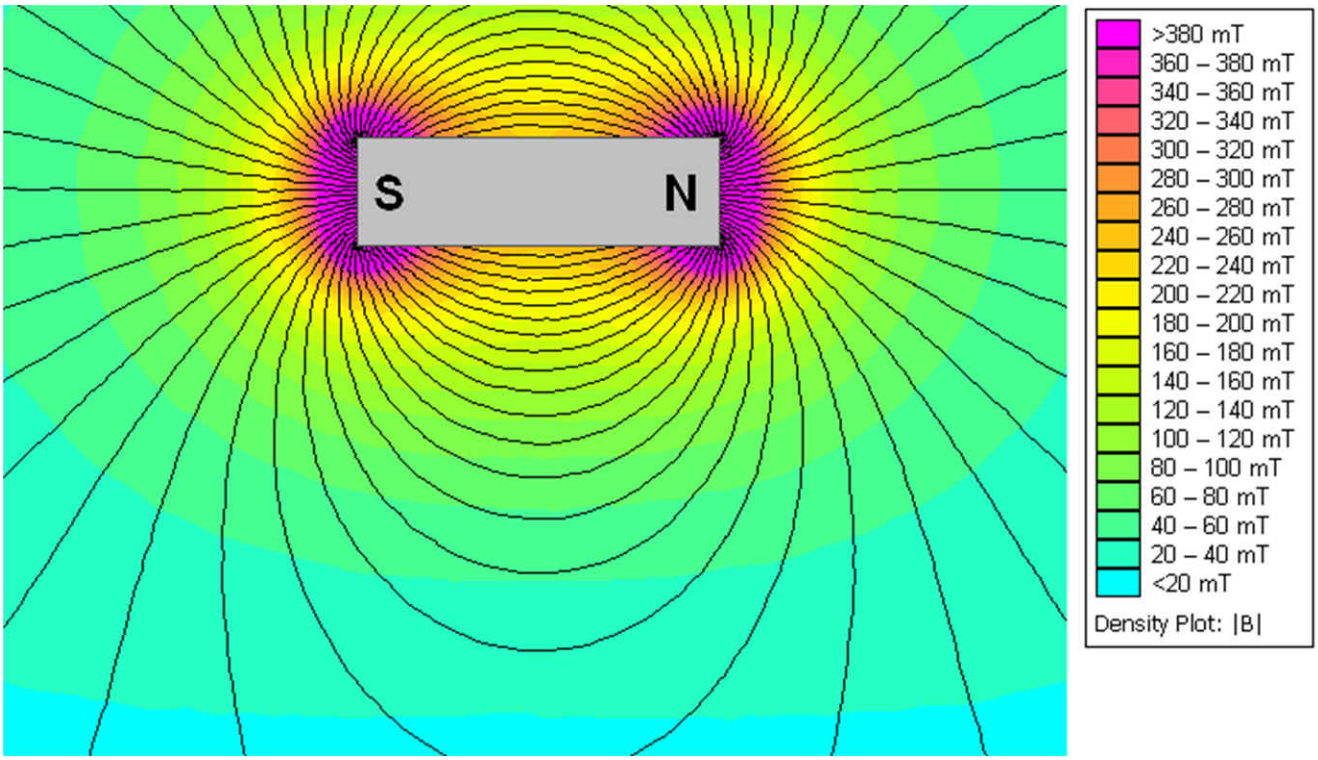

图 8-3. Simulated Magnetic Flux

Copyright © 2021 Texas Instruments Incorporated

8.3 Do's and Don'ts

Because the Hall element is sensitive to magnetic fields that are perpendicular to the top of the package, a correct magnet approach must be used for the sensor to detect the field. 图 8-4 shows correct and incorrect approaches.

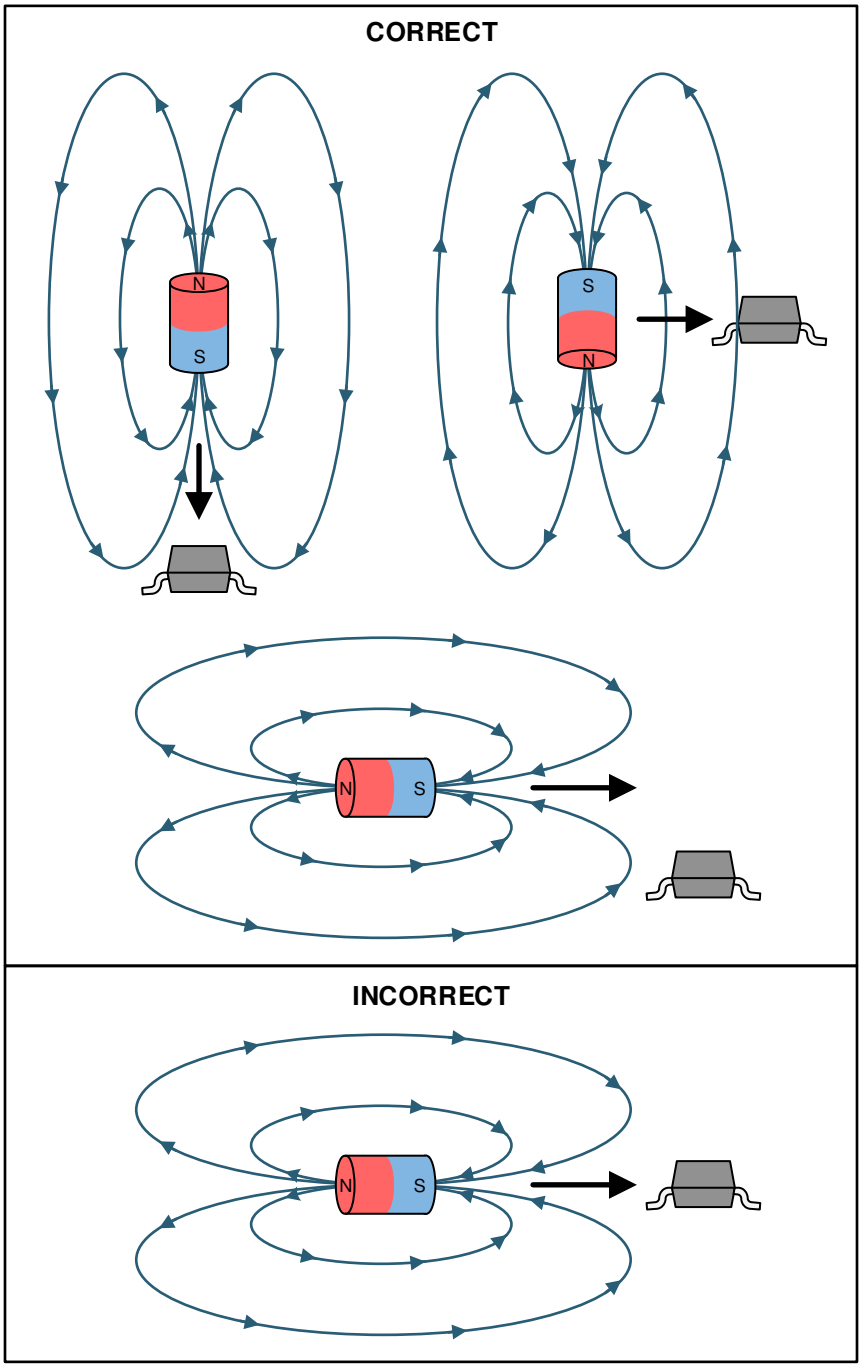

图 8-4. Correct and Incorrect Magnet Approaches

9 Power Supply Recommendations

A decoupling capacitor close to the device must be used to provide local energy with minimal inductance. TI recommends using a ceramic capacitor with a value of at least 0.01 µF.

10 Layout

10.1 Layout Guidelines

Magnetic fields pass through most nonferromagnetic materials with no significant disturbance. Embedding Hall effect sensors within plastic or aluminum enclosures and sensing magnets on the outside is common practice. Magnetic fields also easily pass through most printed-circuit boards, which makes placing the magnet on the opposite side possible.

10.2 Layout Examples

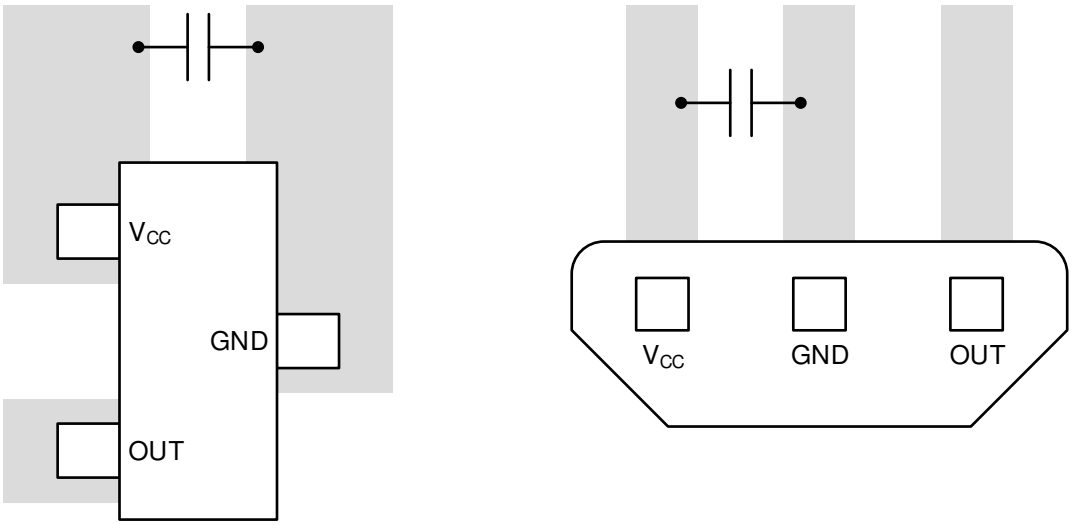

图 10-1. Layout Examples

Copyright © 2021 Texas Instruments Incorporated

11 Device and Documentation Support

11.1 Documentation Support

11.1.1 Related Documentation

For related documentation see the following:

- Texas Instruments, *Overview Using Linear Hall Effect Sensors to Measure Angle* application brief
- Texas Instruments, *Incremental Rotary Encoder Design Considerations* application brief

11.2 接收文档更新通知

要接收文档更新通知，请导航至 ti.com 上的器件产品文件夹。点击*订阅更新* 进行注册，即可每周接收产品信息更改摘要。有关更改的详细信息，请查看任何已修订文档中包含的修订历史记录。

11.3 支持资源

TI E2E™ 支持论坛是工程师的重要参考资料，可直接从专家获得快速、经过验证的解答和设计帮助。搜索现有解答或提出自己的问题可获得所需的快速设计帮助。

链接的内容由各个贡献者“按原样”提供。这些内容并不构成 TI 技术规范，并且不一定反映 TI 的观点；请参阅 TI 的《使用条款》。

11.4 Trademarks

TI E2E™ is a trademark of Texas Instruments.
所有商标均为其各自所有者的财产。

11.5 静电放电警告

静电放电 (ESD) 会损坏这个集成电路。德州仪器 (TI) 建议通过适当的预防措施处理所有集成电路。如果不遵守正确的处理和安装程序，可能会损坏集成电路。

ESD 的损坏小至导致微小的性能降级，大至整个器件故障。精密的集成电路可能更容易受到损坏，这是因为非常细微的参数更改都可能会导致器件与其发布的规格不相符。

11.6 术语表

TI 术语表	本术语表列出并解释了术语、首字母缩略词和定义。

12 Mechanical, Packaging, and Orderable Information

The following pages include mechanical, packaging, and orderable information. This information is the most current data available for the designated devices. This data is subject to change without notice and revision of this document. For browser-based versions of this data sheet, refer to the left-hand navigation.

PACKAGING INFORMATION

Orderable Device	Status (1)	Package Type	Package Drawing	Pins	Package Qty	Eco Plan (2)	Lead finish/ Ball material (6)	MSL Peak Temp (3)	Op Temp (°C)	Device Marking (4/5)	Samples
DRV5055A1QDBZR	ACTIVE	SOT-23	DBZ	3	3000	RoHS & Green	SN	Level-2-260C-1 YEAR	-40 to 125	55A1	Samples
DRV5055A1QDBZT	ACTIVE	SOT-23	DBZ	3	250	RoHS & Green	SN	Level-2-260C-1 YEAR	-40 to 125	55A1	Samples
DRV5055A1QLPG	ACTIVE	TO-92	LPG	3	1000	RoHS & Green	SN	N / A for Pkg Type	-40 to 125	55A1	Samples
DRV5055A1QLPGM	ACTIVE	TO-92	LPG	3	3000	RoHS & Green	SN	N / A for Pkg Type	-40 to 125	55A1	Samples
DRV5055A2QDBZR	ACTIVE	SOT-23	DBZ	3	3000	RoHS & Green	SN	Level-2-260C-1 YEAR	-40 to 125	55A2	Samples
DRV5055A2QDBZT	ACTIVE	SOT-23	DBZ	3	250	RoHS & Green	SN	Level-2-260C-1 YEAR	-40 to 125	55A2	Samples
DRV5055A2QLPG	ACTIVE	TO-92	LPG	3	1000	RoHS & Green	SN	N / A for Pkg Type	-40 to 125	55A2	Samples
DRV5055A2QLPGM	ACTIVE	TO-92	LPG	3	3000	RoHS & Green	SN	N / A for Pkg Type	-40 to 125	55A2	Samples
DRV5055A3QDBZR	ACTIVE	SOT-23	DBZ	3	3000	RoHS & Green	SN	Level-2-260C-1 YEAR	-40 to 125	55A3	Samples
DRV5055A3QDBZT	ACTIVE	SOT-23	DBZ	3	250	RoHS & Green	SN	Level-2-260C-1 YEAR	-40 to 125	55A3	Samples
DRV5055A3QLPG	ACTIVE	TO-92	LPG	3	1000	RoHS & Green	SN	N / A for Pkg Type	-40 to 125	55A3	Samples
DRV5055A3QLPGM	ACTIVE	TO-92	LPG	3	3000	RoHS & Green	SN	N / A for Pkg Type	-40 to 125	55A3	Samples
DRV5055A4QDBZR	ACTIVE	SOT-23	DBZ	3	3000	RoHS & Green	SN	Level-2-260C-1 YEAR	-40 to 125	55A4	Samples
DRV5055A4QDBZT	ACTIVE	SOT-23	DBZ	3	250	RoHS & Green	SN	Level-2-260C-1 YEAR	-40 to 125	55A4	Samples
DRV5055A4QLPG	ACTIVE	TO-92	LPG	3	1000	RoHS & Green	SN	N / A for Pkg Type	-40 to 125	55A4	Samples
DRV5055A4QLPGM	ACTIVE	TO-92	LPG	3	3000	RoHS & Green	SN	N / A for Pkg Type	-40 to 125	55A4	Samples
DRV5055Z1QDBZR	ACTIVE	SOT-23	DBZ	3	3000	RoHS & Green	SN	Level-2-260C-1 YEAR	-40 to 125	55Z1	Samples
DRV5055Z1QDBZT	ACTIVE	SOT-23	DBZ	3	250	RoHS & Green	SN	Level-2-260C-1 YEAR	-40 to 125	55Z1	Samples
DRV5055Z2QDBZR	ACTIVE	SOT-23	DBZ	3	3000	RoHS & Green	SN	Level-2-260C-1 YEAR	-40 to 125	55Z2	Samples
DRV5055Z2QDBZT	ACTIVE	SOT-23	DBZ	3	250	RoHS & Green	SN	Level-2-260C-1 YEAR	-40 to 125	55Z2	Samples

Orderable Device	Status (1)	Package Type	Package Drawing	Pins	Package Qty	Eco Plan (2)	Lead finish/ Ball material (6)	MSL Peak Temp (3)	Op Temp (°C)	Device Marking (4/5)	Samples
DRV5055Z3QDBZR	ACTIVE	SOT-23	DBZ	3	3000	RoHS & Green	SN	Level-2-260C-1 YEAR	-40 to 125	55Z3	Samples
DRV5055Z3QDBZT	ACTIVE	SOT-23	DBZ	3	250	RoHS & Green	SN	Level-2-260C-1 YEAR	-40 to 125	55Z3	Samples
DRV5055Z4QDBZR	ACTIVE	SOT-23	DBZ	3	3000	RoHS & Green	SN	Level-2-260C-1 YEAR	-40 to 125	55Z4	Samples
DRV5055Z4QDBZT	ACTIVE	SOT-23	DBZ	3	250	RoHS & Green	SN	Level-2-260C-1 YEAR	-40 to 125	55Z4	Samples

(1) The marketing status values are defined as follows:
ACTIVE: Product device recommended for new designs.
LIFEBUY: TI has announced that the device will be discontinued, and a lifetime-buy period is in effect.
NRND: Not recommended for new designs. Device is in production to support existing customers, but TI does not recommend using this part in a new design.
PREVIEW: Device has been announced but is not in production. Samples may or may not be available.
OBSOLETE: TI has discontinued the production of the device.

(2) **RoHS:** TI defines "RoHS" to mean semiconductor products that are compliant with the current EU RoHS requirements for all 10 RoHS substances, including the requirement that RoHS substance do not exceed 0.1% by weight in homogeneous materials. Where designed to be soldered at high temperatures, "RoHS" products are suitable for use in specified lead-free processes. TI may reference these types of products as "Pb-Free".
RoHS Exempt: TI defines "RoHS Exempt" to mean products that contain lead but are compliant with EU RoHS pursuant to a specific EU RoHS exemption.
Green: TI defines "Green" to mean the content of Chlorine (Cl) and Bromine (Br) based flame retardants meet JS709B low halogen requirements of <=1000ppm threshold. Antimony trioxide based flame retardants must also meet the <=1000ppm threshold requirement.

(3) MSL, Peak Temp. - The Moisture Sensitivity Level rating according to the JEDEC industry standard classifications, and peak solder temperature.

(4) There may be additional marking, which relates to the logo, the lot trace code information, or the environmental category on the device.

(5) Multiple Device Markings will be inside parentheses. Only one Device Marking contained in parentheses and separated by a "~" will appear on a device. If a line is indented then it is a continuation of the previous line and the two combined represent the entire Device Marking for that device.

(6) Lead finish/Ball material - Orderable Devices may have multiple material finish options. Finish options are separated by a vertical ruled line. Lead finish/Ball material values may wrap to two lines if the finish value exceeds the maximum column width.

Important Information and Disclaimer: The information provided on this page represents TI's knowledge and belief as of the date that it is provided. TI bases its knowledge and belief on information provided by third parties, and makes no representation or warranty as to the accuracy of such information. Efforts are underway to better integrate information from third parties. TI has taken and continues to take reasonable steps to provide representative and accurate information but may not have conducted destructive testing or chemical analysis on incoming materials and chemicals. TI and TI suppliers consider certain information to be proprietary, and thus CAS numbers and other limited information may not be available for release.

In no event shall TI's liability arising out of such information exceed the total purchase price of the TI part(s) at issue in this document sold by TI to Customer on an annual basis.

TAPE AND REEL INFORMATION

REEL DIMENSIONS

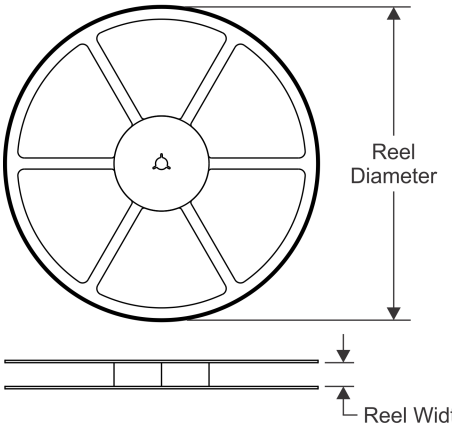

TAPE DIMENSIONS

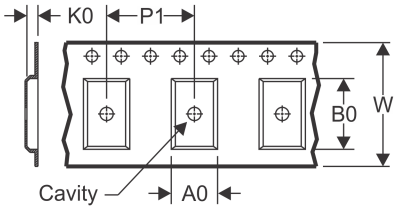

A0	Dimension designed to accommodate the component width
B0	Dimension designed to accommodate the component length
K0	Dimension designed to accommodate the component thickness
W	Overall width of the carrier tape
P1	Pitch between successive cavity centers

QUADRANT ASSIGNMENTS FOR PIN 1 ORIENTATION IN TAPE

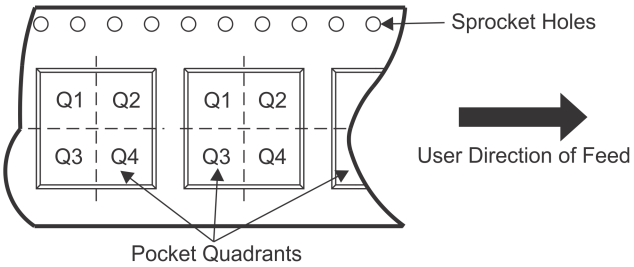

*All dimensions are nominal

Device	Package Type	Package Drawing	Pins	SPQ	Reel Diameter (mm)	Reel Width W1 (mm)	A0 (mm)	B0 (mm)	K0 (mm)	P1 (mm)	W (mm)	Pin1 Quadrant
DRV5055A1QDBZR	SOT-23	DBZ	3	3000	178.0	9.0	3.15	2.77	1.22	4.0	8.0	Q3
DRV5055A1QDBZR	SOT-23	DBZ	3	3000	180.0	8.4	3.15	2.77	1.22	4.0	8.0	Q3
DRV5055A1QDBZT	SOT-23	DBZ	3	250	178.0	9.0	3.15	2.77	1.22	4.0	8.0	Q3
DRV5055A1QDBZT	SOT-23	DBZ	3	250	180.0	8.4	3.15	2.77	1.22	4.0	8.0	Q3
DRV5055A2QDBZR	SOT-23	DBZ	3	3000	178.0	9.0	3.15	2.77	1.22	4.0	8.0	Q3
DRV5055A2QDBZR	SOT-23	DBZ	3	3000	180.0	8.4	3.15	2.77	1.22	4.0	8.0	Q3
DRV5055A2QDBZT	SOT-23	DBZ	3	250	178.0	9.0	3.15	2.77	1.22	4.0	8.0	Q3
DRV5055A2QDBZT	SOT-23	DBZ	3	250	180.0	8.4	3.15	2.77	1.22	4.0	8.0	Q3
DRV5055A3QDBZR	SOT-23	DBZ	3	3000	178.0	9.0	3.15	2.77	1.22	4.0	8.0	Q3
DRV5055A3QDBZR	SOT-23	DBZ	3	3000	180.0	8.4	3.15	2.77	1.22	4.0	8.0	Q3
DRV5055A3QDBZT	SOT-23	DBZ	3	250	180.0	8.4	3.15	2.77	1.22	4.0	8.0	Q3
DRV5055A3QDBZT	SOT-23	DBZ	3	250	178.0	9.0	3.15	2.77	1.22	4.0	8.0	Q3
DRV5055A4QDBZR	SOT-23	DBZ	3	3000	178.0	9.0	3.15	2.77	1.22	4.0	8.0	Q3
DRV5055A4QDBZR	SOT-23	DBZ	3	3000	180.0	8.4	3.15	2.77	1.22	4.0	8.0	Q3
DRV5055A4QDBZT	SOT-23	DBZ	3	250	180.0	8.4	3.15	2.77	1.22	4.0	8.0	Q3
DRV5055A4QDBZT	SOT-23	DBZ	3	250	178.0	9.0	3.15	2.77	1.22	4.0	8.0	Q3
DRV5055Z1QDBZR	SOT-23	DBZ	3	3000	180.0	8.4	3.15	2.77	1.22	4.0	8.0	Q3
DRV5055Z1QDBZT	SOT-23	DBZ	3	250	180.0	8.4	3.15	2.77	1.22	4.0	8.0	Q3

Device	Package Type	Package Drawing	Pins	SPQ	Reel Diameter (mm)	Reel Width W1 (mm)	A0 (mm)	B0 (mm)	K0 (mm)	P1 (mm)	W (mm)	Pin1 Quadrant
DRV5055Z2QDBZR	SOT-23	DBZ	3	3000	180.0	8.4	3.15	2.77	1.22	4.0	8.0	Q3
DRV5055Z2QDBZT	SOT-23	DBZ	3	250	180.0	8.4	3.15	2.77	1.22	4.0	8.0	Q3
DRV5055Z3QDBZR	SOT-23	DBZ	3	3000	180.0	8.4	3.15	2.77	1.22	4.0	8.0	Q3
DRV5055Z3QDBZT	SOT-23	DBZ	3	250	180.0	8.4	3.15	2.77	1.22	4.0	8.0	Q3
DRV5055Z4QDBZR	SOT-23	DBZ	3	3000	180.0	8.4	3.15	2.77	1.22	4.0	8.0	Q3
DRV5055Z4QDBZT	SOT-23	DBZ	3	250	180.0	8.4	3.15	2.77	1.22	4.0	8.0	Q3

TAPE AND REEL BOX DIMENSIONS

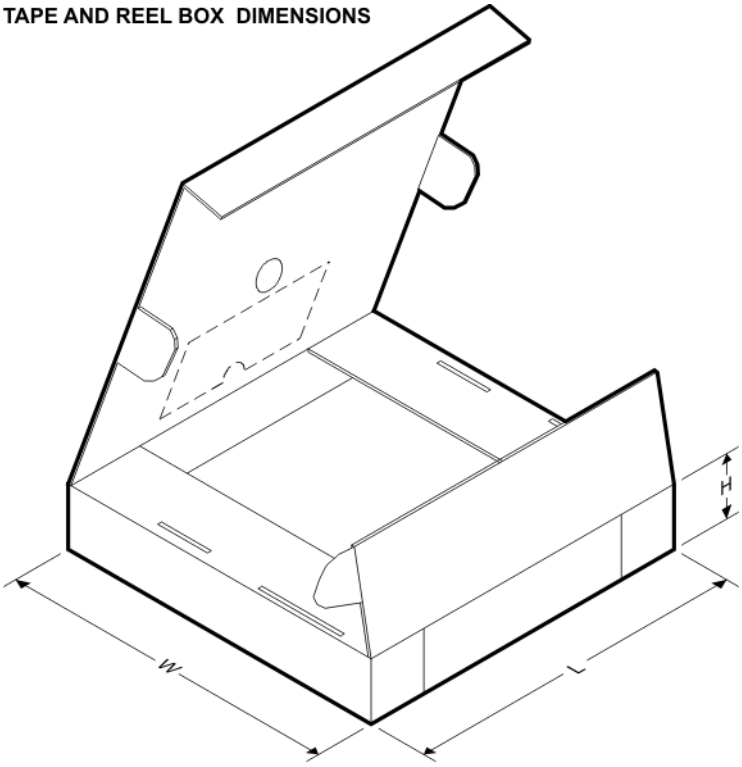

*All dimensions are nominal

Device	Package Type	Package Drawing	Pins	SPQ	Length (mm)	Width (mm)	Height (mm)
DRV5055A1QDBZR	SOT-23	DBZ	3	3000	180.0	180.0	18.0
DRV5055A1QDBZR	SOT-23	DBZ	3	3000	213.0	191.0	35.0
DRV5055A1QDBZT	SOT-23	DBZ	3	250	180.0	180.0	18.0
DRV5055A1QDBZT	SOT-23	DBZ	3	250	213.0	191.0	35.0
DRV5055A2QDBZR	SOT-23	DBZ	3	3000	180.0	180.0	18.0
DRV5055A2QDBZR	SOT-23	DBZ	3	3000	213.0	191.0	35.0
DRV5055A2QDBZT	SOT-23	DBZ	3	250	180.0	180.0	18.0
DRV5055A2QDBZT	SOT-23	DBZ	3	250	213.0	191.0	35.0
DRV5055A3QDBZR	SOT-23	DBZ	3	3000	180.0	180.0	18.0
DRV5055A3QDBZR	SOT-23	DBZ	3	3000	213.0	191.0	35.0
DRV5055A3QDBZT	SOT-23	DBZ	3	250	213.0	191.0	35.0

Device	Package Type	Package Drawing	Pins	SPQ	Length (mm)	Width (mm)	Height (mm)
DRV5055A3QDBZT	SOT-23	DBZ	3	250	180.0	180.0	18.0
DRV5055A4QDBZR	SOT-23	DBZ	3	3000	180.0	180.0	18.0
DRV5055A4QDBZR	SOT-23	DBZ	3	3000	213.0	191.0	35.0
DRV5055A4QDBZT	SOT-23	DBZ	3	250	213.0	191.0	35.0
DRV5055A4QDBZT	SOT-23	DBZ	3	250	180.0	180.0	18.0
DRV5055Z1QDBZR	SOT-23	DBZ	3	3000	213.0	191.0	35.0
DRV5055Z1QDBZT	SOT-23	DBZ	3	250	213.0	191.0	35.0
DRV5055Z2QDBZR	SOT-23	DBZ	3	3000	213.0	191.0	35.0
DRV5055Z2QDBZT	SOT-23	DBZ	3	250	213.0	191.0	35.0
DRV5055Z3QDBZR	SOT-23	DBZ	3	3000	213.0	191.0	35.0
DRV5055Z3QDBZT	SOT-23	DBZ	3	250	213.0	191.0	35.0
DRV5055Z4QDBZR	SOT-23	DBZ	3	3000	213.0	191.0	35.0
DRV5055Z4QDBZT	SOT-23	DBZ	3	250	213.0	191.0	35.0

PACKAGE OUTLINE

LPG0003A

TO-92 - 5.05 mm max height

TRANSISTOR OUTLINE

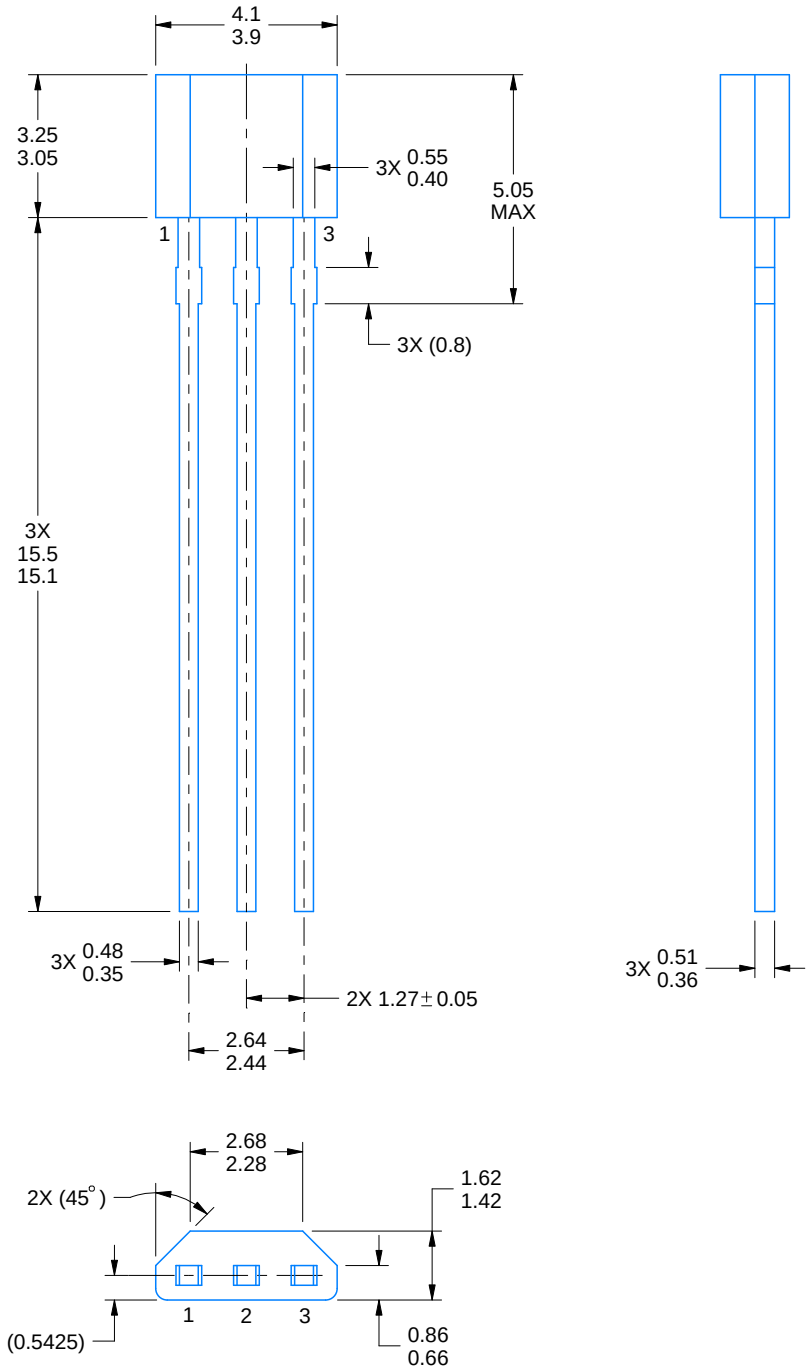

4221343/C 01/2018

NOTES:

1. All linear dimensions are in millimeters. Any dimensions in parenthesis are for reference only. Dimensioning and tolerancing per ASME Y14.5M.
2. This drawing is subject to change without notice.

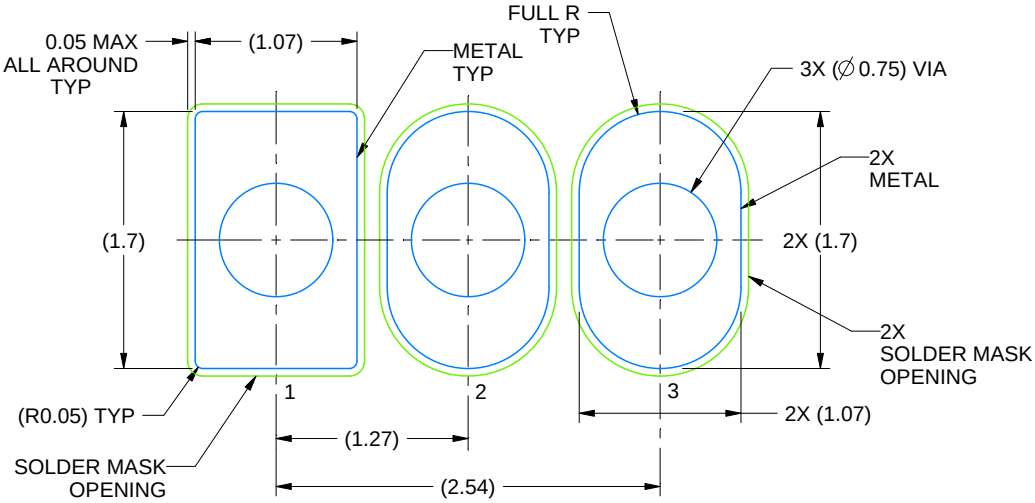

LAND PATTERN EXAMPLE
NON-SOLDER MASK DEFINED
SCALE:20X

4221343/C 01/2018

TRANSISTOR OUTLINE

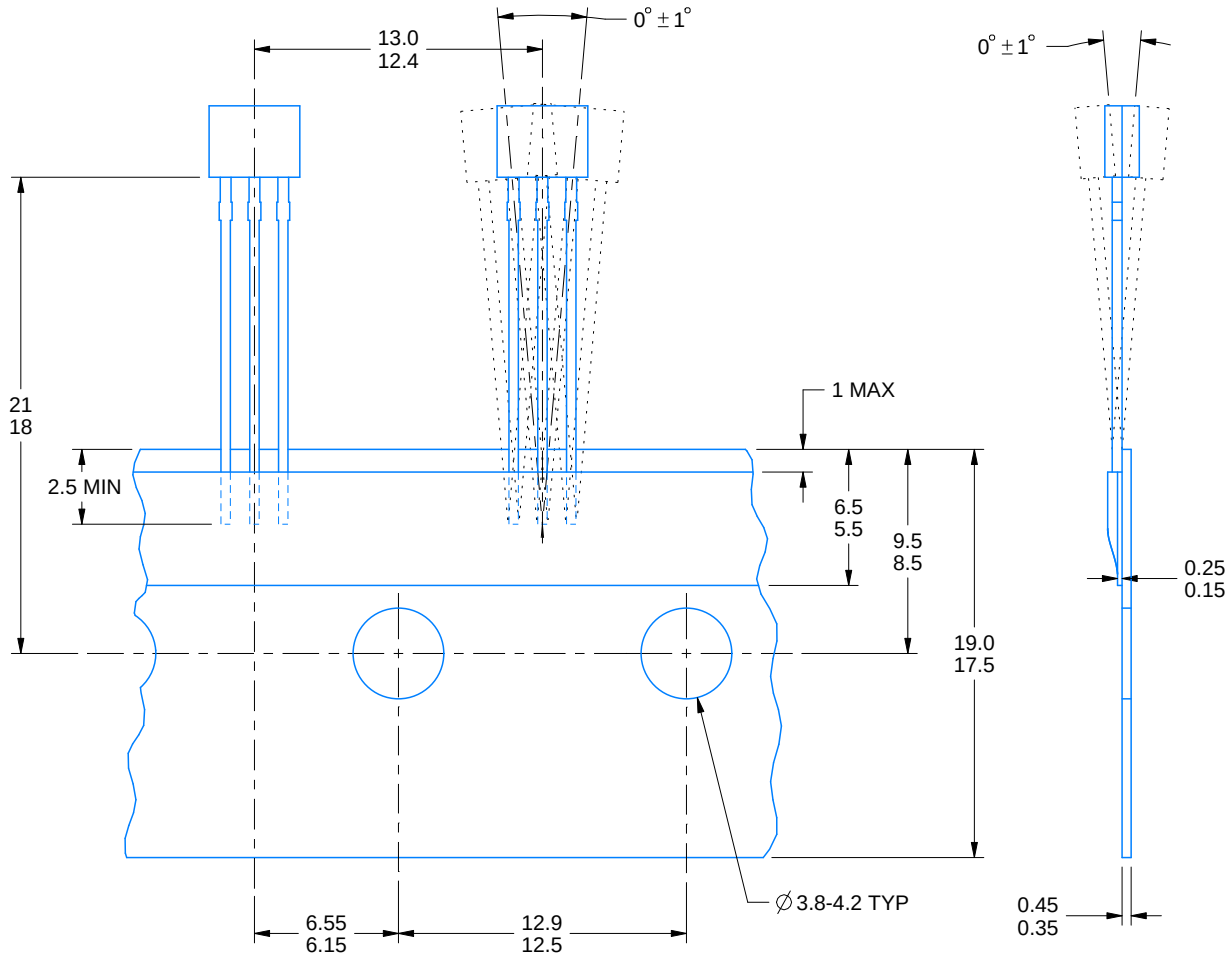

4221343/C 01/2018

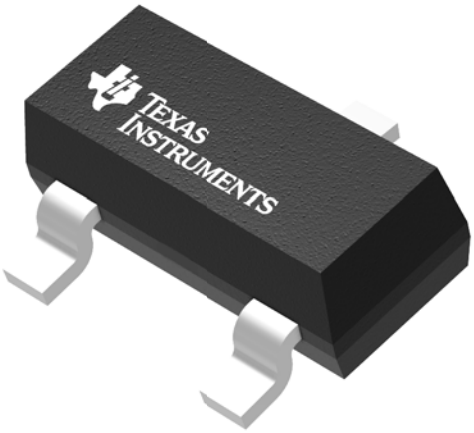

Images above are just a representation of the package family, actual package may vary.
Refer to the product data sheet for package details.

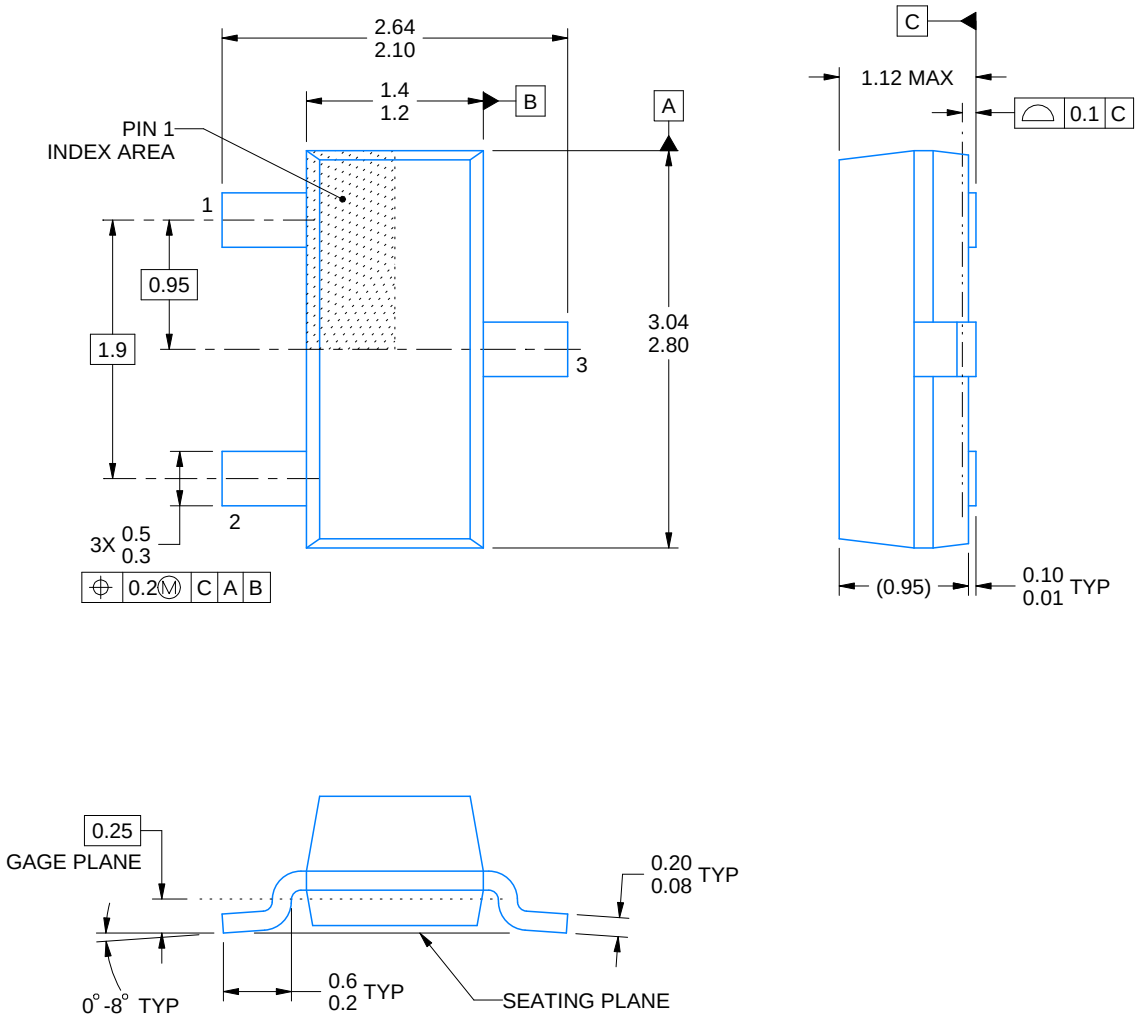

4214838/C 04/2017

NOTES:

1. All linear dimensions are in millimeters. Any dimensions in parenthesis are for reference only. Dimensioning and tolerancing per ASME Y14.5M.
2. This drawing is subject to change without notice.
3. Reference JEDEC registration TO-236, except minimum foot length.

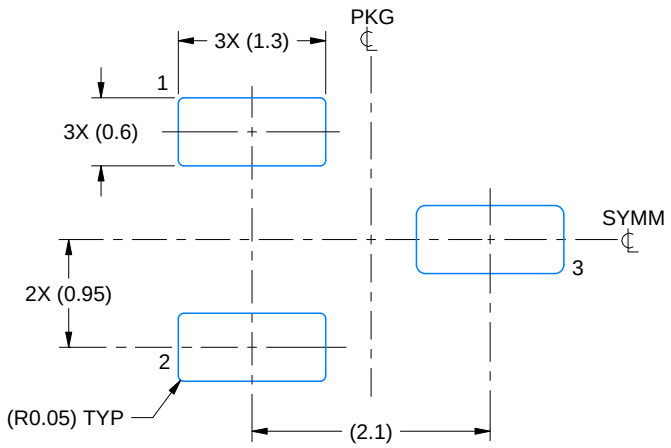

LAND PATTERN EXAMPLE
SCALE:15X

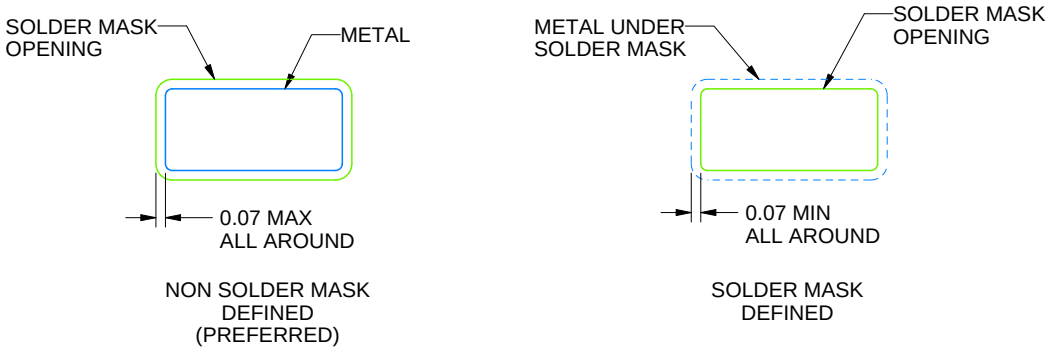

SOLDER MASK DETAILS

4214838/C 04/2017

NOTES: (continued)

4. Publication IPC-7351 may have alternate designs.
5. Solder mask tolerances between and around signal pads can vary based on board fabrication site.

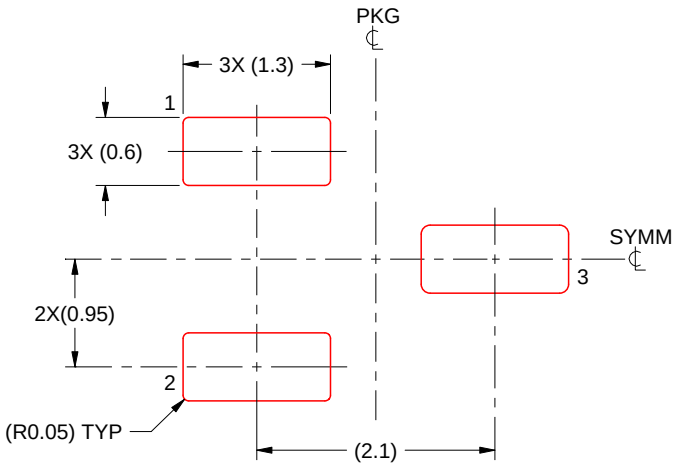

SOLDER PASTE EXAMPLE
BASED ON 0.125 THICK STENCIL
SCALE:15X

4214838/C 04/2017

NOTES: (continued)

6. Laser cutting apertures with trapezoidal walls and rounded corners may offer better paste release. IPC-7525 may have alternate design recommendations.
7. Board assembly site may have different recommendations for stencil design.

重要声明和免责声明

TI 提供技术和可靠性数据（包括数据表）、设计资源（包括参考设计）、应用或其他设计建议、网络工具、安全信息和其他资源，不保证没有瑕疵且不做出任何明示或暗示的担保，包括但不限于对适销性、某特定用途方面的适用性或不侵犯任何第三方知识产权的暗示担保。

这些资源可供使用 TI 产品进行设计的熟练开发人员使用。您将自行承担以下全部责任：(1) 针对您的应用选择合适的 TI 产品，(2) 设计、验证并测试您的应用，(3) 确保您的应用满足相应标准以及任何其他安全、安保或其他要求。这些资源如有变更，恕不另行通知。TI 授权您仅可将这些资源用于研发本资源所述的 TI 产品的应用。严禁对这些资源进行其他复制或展示。您无权使用任何其他 TI 知识产权或任何第三方知识产权。您应全额赔偿因在这些资源的使用中对 TI 及其代表造成的任何索赔、损害、成本、损失和债务，TI 对此概不负责。

TI 提供的产品受 TI 的销售条款 (https:www.ti.com.cn/zh-cn/legal/termsofsale.html) 或 ti.com.cn 上其他适用条款/TI 产品随附的其他适用条款的约束。TI 提供这些资源并不会扩展或以其他方式更改 TI 针对 TI 产品发布的适用的担保或担保免责声明。

邮寄地址：上海市浦东新区世纪大道 1568 号中建大厦 32 楼，邮政编码：200122
Copyright © 2021 德州仪器半导体技术（上海）有限公司