- **Member of the Texas Instruments Widebus™ Family**
- **Load Clock and Unload Clock Can Be Asynchronous or Coincident**
- **256 Words by 18 Bits**
- **Low-Power Advanced CMOS Technology**
- **Full, Empty, and Half-Full Flags**
- **Programmable Almost-Full/Almost-Empty Flag**
- **Fast Access Times of 15 ns With a 50-pF Load and All Data Outputs Switching Simultaneously**
- **Data Rates up to 50 MHz**
- **3-State Outputs**
- **Pin-to-Pin Compatible With SN74ACT7804 and SN74ACT7814**
- **Packaged in Shrink Small-Outline 300-mil Package Using 25-mil Center-to-Center Spacing**

DL PACKAGE
(TOP VIEW)

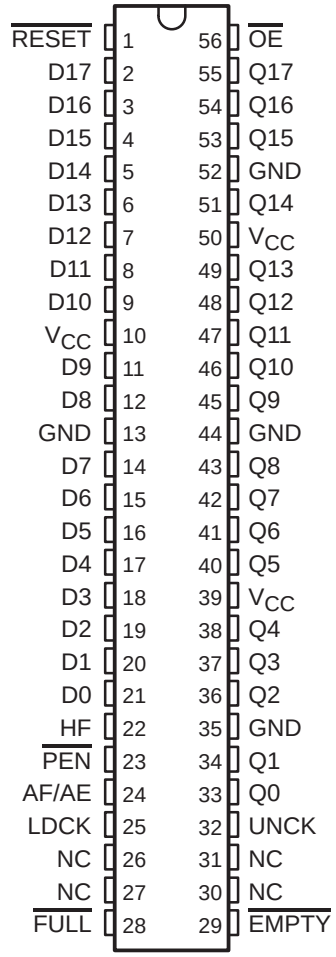

NC – No internal connection

description

A FIFO memory is a storage device that allows data to be written into and read from its array at independent data rates. The SN74ACT7806 is a 256-word by 18-bit FIFO for high speed and fast access times. It processes data at rates up to 50 MHz and access times of 15 ns in a bit-parallel format.

Data is written into memory on a low-to-high transition at the load clock (LDCK) input and is read out on a low-to-high transition at the unload clock (UNCK) input. The memory is full when the number of words clocked in exceeds the number of words clocked out by 256. When the memory is full, LDCK signals have no effect on the data residing in memory. When the memory is empty, UNCK signals have no effect.

Status of the FIFO memory is monitored by the full ($\overline{FULL}$), empty ($\overline{EMPTY}$), half-full (HF), and almost-full/almost-empty (AF/AE) flags. The $\overline{FULL}$ output is low when the memory is full and high when the memory is not full. The $\overline{EMPTY}$ output is low when the memory is empty and high when it is not empty. The HF output is high when the FIFO contains 128 or more words. The AF/AE status flag is a programmable flag. The first one or two low-to-high transitions of LDCK after reset are used to program the almost-empty offset value (X) and the almost-full offset value (Y) if program enable ($\overline{PEN}$) is low. The AF/AE flag is high when the FIFO contains X or fewer words or (256 – Y) or more words. The AF/AE flag is low when the FIFO contains between (X + 1) and (255 – Y) words.

Please be aware that an important notice concerning availability, standard warranty, and use in critical applications of Texas Instruments semiconductor products and disclaimers thereto appears at the end of this data sheet.

Widebus is a trademark of Texas Instruments Incorporated.

PRODUCTION DATA information is current as of publication date. Products conform to specifications per the terms of Texas Instruments standard warranty. Production processing does not necessarily include testing of all parameters.

Copyright © 1998, Texas Instruments Incorporated

description (continued)

A low level on the reset ($\overline{\text{RESET}}$) input resets the internal stack pointers and sets $\overline{\text{FULL}}$ high, HF low, and $\overline{\text{EMPTY}}$ low. The Q outputs are not reset to any specific logic level. The FIFO must be reset upon power up.The first word loaded into empty memory causes $\overline{\text{EMPTY}}$ to go high and the data to appear on the Q outputs. It is important to note that the first word does not have to be unloaded. The data outputs are noninverting with respect to the data inputs and are in the high-impedance state when the output-enable ($\overline{\text{OE}}$) input is high.

The SN74ACT7806 is characterized for operation from 0°C to 70°C.

logic symbol†

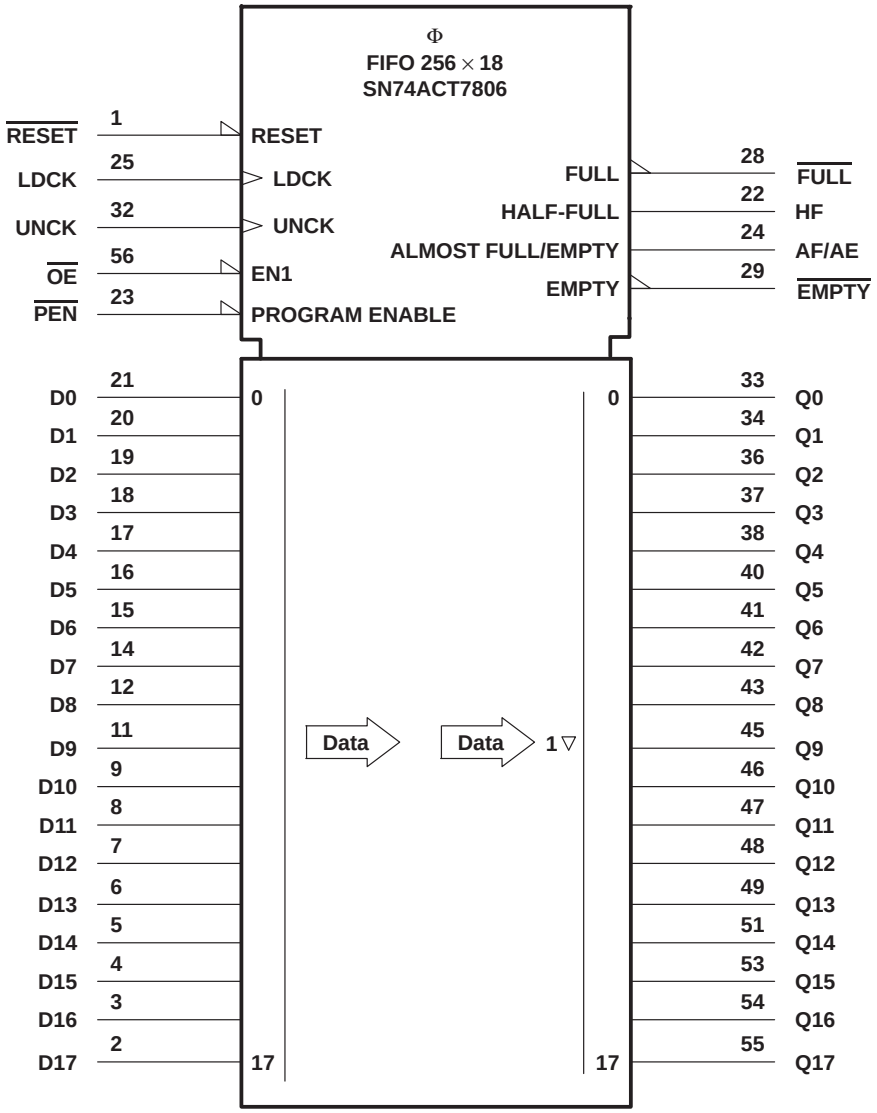

† This symbol is in accordance with ANSI/IEEE Std 91-1984 and IEC Publication 617-12.

functional block diagram

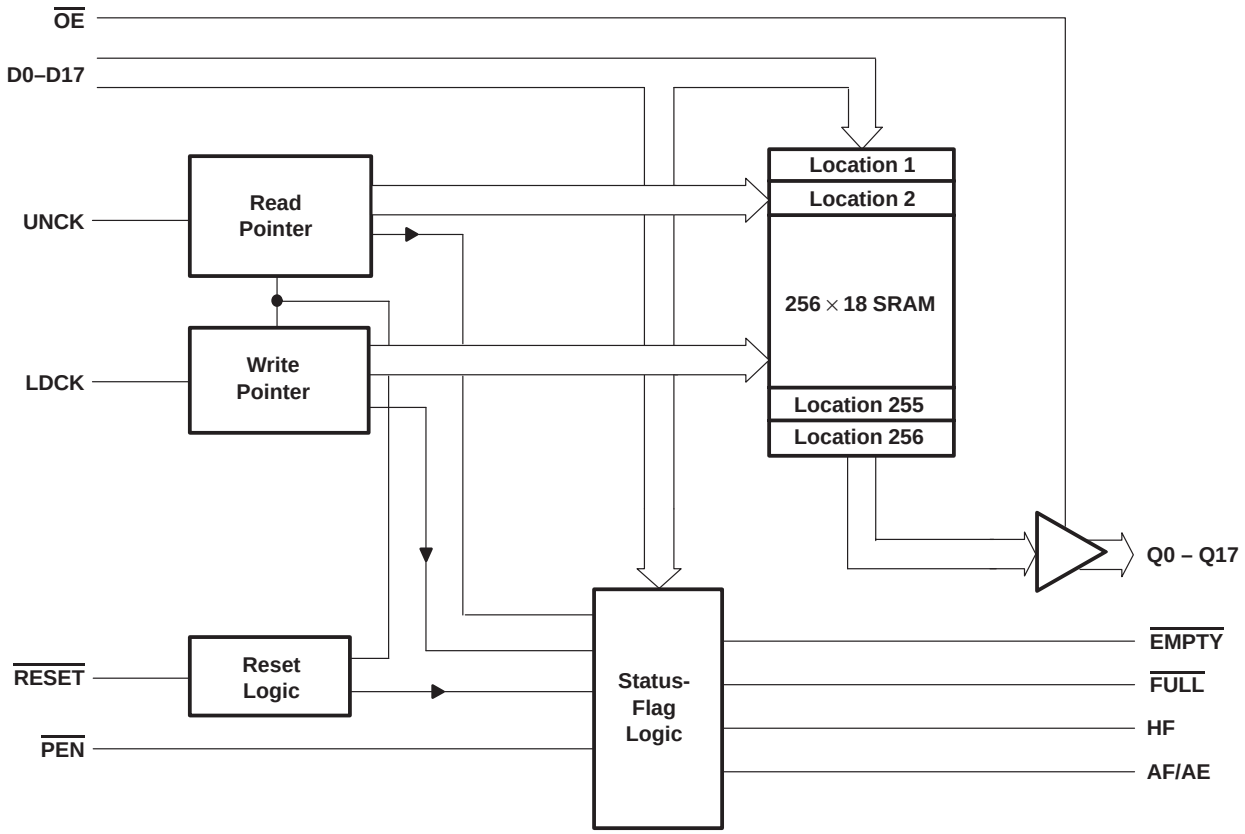

Terminal Functions

TERMINAL NAME	TERMINAL NO.	I/O	DESCRIPTION
AF/AE	24	O	Almost-full/almost-empty flag. Depth-offset values can be programmed for AF/AE, or the default value of 32 can be used for both the almost-empty offset (X) and the almost-full offset (Y). AF/AE is high when memory contains X or fewer words or (256 – Y) or more words. AF/AE is high after reset.
D0–D17	2–9, 11–12, 12–14	I	18-bit data input port
$\overline{\text{EMPTY}}$	29	O	Empty flag. $\overline{\text{EMPTY}}$ is high when the FIFO memory is not empty; $\overline{\text{EMPTY}}$ is low when the FIFO memory is empty or upon assertion of $\overline{\text{RESET}}$.
$\overline{\text{FULL}}$	28	O	Full flag. $\overline{\text{FULL}}$ is high when the FIFO memory is not full or upon assertion of $\overline{\text{RESET}}$; $\overline{\text{FULL}}$ is low when the FIFO memory is full.
HF	22	O	Half-full flag. HF is high when the FIFO memory contains 128 or more words. HF is low after reset.
LDCK	25	I	Load clock. Data is written to the FIFO on the rising edge of LDCK when $\overline{\text{FULL}}$ is high.
$\overline{\text{OE}}$	56	I	Output enable. When $\overline{\text{OE}}$ is high, the data outputs are in the high-impedance state.
$\overline{\text{PEN}}$	23	I	Program enable. After reset and before the first word is written to the FIFO, the binary value on D0–D6 is latched as an AF/AE offset value when $\overline{\text{PEN}}$ is low and WRTCLK is high.
Q0–Q17	33–34, 36–38, 40–43, 45–49, 51, 53–55	O	18-bit data output port
$\overline{\text{RESET}}$	1	I	Reset. A low level on this input resets the FIFO and drives $\overline{\text{FULL}}$ high and HF and $\overline{\text{EMPTY}}$ low.
UNCK	32	I	Unload clock. Data is read from the FIFO on the rising edge of UNCK when $\overline{\text{EMPTY}}$ is high.

offset values for AF/AE

The AF/AE flag has two programmable limits, the almost-empty offset value (X) and the almost-full offset value (Y). They can be programmed after the FIFO is reset and before the first word is written to memory. The AF/AE flag is high when the FIFO contains X or fewer words or (256 – Y) or more words.

To program the offset values, $\overline{PEN}$ can be brought low after reset only when LDCK is low. On the following low-to-high transition of LDCK, the binary value on D0–D6 is stored as the almost-empty offset value (X) and the almost-full offset value (Y). Holding $\overline{PEN}$ low for another low-to-high transition of LDCK reprograms Y to the binary value on D0–D6 at the time of the second LDCK low-to-high transition. Writes to the FIFO memory are disabled while the offsets are programmed. A maximum value of 127 can be programmed for either X or Y (see Figure 1). To use the default values of X = Y = 32, $\overline{PEN}$ must be held high.

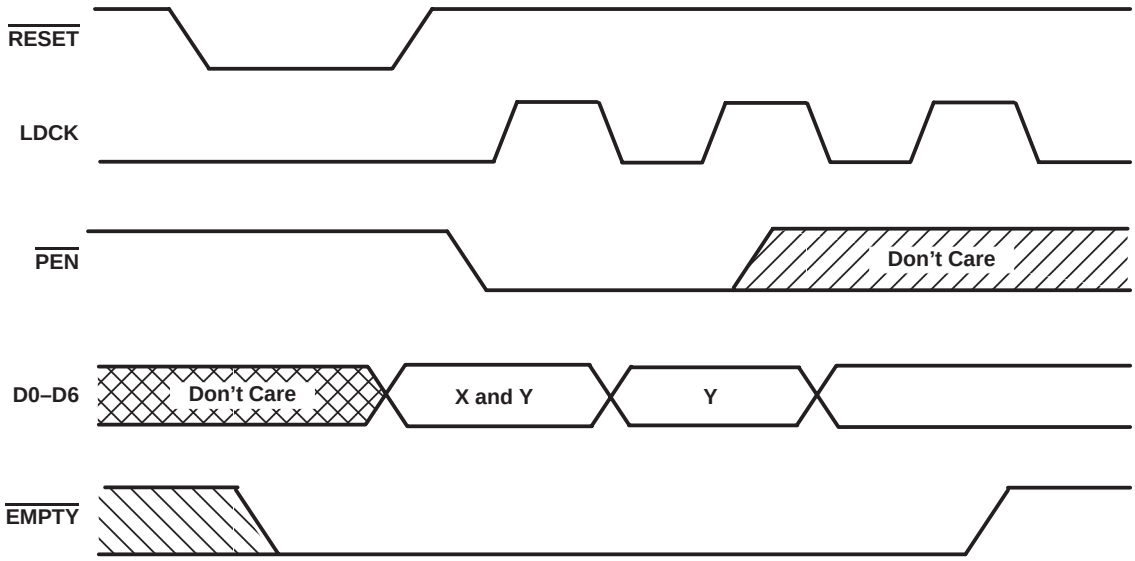

Figure 1. Programming X and Y Separately

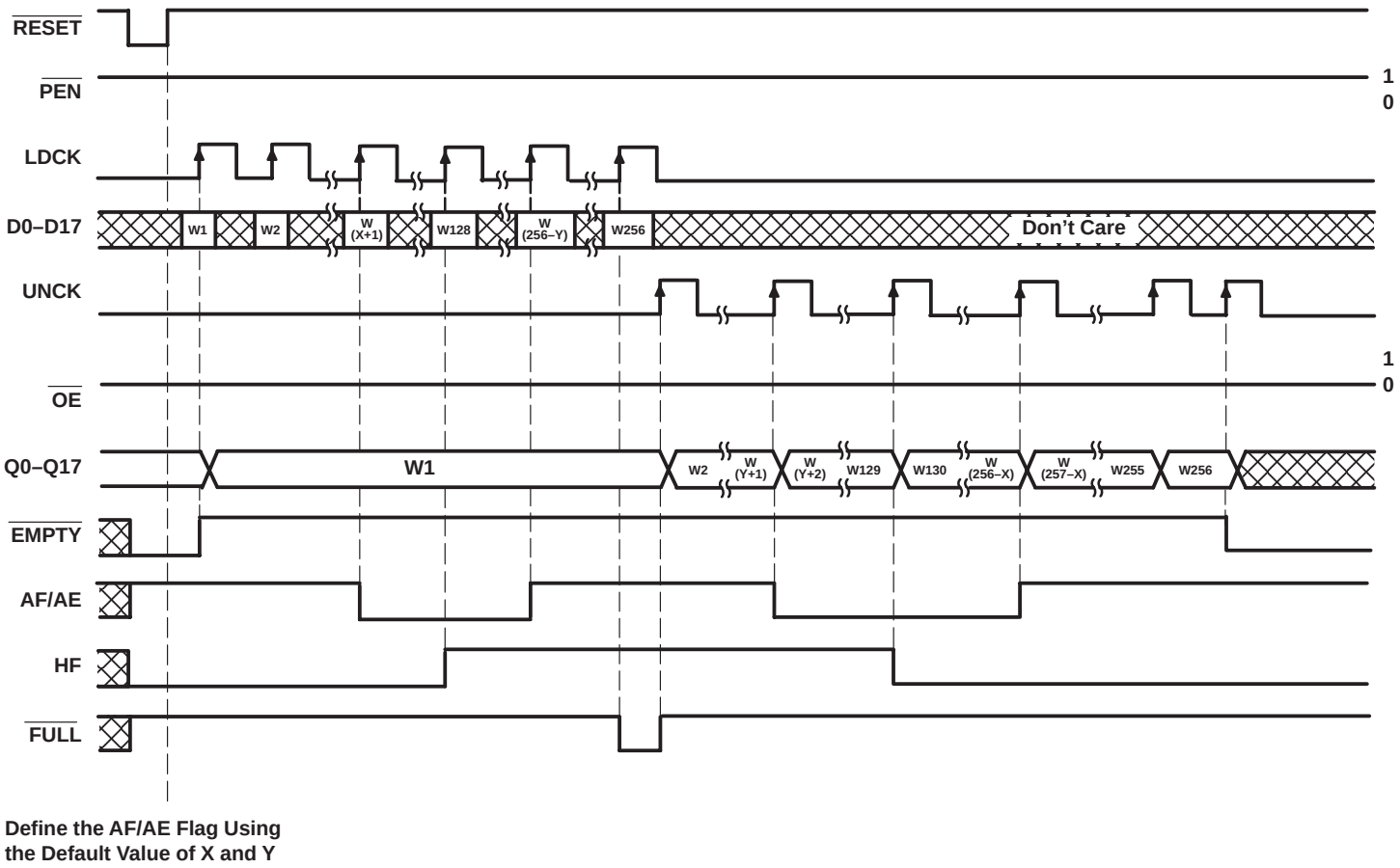

Figure 2. Write, Read, and Flag Timing Reference

absolute maximum ratings over operating free-air temperature range (unless otherwise noted)†

Supply voltage range, V_{CC} . . . . . –0.5 V to 7 V
Input voltage range, V_I . . . . . –0.5 V to 7 V
Voltage range applied to a disabled 3-state output . . . . . –0.5 V to 5.5 V
Package thermal impedance, θ_{JA} (see Note 1) . . . . . 74°C/W
Storage temperature range, T_{stg} . . . . . –65°C to 150°C

† Stresses beyond those listed under "absolute maximum ratings" may cause permanent damage to the device. These are stress ratings only, and functional operation of the device at these or any other conditions beyond those indicated under "recommended operating conditions" is not implied. Exposure to absolute-maximum-rated conditions for extended periods may affect device reliability.

NOTE 1: The package thermal impedance is calculated in accordance with JESD 51.

recommended operating conditions

			'ACT7806-20		'ACT7806-25		'ACT7806-40		UNIT
			MIN	MAX	MIN	MAX	MIN	MAX	
V_{CC}	Supply voltage		4.5	5.5	4.5	5.5	4.5	5.5	V
V_{IH}	High-level input voltage		2		2		2		V
V_{IL}	Low-level input voltage			0.8		0.8		0.8	V
I_{OH}	High-level output current	Q outputs, flags		–8		–8		–8	mA
I_{OL}	Low-level output current	Q outputs		16		16		16	mA
		Flags		8		8		8	
T_A	Operating free-air temperature		0	70	0	70	0	70	°C

electrical characteristics over recommended operating free-air temperature range (unless otherwise noted)

PARAMETER		TEST CONDITIONS		MIN	TYP‡	MAX	UNIT
V_{OH}		V_{CC} = 4.5 V,	I_{OH} = –8 mA	2.4			V
V_{OL}	Flags	V_{CC} = 4.5 V,	I_{OL} = 8 mA			0.5	V
	Q outputs	V_{CC} = 4.5 V,	I_{OL} = 16 mA			0.5	
I_I		V_{CC} = 5.5 V,	$V_I = V_{CC}$ or 0			±5	µA
I_{OZ}		V_{CC} = 5.5 V,	$V_O = V_{CC}$ or 0			±5	µA
I_{CC}		V_{CC} = 5.5 V,	$V_I = V_{CC}$ – 0.2 V or 0			400	µA
ΔI_{CC}§		V_{CC} = 5.5 V,	One input at 3.4 V, Other inputs at V_{CC} or GND			1	mA
C_i		V_I = 0,	f = 1 MHz		4		pF
C_o		V_O = 0,	f = 1 MHz		8		pF

‡ All typical values are at V_{CC} = 5 V, T_A = 25°C.
§ This is the supply current for each input that is at one of the specified TTL voltage levels rather than 0 V or V_{CC}.

timing requirements over recommended operating conditions (see Figures 1 through 3)

			’ACT7806-20		’ACT7806-25		’ACT7806-40		UNIT
			MIN	MAX	MIN	MAX	MIN	MAX	
f_{clock}	Clock frequency			50		40		25	MHz
t_w	Pulse duration	LDCK high or low	7		8		12		ns
		UNCK high or low	7		8		12		
		$\overline{PEN}$ low	7		8		12		
		$\overline{RESET}$ low	10		10		12		
t_{su}	Setup time	D0–D17 before LDCK↑	5		5		5		ns
		$\overline{PEN}$ before LDCK↑	5		5		5		
		LDCK inactive before $\overline{RESET}$ high	5		6		6		
t_h	Hold time	D0–D17 after LDCK↑	0		0		0		ns
		LDCK inactive after $\overline{RESET}$ high	5		6		6		
		$\overline{PEN}$ low after LDCK↑	3		3		3		
		$\overline{PEN}$ high after LDCK↓	0		0		0		

switching characteristics over recommended ranges of supply voltage and operating free-air temperature, C_L = 50 pF (unless otherwise noted) (see Figures 5 and 6)

PARAMETER	FROM (INPUT)	TO (OUTPUT)	’ACT7806-20			’ACT7806-25		’ACT7806-40		UNIT
			MIN	TYP†	MAX	MIN	MAX	MIN	MAX	
f_{max}	LDCK or UNCK		50			40		25		MHz
t_{pd}	LDCK↑	Any Q	9		20	9	22	9	24	ns
	UNCK↑		6	11.5	15	6	18	6	20	
t_{pd}‡	UNCK↑	Any Q		10.5						ns
t_{PLH}	LDCK↑	$\overline{EMPTY}$	6		15	6	17	6	19	ns
t_{PHL}	UNCK↑	$\overline{EMPTY}$	6		15	6	17	6	19	ns
	$\overline{RESET}$ low		4		16	4	18	4	20	
	LDCK↑	$\overline{FULL}$	6		15	6	17	6	19	
t_{PLH}	UNCK↑	$\overline{FULL}$	6		15	6	17	6	19	ns
	$\overline{RESET}$ low		4		18	4	20	4	22	
t_{pd}	LDCK↑	AF/AE	7		18	7	20	7	22	ns
	UNCK↑		7		18	7	20	7	22	
t_{PLH}	$\overline{RESET}$ low	AF/AE	2		10	2	12	2	14	ns
	LDCK↑	HF	5		18	5	20	5	22	
t_{PHL}	UNCK↑	HF	7		18	7	20	7	22	ns
	$\overline{RESET}$ low		3		12	3	14	3	16	
t_{en}	$\overline{OE}$	Any Q	2		9	2	10	2	11	ns
t_{dis}	$\overline{OE}$	Any Q	2		10	2	11	2	12	ns

† All typical values are at V_{CC} = 5 V, T_A = 25°C.
‡ This parameter is measured at C_L = 30 pF (see Figure 4).

operating characteristics, V_{CC} = 5 V, T_A = 25°C

PARAMETER			TEST CONDITIONS	TYP	UNIT
C_{pd}	Power dissipation capacitance per FIFO channel	Outputs enabled	C_L = 50 pF, f = 5 MHz	53	pF

PARAMETER MEASUREMENT INFORMATION

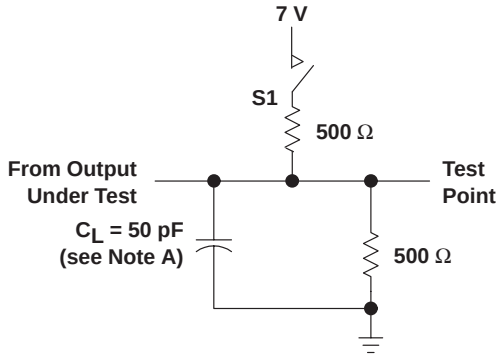

LOAD CIRCUIT

PARAMETER		S1
t_{en}	t_{PZH}	Open
	t_{PZL}	Closed
t_{dis}	t_{PHZ}	Open
	t_{PLZ}	Closed
t_{pd}	t_{PLH}	Open
	t_{PHL}	Open

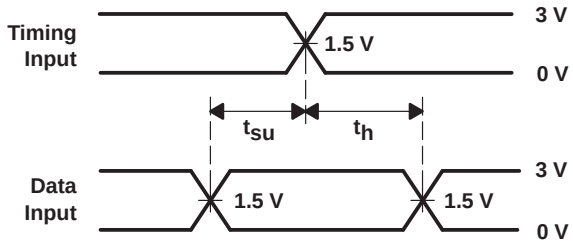

VOLTAGE WAVEFORMS
SETUP AND HOLD TIMES

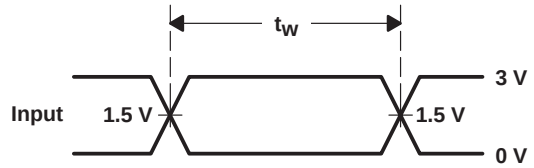

VOLTAGE WAVEFORMS
PULSE DURATION

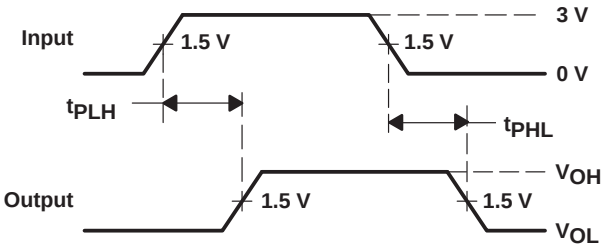

VOLTAGE WAVEFORMS
PROPAGATION DELAY TIMES

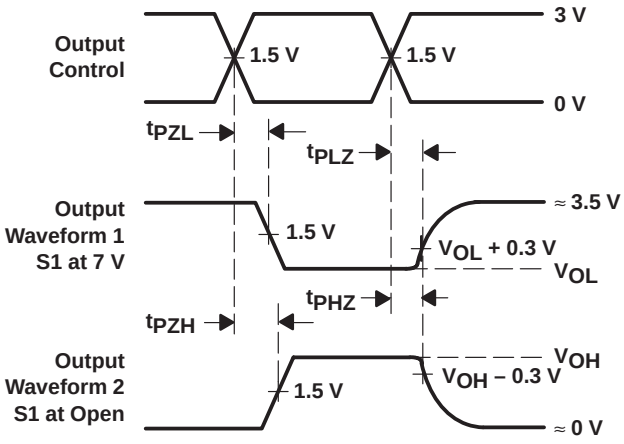

VOLTAGE WAVEFORMS
ENABLE AND DISABLE TIMES

NOTE A: C_L includes probe and jig capacitance.

Figure 3. Load Circuit and Voltage Waveforms

TYPICAL CHARACTERISTICS

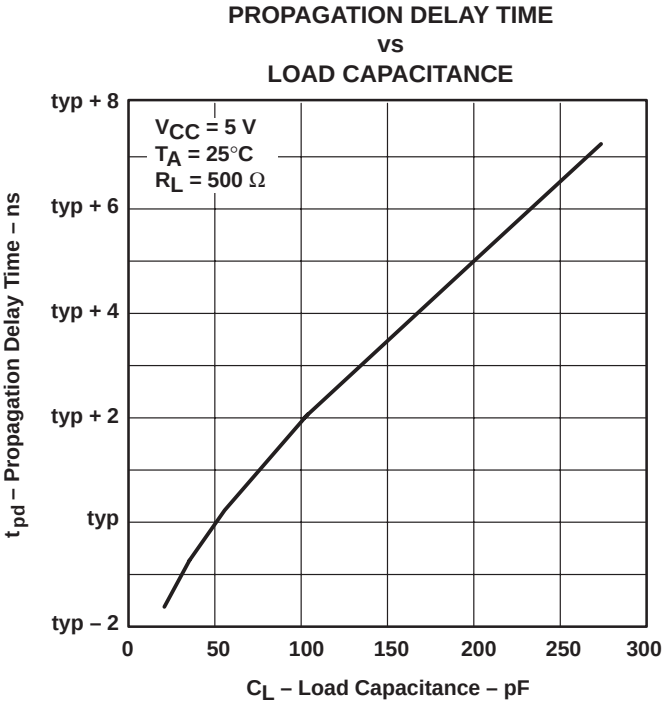

Figure 4

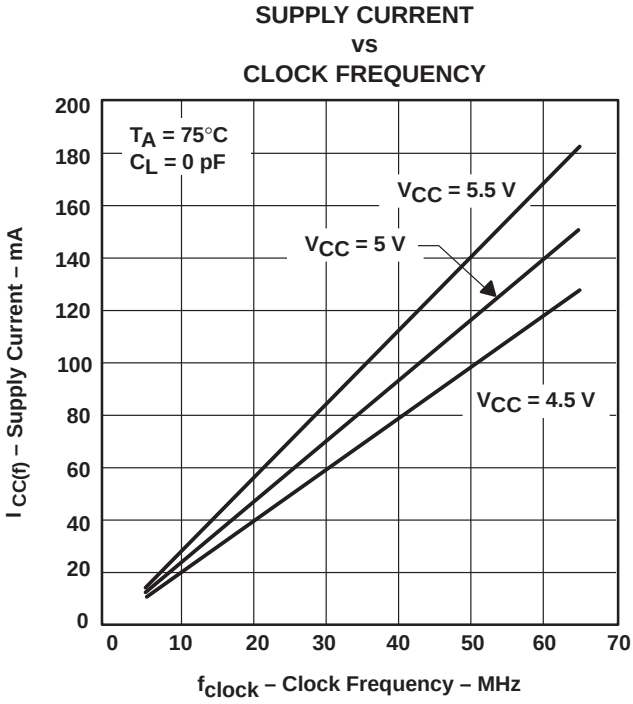

Figure 5

APPLICATION INFORMATION

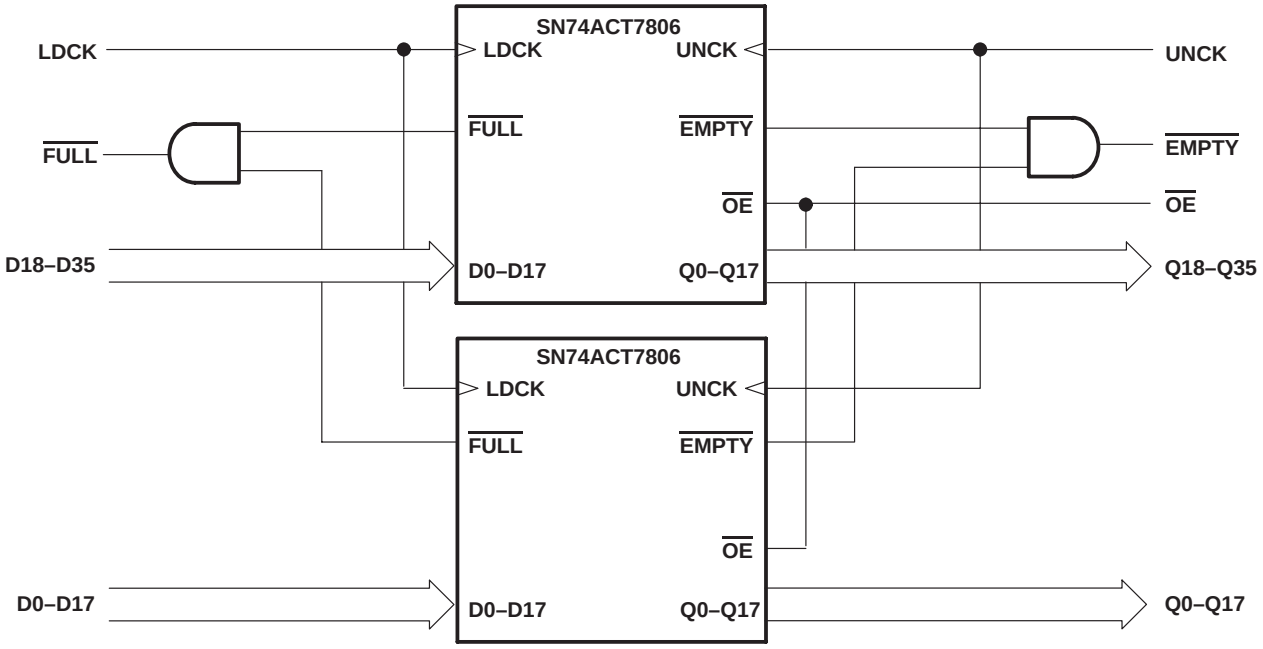

Figure 6. Word-Width Expansion: 256 × 36 Bits

PACKAGING INFORMATION

Orderable Device	Status (1)	Package Type	Package Drawing	Pins	Package Qty	Eco Plan (2)	Lead finish/ Ball material (6)	MSL Peak Temp (3)	Op Temp (°C)	Device Marking (4/5)	Samples
SN74ACT7806-20DL	ACTIVE	SSOP	DL	56	20	RoHS & Green	NIPDAU	Level-1-260C-UNLIM	0 to 70	ACT7806-20	Samples
SN74ACT7806-40DL	ACTIVE	SSOP	DL	56	20	RoHS & Green	NIPDAU	Level-1-260C-UNLIM	0 to 70	ACT7806-40	Samples

(1) The marketing status values are defined as follows:
ACTIVE: Product device recommended for new designs.
LIFEBUY: TI has announced that the device will be discontinued, and a lifetime-buy period is in effect.
NRND: Not recommended for new designs. Device is in production to support existing customers, but TI does not recommend using this part in a new design.
PREVIEW: Device has been announced but is not in production. Samples may or may not be available.
OBSOLETE: TI has discontinued the production of the device.

(2) **RoHS:** TI defines "RoHS" to mean semiconductor products that are compliant with the current EU RoHS requirements for all 10 RoHS substances, including the requirement that RoHS substance do not exceed 0.1% by weight in homogeneous materials. Where designed to be soldered at high temperatures, "RoHS" products are suitable for use in specified lead-free processes. TI may reference these types of products as "Pb-Free".
RoHS Exempt: TI defines "RoHS Exempt" to mean products that contain lead but are compliant with EU RoHS pursuant to a specific EU RoHS exemption.
Green: TI defines "Green" to mean the content of Chlorine (Cl) and Bromine (Br) based flame retardants meet JS709B low halogen requirements of <=1000ppm threshold. Antimony trioxide based flame retardants must also meet the <=1000ppm threshold requirement.

(3) MSL, Peak Temp. - The Moisture Sensitivity Level rating according to the JEDEC industry standard classifications, and peak solder temperature.

(4) There may be additional marking, which relates to the logo, the lot trace code information, or the environmental category on the device.

(5) Multiple Device Markings will be inside parentheses. Only one Device Marking contained in parentheses and separated by a "~" will appear on a device. If a line is indented then it is a continuation of the previous line and the two combined represent the entire Device Marking for that device.

(6) Lead finish/Ball material - Orderable Devices may have multiple material finish options. Finish options are separated by a vertical ruled line. Lead finish/Ball material values may wrap to two lines if the finish value exceeds the maximum column width.

Important Information and Disclaimer: The information provided on this page represents TI's knowledge and belief as of the date that it is provided. TI bases its knowledge and belief on information provided by third parties, and makes no representation or warranty as to the accuracy of such information. Efforts are underway to better integrate information from third parties. TI has taken and continues to take reasonable steps to provide representative and accurate information but may not have conducted destructive testing or chemical analysis on incoming materials and chemicals. TI and TI suppliers consider certain information to be proprietary, and thus CAS numbers and other limited information may not be available for release.

In no event shall TI's liability arising out of such information exceed the total purchase price of the TI part(s) at issue in this document sold by TI to Customer on an annual basis.

TUBE

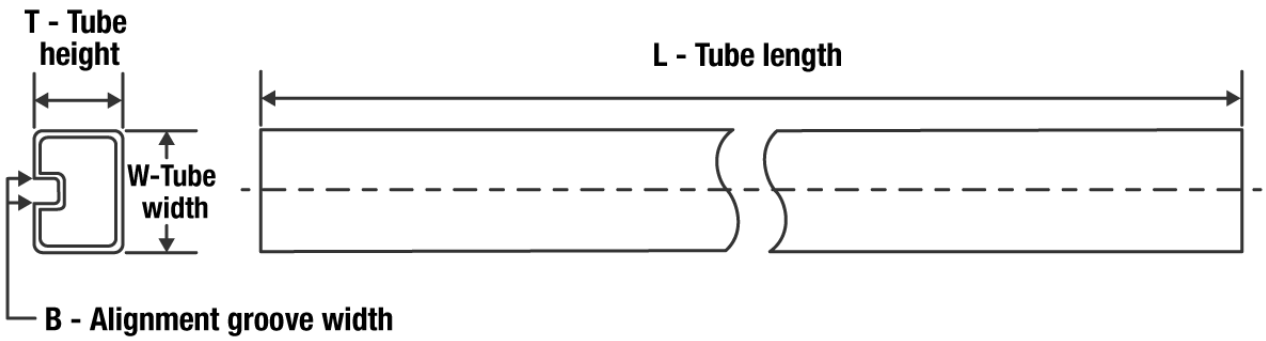

*All dimensions are nominal

Device	Package Name	Package Type	Pins	SPQ	L (mm)	W (mm)	T (µm)	B (mm)
SN74ACT7806-20DL	DL	SSOP	56	20	473.7	14.24	5110	7.87
SN74ACT7806-40DL	DL	SSOP	56	20	473.7	14.24	5110	7.87

DL (R–PDSO–G56) PLASTIC SMALL–OUTLINE PACKAGE

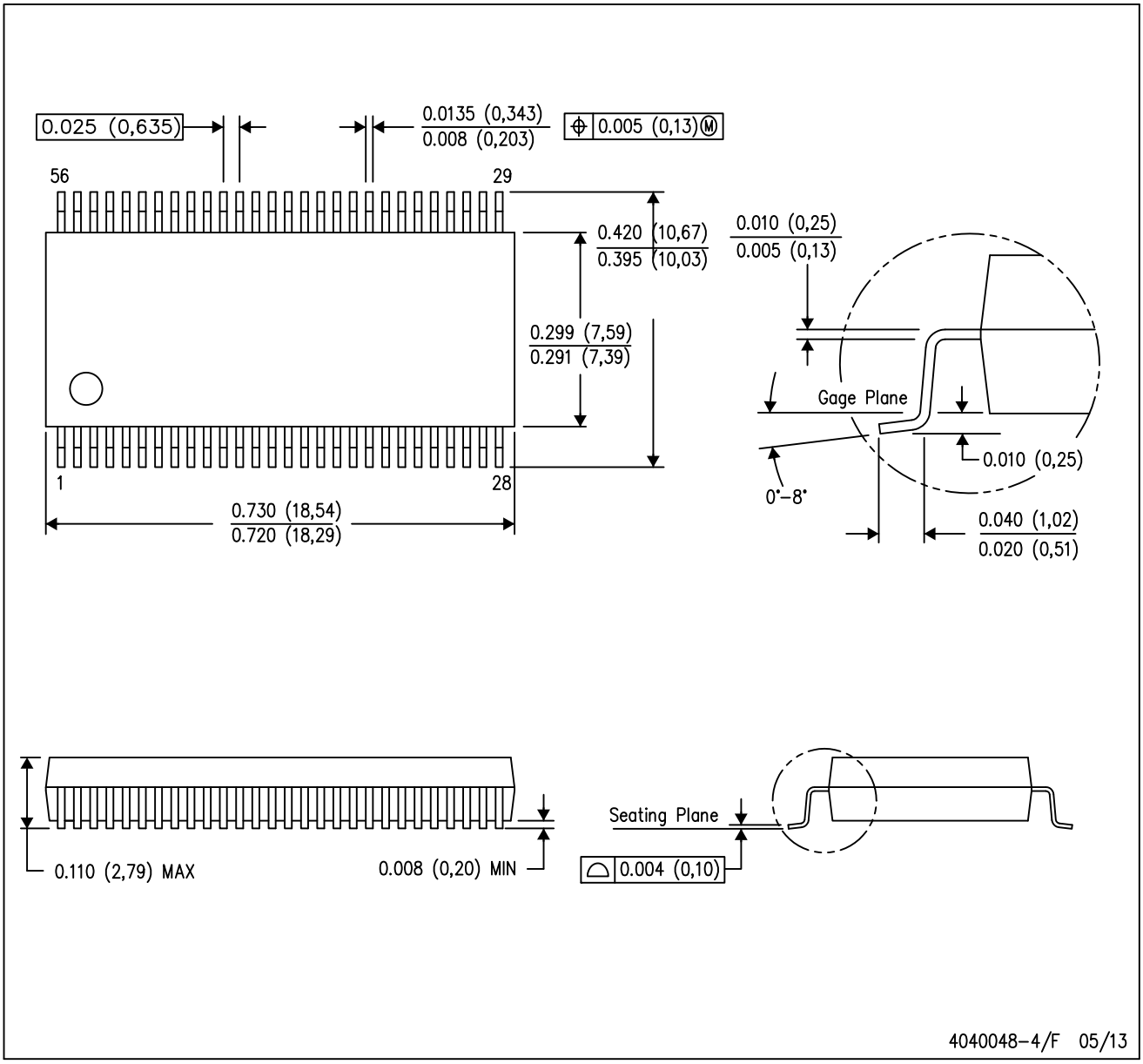

NOTES:
A. All linear dimensions are in inches (millimeters).
B. This drawing is subject to change without notice.
C. Body dimensions do not include mold flash or protrusion not to exceed 0.006 (0,15).
D. Falls within JEDEC MO–118

PowerPAD is a trademark of Texas Instruments.

IMPORTANT NOTICE AND DISCLAIMER

TI PROVIDES TECHNICAL AND RELIABILITY DATA (INCLUDING DATA SHEETS), DESIGN RESOURCES (INCLUDING REFERENCE DESIGNS), APPLICATION OR OTHER DESIGN ADVICE, WEB TOOLS, SAFETY INFORMATION, AND OTHER RESOURCES “AS IS” AND WITH ALL FAULTS, AND DISCLAIMS ALL WARRANTIES, EXPRESS AND IMPLIED, INCLUDING WITHOUT LIMITATION ANY IMPLIED WARRANTIES OF MERCHANTABILITY, FITNESS FOR A PARTICULAR PURPOSE OR NON-INFRINGEMENT OF THIRD PARTY INTELLECTUAL PROPERTY RIGHTS.

These resources are intended for skilled developers designing with TI products. You are solely responsible for (1) selecting the appropriate TI products for your application, (2) designing, validating and testing your application, and (3) ensuring your application meets applicable standards, and any other safety, security, regulatory or other requirements.

These resources are subject to change without notice. TI grants you permission to use these resources only for development of an application that uses the TI products described in the resource. Other reproduction and display of these resources is prohibited. No license is granted to any other TI intellectual property right or to any third party intellectual property right. TI disclaims responsibility for, and you will fully indemnify TI and its representatives against, any claims, damages, costs, losses, and liabilities arising out of your use of these resources.

TI’s products are provided subject to TI’s Terms of Sale or other applicable terms available either on ti.com or provided in conjunction with such TI products. TI’s provision of these resources does not expand or otherwise alter TI’s applicable warranties or warranty disclaimers for TI products.

TI objects to and rejects any additional or different terms you may have proposed.

Mailing Address: Texas Instruments, Post Office Box 655303, Dallas, Texas 75265
Copyright © 2022, Texas Instruments Incorporated