DRV5053-Q1 汽车类 模拟双极霍尔效应传感器

1 特性

- 线性输出霍尔传感器
- 符合汽车应用要求的 AEC-Q100 标准
  - 1 级：T_A = –40 至 125°C（Q，请见图 17）
  - 0 级：T_A = –40 至 150°C（E，请见图 17）
- 出色的温度稳定性
  - 温度范围内的灵敏度为 ±10%
- 高灵敏度选项：
  - –11mV/mT（OA，请见图 17）
  - –23mV/mT (PA)
  - –45mV/mT (RA)
  - –90mV/mT (VA)
  - +23mV/mT (CA)
  - +45mV/mT (EA)
- 支持宽电压范围
  - 2.7V 至 38V
  - 无需外部稳压器
- 放大的输出级
  - 2.3mA 灌电流，300µA 拉电流
- 输出电压：0.2V 至 1.8V
  - B = 0mT，OUT = 1V
- 快速上电：35µs
- 小型封装尺寸
  - 表面贴装 3 引脚小外形尺寸晶体管 (SOT)-23 (DBZ)
    - 2.92mm × 2.37mm
  - 插入式 3 引脚系统级封装 (SIP) (LPG)
    - 4.00mm × 3.15mm
- 保护特性
  - 反向电源保护（高达 -22V）
  - 支持高达 40V 抛负载
  - 输出短路保护
  - 输出电流限制
  - 电池输出短路保护

2 应用

- 流量计
- 对接调整
- 振动校正
- 减震器控制

3 说明

DRV5053-Q1 器件是一款斩波稳定霍尔 IC，能够在整个温度范围内提供具有出色灵敏度稳定性和集成保护特性的磁场感测解决方案。

0V 至 2V 模拟输出可对施加的磁感应强度做出线性响应，并且能够辨别磁场方向的极性。 反向极性保护高达 -22V 的宽工作电压范围（2.7V 至 38V）使得此器件适用于广泛的汽车和消费类应用。

针对反向电源情况、负载突降和输出短路或过流提供内部保护功能。

器件信息(1)

器件型号	封装	封装尺寸（标称值）
DRV5053-Q1	SOT-23 (3)	2.92mm × 2.37mm
	SIP (3)	4.00mm × 3.15mm

(1) 要了解所有可用封装，请见数据表末尾的可订购产品附录。

4 输出状态

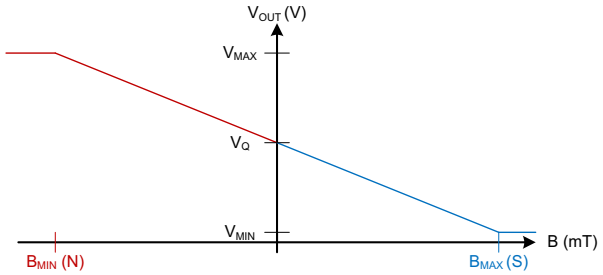

SOT-23

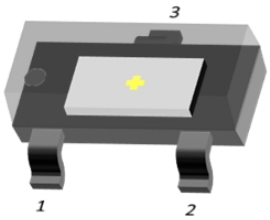

SIP

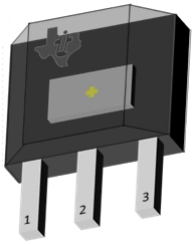

PRODUCTION DATA information is current as of publication date. Products conform to specifications per the terms of the Texas Instruments standard warranty. Production processing does not necessarily include testing of all parameters.

目录

1 特性 ... 1
2 应用 ... 1
3 说明 ... 1
4 输出状态 ... 1
5 修订历史记录 ... 2
6 **Pin Configuration and Functions** ... 3
7 **Specifications** ... 4
7.1 Absolute Maximum Ratings ... 4
7.2 ESD Ratings ... 4
7.3 Recommended Operating Conditions ... 4
7.4 Thermal Information ... 4
7.5 Electrical Characteristics ... 5
7.6 Switching Characteristics ... 5
7.7 Magnetic Characteristics ... 5
7.8 Typical Characteristics ... 7
8 **Detailed Description** ... 8
8.1 Overview ... 8
8.2 Functional Block Diagram ... 8
8.3 Feature Description ... 9
8.4 Device Functional Modes ... 11
9 **Application and Implementation** ... 12
9.1 Application Information ... 12
9.2 Typical Applications ... 12
10 **Power Supply Recommendations** ... 14
11 器件和文档支持 ... 15
11.1 器件支持 ... 15
11.2 商标 ... 16
11.3 静电放电警告 ... 16
11.4 术语表 ... 16
12 机械封装和可订购信息 ... 16

5 修订历史记录

日期	修订版本	注释
2014年12月	*	最初发布。

Copyright © 2014, Texas Instruments Incorporated

6 Pin Configuration and Functions

For additional configuration information, see *器件标记* and *机械封装和可订购信息*.

3-Pin SOT-23
DBZ Package
(Top View)

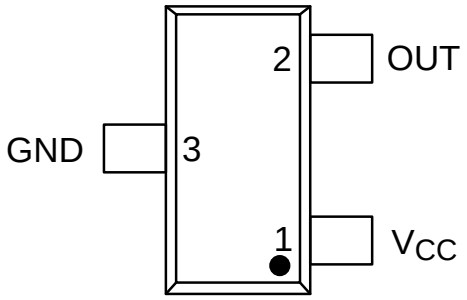

3-Pin SIP
LPG Package
(Top View)

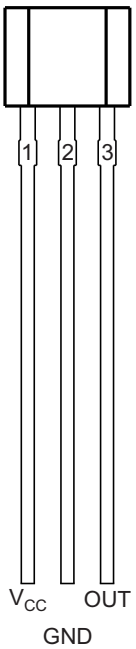

Pin Functions

PIN			TYPE	DESCRIPTION
NAME	DBZ	LPG		
GND	3	2	GND	Ground pin
V_{CC}	1	1	Power	2.7 to 38 V power supply. Bypass this pin to the GND pin with a 0.01-µF (minimum) ceramic capacitor rated for V_{CC}.
OUT	2	3	Output	Hall sensor analog output. 1 V output corresponds to B = 0 mT

Copyright © 2014, Texas Instruments Incorporated

7 Specifications

7.1 Absolute Maximum Ratings

over operating free-air temperature range (unless otherwise noted)[1]

		MIN	MAX	UNIT
Power supply voltage	V_{CC}	–22[2]	40	V
	Voltage ramp rate (V_{CC}), V_{CC} < 5 V	Unlimited		V/µs
	Voltage ramp rate (V_{CC}), V_{CC} > 5 V	0	2	
Output pin voltage	OUT	–0.5	2.5	V
Output pin reverse current during reverse supply condition	OUT	0	–20	mA
Operating junction temperature, T_J	Q, see 图 17	–40	150[3]	°C
	E, see 图 17	–40	175[4]	
T_{stg}	Storage temperature range	–65	150	°C

(1) Stresses beyond those listed under *Absolute Maximum Ratings* may cause permanent damage to the device. These are stress ratings only, which do not imply functional operation of the device at these or any other conditions beyond those indicated under *Recommended Operating Conditions*. Exposure to absolute-maximum-rated conditions for extended periods may affect device reliability.
(2) Ensured by design. Only tested to –20 V.
(3) Tested in production to T_A = 125°C.
(4) Tested in production to T_A = 150°C.

7.2 ESD Ratings

			VALUE	UNIT
$V_{(ESD)}$	Electrostatic discharge	Human body model (HBM), per ANSI/ESDA/JEDEC JS-001, all pins[1]	±2500	V
		Charged device model (CDM), per JEDEC specification JESD22-C101, all pins[2]	±500	

(1) JEDEC document JEP155 states that 500-V HBM allows safe manufacturing with a standard ESD control process.
(2) JEDEC document JEP157 states that 250-V CDM allows safe manufacturing with a standard ESD control process.

7.3 Recommended Operating Conditions

over operating free-air temperature range (unless otherwise noted)

			MIN	MAX	UNIT
V_{CC}	Power supply voltage		2.7	38	V
V_{OUT}	Output pin voltage (OUT)		0	2	V
I_{SOURCE}	Output pin current source (OUT)		0	300	µA
I_{SINK}	Output pin current sink (OUT)		0	2.3	mA
T_A	Operating ambient temperature	Q, see 图 17	–40	125	°C
		E, see 图 17	–40	150	

7.4 Thermal Information

THERMAL METRIC[1]		DRV5053-Q1		UNIT
		DBZ	LPG	
		3 PINS	3 PINS	
$R_{\theta JA}$	Junction-to-ambient thermal resistance	333.2	180	°C/W
$R_{\theta JC(top)}$	Junction-to-case (top) thermal resistance	99.9	98.6	
$R_{\theta JB}$	Junction-to-board thermal resistance	66.9	154.9	
ψ_{JT}	Junction-to-top characterization parameter	4.9	40	
ψ_{JB}	Junction-to-board characterization parameter	65.2	154.9	

(1) For more information about traditional and new thermal metrics, see the *IC Package Thermal Metrics* application report, SPRA953.

Copyright © 2014, Texas Instruments Incorporated

7.5 Electrical Characteristics

over operating free-air temperature range (unless otherwise noted)

PARAMETER		TEST CONDITIONS	MIN	TYP	MAX	UNIT
POWER SUPPLIES (V_{CC})						
V_{CC}	V_{CC} operating voltage		2.7		38	V
I_{CC}	Operating supply current	V_{CC} = 2.7 to 38 V, T_A = 25°C		2.7		mA
		V_{CC} = 2.7 to 38 V, T_A = $T_{A, MAX}$ (1)		3	3.6	
t_{on}	Power-on time			35	50	µs
PROTECTION CIRCUITS						
V_{CCR}	Reverse supply voltage		–22			V
$I_{OCP,SOURCE}$	Overcurrent protection level	Sourcing current		300		µA
$I_{OCP,SINK}$	Overcurrent protection level	Sinking current		2.3		mA

(1) $T_{A, MAX}$ is 125°C for Q Grade 1 devices and 150°C for E Grade 0 devices (see 图 17)

7.6 Switching Characteristics

over operating free-air temperature range (unless otherwise noted)

PARAMETER		TEST CONDITIONS	MIN	TYP	MAX	UNIT
ANALOG OUTPUT (OUT)						
t_d	Output delay time	T_A = 25°C		13	25	µs

7.7 Magnetic Characteristics

over operating free-air temperature range (unless otherwise noted)

PARAMETER		TEST CONDITIONS	MIN	TYP	MAX	UNIT (1)
V_Q	Quiescent output	B = 0 mT	0.9	1.02	1.15	V
f_{BW}	Bandwidth (2)		20			kHz
B_N	Input-referred noise (3)	C_{OUT} = 50 pF	0.40	0.58	0.79	mT_{pp}
Le	Linearity (4)	$–B_{SAT}$ < B < B_{SAT}		1%		
$V_{OUT\ MIN}$	Output saturation voltage (min)	B < $–B_{SAT}$			0.2	V
$V_{OUT\ MAX}$	Output saturation voltage (max)	B > B_{SAT}	1.8			V
DRV5053OA: –11 mV/mT						
S	Sensitivity	V_{CC} = 3.3 V	–17.5	–11	–5	mV/mT
V_N	Output-referred noise (3)	V_{CC} = 3.3 V; R_{OUT} = 10 kΩ; C_{OUT} = 50 pF		6		mV_{pp}
B_{SAT}	Input saturation field	V_{CC} = 3.3 V		73		mT
DRV5053PA: –23 mV/mT						
S	Sensitivity	V_{CC} = 3.3 V	–35	–23	–10	mV/mT
V_N	Output-referred noise (3)	V_{CC} = 3.3 V; R_{OUT} = 10 kΩ; C_{OUT} = 50 pF		13		mV_{pp}
B_{SAT}	Input saturation field	V_{CC} = 3.3 V		35		mT

(1) 1 mT = 10 Gauss
(2) Bandwidth describes the fastest changing magnetic field that can be detected and translated to the output.
(3) Not tested in production; limits are based on characterization data.
(4) Linearity describes the change in sensitivity across the B-range. The sensitivity near B_{SAT} is typically within 1% of the sensitivity near B = 0.

Copyright © 2014, Texas Instruments Incorporated

Magnetic Characteristics (continued)

over operating free-air temperature range (unless otherwise noted)

PARAMETER		TEST CONDITIONS	MIN	TYP	MAX	UNIT[1]
DRV5053RA: –45 mV/mT						
S	Sensitivity	V_{CC} = 3.3 V	–70	–45	–20	mV/mT
V_N	Output-referred noise[3]	V_{CC} = 3.3 V; R_{OUT} = 10 kΩ; C_{OUT} = 50 pF		26		mV_{pp}
B_{SAT}	Input saturation field	V_{CC} = 3.3 V		18		mT
DRV5053VA: –90 mV/mT						
S	Sensitivity	V_{CC} = 3.3 V	–140	–90	–45	mV/mT
V_N	Output-referred noise[3]	V_{CC} = 3.3 V; R_{OUT} = 10 kΩ; C_{OUT} = 50 pF		52		mV_{pp}
B_{SAT}	Input saturation field	V_{CC} = 3.3 V		9		mT
DRV5053CA: 23 mV/mT						
S	Sensitivity	V_{CC} = 3.3 V	10	23	35	mV/mT
V_N	Output-referred noise[3]	V_{CC} = 3.3 V; R_{OUT} = 10 kΩ; C_{OUT} = 50 pF		13		mV_{pp}
B_{SAT}	Input saturation field	V_{CC} = 3.3 V		35		mT
DRV5053EA: 45 mV/mT						
S	Sensitivity	V_{CC} = 3.3 V	20	45	70	mV/mT
V_N	Output-referred noise[3]	V_{CC} = 3.3 V; R_{OUT} = 10 kΩ; C_{OUT} = 50 pF		26		mV_{pp}
B_{SAT}	Input saturation field	V_{CC} = 3.3 V		18		mT

Copyright © 2014, Texas Instruments Incorporated

7.8 Typical Characteristics

T_A > 125°C data is valid for Grade 0 devices only (E, see 图 17)

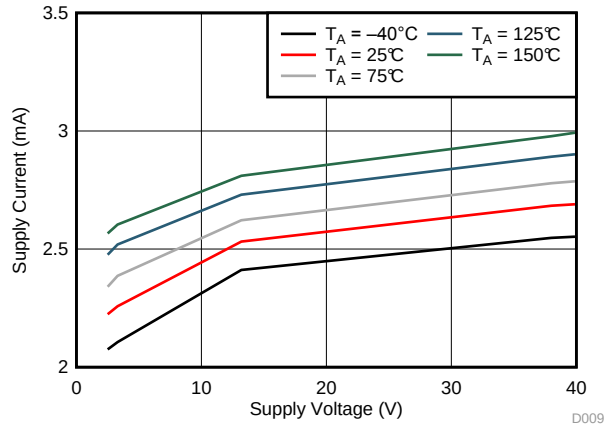

Figure 1. I_{CC} vs V_{CC}

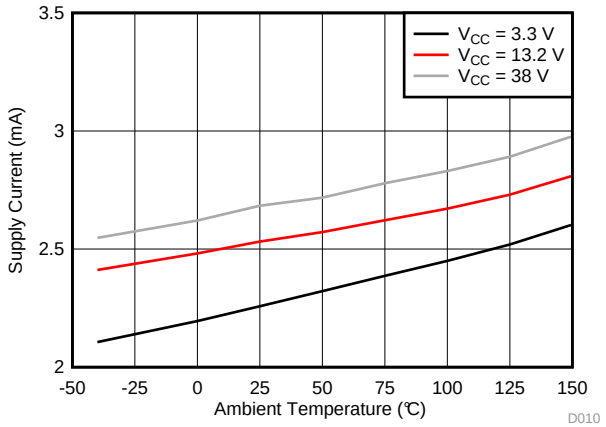

Figure 2. I_{CC} vs Temperature

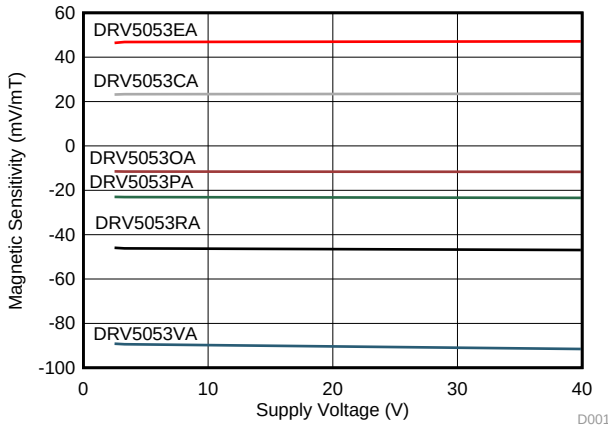

T_A = 25°C

Figure 3. Sensitivity vs V_{CC}

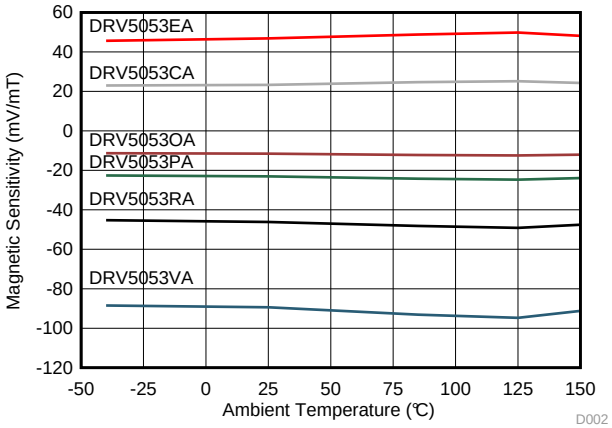

V_{CC} = 3.3 V

Figure 4. Sensitivity vs Temperature

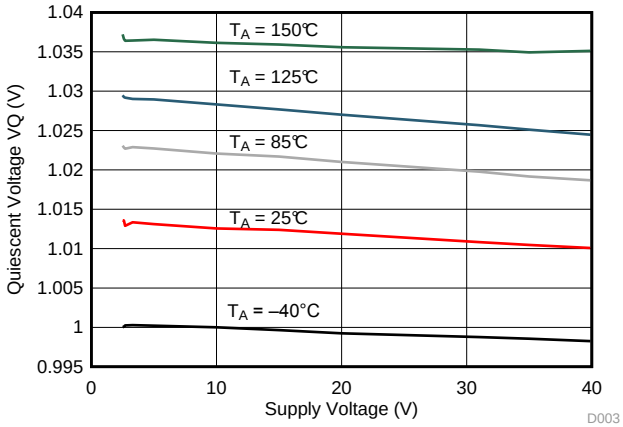

T_A = 25°C

Figure 5. DRV5053-Q1AD, V_Q vs V_{CC}

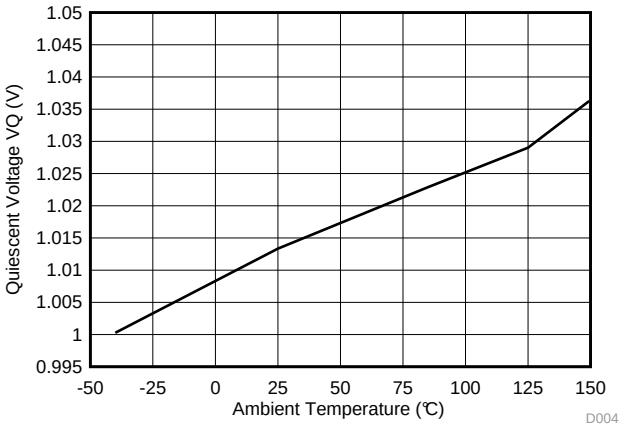

V_{CC} = 3.3 V

Figure 6. DRV5053-Q1AD, B_N vs Temperature

8 Detailed Description

8.1 Overview

The DRV5053-Q1 device is a chopper-stabilized hall sensor with an analog output for magnetic sensing applications. The DRV5053-Q1 device can be powered with a supply voltage between 2.7 and 38 V, and will survive –22 V reverse battery conditions continuously. Note that the DRV5053-Q1 device will not be operating when approximately –22 to 2.4 V is applied to V_{CC} (with respect to GND). In addition, the device can withstand supply voltages up to 40 V for transient durations.

The output voltage is dependent on the magnetic field perpendicular to the package. The absence of a magnetic field will result in OUT = 1 V. A magnetic field will cause the output voltage to change linearly with the magnetic field.

The field polarity is defined as follows: a south pole near the marked side of the package is a positive magnetic field. A north pole near the marked side of the package is a negative magnetic field.

For devices with a negative sensitivity (that is, DRV5053-Q1RA: –40 mV/mT), a south pole will cause the output voltage to drop below 1 V, and a north pole will cause the output to rise above 1 V.

For devices with a positive sensitivity (that is, DRV5053-Q1EA: +40 mV/mT), a south pole will cause the output voltage to rise above 1 V, and a north pole will cause the output to drop below 1 V.

8.2 Functional Block Diagram

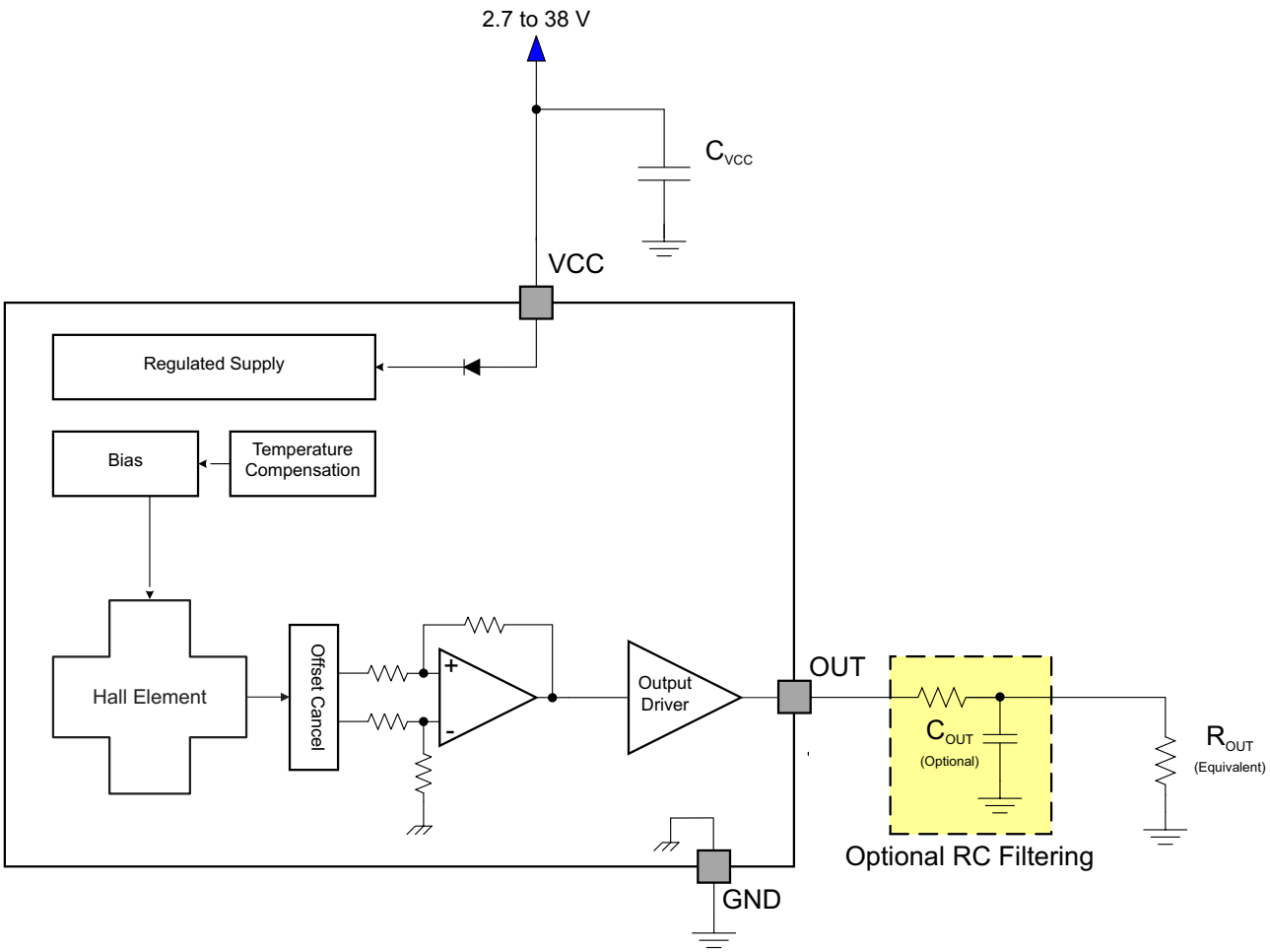

Copyright © 2014, Texas Instruments Incorporated

8.3 Feature Description

8.3.1 Field Direction Definition

A positive magnetic field is defined as a south pole near the marked side of the package as shown in Figure 7.

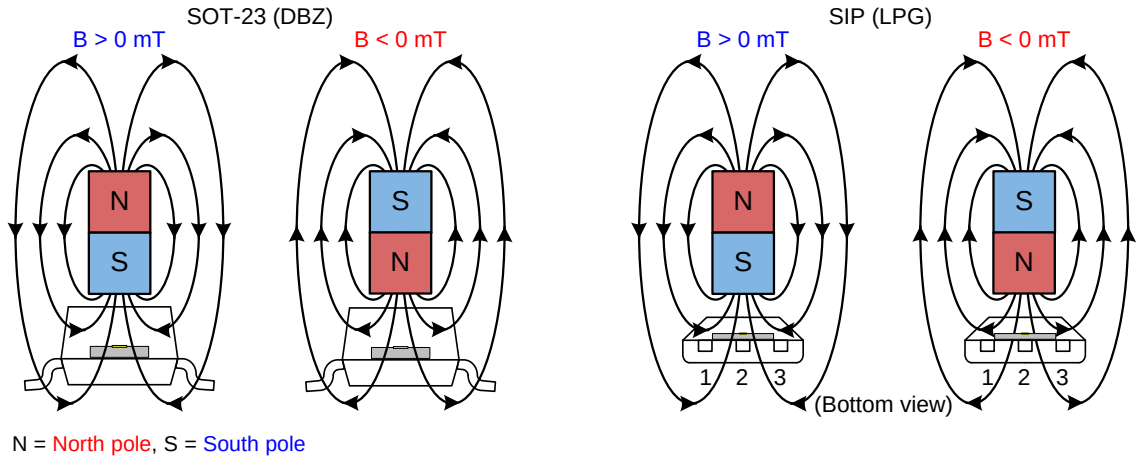

Figure 7. Field Direction Definition

8.3.2 Device Output

The DRV5053-Q1 device output is defined below for negative sensitivity (that is, –45 mV/mT, RA) and positive sensitivity (that is, +45 mV/mT, EA):

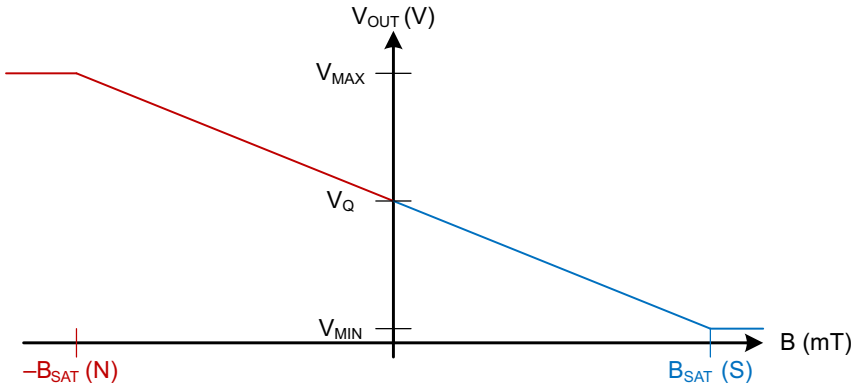

Figure 8. DRV5053-Q1 – Negative Sensitivity

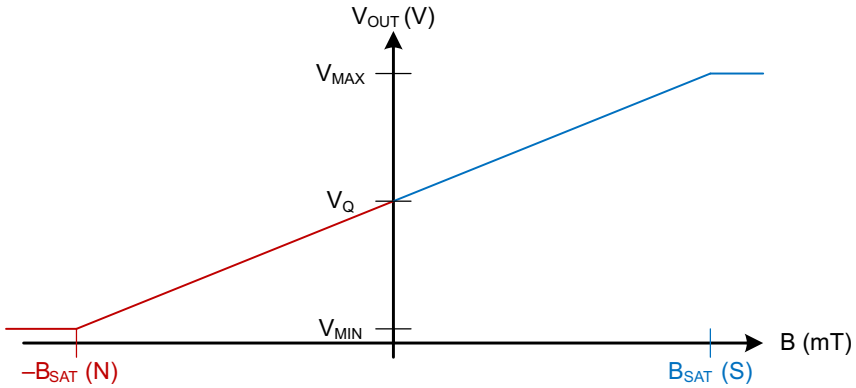

Figure 9. DRV5053-Q1 – Positive Sensitivity

Copyright © 2014, Texas Instruments Incorporated

Feature Description (continued)

8.3.3 Power-On Time

After applying V_{CC} to the DRV5053-Q1 device, t_{on} must elapse before OUT is valid. Figure 10 shows Case 1 and Figure 11 shows case 2; the output is defined assuming a negative sensitivity device and a constant magnetic field $-B_{SAT} < B < B_{SAT}$.

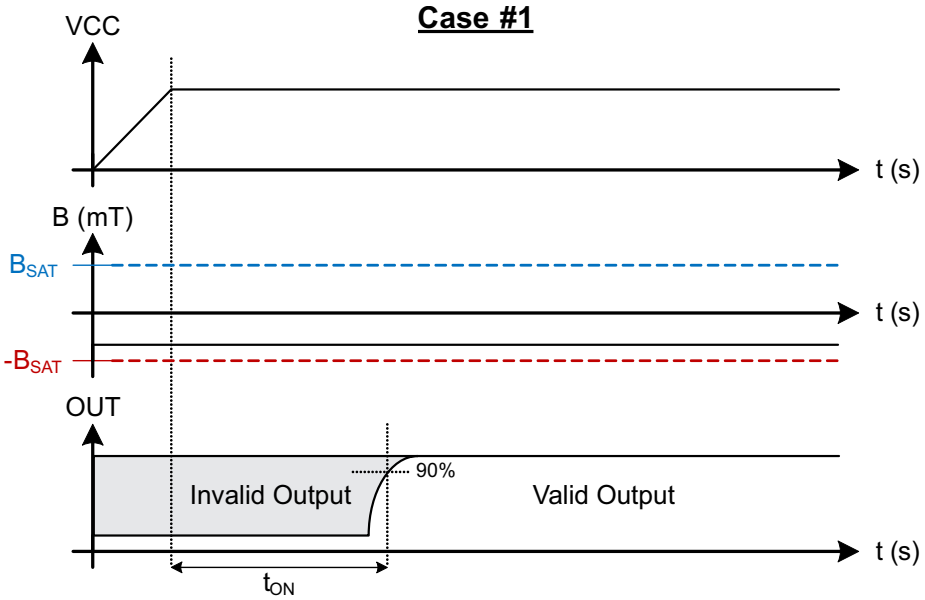

Figure 10. Case 1: Power On When B < 0, North

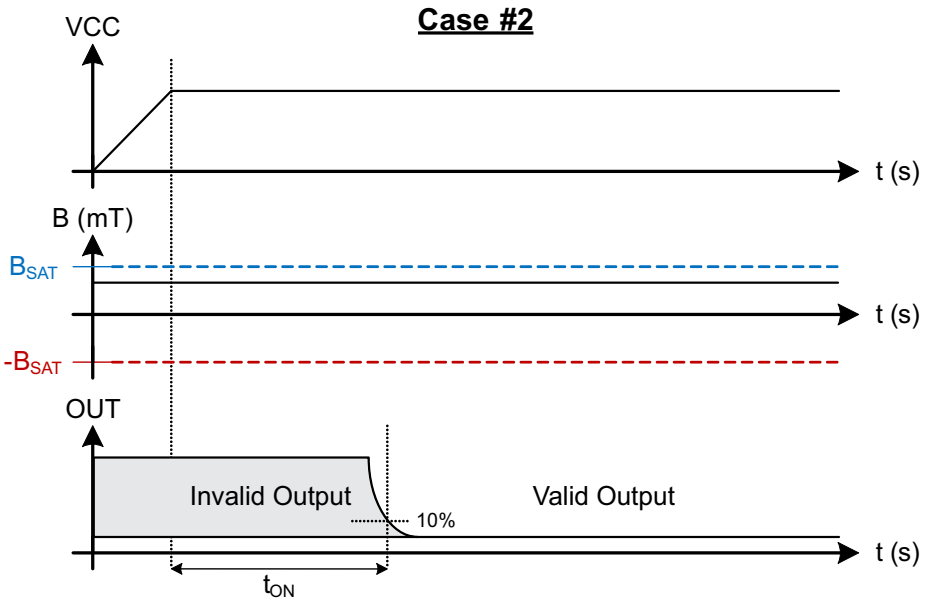

Figure 11. Case 2: Power On When B > 0, South

Copyright © 2014, Texas Instruments Incorporated

Feature Description (continued)

8.3.4 Output Stage

The DRV5053-Q1 output stage is capable of up to 300 µA of current source or 2.3 mA sink.

For proper operation, ensure that equivalent output load ROUT > 10 kΩ. In addition, ensure that the load capacitance C_{OUT} < 10 nF.

8.3.5 Protection Circuits

An analog current limit circuit limits the current through the output driver. The driver current will be clamped to I_{OCP}

8.3.5.1 Overcurrent Protection (OCP)

An analog current-limit circuit limits the current through the FET. The driver current is clamped to I_{OCP}. During this clamping, the $r_{DS(on)}$ of the output FET is increased from the nominal value.

8.3.5.2 Load Dump Protection

The DRV5053-Q1 device operates at DC V_{CC} conditions up to 38 V nominally, and can additionally withstand V_{CC} = 40 V. No current-limiting series resistor is required for this protection.

8.3.5.3 Reverse Supply Protection

The DRV5053-Q1 device is protected in the event that the V_{CC} pin and the GND pin are reversed (up to –22 V).

NOTE

In a reverse supply condition, the OUT pin reverse-current must not exceed the ratings specified in the *Absolute Maximum Ratings*.

Table 1.

FAULT	CONDITION	DEVICE	DESCRIPTION	RECOVERY
FET overload (OCP)	$I_{SINK} \geq I_{OCP}$	Operating	Output current is clamped to I_{OCP}	$I_O < I_{OCP}$
Load Dump	38 V < V_{CC} < 40 V	Operating	Device will operate for a transient duration	$V_{CC} \leq$ 38 V
Reverse Supply	–22 V < V_{CC} < 0 V	Disabled	Device will survive this condition	$V_{CC} \geq$ 2.7 V

8.4 Device Functional Modes

The DRV5053-Q1 device is active only when V_{CC} is between 2.7 and 38 V.

When a reverse supply condition exists, the device is inactive.

Copyright © 2014, Texas Instruments Incorporated

9 Application and Implementation

NOTE

Information in the following applications sections is not part of the TI component specification, and TI does not warrant its accuracy or completeness. TI's customers are responsible for determining suitability of components for their purposes. Customers should validate and test their design implementation to confirm system functionality.

9.1 Application Information

The DRV5053-Q1 device is used in magnetic-field sensing applications.

9.2 Typical Applications

9.2.1 Typical Application With No Filter

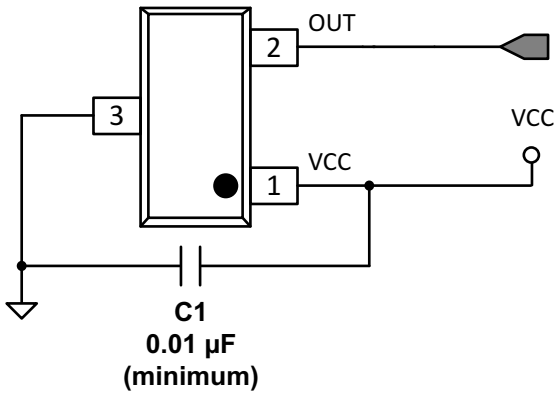

Figure 12. Typical Application Schematic – No Filter

9.2.1.1 Design Requirements

For this design example, use the parameters listed in Table 2 as the input parameters.

Table 2. Design Parameters

DESIGN PARAMETER	REFERENCE	EXAMPLE VALUE
System bandwidth	f_{BW}	15 kHz

9.2.1.2 Detailed Design Procedure

The DRV5053-Q1 has internal filtering that limits the bandwidth to at least 20 kHz. For this application no external components are required other than the C1 bypass capacitor, which is 0.01 µF minimum. If the analog output OUT is tied to a microcontroller ADC input, the equivalent load must be R > 10 kΩ and C < 10 nF.

Table 3. External Components

COMPONENT	PIN 1	PIN 2	RECOMMENDED
C1	V_{CC}	GND	A 0.01-µF (minimum) ceramic capacitor rated for V_{CC}

Copyright © 2014, Texas Instruments Incorporated

9.2.1.3 Application Curve

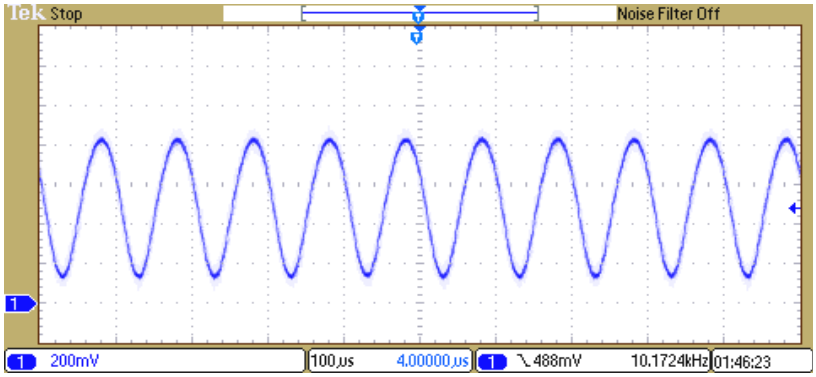

Figure 13. 10-kHz Switching Magnetic Field

9.2.2 Filtered Typical Application

For lower noise on the analog output OUT, additional RC filtering can be added to further reduce the bandwidth.

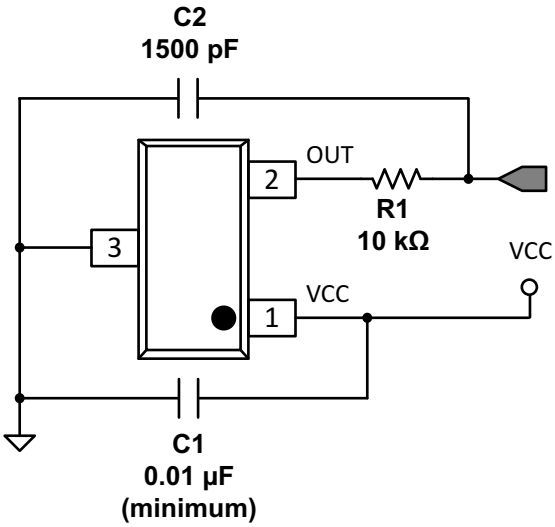

Figure 14. Filtered Typical Application Schematic

9.2.2.1 Design Requirements

For this design example, use the parameters listed in Table 4 as the input parameters.

Table 4. Design Parameters

DESIGN PARAMETER	REFERENCE	EXAMPLE VALUE
System bandwidth	f_{BW}	5 kHz

9.2.2.2 Detailed Design Procedure

In this example we will add an external RC filter in order to reduce the output bandwidth.

In order to preserve the signal at the frequencies of interest, we will conservatively select a low-pass filter bandwidth (–3-dB point) at twice the system bandwidth (10 kHz).

$$10\ \text{kHz} < \frac{1}{2\pi \times R_1 \times C_2} \tag{1}$$

If we guess R1 = 10 kΩ, then C2 < 1590 pF. So we select C2 = 1500 pF.

9.2.2.3 Application Curves

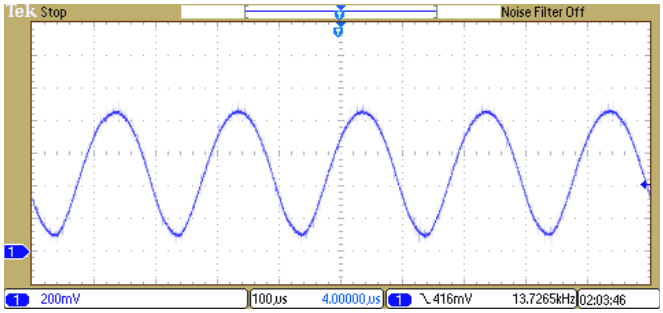

Figure 15. 5-kHz Switching Magnetic Field

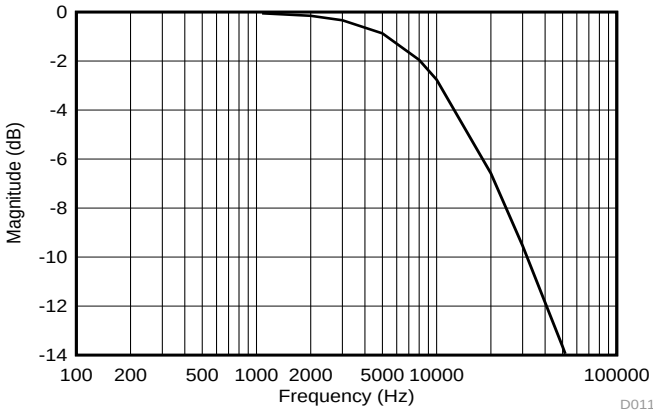

R1 = 10-kΩ pullup C2 = 680 pF

Figure 16. Low-Pass Filtering

10 Power Supply Recommendations

The DRV5053-Q1 device is designed to operate from an input voltage supply (VM) range between 2.7 and 38 V. A 0.01-µF (minimum) ceramic capacitor rated for V_{CC} must be placed as close to the DRV5053-Q1 device as possible.

版权 © 2014, Texas Instruments Incorporated

11 器件和文档支持

11.1 器件支持

11.1.1 器件命名规则

图 17 显示了读取 DRV5053-Q1 器件完整器件名称的图例。

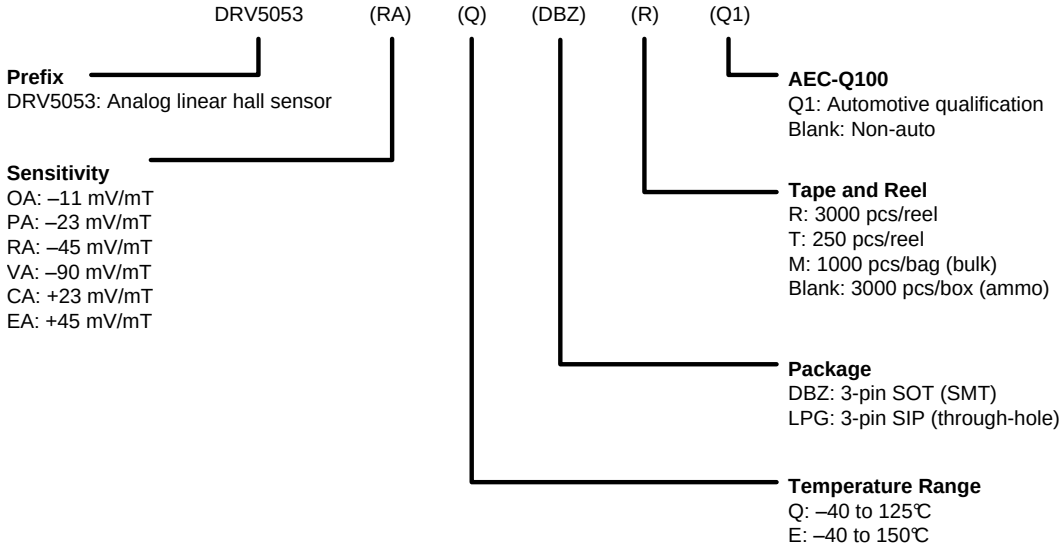

图 **17.** 器件命名规则

11.1.2 器件标记

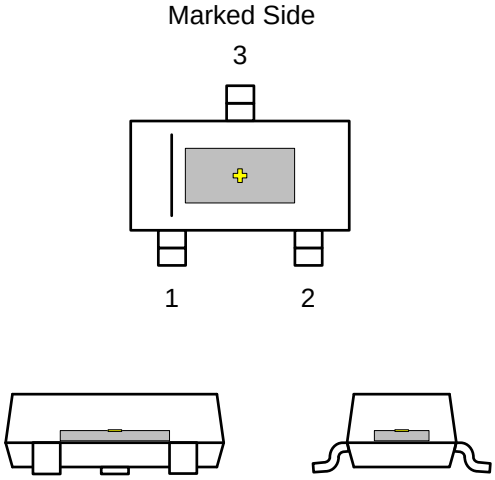

图 **18. SOT-23 (DBZ)** 封装

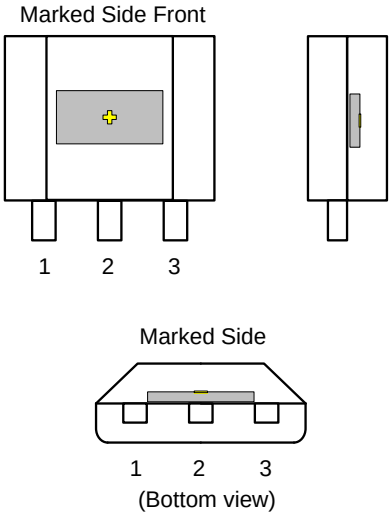

图 **19. SIP (LPG)** 封装

✚ 表示霍尔效应传感器（未按比例显示）。 霍尔元件置于封装中央位置，容差为 ±100µm。 在 DBZ 封装中，霍尔元件与封装底部的距离为 0.7mm ± 50µm；在 LPG 封装中，霍尔元件与封装底部的距离为 0.987mm ± 50µm。

11.2 商标

All trademarks are the property of their respective owners.

11.3 静电放电警告

这些装置包含有限的内置 ESD 保护。 存储或装卸时，应将导线一起截短或将装置放置于导电泡棉中，以防止 MOS 门极遭受静电损伤。

11.4 术语表

SLYZ022 — *TI 术语表*。

这份术语表列出并解释术语、首字母缩略词和定义。

12 机械封装和可订购信息

以下页中包括机械封装和可订购信息。 这些信息是针对指定器件可提供的最新数据。 这些数据会在无通知且不对本文档进行修订的情况下发生改变。 欲获得该数据表的浏览器版本，请查阅左侧的导航栏。

版权 © 2014, Texas Instruments Incorporated

重要声明

德州仪器(TI) 及其下属子公司有权根据 JESD46 最新标准, 对所提供的产品和服务进行更正、修改、增强、改进或其它更改， 并有权根据 JESD48 最新标准中止提供任何产品和服务。客户在下订单前应获取最新的相关信息, 并验证这些信息是否完整且是最新的。所有产品的销售都遵循在订单确认时所提供的TI 销售条款与条件。

TI 保证其所销售的组件的性能符合产品销售时 TI 半导体产品销售条件与条款的适用规范。仅在 TI 保证的范围内，且 TI 认为 有必要时才会使用测试或其它质量控制技术。除非适用法律做出了硬性规定，否则没有必要对每种组件的所有参数进行测试。

TI 对应用帮助或客户产品设计不承担任何义务。客户应对其使用 TI 组件的产品和应用自行负责。为尽量减小与客户产品和应 用相关的风险，客户应提供充分的设计与操作安全措施。

TI 不对任何 TI 专利权、版权、屏蔽作品权或其它与使用了 TI 组件或服务的组合设备、机器或流程相关的 TI 知识产权中授予 的直接或隐含权限作出任何保证或解释。TI 所发布的与第三方产品或服务有关的信息，不能构成从 TI 获得使用这些产品或服 务的许可、授权、或认可。使用此类信息可能需要获得第三方的专利权或其它知识产权方面的许可，或是 TI 的专利权或其它 知识产权方面的许可。

对于 TI 的产品手册或数据表中 TI 信息的重要部分，仅在没有对内容进行任何篡改且带有相关授权、条件、限制和声明的情况 下才允许进行复制。TI 对此类篡改过的文件不承担任何责任或义务。复制第三方的信息可能需要服从额外的限制条件。

在转售 TI 组件或服务时，如果对该组件或服务参数的陈述与 TI 标明的参数相比存在差异或虚假成分，则会失去相关 TI 组件 或服务的所有明示或暗示授权，且这是不正当的、欺诈性商业行为。TI 对任何此类虚假陈述均不承担任何责任或义务。

客户认可并同意，尽管任何应用相关信息或支持仍可能由 TI 提供，但他们将独力负责满足与其产品及在其应用中使用 TI 产品 相关的所有法律、法规和安全相关要求。客户声明并同意，他们具备制定与实施安全措施所需的全部专业技术和知识，可预见 故障的危险后果、监测故障及其后果、降低有可能造成人身伤害的故障的发生机率并采取适当的补救措施。客户将全额赔偿因 在此类安全关键应用中使用任何 TI 组件而对 TI 及其代理造成的任何损失。

在某些场合中，为了推进安全相关应用有可能对 TI 组件进行特别的促销。TI 的目标是利用此类组件帮助客户设计和创立其特 有的可满足适用的功能安全性标准和要求的终端产品解决方案。尽管如此，此类组件仍然服从这些条款。

TI 组件未获得用于 FDA Class III（或类似的生命攸关医疗设备）的授权许可，除非各方授权官员已经达成了专门管控此类使 用的特别协议。

只有那些 TI 特别注明属于军用等级或“增强型塑料”的 TI 组件才是设计或专门用于军事/航空应用或环境的。购买者认可并同 意，对并非指定面向军事或航空航天用途的 TI 组件进行军事或航空航天方面的应用，其风险由客户单独承担，并且由客户独 力负责满足与此类使用相关的所有法律和法规要求。

TI 已明确指定符合 ISO/TS16949 要求的产品，这些产品主要用于汽车。在任何情况下，因使用非指定产品而无法达到 ISO/TS16949 要求，TI不承担任何责任。

	产品		应用
数字音频	www.ti.com.cn/audio	通信与电信	www.ti.com.cn/telecom
放大器和线性器件	www.ti.com.cn/amplifiers	计算机及周边	www.ti.com.cn/computer
数据转换器	www.ti.com.cn/dataconverters	消费电子	www.ti.com/consumer-apps
DLP® 产品	www.dlp.com	能源	www.ti.com/energy
DSP - 数字信号处理器	www.ti.com.cn/dsp	工业应用	www.ti.com.cn/industrial
时钟和计时器	www.ti.com.cn/clockandtimers	医疗电子	www.ti.com.cn/medical
接口	www.ti.com.cn/interface	安防应用	www.ti.com.cn/security
逻辑	www.ti.com.cn/logic	汽车电子	www.ti.com.cn/automotive
电源管理	www.ti.com.cn/power	视频和影像	www.ti.com.cn/video
微控制器 (MCU)	www.ti.com.cn/microcontrollers		
RFID 系统	www.ti.com.cn/rfidsys		
OMAP应用处理器	www.ti.com/omap		
无线连通性	www.ti.com.cn/wirelessconnectivity	德州仪器在线技术支持社区	www.deyisupport.com

邮寄地址： 上海市浦东新区世纪大道1568 号，中建大厦32 楼邮政编码： 200122
Copyright © 2015, 德州仪器半导体技术（上海）有限公司

PACKAGING INFORMATION

Orderable Device	Status (1)	Package Type	Package Drawing	Pins	Package Qty	Eco Plan (2)	Lead finish/ Ball material (6)	MSL Peak Temp (3)	Op Temp (°C)	Device Marking (4/5)	Samples
DRV5053CAEDBZRQ1	ACTIVE	SOT-23	DBZ	3	3000	RoHS & Green	NIPDAUAG	Level-1-260C-UNLIM	-40 to 150	+AJCA	Samples
DRV5053CAEDBZTQ1	ACTIVE	SOT-23	DBZ	3	250	RoHS & Green	NIPDAUAG	Level-1-260C-UNLIM	-40 to 150	+AJCA	Samples
DRV5053CAELPGMQ1	ACTIVE	TO-92	LPG	3	3000	RoHS & Green	SN	N / A for Pkg Type	-40 to 150	+AJCA	Samples
DRV5053CAELPGQ1	ACTIVE	TO-92	LPG	3	1000	RoHS & Green	SN	N / A for Pkg Type	-40 to 150	+AJCA	Samples
DRV5053CAQDBZRQ1	ACTIVE	SOT-23	DBZ	3	3000	RoHS & Green	NIPDAUAG	Level-1-260C-UNLIM	-40 to 125	+AKCA	Samples
DRV5053CAQDBZTQ1	ACTIVE	SOT-23	DBZ	3	250	RoHS & Green	NIPDAUAG	Level-1-260C-UNLIM	-40 to 125	+AKCA	Samples
DRV5053CAQLPGMQ1	ACTIVE	TO-92	LPG	3	3000	RoHS & Green	SN	N / A for Pkg Type	-40 to 125	+AKCA	Samples
DRV5053CAQLPGQ1	ACTIVE	TO-92	LPG	3	1000	RoHS & Green	SN	N / A for Pkg Type	-40 to 125	+AKCA	Samples
DRV5053EAEDBZRQ1	ACTIVE	SOT-23	DBZ	3	3000	RoHS & Green	NIPDAUAG	Level-1-260C-UNLIM	-40 to 150	+AJEA	Samples
DRV5053EAEDBZTQ1	ACTIVE	SOT-23	DBZ	3	250	RoHS & Green	NIPDAUAG	Level-1-260C-UNLIM	-40 to 150	+AJEA	Samples
DRV5053EAELPGMQ1	ACTIVE	TO-92	LPG	3	3000	RoHS & Green	SN	N / A for Pkg Type	-40 to 150	+AJEA	Samples
DRV5053EAELPGQ1	ACTIVE	TO-92	LPG	3	1000	RoHS & Green	SN	N / A for Pkg Type	-40 to 150	+AJEA	Samples
DRV5053EAQDBZRQ1	ACTIVE	SOT-23	DBZ	3	3000	RoHS & Green	NIPDAUAG	Level-1-260C-UNLIM	-40 to 150	+AKEA	Samples
DRV5053EAQDBZTQ1	ACTIVE	SOT-23	DBZ	3	250	RoHS & Green	NIPDAUAG	Level-1-260C-UNLIM	-40 to 150	+AKEA	Samples
DRV5053EAQLPGMQ1	ACTIVE	TO-92	LPG	3	3000	RoHS & Green	SN	N / A for Pkg Type	-40 to 150	+AKEA	Samples
DRV5053EAQLPGQ1	ACTIVE	TO-92	LPG	3	1000	RoHS & Green	SN	N / A for Pkg Type	-40 to 125	+AKEA	Samples
DRV5053OAEDBZRQ1	ACTIVE	SOT-23	DBZ	3	3000	RoHS & Green	NIPDAUAG	Level-1-260C-UNLIM	-40 to 150	+AJOA	Samples
DRV5053OAEDBZTQ1	ACTIVE	SOT-23	DBZ	3	250	RoHS & Green	NIPDAUAG	Level-1-260C-UNLIM	-40 to 150	+AJOA	Samples
DRV5053OAELPGMQ1	ACTIVE	TO-92	LPG	3	3000	RoHS & Green	SN	N / A for Pkg Type	-40 to 150	+AJOA	Samples
DRV5053OAELPGQ1	ACTIVE	TO-92	LPG	3	1000	RoHS & Green	SN	N / A for Pkg Type	-40 to 150	+AJOA	Samples

Orderable Device	Status (1)	Package Type	Package Drawing	Pins	Package Qty	Eco Plan (2)	Lead finish/ Ball material (6)	MSL Peak Temp (3)	Op Temp (°C)	Device Marking (4/5)	Samples
DRV5053OAQDBZRQ1	ACTIVE	SOT-23	DBZ	3	3000	RoHS & Green	NIPDAUAG	Level-1-260C-UNLIM	-40 to 125	+AKOA	Samples
DRV5053OAQDBZTQ1	ACTIVE	SOT-23	DBZ	3	250	RoHS & Green	NIPDAUAG	Level-1-260C-UNLIM	-40 to 125	+AKOA	Samples
DRV5053OAQLPGMQ1	ACTIVE	TO-92	LPG	3	3000	RoHS & Green	SN	N / A for Pkg Type	-40 to 125	+AKOA	Samples
DRV5053OAQLPGQ1	ACTIVE	TO-92	LPG	3	1000	RoHS & Green	SN	N / A for Pkg Type	-40 to 125	+AKOA	Samples
DRV5053PAEDBZRQ1	ACTIVE	SOT-23	DBZ	3	3000	RoHS & Green	NIPDAUAG	Level-1-260C-UNLIM	-40 to 150	+AJPA	Samples
DRV5053PAEDBZTQ1	ACTIVE	SOT-23	DBZ	3	250	RoHS & Green	NIPDAUAG	Level-1-260C-UNLIM	-40 to 150	+AJPA	Samples
DRV5053PAELPGMQ1	ACTIVE	TO-92	LPG	3	3000	RoHS & Green	SN	N / A for Pkg Type	-40 to 150	+AJPA	Samples
DRV5053PAELPGQ1	ACTIVE	TO-92	LPG	3	1000	RoHS & Green	SN	N / A for Pkg Type	-40 to 150	+AJPA	Samples
DRV5053PAQDBZRQ1	ACTIVE	SOT-23	DBZ	3	3000	RoHS & Green	NIPDAUAG	Level-1-260C-UNLIM	-40 to 125	+AKPA	Samples
DRV5053PAQDBZTQ1	ACTIVE	SOT-23	DBZ	3	250	RoHS & Green	NIPDAUAG	Level-1-260C-UNLIM	-40 to 125	+AKPA	Samples
DRV5053PAQLPGMQ1	ACTIVE	TO-92	LPG	3	3000	RoHS & Green	SN	N / A for Pkg Type	-40 to 125	+AKPA	Samples
DRV5053PAQLPGQ1	ACTIVE	TO-92	LPG	3	1000	RoHS & Green	SN	N / A for Pkg Type	-40 to 125	+AKPA	Samples
DRV5053RAEDBZRQ1	ACTIVE	SOT-23	DBZ	3	3000	RoHS & Green	NIPDAUAG	Level-1-260C-UNLIM	-40 to 150	+AJRA	Samples
DRV5053RAEDBZTQ1	ACTIVE	SOT-23	DBZ	3	250	RoHS & Green	NIPDAUAG	Level-1-260C-UNLIM	-40 to 150	+AJRA	Samples
DRV5053RAELPGMQ1	ACTIVE	TO-92	LPG	3	3000	RoHS & Green	SN	N / A for Pkg Type	-40 to 150	+AJRA	Samples
DRV5053RAELPGQ1	ACTIVE	TO-92	LPG	3	1000	RoHS & Green	SN	N / A for Pkg Type	-40 to 150	+AJRA	Samples
DRV5053RAQDBZRQ1	ACTIVE	SOT-23	DBZ	3	3000	RoHS & Green	NIPDAUAG	Level-1-260C-UNLIM	-40 to 125	+AKRA	Samples
DRV5053RAQDBZTQ1	ACTIVE	SOT-23	DBZ	3	250	RoHS & Green	NIPDAUAG	Level-1-260C-UNLIM	-40 to 125	+AKRA	Samples
DRV5053RAQLPGMQ1	ACTIVE	TO-92	LPG	3	3000	RoHS & Green	SN	N / A for Pkg Type	-40 to 125	+AKRA	Samples
DRV5053RAQLPGQ1	ACTIVE	TO-92	LPG	3	1000	RoHS & Green	SN	N / A for Pkg Type		+AKRA	Samples
DRV5053VAEDBZRQ1	ACTIVE	SOT-23	DBZ	3	3000	RoHS & Green	NIPDAUAG	Level-1-260C-UNLIM	-40 to 150	+AJVA	Samples

Orderable Device	Status (1)	Package Type	Package Drawing	Pins	Package Qty	Eco Plan (2)	Lead finish/ Ball material (6)	MSL Peak Temp (3)	Op Temp (°C)	Device Marking (4/5)	Samples
DRV5053VAEDBZTQ1	ACTIVE	SOT-23	DBZ	3	250	RoHS & Green	NIPDAUAG	Level-1-260C-UNLIM	-40 to 150	+AJVA	Samples
DRV5053VAELPGMQ1	ACTIVE	TO-92	LPG	3	3000	RoHS & Green	SN	N / A for Pkg Type	-40 to 150	+AJVA	Samples
DRV5053VAELPGQ1	ACTIVE	TO-92	LPG	3	1000	RoHS & Green	SN	N / A for Pkg Type	-40 to 150	+AJVA	Samples
DRV5053VAQDBZRQ1	ACTIVE	SOT-23	DBZ	3	3000	RoHS & Green	NIPDAUAG	Level-1-260C-UNLIM	-40 to 125	+AKVA	Samples
DRV5053VAQDBZTQ1	ACTIVE	SOT-23	DBZ	3	250	RoHS & Green	NIPDAUAG	Level-1-260C-UNLIM	-40 to 125	+AKVA	Samples
DRV5053VAQLPGMQ1	ACTIVE	TO-92	LPG	3	3000	RoHS & Green	SN	N / A for Pkg Type	-40 to 125	+AKVA	Samples
DRV5053VAQLPGQ1	ACTIVE	TO-92	LPG	3	1000	RoHS & Green	SN	N / A for Pkg Type	-40 to 125	+AKVA	Samples

(1) The marketing status values are defined as follows:
ACTIVE: Product device recommended for new designs.
LIFEBUY: TI has announced that the device will be discontinued, and a lifetime-buy period is in effect.
NRND: Not recommended for new designs. Device is in production to support existing customers, but TI does not recommend using this part in a new design.
PREVIEW: Device has been announced but is not in production. Samples may or may not be available.
OBSOLETE: TI has discontinued the production of the device.

(2) **RoHS:** TI defines "RoHS" to mean semiconductor products that are compliant with the current EU RoHS requirements for all 10 RoHS substances, including the requirement that RoHS substance do not exceed 0.1% by weight in homogeneous materials. Where designed to be soldered at high temperatures, "RoHS" products are suitable for use in specified lead-free processes. TI may reference these types of products as "Pb-Free".
RoHS Exempt: TI defines "RoHS Exempt" to mean products that contain lead but are compliant with EU RoHS pursuant to a specific EU RoHS exemption.
Green: TI defines "Green" to mean the content of Chlorine (Cl) and Bromine (Br) based flame retardants meet JS709B low halogen requirements of <=1000ppm threshold. Antimony trioxide based flame retardants must also meet the <=1000ppm threshold requirement.

(3) MSL, Peak Temp. - The Moisture Sensitivity Level rating according to the JEDEC industry standard classifications, and peak solder temperature.

(4) There may be additional marking, which relates to the logo, the lot trace code information, or the environmental category on the device.

(5) Multiple Device Markings will be inside parentheses. Only one Device Marking contained in parentheses and separated by a "~" will appear on a device. If a line is indented then it is a continuation of the previous line and the two combined represent the entire Device Marking for that device.

(6) Lead finish/Ball material - Orderable Devices may have multiple material finish options. Finish options are separated by a vertical ruled line. Lead finish/Ball material values may wrap to two lines if the finish value exceeds the maximum column width.

Important Information and Disclaimer: The information provided on this page represents TI's knowledge and belief as of the date that it is provided. TI bases its knowledge and belief on information provided by third parties, and makes no representation or warranty as to the accuracy of such information. Efforts are underway to better integrate information from third parties. TI has taken and continues to take reasonable steps to provide representative and accurate information but may not have conducted destructive testing or chemical analysis on incoming materials and chemicals. TI and TI suppliers consider certain information to be proprietary, and thus CAS numbers and other limited information may not be available for release.

In no event shall TI's liability arising out of such information exceed the total purchase price of the TI part(s) at issue in this document sold by TI to Customer on an annual basis.

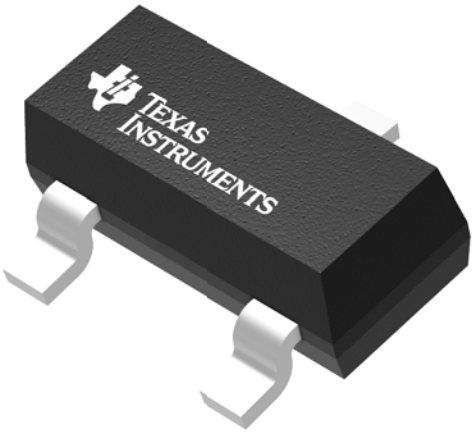

Images above are just a representation of the package family, actual package may vary.
Refer to the product data sheet for package details.

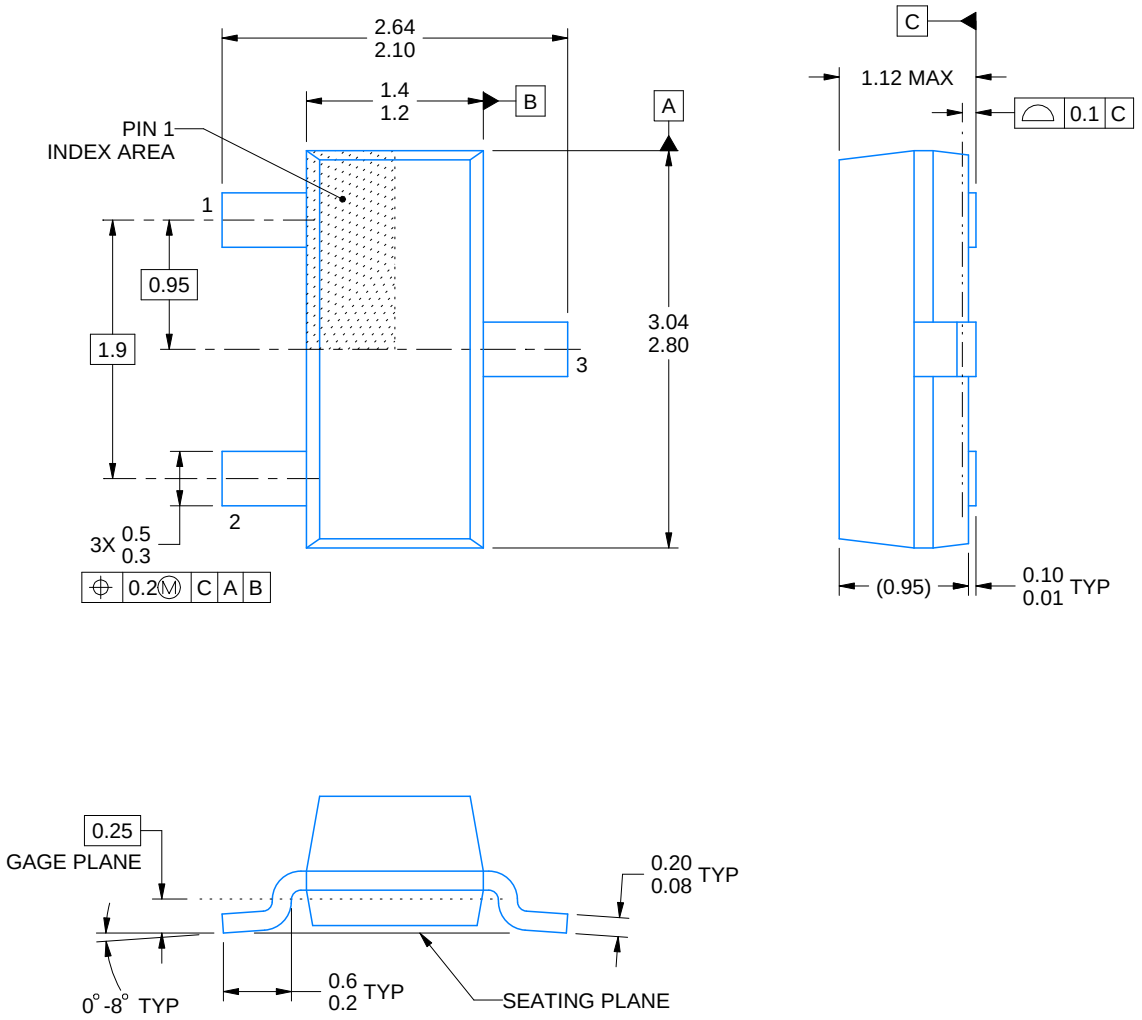

4214838/C 04/2017

NOTES:

1. All linear dimensions are in millimeters. Any dimensions in parenthesis are for reference only. Dimensioning and tolerancing per ASME Y14.5M.
2. This drawing is subject to change without notice.
3. Reference JEDEC registration TO-236, except minimum foot length.

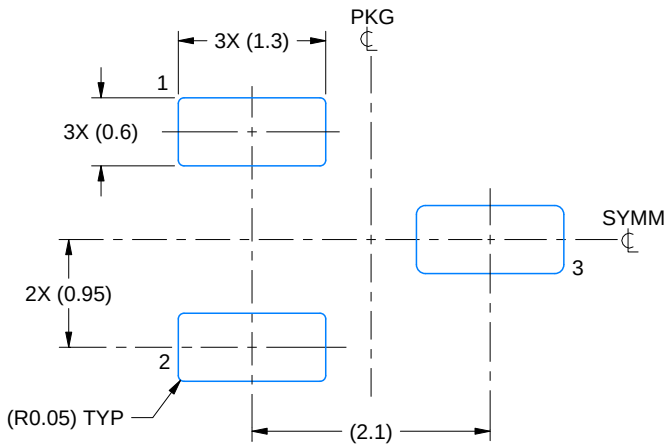

LAND PATTERN EXAMPLE
SCALE:15X

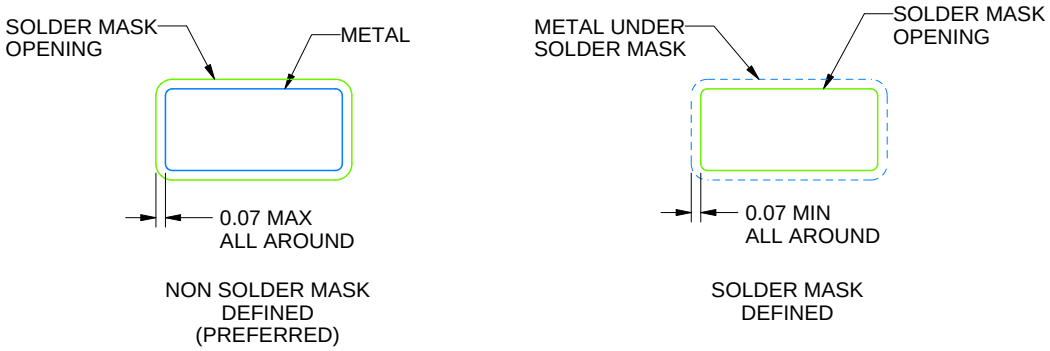

SOLDER MASK DETAILS

4214838/C 04/2017

NOTES: (continued)

4. Publication IPC-7351 may have alternate designs.
5. Solder mask tolerances between and around signal pads can vary based on board fabrication site.

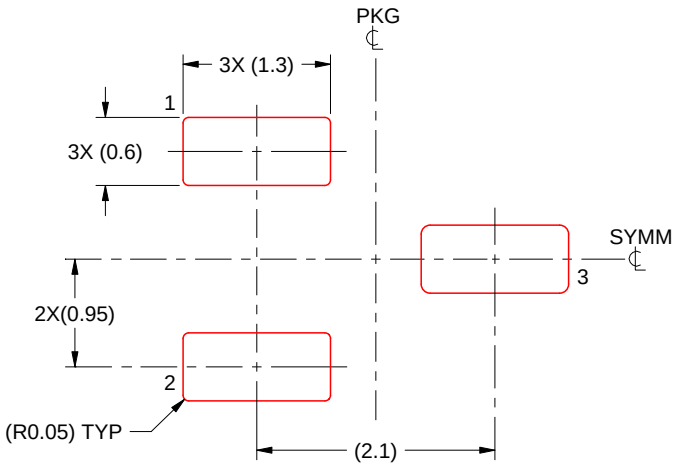

SOLDER PASTE EXAMPLE
BASED ON 0.125 THICK STENCIL
SCALE:15X

4214838/C 04/2017

NOTES: (continued)

6. Laser cutting apertures with trapezoidal walls and rounded corners may offer better paste release. IPC-7525 may have alternate design recommendations.
7. Board assembly site may have different recommendations for stencil design.

PACKAGE OUTLINE

LPG0003A

TO-92 - 5.05 mm max height

TRANSISTOR OUTLINE

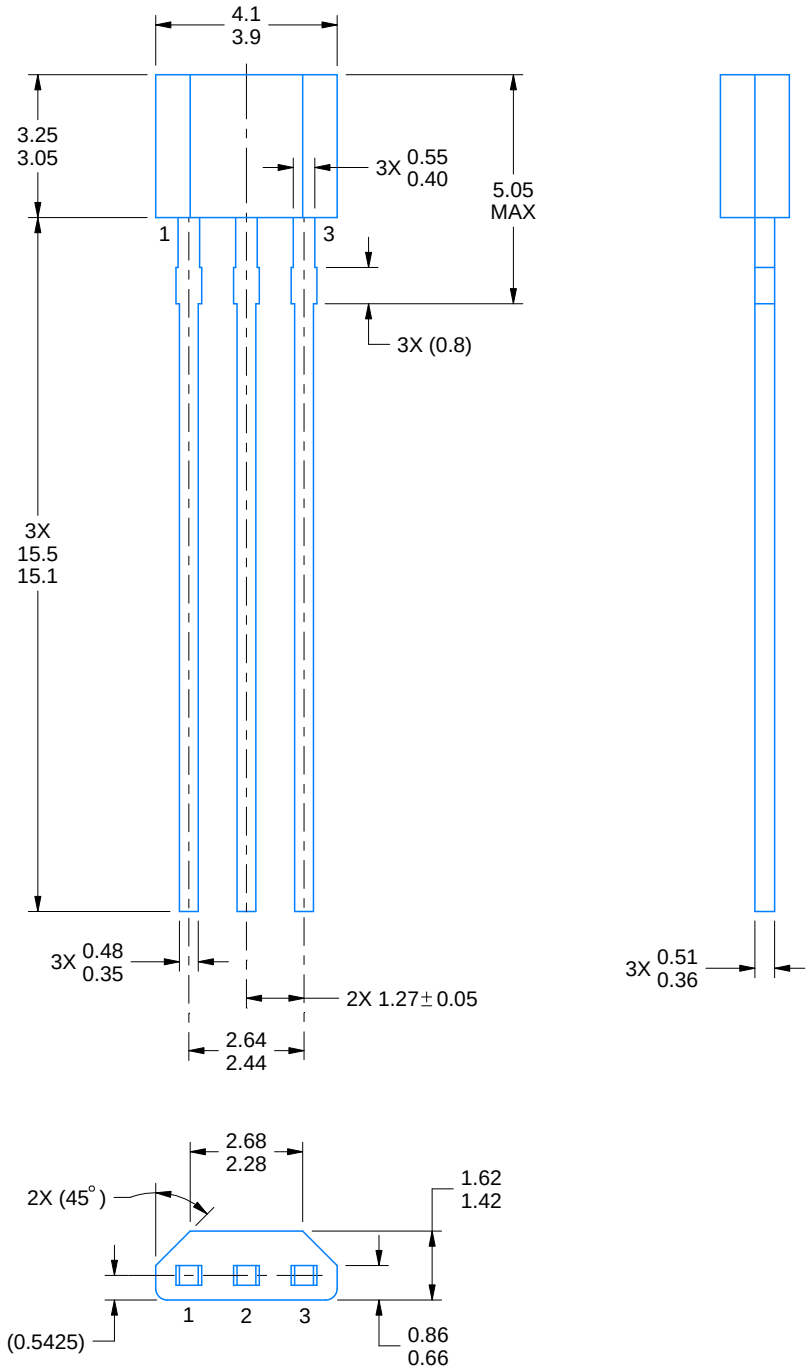

4221343/C 01/2018

NOTES:

1. All linear dimensions are in millimeters. Any dimensions in parenthesis are for reference only. Dimensioning and tolerancing per ASME Y14.5M.
2. This drawing is subject to change without notice.

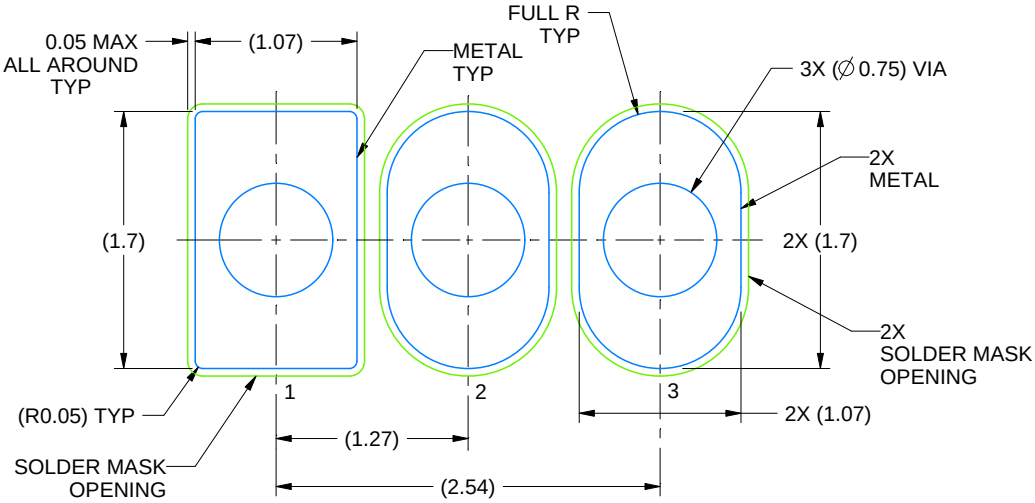

LAND PATTERN EXAMPLE
NON-SOLDER MASK DEFINED
SCALE:20X

4221343/C 01/2018

TRANSISTOR OUTLINE

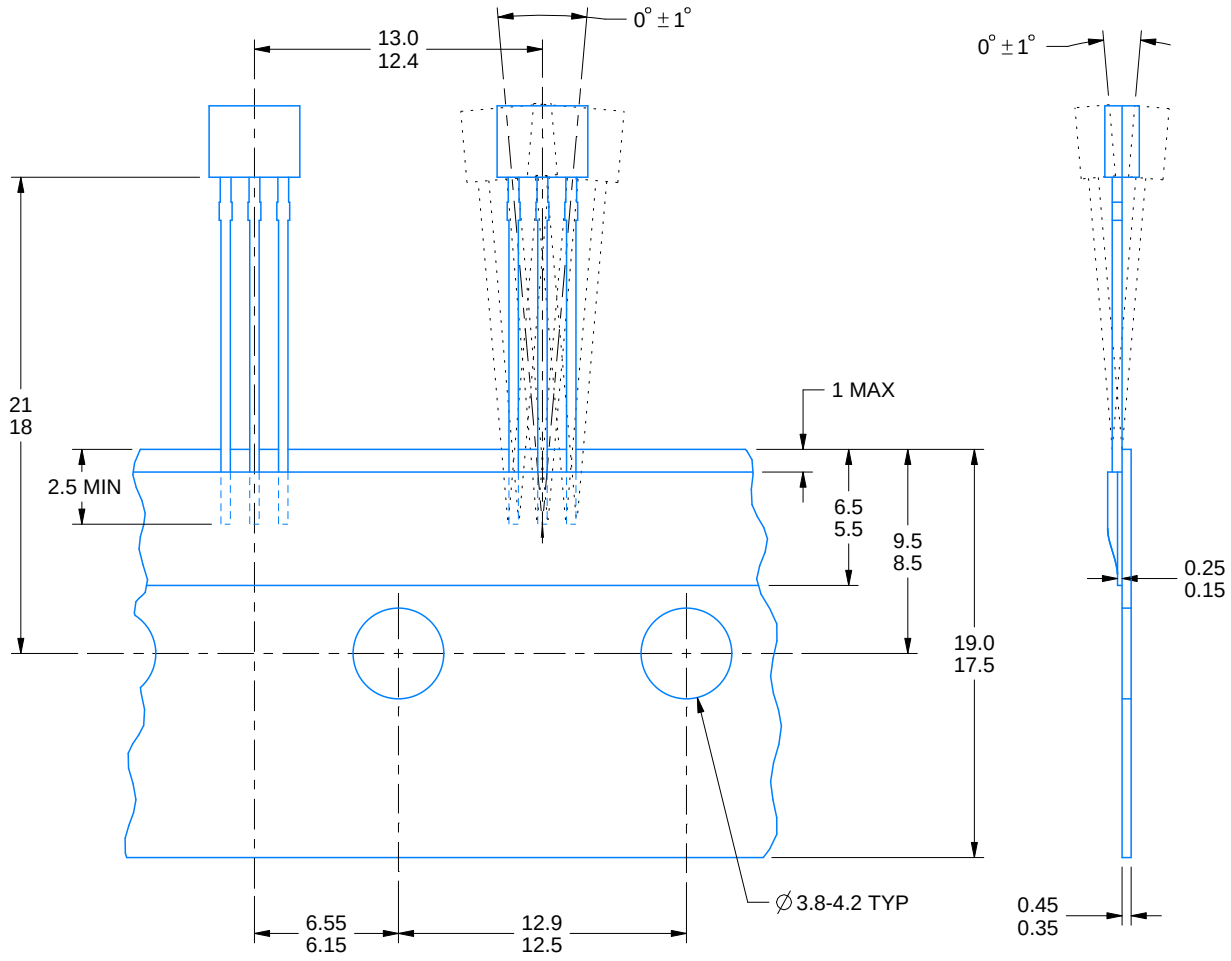

4221343/C 01/2018

重要声明和免责声明

TI 均以“原样”提供技术性及可靠性数据（包括数据表）、设计资源（包括参考设计）、应用或其他设计建议、网络工具、安全信息和其他资源，不保证其中不含任何瑕疵，且不做任何明示或暗示的担保，包括但不限于对适销性、适合某特定用途或不侵犯任何第三方知识产权的暗示担保。

所述资源可供专业开发人员应用TI 产品进行设计使用。您将对以下行为独自承担全部责任：(1) 针对您的应用选择合适的TI 产品；(2) 设计、验证并测试您的应用；(3) 确保您的应用满足相应标准以及任何其他安全、安保或其他要求。所述资源如有变更，恕不另行通知。TI 对您使用所述资源的授权仅限于开发资源所涉及TI 产品的相关应用。除此之外不得复制或展示所述资源，也不提供其它TI或任何第三方的知识产权授权许可。如因使用所述资源而产生任何索赔、赔偿、成本、损失及债务等，TI对此概不负责，并且您须赔偿由此对TI 及其代表造成的损害。

TI 所提供产品均受TI 的销售条款 (http://www.ti.com.cn/zh-cn/legal/termsofsale.html) 以及ti.com.cn上或随附TI产品提供的其他可适用条款的约束。TI提供所述资源并不扩展或以其他方式更改TI 针对TI 产品所发布的可适用的担保范围或担保免责声明。

邮寄地址：上海市浦东新区世纪大道 1568 号中建大厦 32 楼，邮政编码：200122
Copyright © 2020 德州仪器半导体技术（上海）有限公司