Quad/Octal, Simultaneous Sampling, 16-Bit Analog-to-Digital Converters

FEATURES

- **Simultaneously Sample Four/Eight Channels**
- **Selectable Operating Modes:**
  High-Speed: 52kSPS Data Rate, 31mW/ch
  Low-Power: 10kSPS Data Rate, 7mW/ch
- **AC Performance:**
  25kHz Bandwidth
  97dB SNR
  –105dB THD
- **DC Performance:**
  2µV/°C Offset Drift
  2ppm/°C Gain Drift
- **Digital Filter:**
  Linear Phase Response
  Passband Ripple: ±0.005dB
  Stop Band Attenuation: 100dB
- **Selectable SPI™ or Frame Sync Serial Interface**
- **Simple Pin-Driven Control**
- **Low Sampling Aperture Error**
- **Specified from –40°C to +105°C**
- **Analog Supply: 5V**
- **I/O Supply: 1.8V to 3.3V**
- **Digital Core Supply: 1.8V**

APPLICATIONS

- **3-Phase Power Monitors**
- **Defibrillators and ECG Monitors**
- **Coriolis Flow Meters**
- **Vibration/Modal Analysis**

DESCRIPTION

The ADS1174 (quad) and ADS1178 (octal) are multiple delta-sigma (ΔΣ) analog-to-digital converters (ADCs) with data rates up to 52k samples-per-second (SPS), which allow synchronous sampling of four and eight channels. These devices use identical packages, and are also compatible with the high-performance 24-bit ADS1274 and ADS1278, permitting drop-in upgrades.

The delta-sigma architecture offers near ideal 16-bit ac performance (97dB SNR, –105dB THD, 1LSB linearity) combined with 0.005dB passband ripple and linear phase response.

The high-order, chopper-stabilized modulator achieves very low drift (2µV/°C offset, 2ppm/°C gain) and low noise ($1LSB_{PP}$). The on-chip finite impulse response (FIR) filter provides a usable signal bandwidth up to 90% of the Nyquist rate with 100dB of stop band attenuation while suppressing modulator and signal out-of-band noise.

Two operating modes allow for optimization of speed and power: High-speed mode (31mW/Ch at 52kSPS), and Low-power mode (7mW/Ch at 10kSPS).

A $\overline{\text{SYNC}}$ input control pin allows the device conversions to be started and synchronized to an external event. SPI and Frame-Sync serial interfaces are supported. The device is fully specified over the extended industrial range (–40°C to +105°C) and is available in an HTQFP-64 PowerPAD™ package.

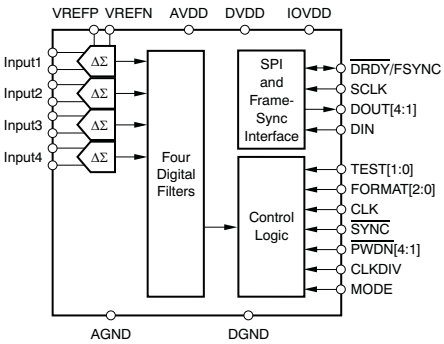

ADS1174

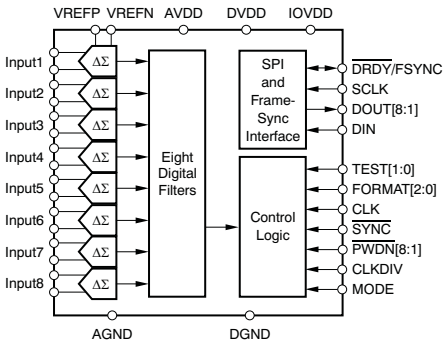

ADS1178

Please be aware that an important notice concerning availability, standard warranty, and use in critical applications of Texas Instruments semiconductor products and disclaimers thereto appears at the end of this data sheet.

PowerPAD is a trademark of Texas Instruments.
SPI is a trademark of Motorola, Inc.
All other trademarks are the property of their respective owners.

PRODUCTION DATA information is current as of publication date. Products conform to specifications per the terms of the Texas Instruments standard warranty. Production processing does not necessarily include testing of all parameters.

Copyright © 2007–2008, Texas Instruments Incorporated

This integrated circuit can be damaged by ESD. Texas Instruments recommends that all integrated circuits be handled with appropriate precautions. Failure to observe proper handling and installation procedures can cause damage.

ESD damage can range from subtle performance degradation to complete device failure. Precision integrated circuits may be more susceptible to damage because very small parametric changes could cause the device not to meet its published specifications.

ORDERING INFORMATION

For the most current package and ordering information see the Package Option Addendum at the end of this document, or see the TI web site at www.ti.com.

ABSOLUTE MAXIMUM RATINGS

over operating free-air temperature range unless otherwise noted(1)

PARAMETER	ADS1174, ADS1178	UNIT
AVDD to AGND	–0.3 to +6.0	V
DVDD, IOVDD to DGND	–0.3 to +3.6	V
AGND to DGND	–0.3 to +0.3	V
Input Current	100, Momentary	mA
	10, Continuous	mA
Analog Input to AGND	–0.3 to AVDD + 0.3	V
Digital Input or Output to DGND	–0.3 to IOVDD + 0.3	V
Maximum Junction Temperature	+150	°C
Operating Temperature Range	–40 to +125	°C
Storage Temperature Range	–60 to +150	°C

(1) Stresses above these ratings may cause permanent damage. Exposure to absolute maximum conditions for extended periods may degrade device reliability. These are stress ratings only, and functional operation of the device at these or any other conditions beyond those specified is not implied.

Copyright © 2007–2008, Texas Instruments Incorporated

ELECTRICAL CHARACTERISTICS

Limit specifications at T_A = –40°C to +105°C. Typical specifications at T_A = +25°C, AVDD = +5V, DVDD = +1.8V, IOVDD = +3.3V, f_{CLK} = 27MHz, VREFP = 2.5V, VREFN = 0V, and all channels active, unless otherwise noted.

PARAMETER		TEST CONDITIONS	ADS1174, ADS1178			UNIT
			MIN	TYP	MAX	
ANALOG INPUTS						
Full-scale input voltage (FSR[1])		V_{IN} = (AINP – AINN)		$\pm V_{REF}$		V
Absolute input voltage		AINP or AINN to AGND	AGND – 0.1		AVDD + 0.1	V
Common-mode input voltage		V_{CM} = (AINP + AINN)/2		2.5		V
Differential input impedance	High-Speed mode			28		kΩ
	Low-Power mode			140		kΩ
DC PERFORMANCE						
Resolution		No missing codes	16			Bits
Data rate (f_{DATA})	High-Speed mode			52,734		SPS
	Low-Power mode			10,547		SPS
Integral nonlinearity (INL)[2]		Differential input		±0.3	±1	LSB
Offset error				0.3	2	mV
Offset drift				2		µV/°C
Gain error				0.1	0.5	%
Gain drift				2		ppm/°C
Noise		Shorted input		1		LSB_{PP}
Common-mode rejection		f_{CM} = 60Hz[3]		100		dB
Power-supply rejection	AVDD	f_{PS} = 60Hz[3]		75		dB
	DVDD	f_{PS} = 60Hz[3]		85		dB
	IOVDD	f_{PS} = 60Hz[3]		90		dB
V_{COM} output voltage		No load		AVDD/2		V
AC PERFORMANCE						
Crosstalk		V_{IN} = 1kHz, –0.5dBFS		–107		dB
Signal-to-noise ratio (SNR) (unweighted)		V_{IN} = 1kHz, –0.5dBFS	92	97		dB
Total harmonic distortion (THD)[4]	High-Speed mode	V_{IN} = 1kHz, –0.5dBFS		–105	–96	dB
Spurious-free dynamic range				106		dB
Passband ripple					±0.005	dB
Passband				0.453 f_{DATA}		Hz
–3dB Bandwidth				0.49 f_{DATA}		Hz
Stop band attenuation			100			dB
Stop band			0.547 f_{DATA}		63.453 f_{DATA}	Hz
Group delay				38/f_{DATA}		s
Settling time (latency)		Complete settling		76/f_{DATA}		s

(1) FSR = full-scale range = $2V_{REF}$
(2) Best-fit method.
(3) f_{CM} is the input common-mode frequency. f_{PS} is the power-supply frequency.
(4) THD includes the first nine harmonics of the input signal.

Copyright © 2007–2008, Texas Instruments Incorporated

ELECTRICAL CHARACTERISTICS (continued)

Limit specifications at T_A = –40°C to +105°C. Typical specifications at T_A = +25°C, AVDD = +5V, DVDD = +1.8V, IOVDD = +3.3V, f_{CLK} = 27MHz, VREFP = 2.5V, VREFN = 0V, and all channels active, unless otherwise noted.

PARAMETER		TEST CONDITIONS	ADS1174, ADS1178			UNIT
			MIN	TYP	MAX	
VOLTAGE REFERENCE INPUTS						
Reference input voltage (V_{REF})		V_{REF} = VREFP – VREFN	0.5	2.5	3.1	V
Negative reference input (VREFN)			AGND – 0.1		AGND + 0.1	V
Positive reference input (VREFP)			VREFN + 0.5		VREFN + 3.1	V
ADS1174 Reference Input impedance	High-Speed mode			2.6		kΩ
	Low-Power mode			13		kΩ
ADS1178 Reference Input impedance	High-Speed mode			1.3		kΩ
	Low-Power mode			6.5		kΩ
DIGITAL INPUT/OUTPUT (IOVDD = 1.8V to 3.6V)						
V_{IH}			0.7 IOVDD		IOVDD	V
V_{IL}			DGND		0.3 IOVDD	V
V_{OH}		I_{OH} = 4mA	0.8 IOVDD		IOVDD	V
V_{OL}		I_{OL} = 4mA	DGND		0.2 IOVDD	V
Input leakage		0 < $V_{IN\ DIGITAL}$ < IOVDD			±10	µA
Master clock rate (f_{CLK})			0.1		27	MHz
POWER SUPPLY						
AVDD			4.75	5	5.25	V
DVDD			1.65	1.8	1.95	V
IOVDD			1.65		3.6	V
Power-down current	AVDD			1	10	µA
	DVDD			1	15	µA
	IOVDD			1	10	µA
ADS1174						
ADS1174 AVDD current	High-Speed mode			23	35	mA
	Low-Power mode			5	9	mA
ADS1174 DVDD current	High-Speed mode			10	15	mA
	Low-Power mode			2.5	4.5	mA
ADS1174 IOVDD current	High-Speed mode			0.075	0.3	mA
	Low-Power mode			0.02	0.15	mA
ADS1174 Power dissipation	High-Speed mode			135	210	mW
	Low-Power mode			30	55	mW
ADS1178						
ADS1178 AVDD current	High-Speed mode			44	64	mA
	Low-Power mode			9	14	mA
ADS1178 DVDD current	High-Speed mode			12	17	mA
	Low-Power mode			3	4.5	mA
ADS1178 IOVDD current	High-Speed mode			0.125	0.5	mA
	Low-Power mode			0.035	0.2	mA
ADS1178 Power dissipation	High-Speed mode			245	355	mW
	Low-Power mode			50	80	mW

Copyright © 2007–2008, Texas Instruments Incorporated

ADS1174/ADS1178 PIN ASSIGNMENTS

PAP PACKAGE
HTQFP-64
(TOP VIEW)

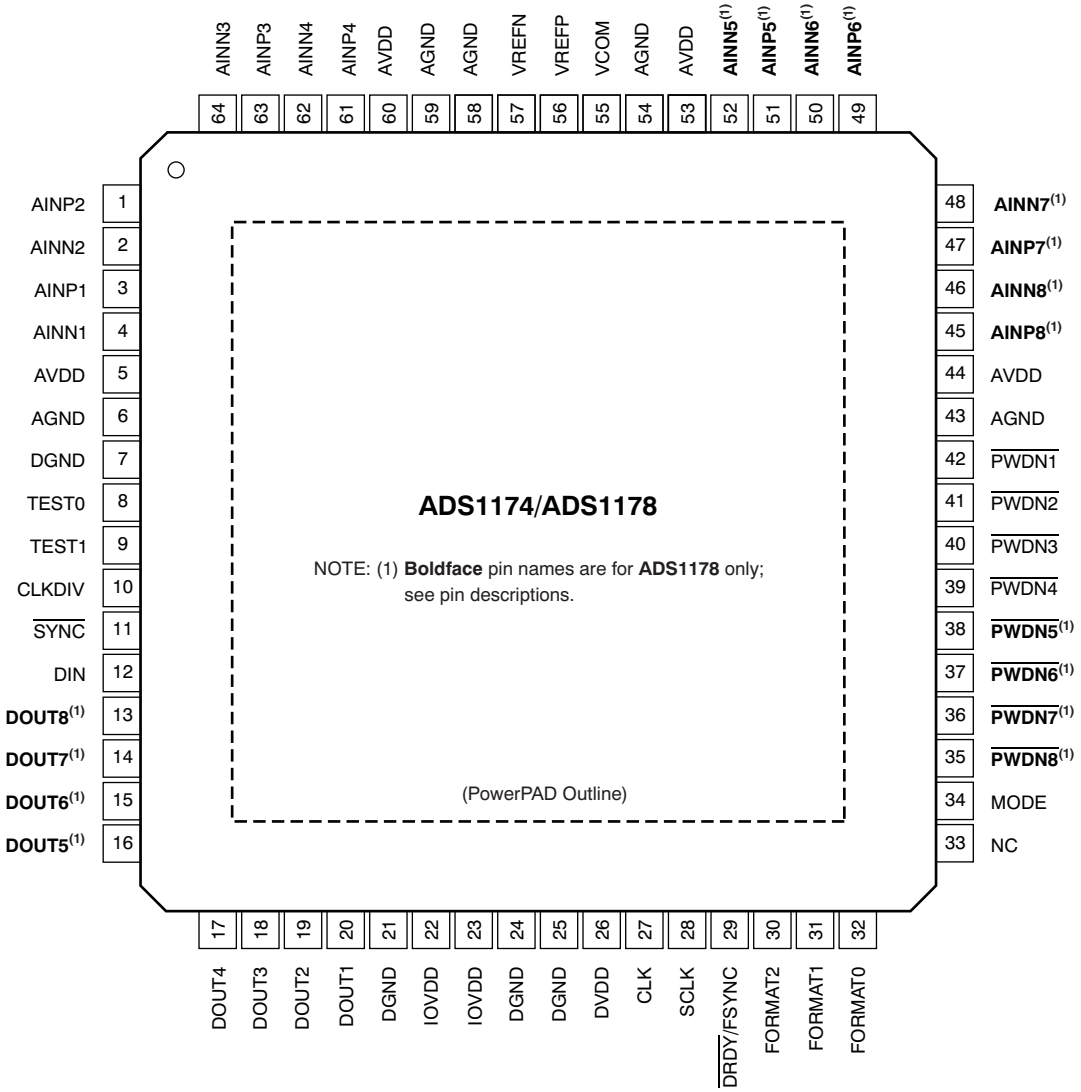

ADS1174/ADS1178 PIN DESCRIPTIONS

PIN		FUNCTION	DESCRIPTION
NAME	NO.		
AGND	6, 43, 54, 58, 59	Analog ground	Analog ground; connect to DGND using a single plane.
AINP1	3	Analog input	**ADS1178:** AINP[8:1] Positive analog input, channels 8 through 1. **ADS1174:** AINP[8:5] Connected to internal ESD rails. The inputs may float. AINP[4:1] Positive analog input, channels 4 through 1.
AINP2	1	Analog input	
AINP3	63	Analog input	
AINP4	61	Analog input	
AINP5	51	Analog input	
AINP6	49	Analog input	
AINP7	47	Analog input	
AINP8	45	Analog input	

ADS1174/ADS1178 PIN DESCRIPTIONS (continued)

PIN			
NAME	NO.	FUNCTION	DESCRIPTION
AINN1	4	Analog input	**ADS1178:** AINN[8:1] Negative analog input, channels 8 through 1. **ADS1174:** AINN[8:5] Connected to internal ESD rails. The inputs may float. AINN[4:1] Negative analog input, channels 4 through 1.
AINN2	2	Analog input	
AINN3	64	Analog input	
AINN4	62	Analog input	
AINN5	52	Analog input	
AINN6	50	Analog input	
AINN7	48	Analog input	
AINN8	46	Analog input	
AVDD	5, 44, 53, 60	Analog power supply	Analog power supply (4.75V to 5.25V).
VCOM	55	Analog output	AVDD/2 Unbuffered analog output.
VREFN	57	Analog input	Negative reference input.
VREFP	56	Analog input	Positive reference input.
CLK	27	Digital input	Master clock input (maximum 27MHz).
CLKDIV	10	Digital input	CLK input divider control: 1 = 27MHz 0 = 13.5MHz (high-speed) / 5.4MHz (low-power)
DGND	7, 21, 24, 25	Digital ground	Digital ground power supply.
DIN	12	Digital input	Daisy-chain data input.
DOUT1	20	Digital output	DOUT1 is TDM data output (TDM mode). **ADS1178:** DOUT[8:1] Data output for channels 8 through 1. **ADS1174:** DOUT[8:5] Internally connected to active circuitry; outputs are driven. DOUT[4:1] Data output for channels 4 through 1.
DOUT2	19	Digital output	
DOUT3	18	Digital output	
DOUT4	17	Digital output	
DOUT5	16	Digital output	
DOUT6	15	Digital output	
DOUT7	14	Digital output	
DOUT8	13	Digital output	
$\overline{\text{DRDY}}$/ FSYNC	29	Digital input/output	Frame-Sync protocol: frame clock input; SPI protocol: data ready output.
DVDD	26	Digital power supply	Digital core power supply (+1.65V to +1.95V).
FORMAT0	32	Digital input	FORMAT[2:0] Selects between Frame-Sync/SPI protocol, TDM/discrete data outputs, fixed/dynamic position TDM data, and modulator mode/normal operating mode.
FORMAT1	31	Digital input	
FORMAT2	30	Digital input	
IOVDD	22, 23	Digital power supply	I/O power supply (+1.65V to +3.6V).
MODE	34	Digital input	MODE: 0 = High-Speed mode 1 = Low-Power mode.
NC	33	—	Internally connected to IOVDD (connect to IOVDD or leave open).
$\overline{\text{PWDN1}}$	42	Digital input	**ADS1178:** $\overline{\text{PWDN}}$[8:1] Power-down control for channels 8 through 1. **ADS1174:** $\overline{\text{PWDN}}$[8:5] must = 0V. $\overline{\text{PWDN}}$[4:1] Power-down control for channels 4 through 1.
$\overline{\text{PWDN2}}$	41	Digital input	
$\overline{\text{PWDN3}}$	40	Digital input	
$\overline{\text{PWDN4}}$	39	Digital input	
$\overline{\text{PWDN5}}$	38	Digital input	
$\overline{\text{PWDN6}}$	37	Digital input	
$\overline{\text{PWDN7}}$	36	Digital input	
$\overline{\text{PWDN8}}$	35	Digital input	
SCLK	28	Digital input	Serial clock input.
$\overline{\text{SYNC}}$	11	Digital input	Synchronize input (all channels).
TEST0	8	Digital input	TEST[1:0] Test mode select: 00 = normal operation 11 = test mode
TEST1	9	Digital input	

Copyright © 2007–2008, Texas Instruments Incorporated

TIMING CHARACTERISTICS: SPI FORMAT

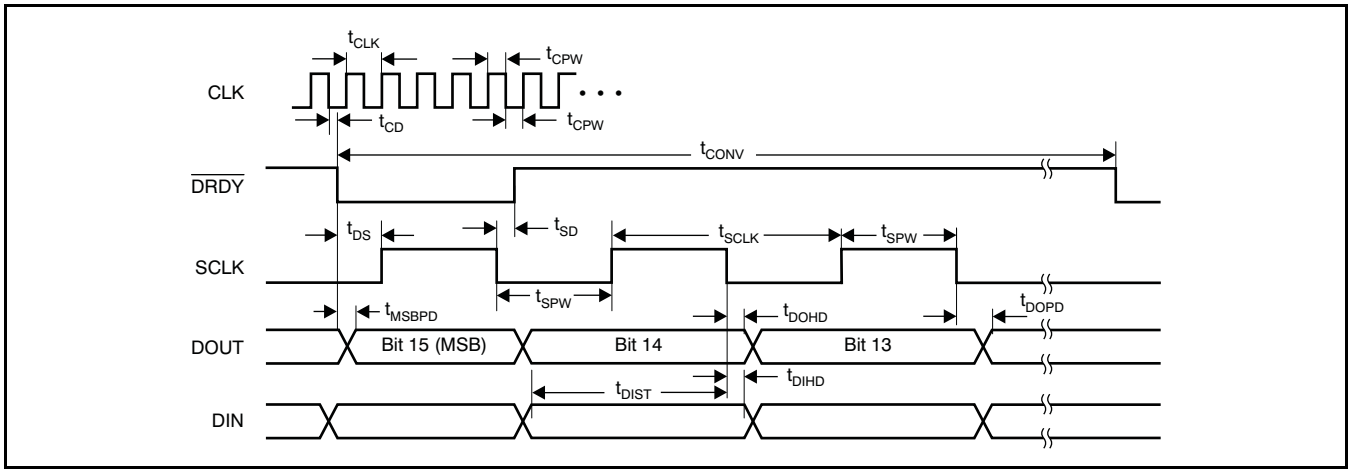

TIMING REQUIREMENTS: SPI FORMAT

For T_A = –40°C to +105°C, IOVDD = 1.65V to 3.6V, and DVDD = 1.65V to 1.95V.

SYMBOL	PARAMETER	MIN	TYP	MAX	UNIT
t_{CLK}	CLK period ($1/f_{CLK}$)(1)	37		10,000	ns
t_{CPW}	CLK positive or negative pulse width	15			ns
t_{CONV}	Conversion period ($1/f_{DATA}$)(2)	256		2560	t_{CLK}
t_{CD}(3)	Falling edge of CLK to falling edge of $\overline{DRDY}$		22		ns
t_{DS}(3)	Falling edge of $\overline{DRDY}$ to rising edge of first SCLK to retrieve data	1			t_{CLK}
t_{MSBPD}	$\overline{DRDY}$ falling edge to DOUT MSB valid (propagation delay)			16	ns
t_{SD}(3)	Falling edge of SCLK to rising edge of $\overline{DRDY}$		18		ns
t_{SCLK}(4)	SCLK period	1			t_{CLK}
t_{SPW}	SCLK positive or negative pulse width	0.4			t_{CLK}
t_{DOHD}(3)(5)	SCLK falling edge to new DOUT invalid (hold time)	10			ns
t_{DOPD}(3)	SCLK falling edge to new DOUT valid (propagation delay)			32	ns
t_{DIST}	New DIN valid to falling edge of SCLK (setup time)	6			ns
t_{DIHD}(5)	Old DIN valid to falling edge of SCLK (hold time)	6			ns

(1) f_{CLK} = 27MHz maximum.
(2) Depends on MODE[1:0] and CLKDIV selection. See Table 4 (f_{CLK}/f_{DATA}).
(3) Load on $\overline{DRDY}$ and DOUT = 20pF.
(4) For best performance, limit f_{SCLK}/f_{CLK} to ratios of 1, 1/2, 1/4, 1/8, etc.
(5) t_{DOHD} (DOUT hold time) and t_{DIHD} (DIN hold time) are specified under opposite worst-case conditions (digital supply voltage and ambient temperature). Under equal conditions, with DOUT connected directly to DIN, the timing margin is >4ns.

Copyright © 2007–2008, Texas Instruments Incorporated

TIMING CHARACTERISTICS: FRAME-SYNC FORMAT

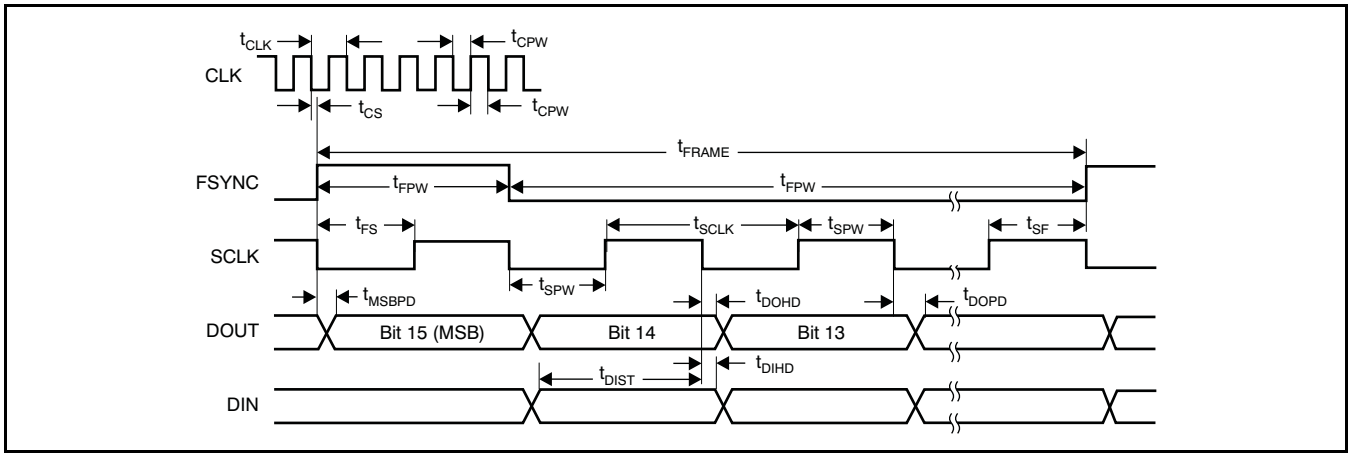

TIMING REQUIREMENTS: FRAME-SYNC FORMAT

For T_A = –40°C to +105°C, IOVDD = 1.65V to 3.6V, and DVDD = 1.65V to 1.95V.

SYMBOL	PARAMETER	MIN	TYP	MAX	UNIT
t_{CLK}	CLK period ($1/f_{CLK}$)	37		10,000	ns
t_{CPW}	CLK positive or negative pulse width	12			ns
t_{CS}	Falling edge of CLK to falling edge of SCLK	–0.25		0.25	t_{CLK}
t_{FRAME}	Frame period ($1/f_{DATA}$)(1)	256		2560	t_{CLK}
t_{FPW}	FSYNC positive or negative pulse width	1			t_{SCLK}
t_{FS}	Rising edge of FSYNC to rising edge of SCLK	5			ns
t_{SF}	Rising edge of SCLK to rising edge of FSYNC	5			ns
t_{SCLK}	SCLK period(2)	1			t_{CLK}
t_{SPW}	SCLK positive or negative pulse width	0.4			t_{CLK}
t_{DOHD}(3)(4)	SCLK falling edge to old DOUT invalid (hold time)	10			ns
t_{DOPD}(4)	SCLK falling edge to new DOUT valid (propagation delay)			31	ns
t_{MSBPD}	FSYNC rising edge to DOUT MSB valid (propagation delay)			31	ns
t_{DIST}	New DIN valid to falling edge of SCLK (setup time)	6			ns
t_{DIHD}(3)	Old DIN valid to falling edge of SCLK (hold time)	6			ns

(1) Depends on MODE[1:0] and CLKDIV selection. See Table 4 (f_{CLK}/f_{DATA}).
(2) SCLK must be continuously running and limited to ratios of 1, 1/2, 1/4, and 1/8 of f_{CLK}.
(3) t_{DOHD} (DOUT hold time) and t_{DIHD} (DIN hold time) are specified under opposite worst-case conditions (digital supply voltage and ambient temperature). Under equal conditions, with DOUT connected directly to DIN, the timing margin is >4ns.
(4) Load on DOUT = 20pF.

Copyright © 2007–2008, Texas Instruments Incorporated

OVERVIEW

The ADS1174 (quad) and ADS1178 (octal) are 16-bit, delta-sigma ADCs. They offer the combination of excellent linearity, low noise, and low power consumption. Figure 1 shows the block diagram. Note that both devices are the same, except the ADS1174 has four ADCs, and the ADS1178 has eight ADCs. The pinout and package of the ADS1178 are compatible with the ADS1174 (and the 24-bit ADS1274 and ADS1278), permitting drop-in expandability or upgrades. The converters are comprised of either four (ADS1174) or eight (ADS1178) advanced, 6th-order, chopper-stabilized, delta-sigma modulators followed by low-ripple, linear phase FIR filters. The modulators measure the differential input signal, V_{IN} = (AINP – AINN), against the differential reference, V_{REF} = (VREFP – VREFN). The digital filters receive the modulator signal and provide a low-noise digital output.

To allow tradeoffs between speed and power, two modes of operation are supported: High-Speed and Low-Power. Table 1 summarizes the performance of each mode.

In High-Speed mode, the data rate is 52kSPS, and in Low-Power mode, the power dissipation is only 7mW/channel at 10.5kSPS.

The ADS1174/78 is configured by simply setting the appropriate I/O pins—there are no registers to program. Data are retrieved over a serial interface that supports both SPI and Frame-Sync formats. The ADS1174/78 has a daisy-chainable output and the ability to synchronize externally, so it can be used conveniently in systems requiring more than eight channels.

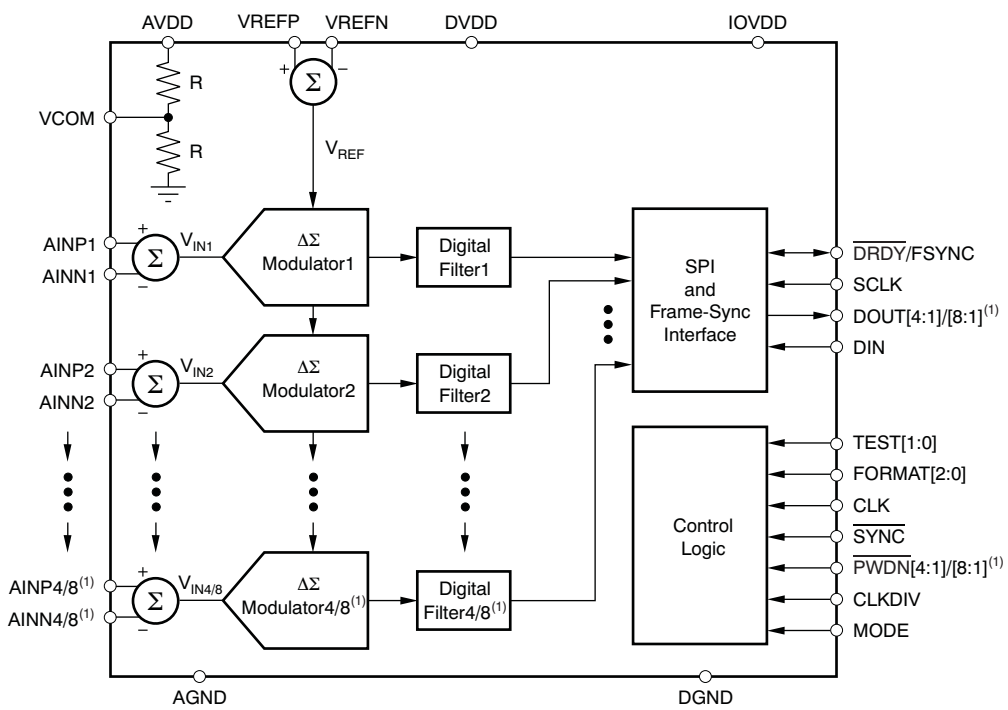

NOTE: (1) The ADS1174 has four channels; the ADS1178 has eight channels.

Figure 1. ADS1174/ADS1178 Block Diagram

Table 1. Operating Mode Performance Summary

MODE	DATA RATE (SPS)	PASSBAND (Hz)	SNR (dB)	NOISE (LSB_{PP})	POWER DISSIPATION PER CHANNEL(1) (mW)
High-Speed	52,734	23,889	97	1	31
Low-Power	10,547	4,778	97	1	7

(1) Measured with all channels operating.

Copyright © 2007–2008, Texas Instruments Incorporated

FUNCTIONAL DESCRIPTION

The ADS1174 and ADS1178 are 16-bit delta/sigma ADCs consisting of independent converters that digitize input signals simultaneously. The ADS1174 consists of four independent converters, while the ADS1178 has eight independent converters.

The converter is composed of two main functional blocks to perform the ADC conversions: the modulator and the digital filter. The modulator samples the input signal together with sampling the reference voltage to produce a 1's density output stream. The density of the output stream is proportional to the analog input level relative to the reference voltage. The pulse stream is filtered by the internal digital filter where the output conversion result is produced.

In operation, the signal inputs and reference inputs are sampled by the modulator at a high rate (typically 64x higher than the final output data rate). The quantization noise of the modulator is moved to a higher frequency range where the internal digital filter removes it. This process results in very low levels of noise within the signal passband.

Because the input signal is sampled at a very high rate, input signal aliasing does not occur until the input signal frequency approaches the modulator sampling rate. The high sampling rate of the modulator greatly relaxes the requirement of external antialiasing filters, thus eliminating passband phase errors that otherwise may be caused by the analog filter.

SAMPLING APERTURE MATCHING

The converters of the ADS1174/78 operate from the same CLK input. The CLK input controls the timing of the modulator sampling instant. The converter is designed so that the sampling skew (or modulator sampling aperture match) between channels is controlled. Furthermore, the digital filters are synchronized to start the convolution phase at the same modulator clock cycle. This design results in excellent phase match among the ADS1174/78 channels.

The phase match of one four-channel ADS1174 to that of another ADS1174 may not have the same degree of sampling match (the same is true for two 8-channel ADS1178s). As a result of manufacturing variations, differences in internal propagation delay of the internal CLK signal coupled with differences of the arrival of the external CLK signal to each device may cause larger sampling match errors. Equal length CLK traces or external clock distribution devices can be used to control the arrival of the CLK signals to help reduce the sampling match error.

FREQUENCY RESPONSE

The digital filter sets the overall frequency response. The filter uses a multi-stage FIR topology to provide linear phase with minimal passband ripple and high stop band attenuation. The oversampling ratio of the digital filter (that is, the ratio of the modulator sampling to the output data rate: f_{MOD}/f_{DATA}) is 64 for both High-Speed and Low-Power modes.

Figure 2 shows the frequency response of the ADS1174/78 normalized to f_{DATA}. Figure 3 shows the passband ripple. The transition from passband to stop band is illustrated in Figure 4. The overall frequency response repeats at 64x multiples of the modulator frequency f_{MOD}, as shown in Figure 5.

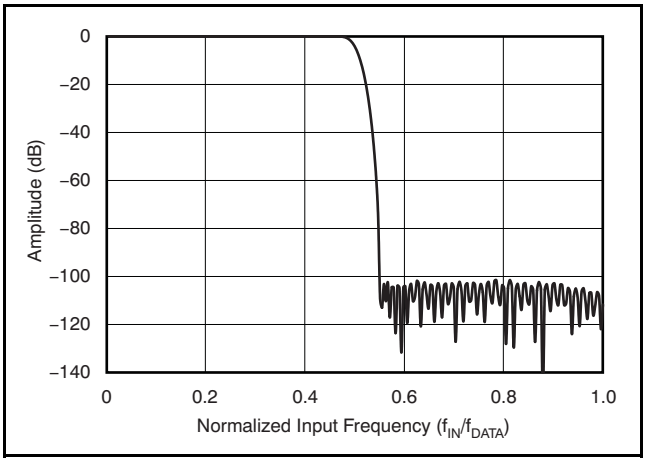

Figure 2. Frequency Response

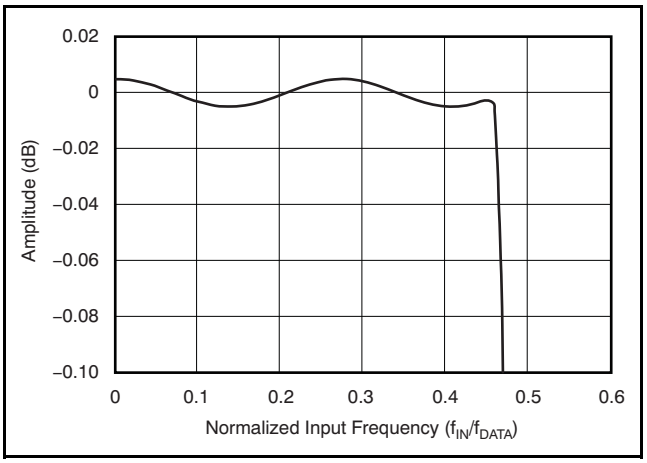

Figure 3. Passband Response

Copyright © 2007–2008, Texas Instruments Incorporated

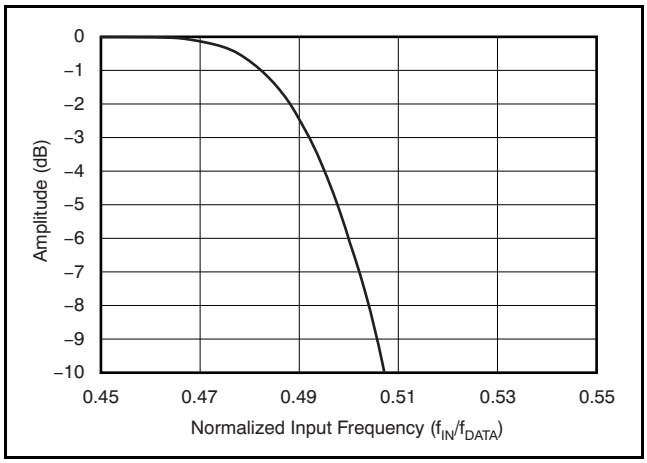

Figure 4. Transition Band Response

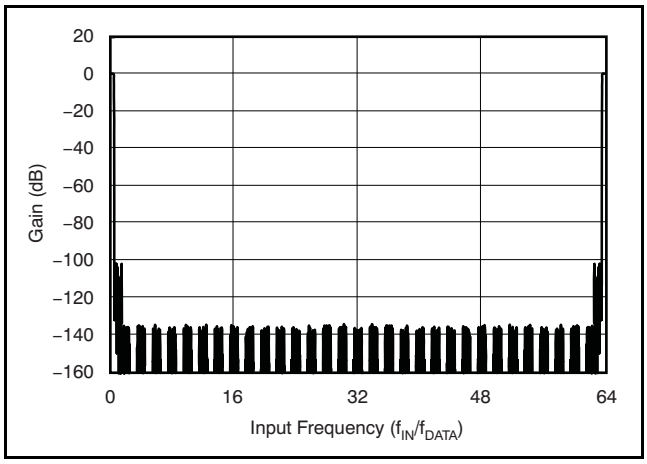

Figure 5. Frequency Response Out to f_{MOD}

These image frequencies, if present in the signal and not externally filtered, fold back (or alias) into the passband, causing errors. Table 2 lists the degree of image rejection versus external antialiasing filter order. The stop band of the ADS1174/78 provides 100dB attenuation of frequencies that begin just beyond the passband and continue out to f_{MOD}. Placing an antialiasing, low-pass filter in front of the ADS1174/78 inputs is recommended to limit possible high-amplitude, out-of-band signals and noise.

Table 2. Antialiasing Filter Order Image Rejection

ANTIALIASING FILTER ORDER	IMAGE REJECTION (dB) (f_{-3dB} at f_{DATA})
1	39
2	75
3	111

PHASE RESPONSE

The ADS1174/78 incorporates a multiple stage, linear phase digital filter. Linear phase filters exhibit constant delay time versus input frequency (constant group delay), which means the time delay from any instant of the input signal to the same instant of the output data is constant, and is independent of input signal frequency. This behavior results in essentially zero phase errors when analyzing multi-tone signals.

SETTLING TIME

As with frequency and phase response, the digital filter also determines settling time. Figure 6 shows the output settling behavior after a step change on the analog inputs normalized to conversion periods. The X-axis is given in units of conversion. Note that after the step change on the input occurs, the output data change very little prior to 30 conversion periods. The output data are fully settled after 76 conversion periods.

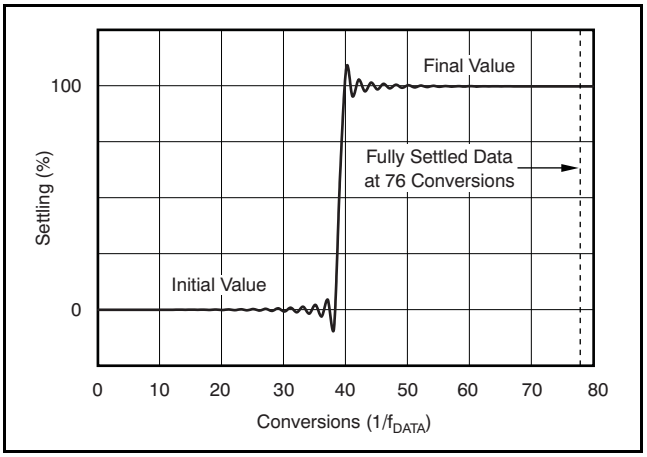

Figure 6. Step Response

ANALOG INPUTS (AINP, AINN)

The ADS1174/78 measures each differential input signal V_{IN} = (AINP – AINN) against the common differential reference V_{REF} = (VREFP – VREFN). The most positive measurable differential input is $+V_{REF}$, which produces the most positive digital output code of 7FFFh. Likewise, the most negative measurable differential input is $–V_{REF}$, which produces the most negative digital output code of 8000h.

For optimal performance, drive the ADS1174/78 inputs differentially. For single-ended input applications, one of the inputs (AINP or AINN) can be driven while the other input is fixed (typically, to AGND or +2.5V); fixing the input to +2.5V permits bipolar operation, thereby using the full range of the converter.

Copyright © 2007–2008, Texas Instruments Incorporated

While the ADS1174/78 measures the differential input signal, the absolute input voltage is also important. This is the voltage on either input (AINP or AINN) with respect to AGND. The range for this voltage is:

–0.1V < (AINN or AINP) < AVDD + 0.1V

If either input is taken below –0.4V or above (AVDD + 0.4), ESD protection diodes on the inputs may turn on.

If these conditions are possible, external Schottky clamp diodes or series resistors may be required to limit the input current to safe levels (see Absolute Maximum Ratings table).

The ADS1174/78 is a high-performance ADC. For optimum performance, it is critical that the appropriate circuitry be used to drive the ADS1174/78 inputs. See the *Applications Information* section for the recommended circuits.

The ADS1174/78 uses switched-capacitor circuitry to measure the input voltage. Internal capacitors are charged by the inputs and then discharged. Figure 7 shows a conceptual diagram of these circuits. Switch S_2 represents the net effect of the modulator circuitry in discharging the sampling capacitor; the actual implementation is different. The timing for switches S_1 and S_2 is shown in Figure 8. The sampling time (t_{SAMPLE}) is the inverse of modulator sampling frequency (f_{MOD}) and is a function of the mode, the CLKDIV input, and frequency of CLK, as shown in Table 3.

The average load presented by the switched capacitor input can be modeled with an effective differential impedance, as shown in Figure 9. Note that the effective impedance is a function of f_{MOD}.

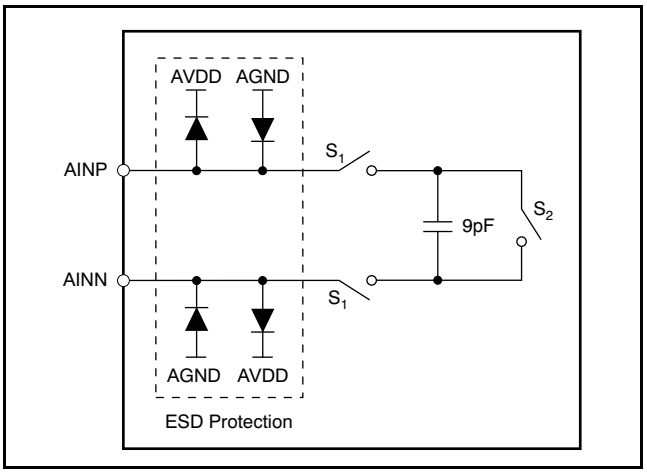

Figure 7. Equivalent Analog Input Circuitry

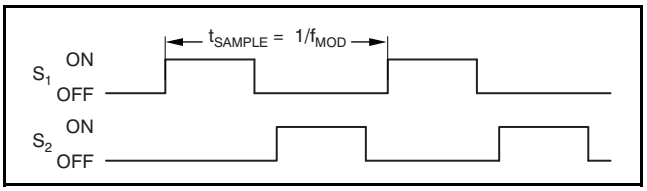

Figure 8. S_1 and S_2 Switch Timing for Figure 7

Table 3. Modulator Frequency (f_{MOD}) versus Mode Selection

MODE SELECTION	CLKDIV	f_{MOD}
High-Speed	1	$f_{CLK}/8$
	0	$f_{CLK}/4$
Low-Power	1	$f_{CLK}/40$
	0	$f_{CLK}/8$

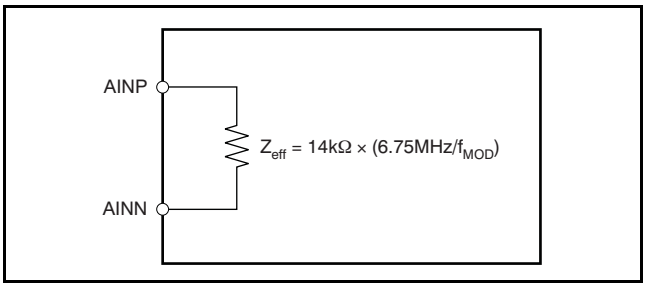

Figure 9. Effective Input Impedances

Copyright © 2007–2008, Texas Instruments Incorporated

VOLTAGE REFERENCE INPUTS (VREFP, VREFN)

The voltage reference for the ADS1174/78 ADC is the differential voltage between VREFP and VREFN: V_{REF} = (VREFP – VREFN). The voltage reference is common to all channels. The reference inputs use a structure similar to that of the analog inputs with the equivalent circuitry on the reference inputs shown in Figure 10. As with the analog inputs, the load presented by the switched capacitor can be modeled with an effective impedance, as shown in Figure 11. However, the reference input impedance depends on the number of active (enabled) channels in addition to f_{MOD}. As a result of the change of reference input impedance caused by enabling and disabling channels, the regulation and settling time of the external reference should be noted, so as not to affect the readings of other channels.

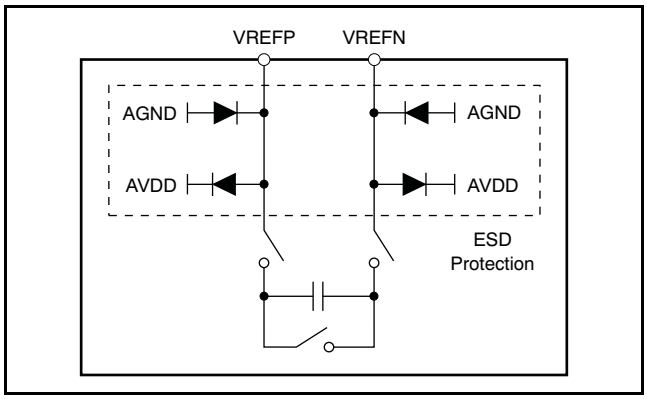

Figure 10. Equivalent Reference Input Circuitry

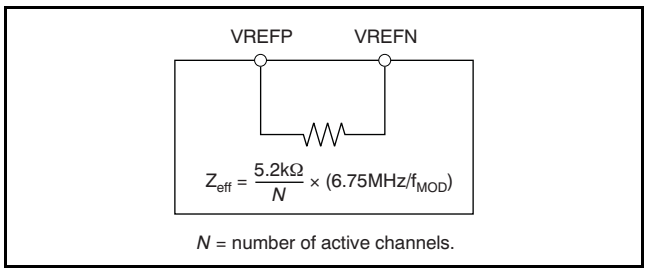

Figure 11. Effective Reference Impedance

ESD diodes protect the reference inputs. To keep these diodes from turning on, make sure the voltages on the reference pins do not go below AGND by more than 0.4V, and likewise do not exceed AVDD by 0.4V.

If these conditions are possible, external Schottky clamp diodes or series resistors may be required to limit the input current to safe levels (see Absolute Maximum Ratings table).

Note that the valid operating range of the reference inputs is limited to the following:

–0.1V ≤ VREFN ≤ 0.1V

VREFN + 0.5V ≤ VREFP ≤ VREFN + 3.1V

A high-quality reference voltage with the appropriate drive strength is essential for achieving the best performance from the ADS1174/78. Noise and drift on the reference degrade overall system performance. See the *Application Information* section for example reference circuits.

CLOCK INPUT (CLK)

The ADS1174/78 requires a clock input for operation. Each ADS1174/78 converter operates from the same clock input. At the maximum data rate, the clock input can be either 27MHz or 13.5MHz (5.4MHz, low-power mode), determined by the setting of the CLKDIV input. The selection of the external clock frequency (f_{CLK}) does not affect the resolution (the oversampling ratio, OSR, remains fixed) or power dissipation of the ADS1174/78. However, a slower f_{CLK} can reduce the power consumption of an external clock driver. The output data rate scales with clock frequency, down to a minimum clock frequency of f_{CLK} = 100kHz. Table 4 summarizes the ratio of clock input frequency (f_{CLK}) to data rate (f_{DATA}), maximum data rate and corresponding maximum clock input for the two operating modes.

Table 4. Clock Input Options

MODE SELECTION	f_{CLK} (MHz)	CLKDIV	f_{CLK}/f_{DATA}	DATA RATE (SPS)
High-Speed	27	1	512	52,734
	13.5	0	256	
Low-Power	27	1	2,560	10,547
	5.4	0	512	

As with any high-speed data converter, a high-quality, low-jitter clock is essential for optimum performance. Crystal clock oscillators are the recommended clock source. Make sure to avoid excess ringing on the clock input; keeping the clock trace as short as possible using a 50Ω series resistor, placed close to the source end, often helps.

Copyright © 2007–2008, Texas Instruments Incorporated

MODE SELECTION (MODE)

The ADS1174/78 supports two modes of operation: High-Speed and Low-Power. These modes offer optimization of speed and power. The mode selection is determined by the status of the digital input MODE pins, as shown in Table 5. The ADS1174/78 constantly monitors the status of the MODE pin during operation.

Table 5. Mode Selection

MODE	MODE SELECTION	MAX f_{DATA} (1)
0	High-Speed	52,734
1	Low-Power	10,547

(1) f_{CLK} = 27MHz (CLKDIV = 1).

When using the SPI protocol, $\overline{DRDY}$ is held high after a mode change occurs until settled (or valid) data are ready, as shown in Figure 12 and Table 6.

In Frame-Sync protocol, the DOUT pins are held low after a mode change occurs until settled data are ready, as shown in Figure 12 and Table 6. Data can be read from the device to detect when DOUT changes to logic 1, indicating valid data.

SYNCHRONIZATION ($\overline{SYNC}$)

The ADS1174/78 can be synchronized by pulsing the $\overline{SYNC}$ pin low and then returning the pin high. When the pin goes low, the conversion process stops, and the internal counters used by the digital filter are reset. When the $\overline{SYNC}$ pin returns high, the conversion process restarts. Synchronization allows the conversion to be aligned with an external event, such as a reference timing pulse.

Since the converters of the ADS1174/78 operate in parallel from the same master clock and use the same $\overline{SYNC}$ input control, they are, by default, in synchronization with each other. However, the synchronization of multiple ADS1174/78s is somewhat different. At device power-on, variations in internal reset thresholds from device to device may result in uncertainty in conversion timing.

The $\overline{SYNC}$ pin can be used to synchronize multiple ADS1174/78s to within the same CLK cycle. Figure 13 illustrates the timing requirement of $\overline{SYNC}$ and CLK in SPI format.

See Figure 14 for the Frame-Sync format timing requirement.

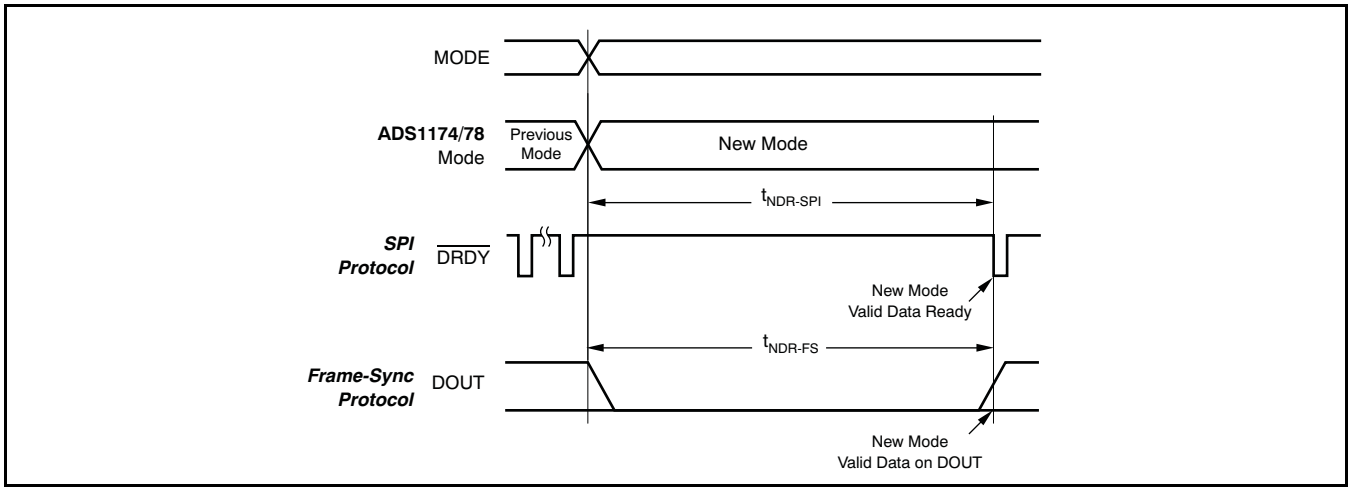

Figure 12. Mode Change Timing

Table 6. Mode Change

SYMBOL	DESCRIPTION	MIN	TYP	MAX	UNITS
$t_{NDR-SPI}$	Time for new data to be ready (SPI)			129	Conversions ($1/f_{DATA}$)
t_{NDR-FS}	Time for new data to be ready (Frame-Sync)	127		128	Conversions ($1/f_{DATA}$)

Copyright © 2007–2008, Texas Instruments Incorporated

After synchronization, indication of valid data depends on the whether SPI or Frame-Sync format is used.

In the SPI format, $\overline{\text{DRDY}}$ goes high as soon as $\overline{\text{SYNC}}$ is taken low; see Figure 13. After $\overline{\text{SYNC}}$ is returned high, $\overline{\text{DRDY}}$ stays high while the digital filter is settling. Once valid data are ready for retrieval, $\overline{\text{DRDY}}$ goes low.

In the Frame-Sync format, DOUT goes low as soon as $\overline{\text{SYNC}}$ is taken low; see Figure 14. After $\overline{\text{SYNC}}$ is returned high, DOUT stays low while the digital filter is settling. Once valid data are ready for retrieval, DOUT begins to output valid data. For proper synchronization, FSYNC, SCLK, and CLK must be established before taking $\overline{\text{SYNC}}$ high, and must then remain running.

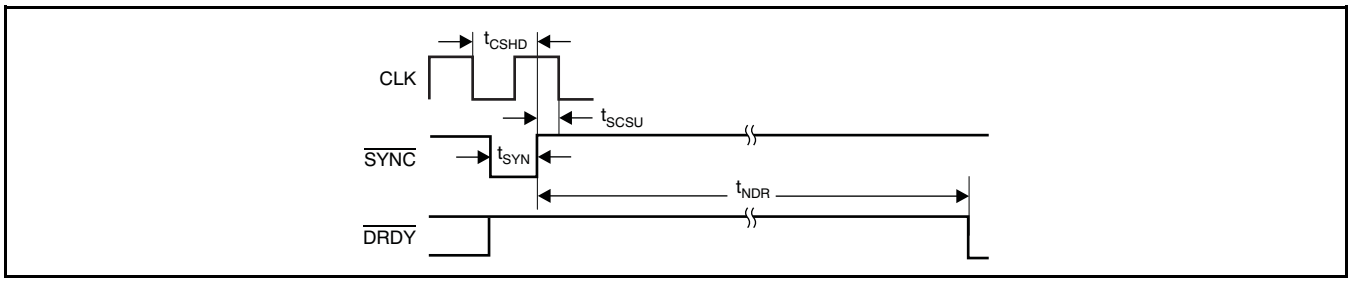

Figure 13. Synchronization Timing for SPI Protocol

Table 7. SPI Protocol

SYMBOL	DESCRIPTION	MIN	TYP	MAX	UNITS
t_{CSHD}	CLK to $\overline{\text{SYNC}}$ hold time (to not latch on CLK edge)	10			ns
t_{SCSU}	$\overline{\text{SYNC}}$ to CLK setup time (to latch on CLK edge)	5			ns
t_{SYN}	Synchronize pulse width	1			CLK periods
t_{NDR}	Time for new data to be ready			129	Conversions ($1/f_{DATA}$)

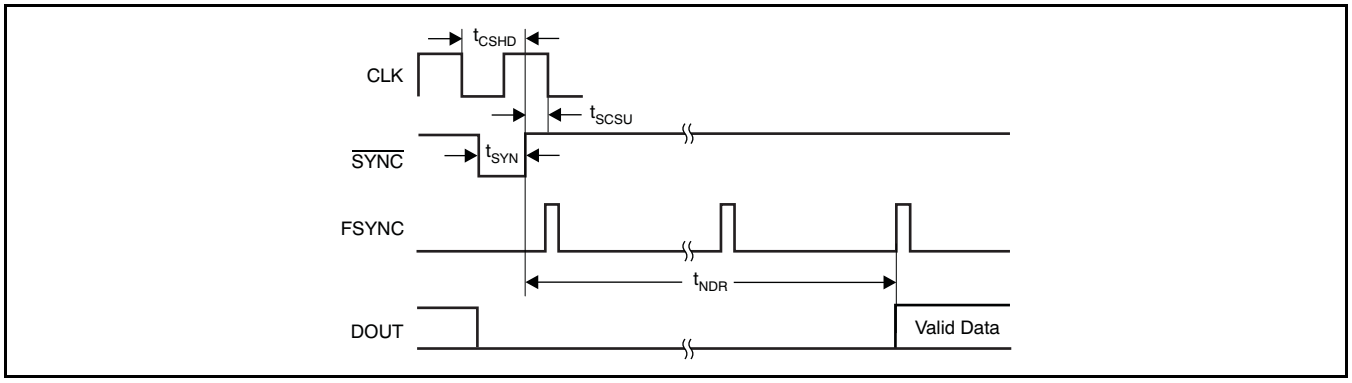

Figure 14. Synchronization Timing for Frame-Sync Protocol

Table 8. Frame-Sync Protocol

SYMBOL	DESCRIPTION	MIN	TYP	MAX	UNITS
t_{CSHD}	CLK to $\overline{\text{SYNC}}$ hold time (to not latch on CLK edge)	10			ns
t_{SCSU}	$\overline{\text{SYNC}}$ to CLK setup time (to latch on CLK edge)	5			ns
t_{SYN}	Synchronize pulse width	1			CLK periods
t_{NDR}	Time for new data to be ready	127		128	Conversions ($1/f_{DATA}$)

Copyright © 2007–2008, Texas Instruments Incorporated

POWER-DOWN ($\overline{\text{PWDN}}$)

The ADS1174/78 measurement channels can be independently powered down by use of the $\overline{\text{PWDN}}$ inputs. To enter the power-down mode, hold the respective $\overline{\text{PWDN}}$ pin low for at least two f_{CLK} cycles. To exit power-down, return the corresponding $\overline{\text{PWDN}}$ pin high. Note that when all channels are powered down, the ADS1174/78 enters a microwatt (µW) power state where all internal biasing is powered down. In this event, the TEST[1:0] input pins must be driven; all other input pins can float (the ADS1174/78 outputs remain driven).

As shown in Figure 15 and Table 9, a maximum of 130 conversion cycles (SPI interface) or 129 conversion cycles (Frame-Sync interface) must elapse before reading data after exiting power-down. Data from channels already running are not affected. The user software can perform the required delay time in the following ways:

1. Count the number of data conversions after taking the $\overline{\text{PWDN}}$ pin high.
2. Wait for $130/f_{DATA}$ (SPI) or $129/f_{DATA}$ (Frame-Sync) after taking the $\overline{\text{PWDN}}$ pins high.
3. Detect for non-zero data in the powered-up channel.

After powering up one or more channels, the channels are synchronized to each other. It is not necessary to use the $\overline{\text{SYNC}}$ pin to synchronize them.

When a channel is powered down in TDM data format, the data for the powered-down channel are either forced to zero (fixed-position TDM data mode) or replaced by shifting the data from the next channel into the vacated data position (dynamic-position TDM data mode).

In discrete data format, the data are always forced to zero. When powering-up a channel in dynamic-position TDM data format mode, the channel data remain packed until the data are ready, at which time the data frame is expanded to include the just-powered channel data. See the *Data Format* section for details.

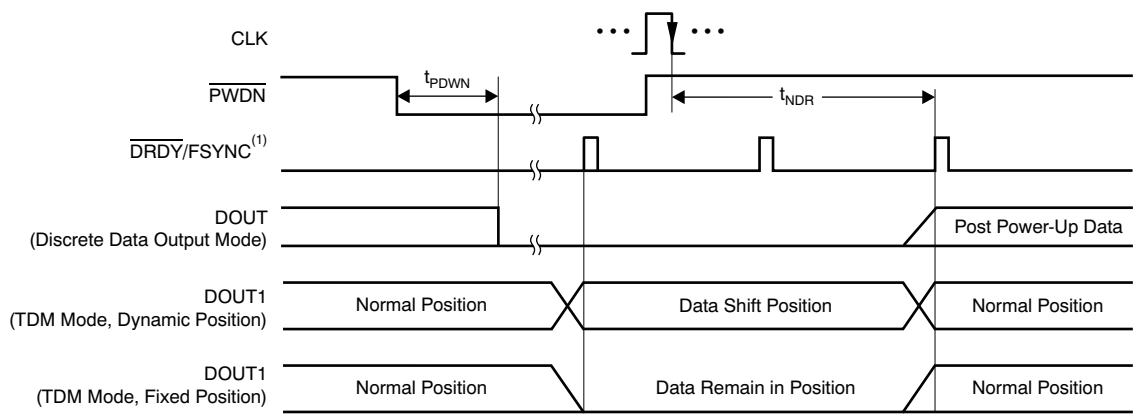

NOTE: (1) In SPI protocol, the timing occurs on the falling edge of $\overline{\text{DRDY}}$/FSYNC. Powering down all channels forces $\overline{\text{DRDY}}$/FSYNC high.

Figure 15. Power-Down Timing

Table 9. Power-Down Timing

SYMBOL	DESCRIPTION	MIN	TYP	MAX	UNITS
t_{PDWN}	$\overline{\text{PDWN}}$ pulse width to enter Power-Down mode	2			CLK periods
t_{NDR}	Time for new data to be ready (SPI)	129		130	Conversions ($1/f_{DATA}$)
	Time for new data to be ready (Frame-Sync)	128		129	Conversions ($1/f_{DATA}$)

Copyright © 2007–2008, Texas Instruments Incorporated

FORMAT[2:0]

Data can be read from the ADS1174/78 with two serial interface protocols (SPI or Frame-Sync) and several options of data formats (TDM/Discrete and Fixed/Dynamic data positions). The FORMAT[2:0] inputs are used to select among the options. Table 10 lists the available options. See the DOUT Modes section for details of the DOUT modes and data positions.

Table 10. Data Output Format

FORMAT[2:0]	INTERFACE PROTOCOL	DOUT MODE	DATA POSITION
000	SPI	TDM	Dynamic
001	SPI	TDM	Fixed
010	SPI	Discrete	—
011	Frame-Sync	TDM	Dynamic
100	Frame-Sync	TDM	Fixed
101	Frame-Sync	Discrete	—

DATA FORMAT

The ADS1174/78 outputs 16 bits of data in two's complement format.

A positive full-scale input produces an ideal output code of 7FFFh, and the negative full-scale input produces an ideal output code of 8000h. The output clips at these codes for signals exceeding full-scale. Table 11 summarizes the ideal output codes for different input signals.

Table 11. Ideal Output Code versus Input Signal

INPUT SIGNAL V_{IN} (AINP – AINN)	IDEAL OUTPUT CODE(1)
$\geq +V_{REF}$	7FFFh
$\frac{+V_{REF}}{2^{15}-1}$	0001h
0	0000h
$\frac{-V_{REF}}{2^{15}-1}$	FFFFh
$\leq -V_{REF}\left(\frac{2^{15}}{2^{15}-1}\right)$	8000h

(1) Excludes effects of noise, INL, offset, and gain errors.

SERIAL INTERFACE PROTOCOLS

Data are retrieved from the ADS1174/78 using the serial interface. Two protocols are available: SPI and Frame-Sync. The same pins are used for both interfaces: SCLK, $\overline{\text{DRDY}}$/FSYNC, DOUT[4:1] (or DOUT[8:1] for the ADS1178), and DIN. The FORMAT[2:0] pins select the desired interface protocol.

SPI SERIAL INTERFACE

The SPI-compatible format is a simple read-only interface. Data ready for retrieval are indicated by the falling $\overline{\text{DRDY}}$ output and are shifted out on the falling edge of SCLK, MSB first. The interface can be daisy-chained using the DIN input when using multiple ADS1174/78s. See the *Daisy-Chaining* section for more information.

SCLK

The serial clock (SCLK) features a Schmitt-triggered input and shifts out data on DOUT on the falling edge. It also shifts in data on the falling edge on DIN when this pin is being used for daisy-chaining. The device shifts data out on the falling edge and the user typically shifts this data in on the rising edge. Even though the SCLK input has hysteresis, it is recommended to keep SCLK as clean as possible to prevent glitches from accidentally shifting the data. SCLK may be run as fast as the CLK frequency. SCLK may be either in free-running or stop-clock operation between conversions. For best performance, use f_{SCLK}/f_{CLK} ratios of 1, 1/2, 1/4, 1/8, etc. **NOTE:** One CLK period is required after DRDY falls, to start shifting data (see *Timing Requirements: SPI Format*).

$\overline{\text{DRDY}}$/FSYNC (SPI Format)

In the SPI format, this pin functions as the $\overline{\text{DRDY}}$ output. It goes low when data are ready for retrieval and then returns high on the falling edge of the first subsequent SCLK. If data are not retrieved (that is, SCLK is held low), $\overline{\text{DRDY}}$ pulses high just before the next conversion data are ready, as shown in Figure 16. The new data are loaded within one CLK cycle before $\overline{\text{DRDY}}$ goes low. All data must be shifted out before this time to avoid being overwritten.

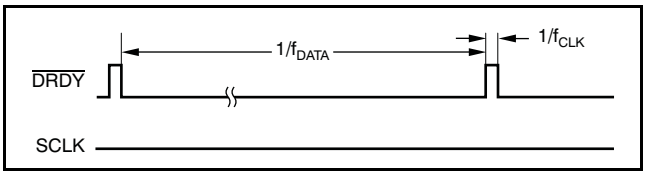

Figure 16. $\overline{\text{DRDY}}$ Timing with No Readback

DOUT

In Discrete Data Output mode, the conversion data are output on the individual DOUT pins (DOUT1, DOUT2, etc.), whereas in TDM mode, data are output only on DOUT1. The MSB data are valid on DOUT[4:1]/[8:1] when $\overline{\text{DRDY}}$ goes low. The subsequent bits are shifted out with each falling edge of SCLK. If daisy-chaining (TDM mode), the data shifted in using DIN appear on DOUT1 after all channel data have been shifted out.

DIN

This input is used when multiple ADS1174/78s are to be daisy-chained together. The DOUT1 pin of the first device connects to the DIN pin of the next, etc. It can be used with either the SPI or Frame-Sync formats. Data are shifted in on the falling edge of SCLK. When using only one ADS1174/78, tie DIN low. See the *Daisy-Chaining* section for more information.

FRAME-SYNC SERIAL INTERFACE

Frame-Sync format is similar to the interface often used on audio ADCs. It operates in slave fashion—the user must supply framing signal FSYNC (similar to the *left/right clock* on stereo audio ADCs) and the serial clock SCLK (similar to the *bit clock* on audio ADCs). The data is output MSB first or *left-justified*. When using Frame-Sync format, the FSYNC and SCLK inputs must be continuously running with the required relationships shown in the Frame-Sync Timing Requirements.

SCLK

The serial clock (SCLK) features a Schmitt-triggered input and shifts out data on DOUT on the falling edge. It also shifts in data on the falling edge on DIN when this pin is being used for daisy-chaining. Even though SCLK has hysteresis, it is recommended to keep SCLK as clean as possible to prevent glitches from accidentally shifting the data. When using Frame-Sync format, SCLK must run continuously; if SCLK is disabled or interrupted, the data readback will be corrupted. The number of SCLKs within a frame period (FSYNC clock) can be any power of two ratio of clock cycles (1, 1/2, 1/4, etc.), as long as the number of cycles is sufficient to shift the data output from all channels within one data frame.

$\overline{\text{DRDY}}$/FSYNC (Frame-Sync Format)

In Frame-Sync format, this pin is used as the FSYNC input. The frame-sync input (FSYNC) sets the frame period which must be same as the data rate. The required number of f_{CLK} cycles to each FSYNC period depends on the mode selection and the CLKDIN input. Table 4 indicates the number of CLK cycles to each frame (f_{CLK}/f_{DATA}). If the FSYNC period is not the proper value, data readback is corrupted.

DOUT

In Discrete Data Output mode, the conversion data are shifted out on the individual DOUT pins (DOUT1, DOUT2, etc.), whereas in TDM mode, data are output only on DOUT1. The MSB data become valid on DOUT[4:1]/[8:1] on the SCLK rising edge prior to FSYNC going high. The subsequent bits are shifted out with each falling edge of SCLK. If daisy-chaining (TDM mode), the data shifted in using DIN appear on DOUT1 after all channel data have been shifted out (that is, 4 channels × 16 bits per channel = 64 bits for the ADS1174, and 8 channels × 16 bits per channel = 128 bits for the ADS1178).

DIN

This input is used when multiple ADS1174/78s are to be daisy-chained together. It can be used with either SPI or Frame-Sync formats. Data are shifted in on the falling edge of SCLK. When using only one ADS1174/78, tie DIN low. See the *Daisy-Chaining* section for more information.

Copyright © 2007–2008, Texas Instruments Incorporated

DOUT MODES

For both SPI and Frame-Sync interface protocols, either the data are shifted out through individual channel DOUT pins in a parallel data format (Discrete mode), or the data for all channels are shifted out in series through common pin DOUT1 (TDM mode).

TDM Mode

In time division multiplexed (TDM) data output mode, the data for all channels are shifted out, in series, on a single pin (DOUT1). As shown in Figure 17, the data from channel 1 are shifted out first, followed by channel 2 data, etc. After the data from the last channel are shifted out (channel 4 for the ADS1174 or channel 8 for the ADS1178), the data from the DIN input follow. DIN is used to daisy-chain the data output from another ADS1174, ADS1178, or other compatible device. Note that when all channels of the ADS1174/78 are powered down, the interface is powered down, rendering the DIN input powered down as well. When one or more channels of the device are powered down, the data format of the TDM mode can be fixed or dynamic.

TDM Mode, Fixed-Position Data

In this TDM data output mode, the data position of the channels remains fixed, regardless of whether channels are disabled. If a channel is powered down, data are forced to zero, but occupy the same position within the data stream. Figure 18 shows the data stream with channel 1 and channel 3 powered down.

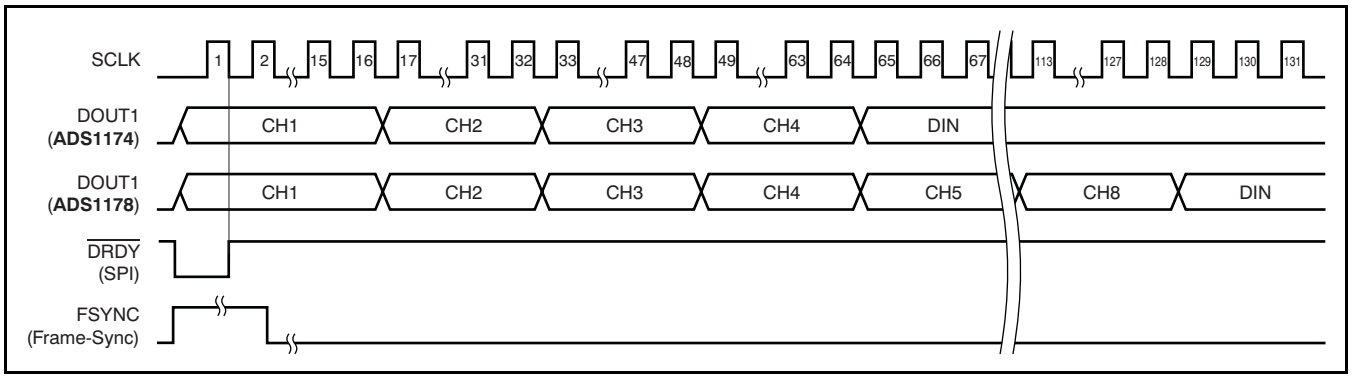

Figure 17. TDM Mode (All Channels Enabled)

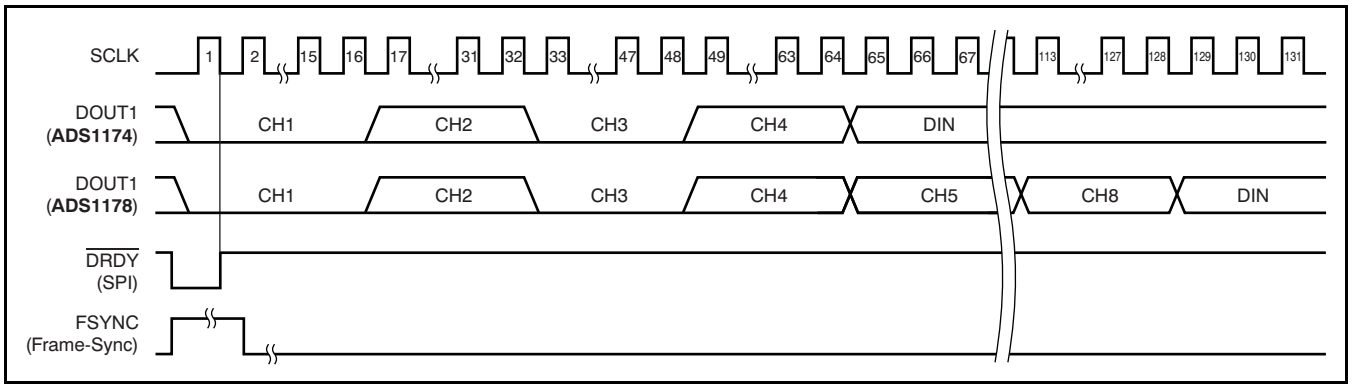

Figure 18. TDM Mode, Fixed-Position Data (Channels 1 and 3 Shown Powered Down)

Copyright © 2007–2008, Texas Instruments Incorporated

TDM Mode, Dynamic Position Data

In this TDM data output mode, when a channel is powered down, the data from higher channels shift one position in the data stream to fill the vacated data slot. Figure 19 shows the data stream with channel 1 and channel 3 powered down.

Discrete Data Output Mode

In Discrete data output mode, the channel data are shifted out in parallel using individual channel data output pins DOUT[4:1] for the ADS1174, or DOUT[8:1] for the ADS1178. After the 16th SCLK, the channel data are forced to zero. The data are also forced to zero for powered-down channels. Figure 20 depicts the data format.

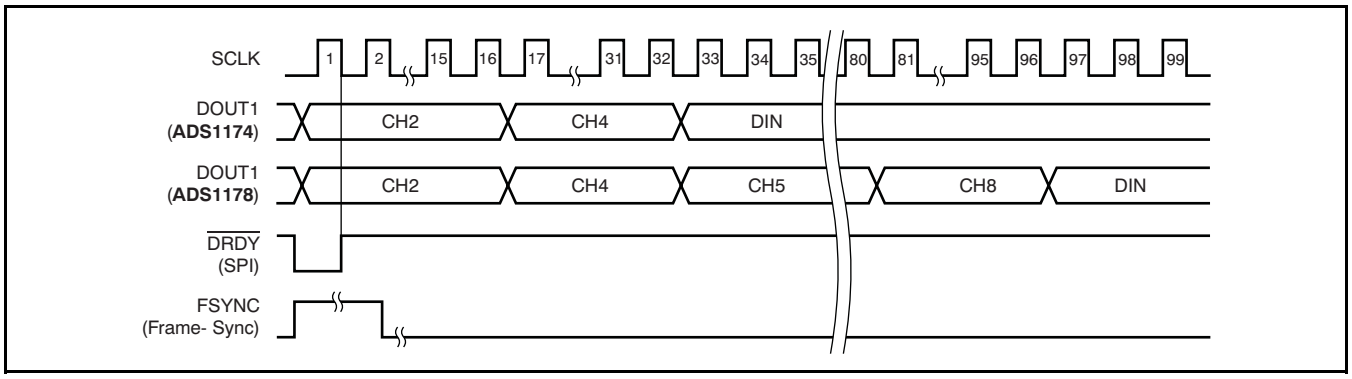

Figure 19. TDM Mode, Dynamic Position Data (Channels 1 and 3 Shown powered Down)

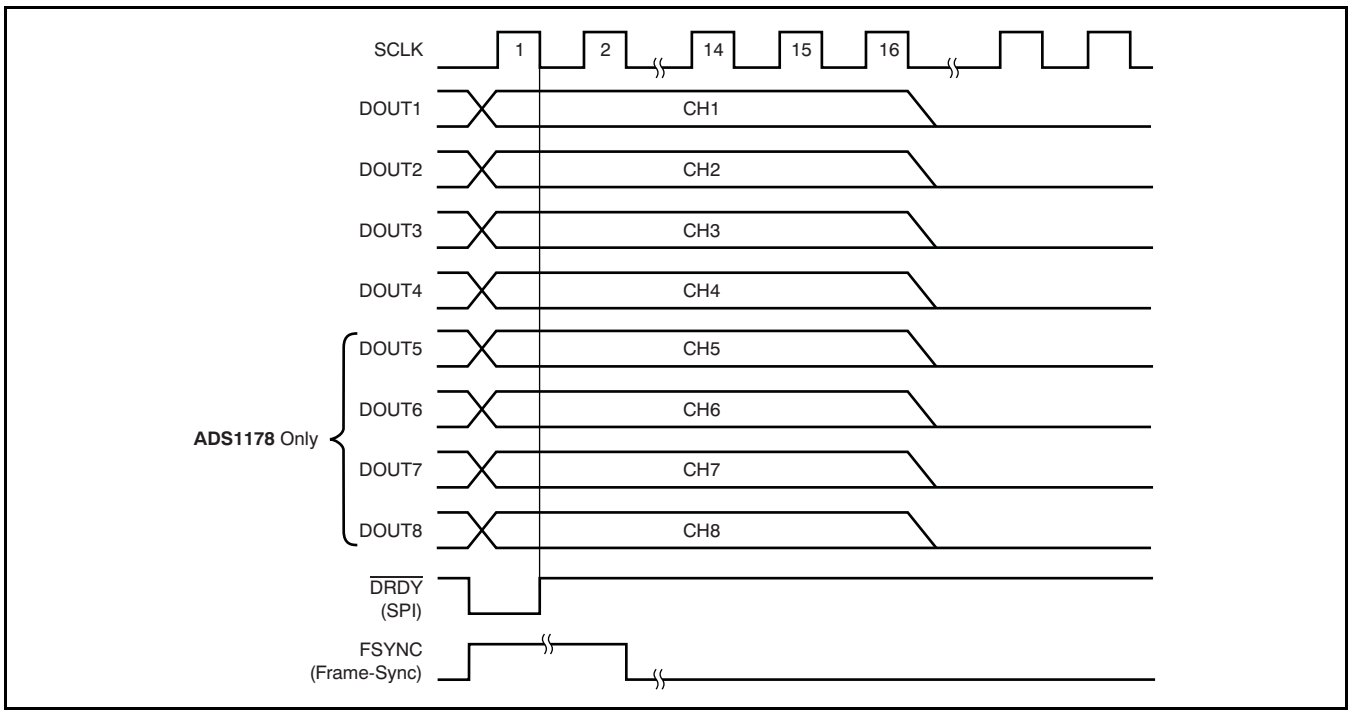

Figure 20. Discrete Data Output Mode

Copyright © 2007–2008, Texas Instruments Incorporated

DAISY-CHAINING

Multiple ADS1174/78s can be daisy-chained together to simplify the serial interface connections. The DOUT1 data output pin of one ADS1174/78 is connected to the DIN input of the next ADS1174/78. As Figure 21 illustrates, the DOUT1 pin of device 1 provides the output data to a controller, and the DIN input of device 2 is grounded. Figure 22 describes the data format when reading data back in a daisy-chain configuration.

The maximum number of channels that may be daisy-chained in this way is limited by the frequency of f_{SCLK}, the mode selection, and the CLKDIV input. The frequency of f_{SCLK} must be high enough to completely shift the data out from all channels within one f_{DATA} period. Table 12 lists the maximum number of daisy-chained channels when $f_{SCLK} = f_{CLK}$.

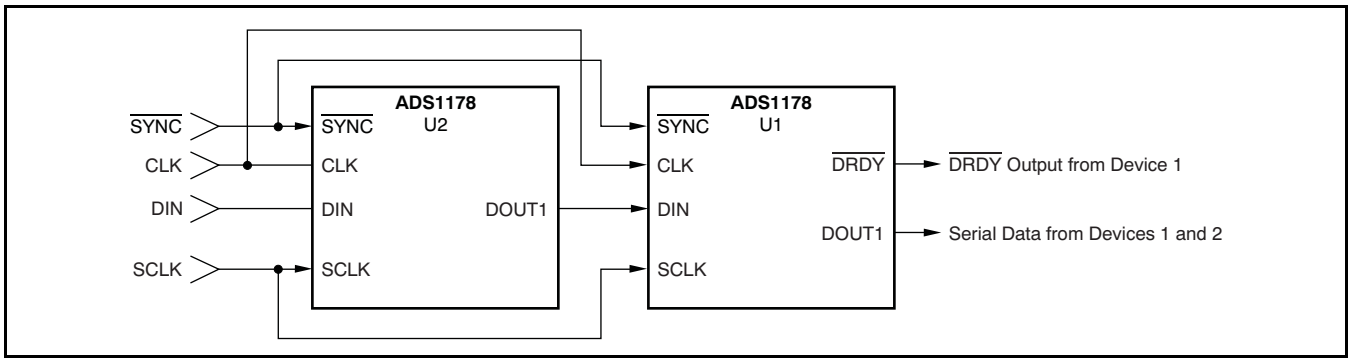

Figure 21. Daisy-Chaining of Two ADS1178s, SPI Protocol (FORMAT[2:0] = 000 or 001)

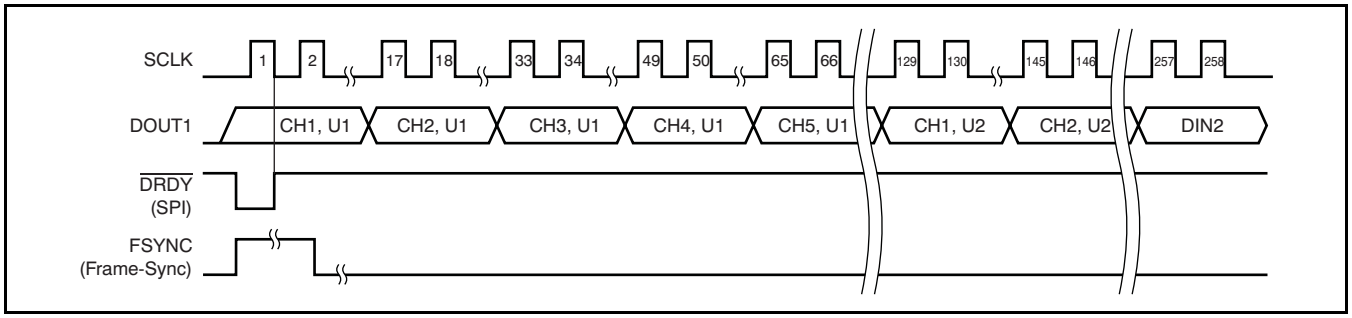

Figure 22. Daisy-Chain Data Format of Figure 21

Table 12. Maximum Channels in a Daisy-Chain ($f_{SCLK} = f_{CLK}$)

MODE SELECTION	CLKDIV	MAXIMUM NUMBER OF CHANNELS
High-Speed	1	32
	0	16
Low-Power	1	160
	0	32

Copyright © 2007–2008, Texas Instruments Incorporated

To increase the number of data channels possible in a chain, a segmented DOUT scheme may be used, producing two data streams. Figure 23 illustrates four ADS1178s, with a pair of ADS1178s daisy-chained together. The channel data of each daisy-chained pair are shifted out in parallel and are received by the processor through independent data channels.

Whether the interface protocol is SPI or Frame-Sync, it is recommended to synchronize all devices by tying the $\overline{\text{SYNC}}$ inputs together. When synchronized in SPI protocol, it is only necessary to monitor the $\overline{\text{DRDY}}$ output of one ADS1178.

In Frame-Sync interface protocol, the data from all devices are ready on the rising edge of FSYNC.

Since DOUT1 and DIN are both shifted on the falling edge of SCLK, the propagation delay on DOUT1 creates a setup time for DIN. Minimize the skew in SCLK to avoid timing violations.

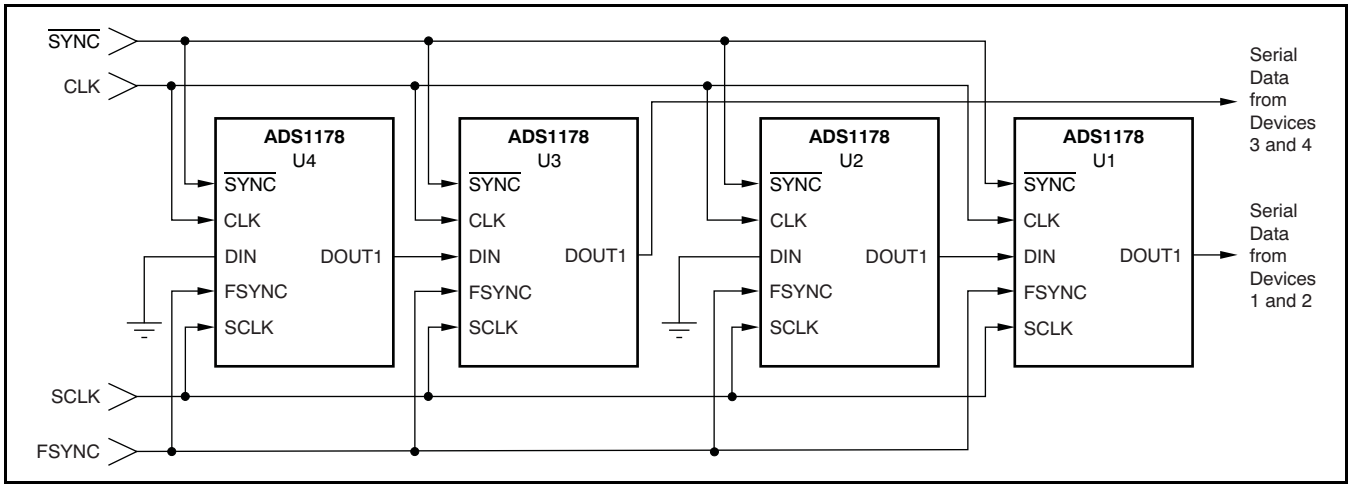

Figure 23. Segmented DOUT Daisy-Chain, Frame-Sync Protocol (FORMAT[2:0] = 011 or 100)

Copyright © 2007–2008, Texas Instruments Incorporated

POWER SUPPLIES

The ADS1174/78 has three power supplies: AVDD, DVDD, and IOVDD. AVDD is the analog supply that powers the modulator, DVDD is the digital supply that powers the digital core, and IOVDD is the digital I/O power supply. The IOVDD and DVDD power supplies can be tied together if desired (+1.8V). To achieve rated performance, it is critical that the power supplies are bypassed with 0.1µF and 10µF capacitors placed as close as possible to the supply pins. A single 10µF ceramic capacitor may be substituted in place of the two capacitors.

Figure 24 shows the start-up sequence of the ADS1174/78. At power-on, bring up the DVDD supply first, followed by IOVDD and then AVDD. Check the power-supply sequence for proper order, including the ramp rate of each supply. DVDD and IOVDD may be sequenced at the same time if the supplies are tied together. Each supply has an internal reset circuit whose outputs are summed together to generate a global power-on reset. After the supplies have exceeded the reset thresholds, 2^{18} f_{CLK} cycles are counted before the converter initiates the conversion process. Following the CLK cycles, the data for 129 conversions are suppressed by the ADS1174/78 to allow output of fully-settled data. In SPI protocol, $\overline{DRDY}$ is held high during this interval. In frame-sync protocol, DOUT is forced to zero. The power supplies should be applied before any analog or digital pin is driven. For consistent performance, assert $\overline{SYNC}$ after device power-on when data first appear.

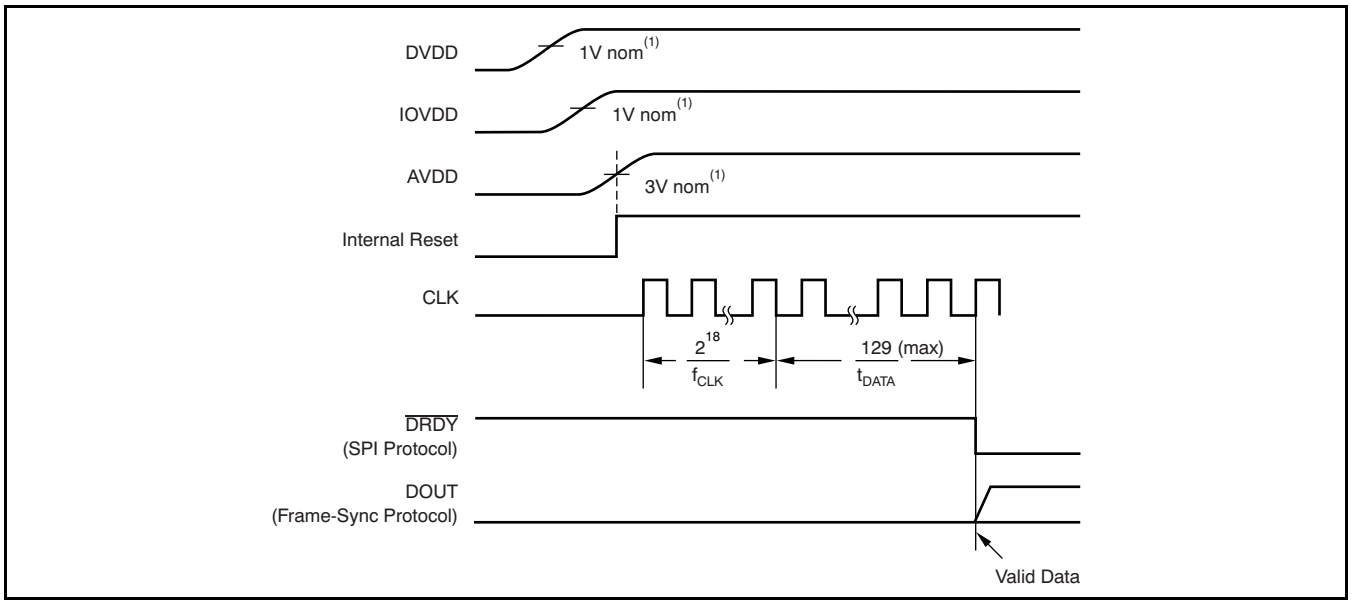

(1) The power-supply reset thresholds are approximate.

Figure 24. Start-Up Sequence

PIN TEST USING TEST[1:0] INPUTS

Test mode allows continuity testing of the digital I/O pins. In this mode, the normal functions of the digital pins are disabled and routed to each other as pairs through internal logic, as shown in Table 13. Note that some of the digital input pins become outputs; this configuration should be taken into account when using test mode.

Table 13. Test Mode Pin Map (TEST[1:0] = 11)

TEST MODE PIN MAP(1)	
INPUT PINS	**OUTPUT PINS**
$\overline{\text{PWDN1}}$	DOUT1
$\overline{\text{PWDN2}}$	DOUT2
$\overline{\text{PWDN3}}$	DOUT3
$\overline{\text{PWDN4}}$	DOUT4
$\overline{\text{PWDN5}}$ (2)	DOUT5(2)
$\overline{\text{PWDN6}}$ (2)	DOUT6(2)
$\overline{\text{PWDN7}}$ (2)	DOUT7(2)
$\overline{\text{PWDN8}}$ (2)	DOUT8(2)
MODE	DIN
FORMAT0	CLKDIV
FORMAT1	$\overline{\text{DRDY}}$/FSYNC
FORMAT2	SCLK

(1) The CLK input does not have a test output; $\overline{\text{SYNC}}$ = 1 and is an output.
(2) ADS1178 only.

The analog input, power supply, and ground pins remain connected as normal. The test mode is engaged by the setting the pins TEST[1:0] = 11. For normal converter operation, set TEST[1:0] = 00.

VCOM OUTPUT

The VCOM pin is an analog output of approximately AVDD/2. This voltage may be used to set the common-mode voltage of the input buffers. The drive capability of this output is limited; most cases require an external buffer to minimize loading. A 0.1µF capacitor to AGND is recommended to reduce noise pick-up.

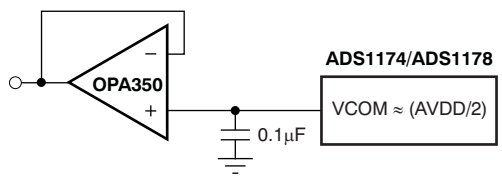

NOTE: Buffer is required if VCOM is used for any purpose.

Figure 25. VCOM Output

Copyright © 2007–2008, Texas Instruments Incorporated

APPLICATION INFORMATION

To obtain the specified performance from the ADS1174/78, the following layout and component guidelines should be considered.

1. **Power Supplies:** The device requires three power supplies for operation: DVDD, IOVDD, and AVDD. The range for DVDD is 1.65V to 1.95V; the range of IOVDD is 1.65V to 3.6V; and AVDD is restricted to 4.75V to 5.25V. For all supplies, use a 10µF tantalum capacitor, bypassed with a 0.1µF ceramic capacitor, placed close to the device pins. Alternatively, a single 10µF ceramic capacitor can be used. The supplies should be relatively free of noise and should not be shared with devices that produce voltage spikes (such as relays, LED display drivers, etc.). If a switching power-supply source is used, the voltage ripple should be low (< 2mV) and the switching frequency outside the passband of the converter.
2. **Ground Plane:** A single ground plane connecting both AGND and DGND pins can be used. If separate digital and analog grounds are used, connect the grounds together at the converter, or at the power entry point of the printed circuit board (PCB).
3. **Digital Inputs:** It is recommended to source-terminate the digital inputs to the device with 50Ω series resistors. The resistors should be placed close to the driving end of the digital source (oscillator, logic gates, DSP, etc.) This placement helps to reduce ringing on the digital lines, which may lead to degraded ADC performance.
4. **Analog/Digital Circuits:** Place analog circuitry (input buffer, reference) and associated tracks together, keeping them away from digital circuitry (DSP, microcontroller, logic). Avoid crossing digital tracks across analog tracks to reduce noise coupling and crosstalk.
5. **Reference Inputs:** It is recommended to use either a minimum 10µF tantalum with a 0.1µF ceramic capacitor, or a single 1µF ceramic capacitor, directly across the reference inputs, VREFP and VREFN. The reference input should be driven by a low-impedance source. For best performance, the reference should be low-noise.
6. **Analog Inputs:** The analog input pins must be driven differentially to achieve specified performance. A true differential driver or transformer (for ac applications) can be used for this purpose. Route the analog inputs tracks (AINP, AINN) as a pair from the buffer to the converter using short, direct tracks and away from digital tracks.

   A 1nF to 10nF capacitor should be used directly across the analog input pins, AINP and AINN. A low-k dielectric (such as COG or film type) should be used to maintain low THD. Capacitors from each analog input to ground can be used. They should be no larger than 1/10 the size of the difference capacitor (typically 100pF) to preserve the AC common-mode performance.
7. **Component Placement:** Place the power supply, analog input, and reference input bypass capacitors as close as possible to the device pins. This layout is particularly important for the small-value ceramic capacitors. Surface-mount components are recommended to avoid the higher inductance of leaded components.

Figure 26 to Figure 28 illustrate basic connections and interfaces that can be used with the ADS1174/78.

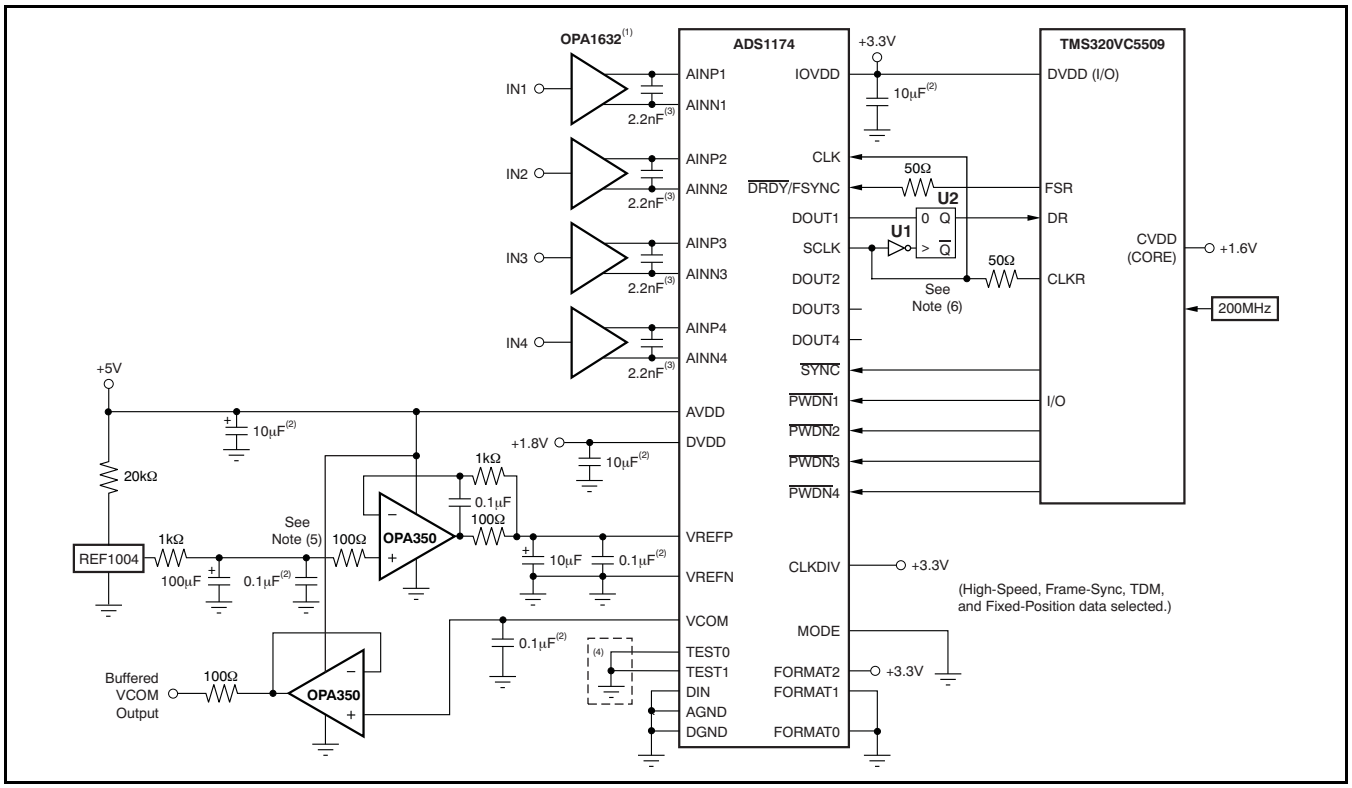

(1) External Schottky clamp diodes or series resistors may be needed to prevent overvoltage on the inputs. See the *Analog Inputs* section.

(2) Indicates ceramic capacitors.

(3) Indicates COG ceramic capacitors.

(4) For pin test mode, set to logic high.

(5) The op amp and input RC components filter the REF1004 noise.

(6) U1: SN74LVC1G04. U2: SN74LVC2G74. These components re-clock the ADS1174 data output to interface to the TMS320VC5509.

Figure 26. ADS1174 Basic Connection Circuit

Copyright © 2007–2008, Texas Instruments Incorporated

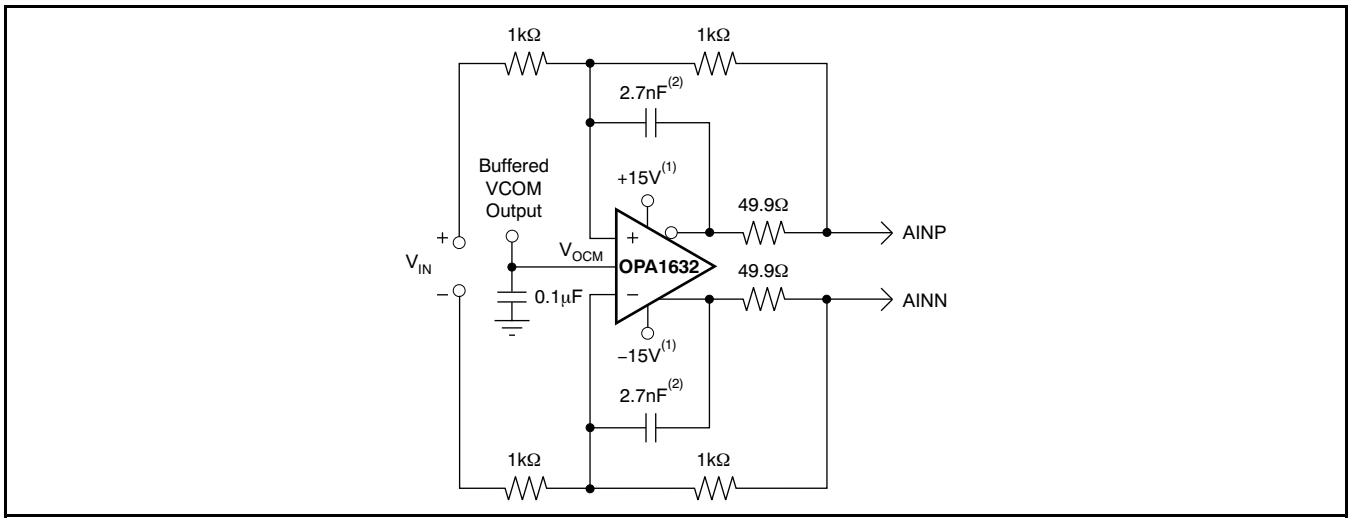

(1) Bypass with 10µF and 0.1µF capacitors.

(2) 15nF for Low-Speed mode.

Figure 27. Basic Differential Input Signal Interface

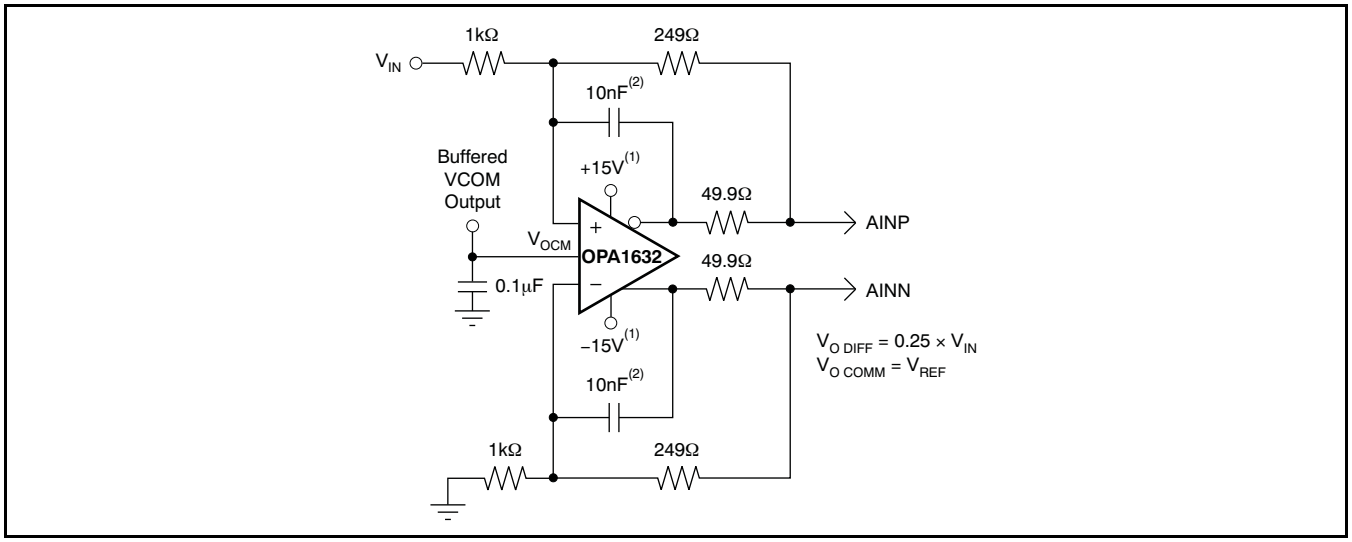

(1) Bypass with 10µF and 0.1µF capacitors.

(2) 56nF for Low-Speed mode.

Figure 28. Basic Single-Ended Input Signal Interface

PowerPAD THERMALLY-ENHANCED PACKAGING

The PowerPAD concept is implemented in standard epoxy resin package material. The integrated circuit is attached to the leadframe die pad using thermally conductive epoxy. The package is molded so that the leadframe die pad is exposed at a surface of the package. This exposure provides an extremely low thermal resistance to the path between the IC junction and the exterior case. The external surface of the leadframe die pad is located on the PCB side of the package, allowing the die pad to be attached to the PCB using standard flow soldering techniques. This soldering allows efficient attachment to the PCB and permits the board structure to be used as a heat-sink for the package. Using a thermal pad identical in size to the die pad and vias connected to the PCB ground plane, the board designer can now implement power packaging without additional thermal hardware (for example, external heat sinks) or the need for specialized assembly instructions.

Figure 29 illustrates a cross-section view of a PowerPAD package.

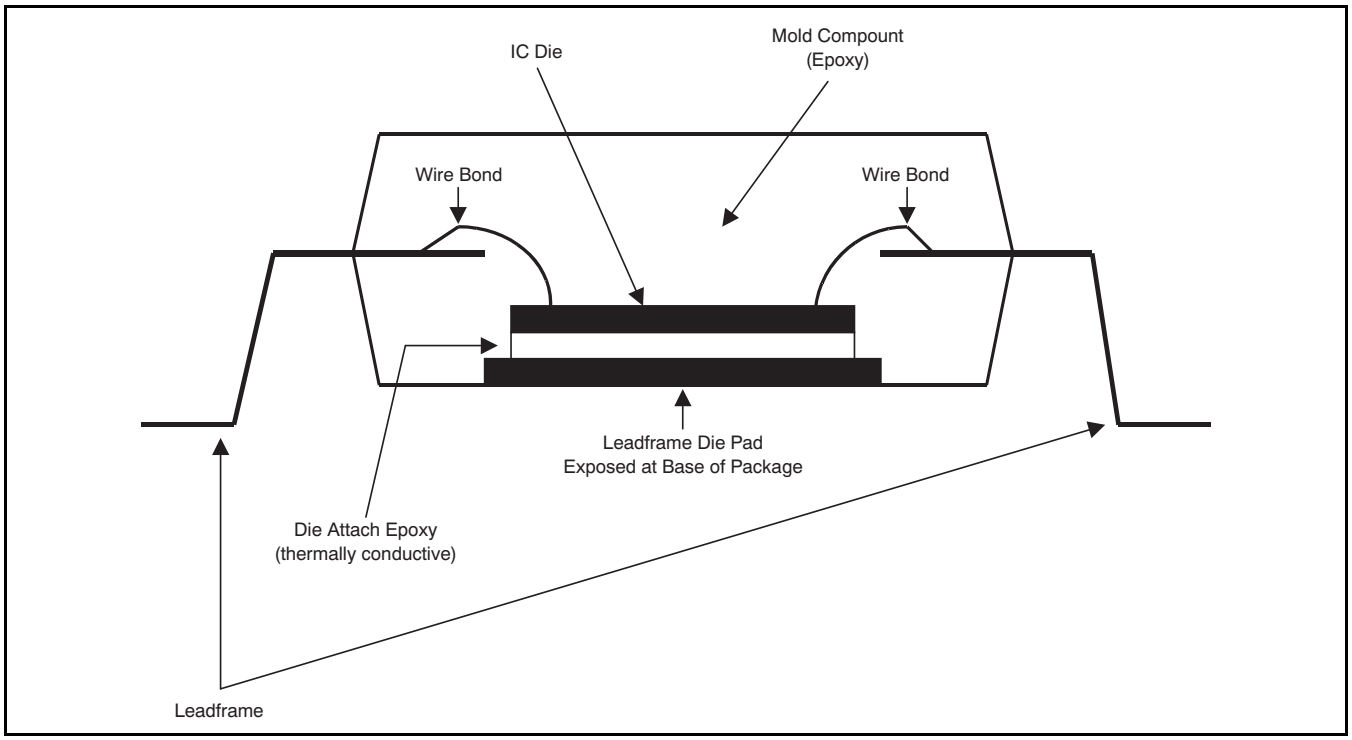

Figure 29. Cross-Section View of a PowerPAD Thermally-Enhanced Package

Copyright © 2007–2008, Texas Instruments Incorporated

PowerPAD PCB Layout Considerations for the ADS1174/78

Figure 30 shows the recommended layer structure for thermal management when using a PowerPad package on a 4-layer PCB design. Note that the thermal pad is placed on both the top and bottom sides of the board. The ground plane is used as the heat-sink, while the power plane is thermally isolated from the thermal vias.

Figure 31 shows the required thermal pad etch pattern for the 64-lead HTQFP package used for the ADS1174/78. Nine 13mil (0.33mm) thermal vias plated with one ounce of copper are placed within the thermal pad area for the purpose of connecting the pad to the ground plane layer. The ground plane is used as a heatsink in this application. It is very important that the thermal via diameter be no larger than 13mils in order to avoid solder wicking during the reflow process. Solder wicking results in thermal voids that reduce heat dissipation efficiency and hamper heat flow away from the IC die.

The via connections to the thermal pad and internal ground plane should be plated completely around the hole, as opposed to the typical web or spoke thermal relief connection. Plating entirely around the thermal via provides the most efficient thermal connection to the ground plane.

Additional PowerPAD Package Information

Texas Instruments publishes the PowerPAD Thermally-Enhanced Package Application Report (TI literature number SLMA002), available for download at www.ti.com, which provides a more detailed discussion of PowerPAD design and layout considerations. Before attempting a board layout with the ADS1174/78, it is recommended that the hardware engineer and/or layout designer be familiar with the information contained in this document.

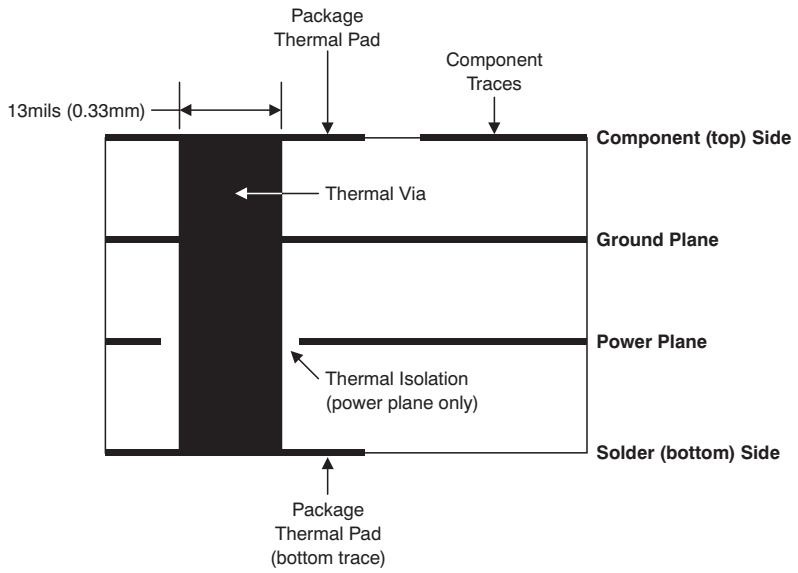

Figure 30. Recommended PCB Structure for a 4-Layer Board

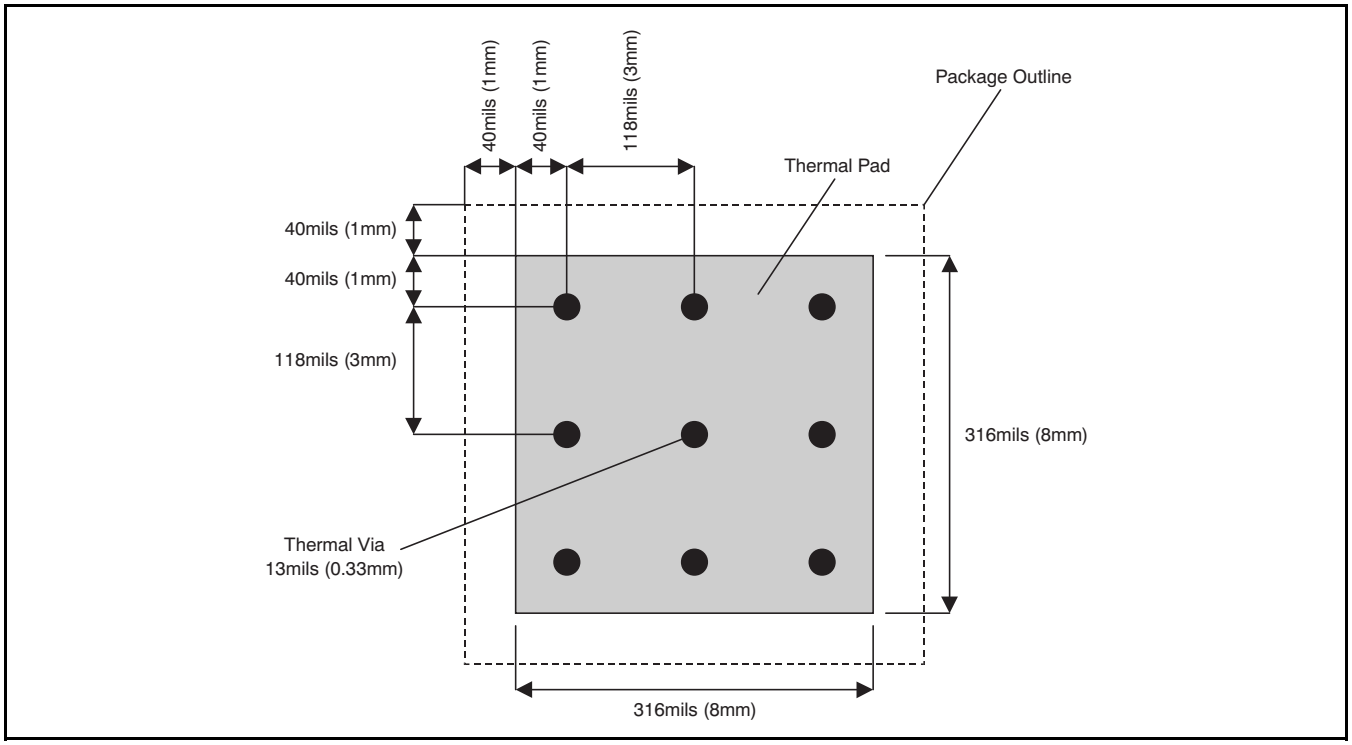

Figure 31. Thermal Pad Etch and Via Pattern for the 64-Lead HTQFP Package

Copyright © 2007–2008, Texas Instruments Incorporated

Revision History

Changes from Revision A (December 2007) to Revision B	Page
• Corrected typo in the *Absolute Maximum Ratings* table	2
• Corrected caption of Figure 21; FORMAT[2:0] = 000 or 001 (instead of 011 or 100)	21
• Corrected caption of Figure 23; FORMAT[2:0] = 011 or 100 (instead of 000 or 001)	22
• Revised the *Power Supplies* section	23
• Changed Figure 26 illustrating Frame-Sync connection to the DSP	26

Copyright © 2007–2008, Texas Instruments Incorporated

PACKAGING INFORMATION

Orderable Device	Status (1)	Package Type	Package Drawing	Pins	Package Qty	Eco Plan (2)	Lead finish/ Ball material (6)	MSL Peak Temp (3)	Op Temp (°C)	Device Marking (4/5)	Samples
ADS1174IPAPR	ACTIVE	HTQFP	PAP	64	1000	RoHS & Green	NIPDAU	Level-3-260C-168 HR	-40 to 85	ADS1174	Samples
ADS1174IPAPT	ACTIVE	HTQFP	PAP	64	250	RoHS & Green	NIPDAU	Level-3-260C-168 HR	-40 to 85	ADS1174	Samples
ADS1178IPAPR	ACTIVE	HTQFP	PAP	64	1000	RoHS & Green	NIPDAU	Level-3-260C-168 HR	-40 to 85	ADS1178	Samples
ADS1178IPAPT	ACTIVE	HTQFP	PAP	64	250	RoHS & Green	NIPDAU	Level-3-260C-168 HR	-40 to 85	ADS1178	Samples

(1) The marketing status values are defined as follows:
ACTIVE: Product device recommended for new designs.
LIFEBUY: TI has announced that the device will be discontinued, and a lifetime-buy period is in effect.
NRND: Not recommended for new designs. Device is in production to support existing customers, but TI does not recommend using this part in a new design.
PREVIEW: Device has been announced but is not in production. Samples may or may not be available.
OBSOLETE: TI has discontinued the production of the device.

(2) **RoHS:** TI defines "RoHS" to mean semiconductor products that are compliant with the current EU RoHS requirements for all 10 RoHS substances, including the requirement that RoHS substance do not exceed 0.1% by weight in homogeneous materials. Where designed to be soldered at high temperatures, "RoHS" products are suitable for use in specified lead-free processes. TI may reference these types of products as "Pb-Free".
RoHS Exempt: TI defines "RoHS Exempt" to mean products that contain lead but are compliant with EU RoHS pursuant to a specific EU RoHS exemption.
Green: TI defines "Green" to mean the content of Chlorine (Cl) and Bromine (Br) based flame retardants meet JS709B low halogen requirements of <=1000ppm threshold. Antimony trioxide based flame retardants must also meet the <=1000ppm threshold requirement.

(3) MSL, Peak Temp. - The Moisture Sensitivity Level rating according to the JEDEC industry standard classifications, and peak solder temperature.

(4) There may be additional marking, which relates to the logo, the lot trace code information, or the environmental category on the device.

(5) Multiple Device Markings will be inside parentheses. Only one Device Marking contained in parentheses and separated by a "~" will appear on a device. If a line is indented then it is a continuation of the previous line and the two combined represent the entire Device Marking for that device.

(6) Lead finish/Ball material - Orderable Devices may have multiple material finish options. Finish options are separated by a vertical ruled line. Lead finish/Ball material values may wrap to two lines if the finish value exceeds the maximum column width.

Important Information and Disclaimer: The information provided on this page represents TI's knowledge and belief as of the date that it is provided. TI bases its knowledge and belief on information provided by third parties, and makes no representation or warranty as to the accuracy of such information. Efforts are underway to better integrate information from third parties. TI has taken and

continues to take reasonable steps to provide representative and accurate information but may not have conducted destructive testing or chemical analysis on incoming materials and chemicals.
TI and TI suppliers consider certain information to be proprietary, and thus CAS numbers and other limited information may not be available for release.

In no event shall TI's liability arising out of such information exceed the total purchase price of the TI part(s) at issue in this document sold by TI to Customer on an annual basis.

TAPE AND REEL INFORMATION

REEL DIMENSIONS

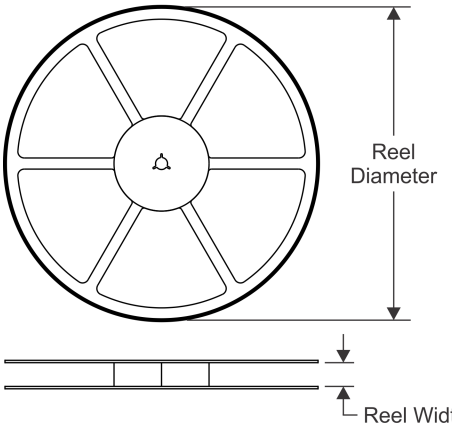

TAPE DIMENSIONS

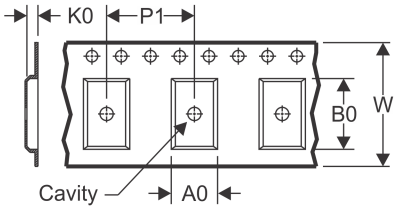

A0	Dimension designed to accommodate the component width
B0	Dimension designed to accommodate the component length
K0	Dimension designed to accommodate the component thickness
W	Overall width of the carrier tape
P1	Pitch between successive cavity centers

QUADRANT ASSIGNMENTS FOR PIN 1 ORIENTATION IN TAPE

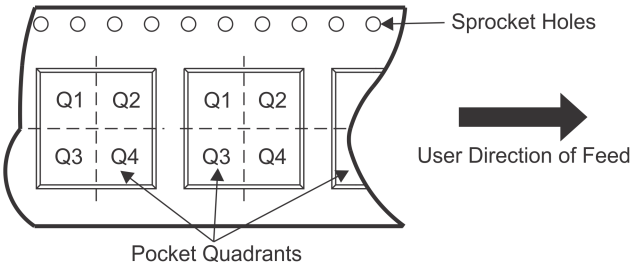

*All dimensions are nominal

Device	Package Type	Package Drawing	Pins	SPQ	Reel Diameter (mm)	Reel Width W1 (mm)	A0 (mm)	B0 (mm)	K0 (mm)	P1 (mm)	W (mm)	Pin1 Quadrant
ADS1174IPAPT	HTQFP	PAP	64	250	180.0	24.4	13.0	13.0	1.5	16.0	24.0	Q2

TAPE AND REEL BOX DIMENSIONS

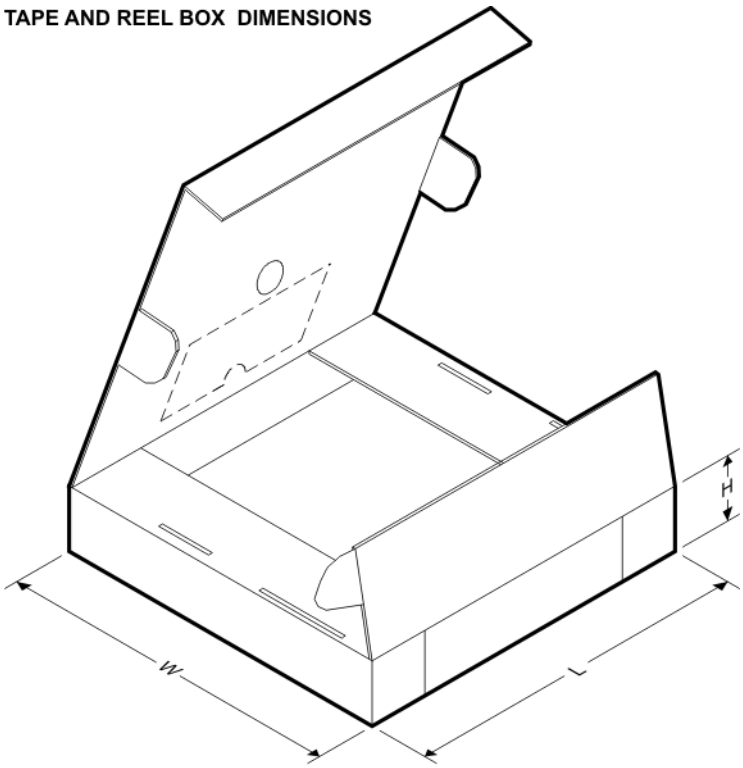

*All dimensions are nominal

Device	Package Type	Package Drawing	Pins	SPQ	Length (mm)	Width (mm)	Height (mm)
ADS1174IPAPT	HTQFP	PAP	64	250	213.0	191.0	55.0

GENERIC PACKAGE VIEW

PAP 64

HTQFP - 1.2 mm max height

10 x 10, 0.5 mm pitch

QUAD FLATPACK

This image is a representation of the package family, actual package may vary.
Refer to the product data sheet for package details.

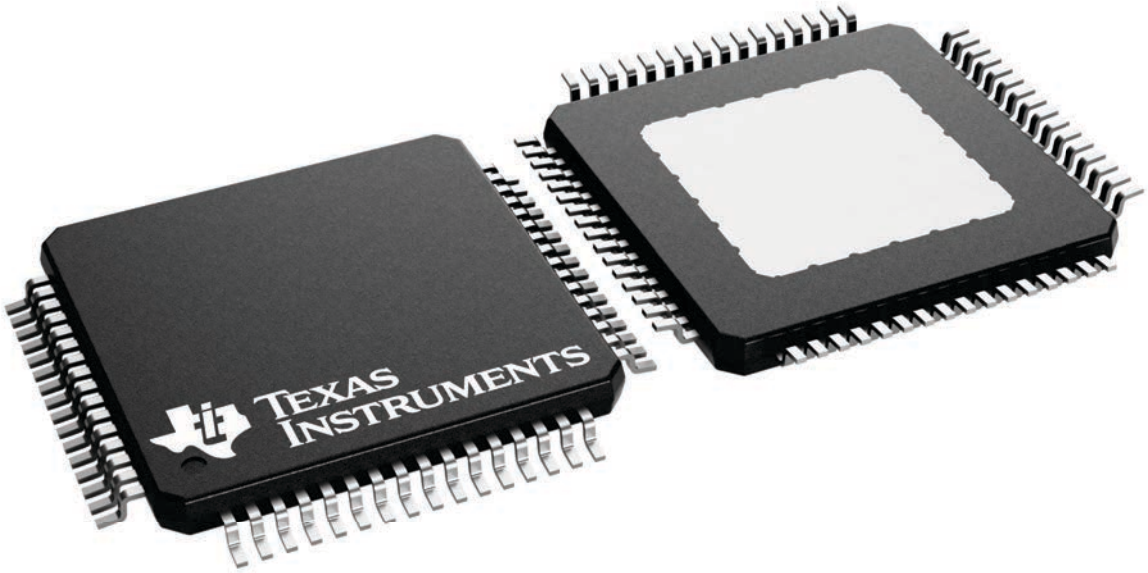

4226442/A

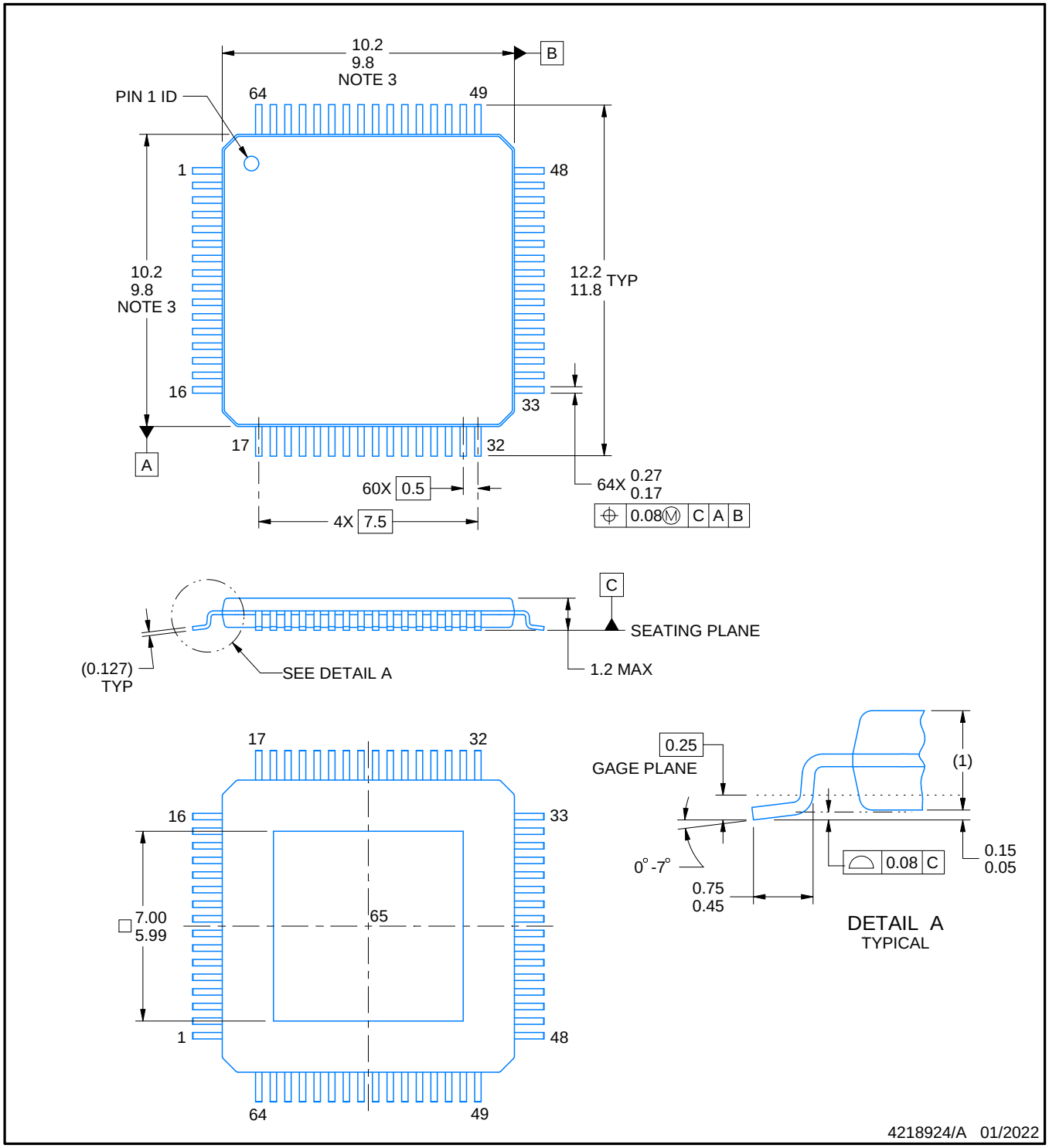

NOTES:

PowerPAD is a trademark of Texas Instruments.

1. All linear dimensions are in millimeters. Any dimensions in parenthesis are for reference only. Dimensioning and tolerancing per ASME Y14.5M.
2. This drawing is subject to change without notice.
3. This dimension does not include mold flash, protrusions, or gate burrs.
4. Strap features may not be present.
5. Reference JEDEC registration MS-026.

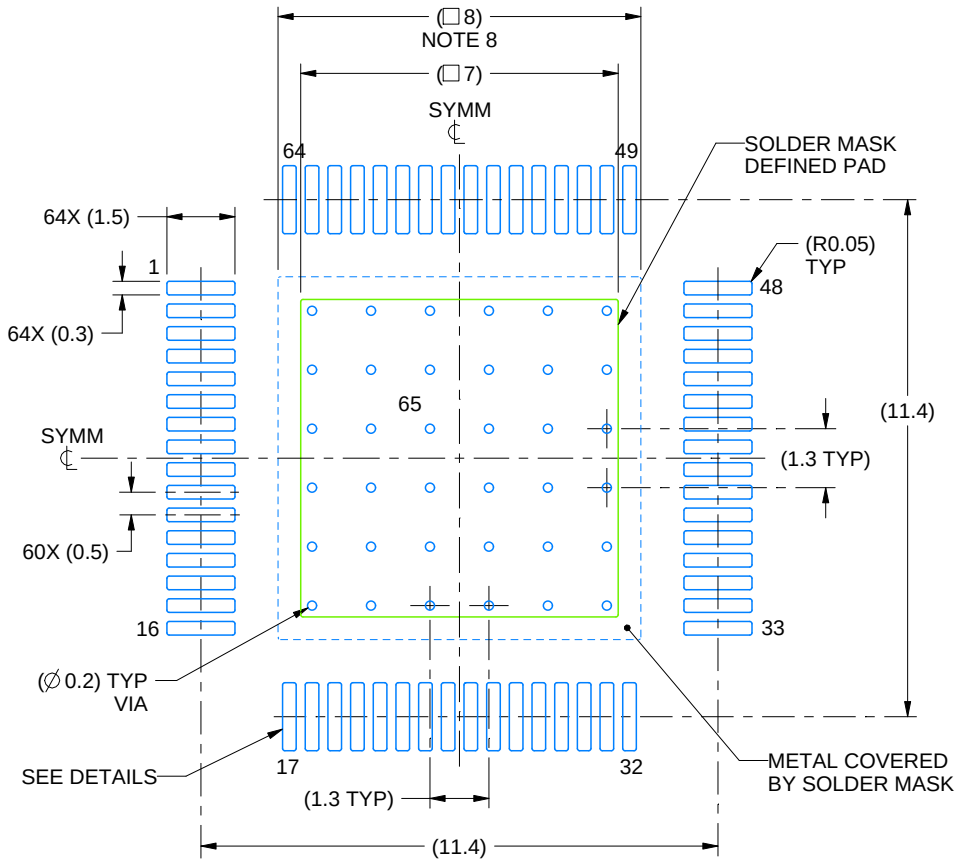

LAND PATTERN EXAMPLE
EXPOSED METAL SHOWN
SCALE:6X

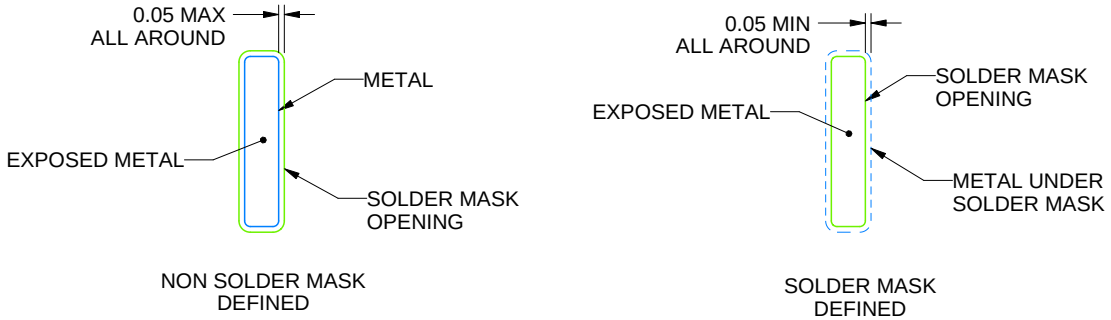

SOLDER MASK DETAILS

4218924/A 01/2022

NOTES: (continued)

6. Publication IPC-7351 may have alternate designs.
7. Solder mask tolerances between and around signal pads can vary based on board fabrication site.
8. This package is designed to be soldered to a thermal pad on the board. See technical brief, Powerpad thermally enhanced package, Texas Instruments Literature No. SLMA002 (www.ti.com/lit/slma002) and SLMA004 (www.ti.com/lit/slma004).
9. Vias are optional depending on application, refer to device data sheet. It is recommended that vias under paste be filled, plugged or tented.
10. Size of metal pad may vary due to creepage requirement.

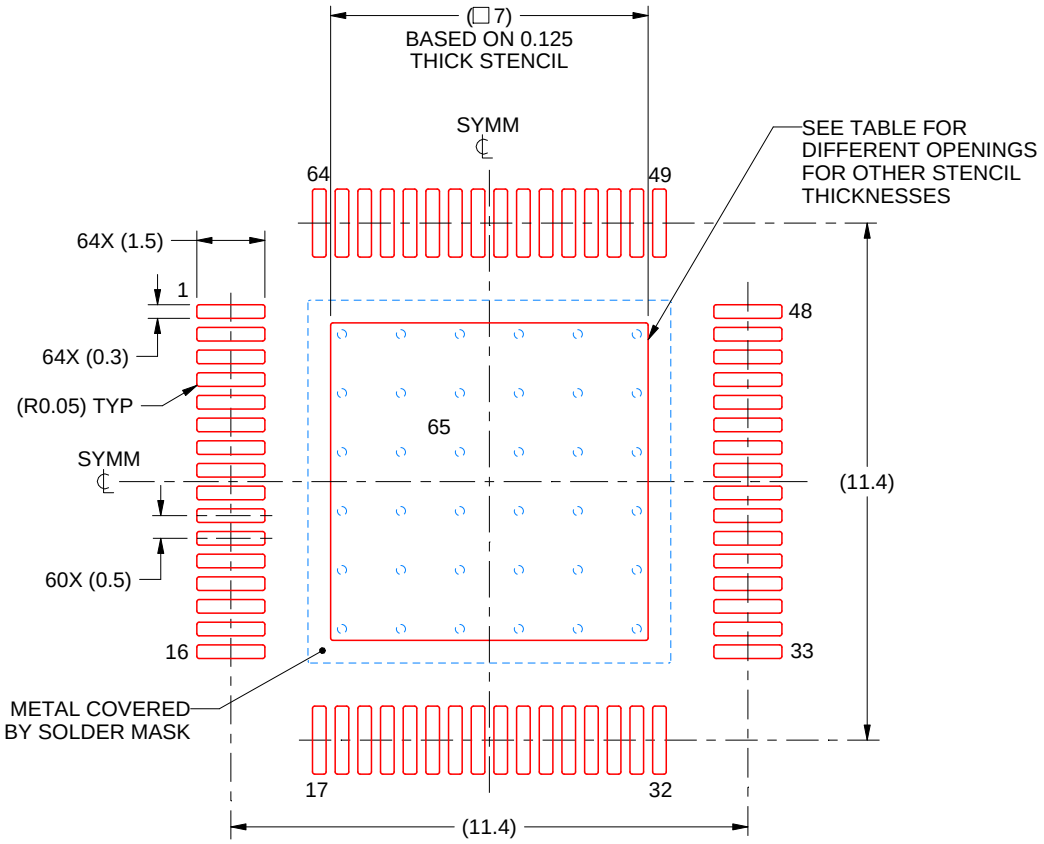

SOLDER PASTE EXAMPLE
EXPOSED PAD
100% PRINTED SOLDER COVERAGE BY AREA
SCALE:6X

STENCIL THICKNESS	SOLDER STENCIL OPENING
0.1	7.83 X 7.83
0.125	7.0 X 7.0 (SHOWN)
0.15	6.39 X 6.39
0.175	5.92 X 5.92

4218924/A 01/2022

NOTES: (continued)

11. Laser cutting apertures with trapezoidal walls and rounded corners may offer better paste release. IPC-7525 may have alternate design recommendations.
12. Board assembly site may have different recommendations for stencil design.

IMPORTANT NOTICE AND DISCLAIMER

TI PROVIDES TECHNICAL AND RELIABILITY DATA (INCLUDING DATA SHEETS), DESIGN RESOURCES (INCLUDING REFERENCE DESIGNS), APPLICATION OR OTHER DESIGN ADVICE, WEB TOOLS, SAFETY INFORMATION, AND OTHER RESOURCES “AS IS” AND WITH ALL FAULTS, AND DISCLAIMS ALL WARRANTIES, EXPRESS AND IMPLIED, INCLUDING WITHOUT LIMITATION ANY IMPLIED WARRANTIES OF MERCHANTABILITY, FITNESS FOR A PARTICULAR PURPOSE OR NON-INFRINGEMENT OF THIRD PARTY INTELLECTUAL PROPERTY RIGHTS.

These resources are intended for skilled developers designing with TI products. You are solely responsible for (1) selecting the appropriate TI products for your application, (2) designing, validating and testing your application, and (3) ensuring your application meets applicable standards, and any other safety, security, regulatory or other requirements.

These resources are subject to change without notice. TI grants you permission to use these resources only for development of an application that uses the TI products described in the resource. Other reproduction and display of these resources is prohibited. No license is granted to any other TI intellectual property right or to any third party intellectual property right. TI disclaims responsibility for, and you will fully indemnify TI and its representatives against, any claims, damages, costs, losses, and liabilities arising out of your use of these resources.

TI’s products are provided subject to TI’s Terms of Sale or other applicable terms available either on ti.com or provided in conjunction with such TI products. TI’s provision of these resources does not expand or otherwise alter TI’s applicable warranties or warranty disclaimers for TI products.

TI objects to and rejects any additional or different terms you may have proposed.

Mailing Address: Texas Instruments, Post Office Box 655303, Dallas, Texas 75265
Copyright © 2022, Texas Instruments Incorporated