- **Standard ’125-Type Pinout**
- **5-Ω Switch Connection Between Two Ports**
- **Rail-to-Rail Switching on Data I/O Ports**
- **I_{off} Supports Partial-Power-Down Mode Operation**
- **Latch-Up Performance Exceeds 100 mA Per JESD 78, Class II**

D, DGV, NS, OR PW PACKAGE
(TOP VIEW)

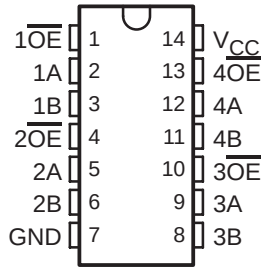

RGY PACKAGE
(TOP VIEW)

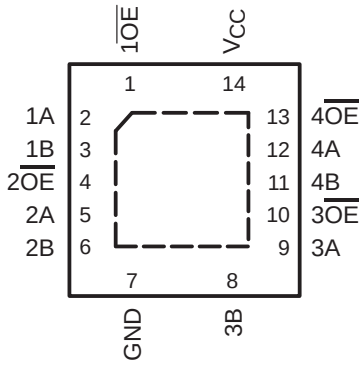

DBQ PACKAGE
(TOP VIEW)

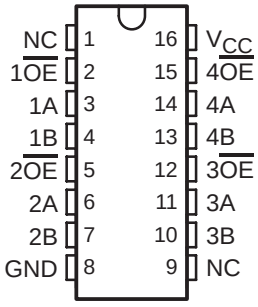

NC − No internal connection

description/ordering information

The SN74CBTLV3125 quadruple FET bus switch features independent line switches. Each switch is disabled when the associated output-enable ($\overline{OE}$) input is high.

This device is fully specified for partial-power-down applications using I_{off}. The I_{off} feature ensures that damaging current will not backflow through the device when it is powered down. The device has isolation during power off.

To ensure the high-impedance state during power up or power down, $\overline{OE}$ should be tied to V_{CC} through a pullup resistor; the minimum value of the resistor is determined by the current-sinking capability of the driver.

ORDERING INFORMATION

T_A	PACKAGE†		ORDERABLE PART NUMBER	TOP-SIDE MARKING
−40°C to 85°C	QFN − RGY	Tape and reel	SN74CBTLV3125RGYR	CL125
	SOIC − D	Tube	SN74CBTLV3125D	CBTLV3125
		Tape and reel	SN74CBTLV3125DR	
	SOP − NS	Tape and reel	SN74CBTLV3125NSR	CBTLV3125
	SSOP (QSOP) − DBQ	Tape and reel	SN74CBTLV3125DBQR	CL125
	TSSOP − PW	Tape and reel	SN74CBTLV3125PWR	CL125
	TVSOP − DGV	Tape and reel	SN74CBTLV3125DGVR	CL125

† Package drawings, standard packing quantities, thermal data, symbolization, and PCB design guidelines are available at www.ti.com/sc/package.

Please be aware that an important notice concerning availability, standard warranty, and use in critical applications of Texas Instruments semiconductor products and disclaimers thereto appears at the end of this data sheet.

PRODUCTION DATA information is current as of publication date. Products conform to specifications per the terms of Texas Instruments standard warranty. Production processing does not necessarily include testing of all parameters.

Copyright © 2003, Texas Instruments Incorporated

FUNCTION TABLE
(each bus switch)

INPUT $\overline{OE}$	FUNCTION
L	A port = B port
H	Disconnect

logic diagram (positive logic)

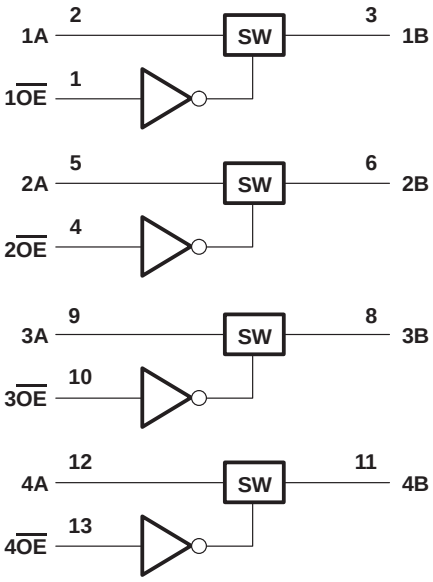

Pin numbers shown are for the D, DGV, NS, PW, and RGY packages.

simplified schematic, each FET switch

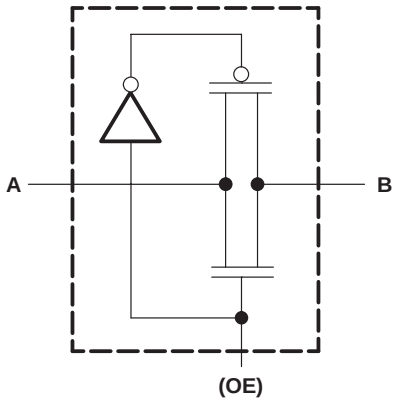

absolute maximum ratings over operating free-air temperature range (unless otherwise noted)†

Supply voltage range, V_{CC} . . . . . −0.5 V to 4.6 V
Input voltage range, V_I (see Note 1) . . . . . −0.5 V to 4.6 V
Continuous channel current . . . . . 128 mA
Input clamp current, I_{IK} ($V_{I/O}$ < 0) . . . . . −50 mA
Package thermal impedance, θ_{JA} (see Note 2): D package . . . . . 86°C/W
(see Note 2): DBQ package . . . . . 90°C/W
(see Note 2): DGV package . . . . . 127°C/W
(see Note 2): NS package . . . . . 76°C/W
(see Note 2): PW package . . . . . 113°C/W
(see Note 3): RGY package . . . . . 47°C/W
Storage temperature range, T_{stg} . . . . . −65°C to 150°C

† Stresses beyond those listed under “absolute maximum ratings” may cause permanent damage to the device. These are stress ratings only, and functional operation of the device at these or any other conditions beyond those indicated under “recommended operating conditions” is not implied. Exposure to absolute-maximum-rated conditions for extended periods may affect device reliability.

NOTES: 1. The input and output negative-voltage ratings may be exceeded if the input and output clamp-current ratings are observed.
2. The package thermal impedance is calculated in accordance with JESD 51-7.
3. The package thermal impedance is calculated in accordance with JESD 51-5.

recommended operating conditions (see Note 4)

			MIN	MAX	UNIT
V_{CC}	Supply voltage		2.3	3.6	V
V_{IH}	High-level control input voltage	V_{CC} = 2.3 V to 2.7 V	1.7		V
		V_{CC} = 2.7 V to 3.6 V	2		
V_{IL}	Low-level control input voltage	V_{CC} = 2.3 V to 2.7 V		0.7	V
		V_{CC} = 2.7 V to 3.6 V		0.8	
T_A	Operating free-air temperature		−40	85	°C

NOTE 4: All unused control inputs of the device must be held at V_{CC} or GND to ensure proper device operation. Refer to the TI application report, *Implications of Slow or Floating CMOS Inputs*, literature number SCBA004.

electrical characteristics over recommended operating free-air temperature range (unless otherwise noted)

PARAMETER		TEST CONDITIONS			MIN	TYP†	MAX	UNIT
V_{IK}		V_{CC} = 3 V,	I_I = −18 mA				−1.2	V
I_I		V_{CC} = 3.6 V,	V_I = V_{CC} or GND				±1	μA
I_{off}		V_{CC} = 0,	V_I or V_O = 0 to 3.6 V				10	μA
I_{CC}		V_{CC} = 3.6 V,	I_O = 0,	V_I = V_{CC} or GND			10	μA
ΔI_{CC}‡	Control inputs	V_{CC} = 3.6 V,	One input at 3 V,	Other inputs at V_{CC} or GND			300	μA
C_i	Control inputs	V_I = 3 V or 0				2.5		pF
$C_{io(OFF)}$		V_O = 3 V or 0,	$\overline{OE}$ = V_{CC}			7		pF
r_{on}§		V_{CC} = 2.3 V, TYP at V_{CC} = 2.5 V	V_I = 0	I_I = 64 mA		5	8	Ω
				I_I = 24 mA		5	8	
			V_I = 1.7 V,	I_I = 15 mA		27	40	
		V_{CC} = 3 V	V_I = 0	I_I = 64 mA		5	7	
				I_I = 24 mA		5	7	
			V_I = 2.4 V,	I_I = 15 mA		10	15	

† All typical values are at V_{CC} = 3.3 V (unless otherwise noted), T_A = 25°C.
‡ This is the increase in supply current for each input that is at the specified voltage level, rather than V_{CC} or GND.
§ Measured by the voltage drop between the A and B terminals at the indicated current through the switch. On-state resistance is determined by the lower of the voltages of the two (A or B) terminals.

switching characteristics over recommended operating free-air temperature range (unless otherwise noted) (see Figure 1)

PARAMETER	FROM (INPUT)	TO (OUTPUT)	V_{CC} = 2.5 V ± 0.2 V		V_{CC} = 3.3 V ± 0.3 V		UNIT
			MIN	MAX	MIN	MAX	
t_{pd}¶	A or B	B or A		0.15		0.25	ns
t_{en}	$\overline{OE}$	A or B	2	4.6	2	4.4	ns
t_{dis}	$\overline{OE}$	A or B	1.1	3.9	1	4.2	ns

¶ The propagation delay is the calculated RC time constant of the typical on-state resistance of the switch and the specified load capacitance, when driven by an ideal voltage source (zero output impedance).

PARAMETER MEASUREMENT INFORMATION

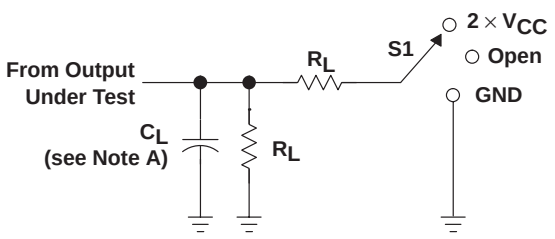

LOAD CIRCUIT

TEST	S1
t_{PLH}/t_{PHL} t_{PLZ}/t_{PZL} t_{PHZ}/t_{PZH}	Open $2 \times V_{CC}$ GND

V_{CC}	C_L	R_L	V_Δ
2.5 V ±0.2 V	30 pF	500 Ω	0.15 V
3.3 V ±0.3 V	50 pF	500 Ω	0.3 V

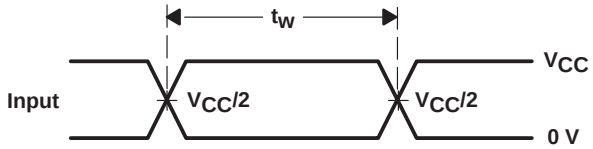

VOLTAGE WAVEFORMS
PULSE DURATION

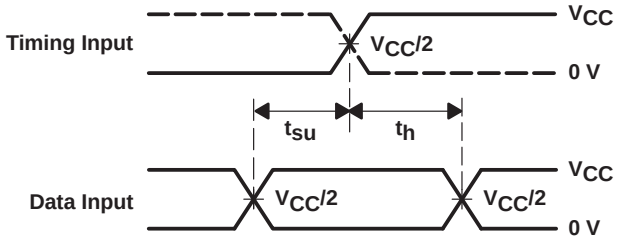

VOLTAGE WAVEFORMS
SETUP AND HOLD TIMES

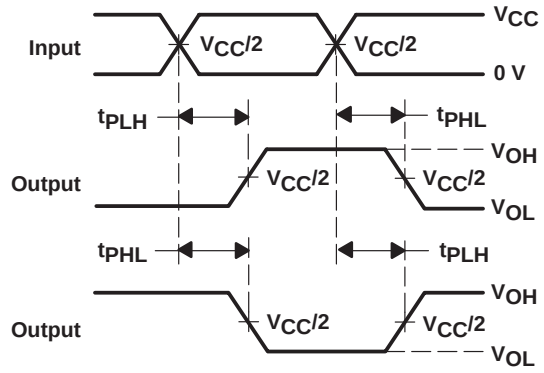

VOLTAGE WAVEFORMS
PROPAGATION DELAY TIMES
INVERTING AND NONINVERTING OUTPUTS

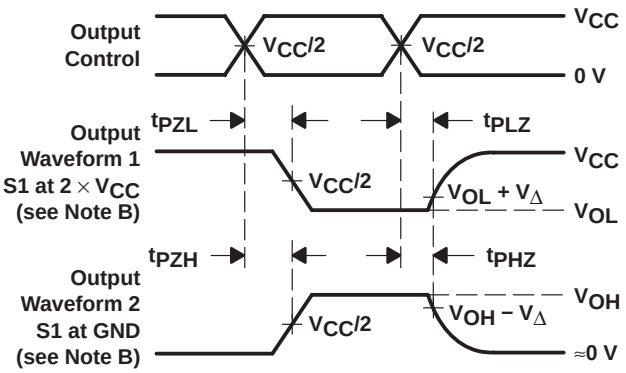

VOLTAGE WAVEFORMS
ENABLE AND DISABLE TIMES
LOW- AND HIGH-LEVEL ENABLING

NOTES: A. C_L includes probe and jig capacitance.
B. Waveform 1 is for an output with internal conditions such that the output is low except when disabled by the output control. Waveform 2 is for an output with internal conditions such that the output is high except when disabled by the output control.
C. All input pulses are supplied by generators having the following characteristics: PRR ≤ 10 MHz, Z_O = 50 Ω, t_r ≤ 2 ns, t_f ≤ 2 ns.
D. The outputs are measured one at a time with one transition per measurement.
E. t_{PLZ} and t_{PHZ} are the same as t_{dis}.
F. t_{PZL} and t_{PZH} are the same as t_{en}.
G. t_{PLH} and t_{PHL} are the same as t_{pd}.
H. All parameters and waveforms are not applicable to all devices.

Figure 1. Load Circuit and Voltage Waveforms

PACKAGING INFORMATION

Orderable Device	Status (1)	Package Type	Package Drawing	Pins	Package Qty	Eco Plan (2)	Lead finish/ Ball material (6)	MSL Peak Temp (3)	Op Temp (°C)	Device Marking (4/5)	Samples
74CBTLV3125DBQRE4	ACTIVE	SSOP	DBQ	16	2500	RoHS & Green	NIPDAU	Level-2-260C-1 YEAR	-40 to 85	CL125	Samples
74CBTLV3125DBQRG4	ACTIVE	SSOP	DBQ	16	2500	RoHS & Green	NIPDAU	Level-2-260C-1 YEAR	-40 to 85	CL125	Samples
74CBTLV3125PWRG4	ACTIVE	TSSOP	PW	14	2000	RoHS & Green	NIPDAU	Level-1-260C-UNLIM	-40 to 85	CL125	Samples
SN74CBTLV3125D	ACTIVE	SOIC	D	14	50	RoHS & Green	NIPDAU	Level-1-260C-UNLIM	-40 to 85	CBTLV3125	Samples
SN74CBTLV3125DBQR	ACTIVE	SSOP	DBQ	16	2500	RoHS & Green	NIPDAU	Level-2-260C-1 YEAR	-40 to 85	CL125	Samples
SN74CBTLV3125DGVR	ACTIVE	TVSOP	DGV	14	2000	RoHS & Green	NIPDAU	Level-1-260C-UNLIM	-40 to 85	CL125	Samples
SN74CBTLV3125DR	ACTIVE	SOIC	D	14	2500	RoHS & Green	NIPDAU	Level-1-260C-UNLIM	-40 to 85	CBTLV3125	Samples
SN74CBTLV3125PW	ACTIVE	TSSOP	PW	14	90	RoHS & Green	NIPDAU	Level-1-260C-UNLIM	-40 to 85	CL125	Samples
SN74CBTLV3125PWG4	ACTIVE	TSSOP	PW	14	90	RoHS & Green	NIPDAU	Level-1-260C-UNLIM	-40 to 85	CL125	Samples
SN74CBTLV3125PWR	ACTIVE	TSSOP	PW	14	2000	RoHS & Green	NIPDAU	Level-1-260C-UNLIM	-40 to 85	CL125	Samples
SN74CBTLV3125RGYR	ACTIVE	VQFN	RGY	14	3000	RoHS & Green	NIPDAU	Level-2-260C-1 YEAR	-40 to 85	CL125	Samples

(1) The marketing status values are defined as follows:
ACTIVE: Product device recommended for new designs.
LIFEBUY: TI has announced that the device will be discontinued, and a lifetime-buy period is in effect.
NRND: Not recommended for new designs. Device is in production to support existing customers, but TI does not recommend using this part in a new design.
PREVIEW: Device has been announced but is not in production. Samples may or may not be available.
OBSOLETE: TI has discontinued the production of the device.

(2) **RoHS:** TI defines "RoHS" to mean semiconductor products that are compliant with the current EU RoHS requirements for all 10 RoHS substances, including the requirement that RoHS substance do not exceed 0.1% by weight in homogeneous materials. Where designed to be soldered at high temperatures, "RoHS" products are suitable for use in specified lead-free processes. TI may reference these types of products as "Pb-Free".
RoHS Exempt: TI defines "RoHS Exempt" to mean products that contain lead but are compliant with EU RoHS pursuant to a specific EU RoHS exemption.
Green: TI defines "Green" to mean the content of Chlorine (Cl) and Bromine (Br) based flame retardants meet JS709B low halogen requirements of <=1000ppm threshold. Antimony trioxide based flame retardants must also meet the <=1000ppm threshold requirement.

(3) MSL, Peak Temp. - The Moisture Sensitivity Level rating according to the JEDEC industry standard classifications, and peak solder temperature.

(4) There may be additional marking, which relates to the logo, the lot trace code information, or the environmental category on the device.

(5) Multiple Device Markings will be inside parentheses. Only one Device Marking contained in parentheses and separated by a "~" will appear on a device. If a line is indented then it is a continuation of the previous line and the two combined represent the entire Device Marking for that device.

(6) Lead finish/Ball material - Orderable Devices may have multiple material finish options. Finish options are separated by a vertical ruled line. Lead finish/Ball material values may wrap to two lines if the finish value exceeds the maximum column width.

Important Information and Disclaimer: The information provided on this page represents TI's knowledge and belief as of the date that it is provided. TI bases its knowledge and belief on information provided by third parties, and makes no representation or warranty as to the accuracy of such information. Efforts are underway to better integrate information from third parties. TI has taken and continues to take reasonable steps to provide representative and accurate information but may not have conducted destructive testing or chemical analysis on incoming materials and chemicals. TI and TI suppliers consider certain information to be proprietary, and thus CAS numbers and other limited information may not be available for release.

In no event shall TI's liability arising out of such information exceed the total purchase price of the TI part(s) at issue in this document sold by TI to Customer on an annual basis.

TAPE AND REEL INFORMATION

REEL DIMENSIONS

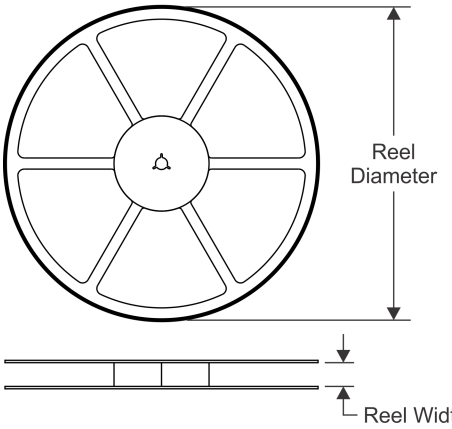

TAPE DIMENSIONS

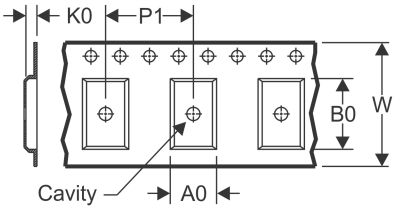

A0	Dimension designed to accommodate the component width
B0	Dimension designed to accommodate the component length
K0	Dimension designed to accommodate the component thickness
W	Overall width of the carrier tape
P1	Pitch between successive cavity centers

QUADRANT ASSIGNMENTS FOR PIN 1 ORIENTATION IN TAPE

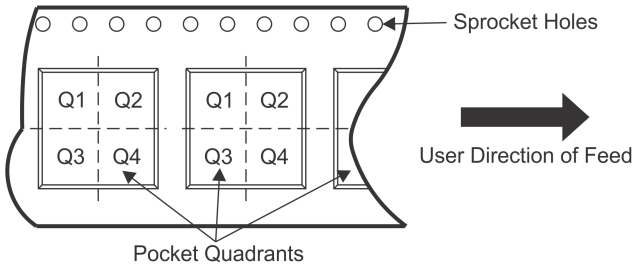

*All dimensions are nominal

Device	Package Type	Package Drawing	Pins	SPQ	Reel Diameter (mm)	Reel Width W1 (mm)	A0 (mm)	B0 (mm)	K0 (mm)	P1 (mm)	W (mm)	Pin1 Quadrant
SN74CBTLV3125DBQR	SSOP	DBQ	16	2500	330.0	12.5	6.4	5.2	2.1	8.0	12.0	Q1
SN74CBTLV3125DGVR	TVSOP	DGV	14	2000	330.0	12.4	6.8	4.0	1.6	8.0	12.0	Q1
SN74CBTLV3125DR	SOIC	D	14	2500	330.0	16.4	6.5	9.0	2.1	8.0	16.0	Q1
SN74CBTLV3125PWR	TSSOP	PW	14	2000	330.0	12.4	6.9	5.6	1.6	8.0	12.0	Q1
SN74CBTLV3125RGYR	VQFN	RGY	14	3000	330.0	12.4	3.75	3.75	1.15	8.0	12.0	Q1

TAPE AND REEL BOX DIMENSIONS

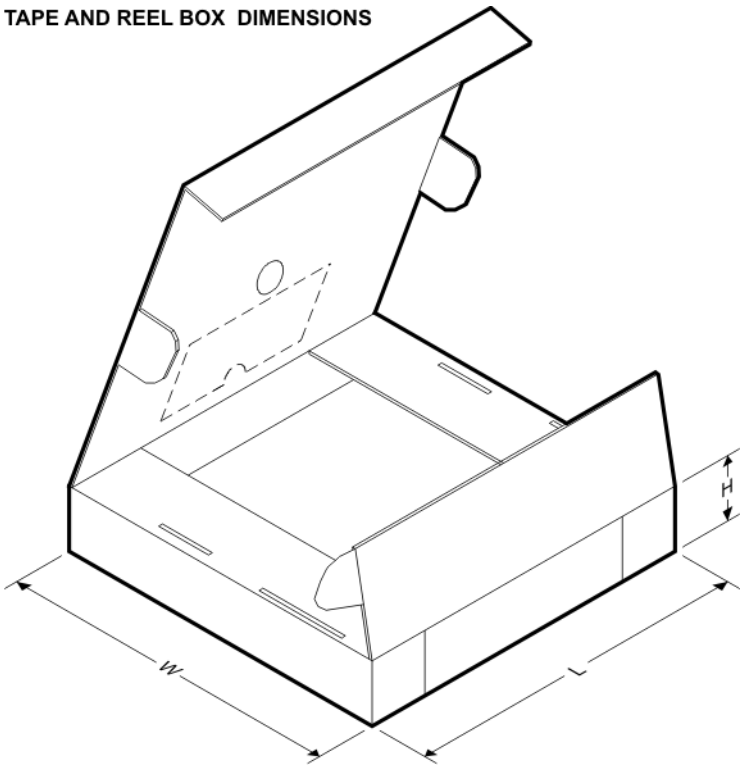

*All dimensions are nominal

Device	Package Type	Package Drawing	Pins	SPQ	Length (mm)	Width (mm)	Height (mm)
SN74CBTLV3125DBQR	SSOP	DBQ	16	2500	340.5	338.1	20.6
SN74CBTLV3125DGVR	TVSOP	DGV	14	2000	367.0	367.0	35.0
SN74CBTLV3125DR	SOIC	D	14	2500	853.0	449.0	35.0
SN74CBTLV3125PWR	TSSOP	PW	14	2000	367.0	367.0	35.0
SN74CBTLV3125RGYR	VQFN	RGY	14	3000	367.0	367.0	35.0

TUBE

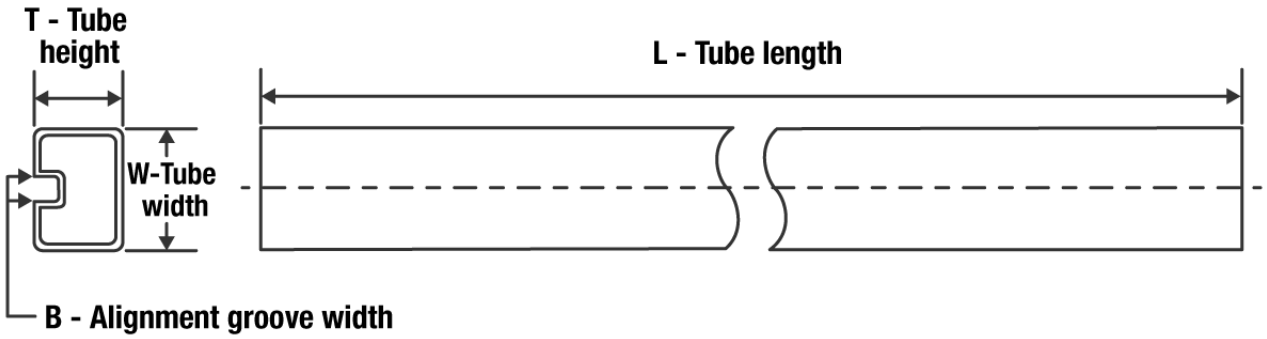

*All dimensions are nominal

Device	Package Name	Package Type	Pins	SPQ	L (mm)	W (mm)	T (µm)	B (mm)
SN74CBTLV3125D	D	SOIC	14	50	506.6	8	3940	4.32
SN74CBTLV3125PW	PW	TSSOP	14	90	530	10.2	3600	3.5
SN74CBTLV3125PWG4	PW	TSSOP	14	90	530	10.2	3600	3.5

DGV (R-PDSO-G)** **PLASTIC SMALL-OUTLINE**

24 PINS SHOWN

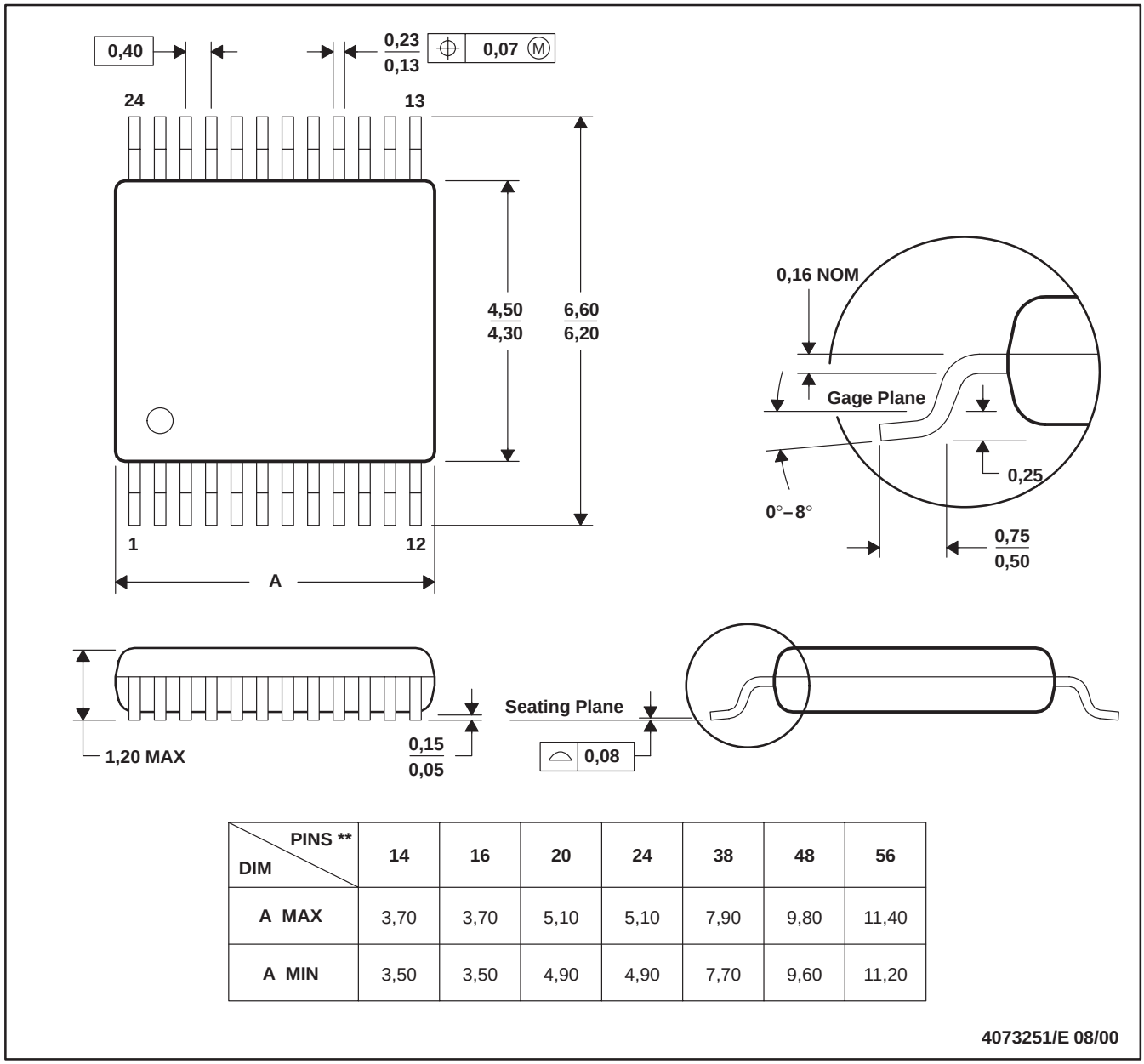

DIM \ PINS **	14	16	20	24	38	48	56
A MAX	3,70	3,70	5,10	5,10	7,90	9,80	11,40
A MIN	3,50	3,50	4,90	4,90	7,70	9,60	11,20

4073251/E 08/00

NOTES: A. All linear dimensions are in millimeters.
B. This drawing is subject to change without notice.
C. Body dimensions do not include mold flash or protrusion, not to exceed 0,15 per side.
D. Falls within JEDEC: 24/48 Pins – MO-153
14/16/20/56 Pins – MO-194

D (R–PDSO–G14) PLASTIC SMALL OUTLINE

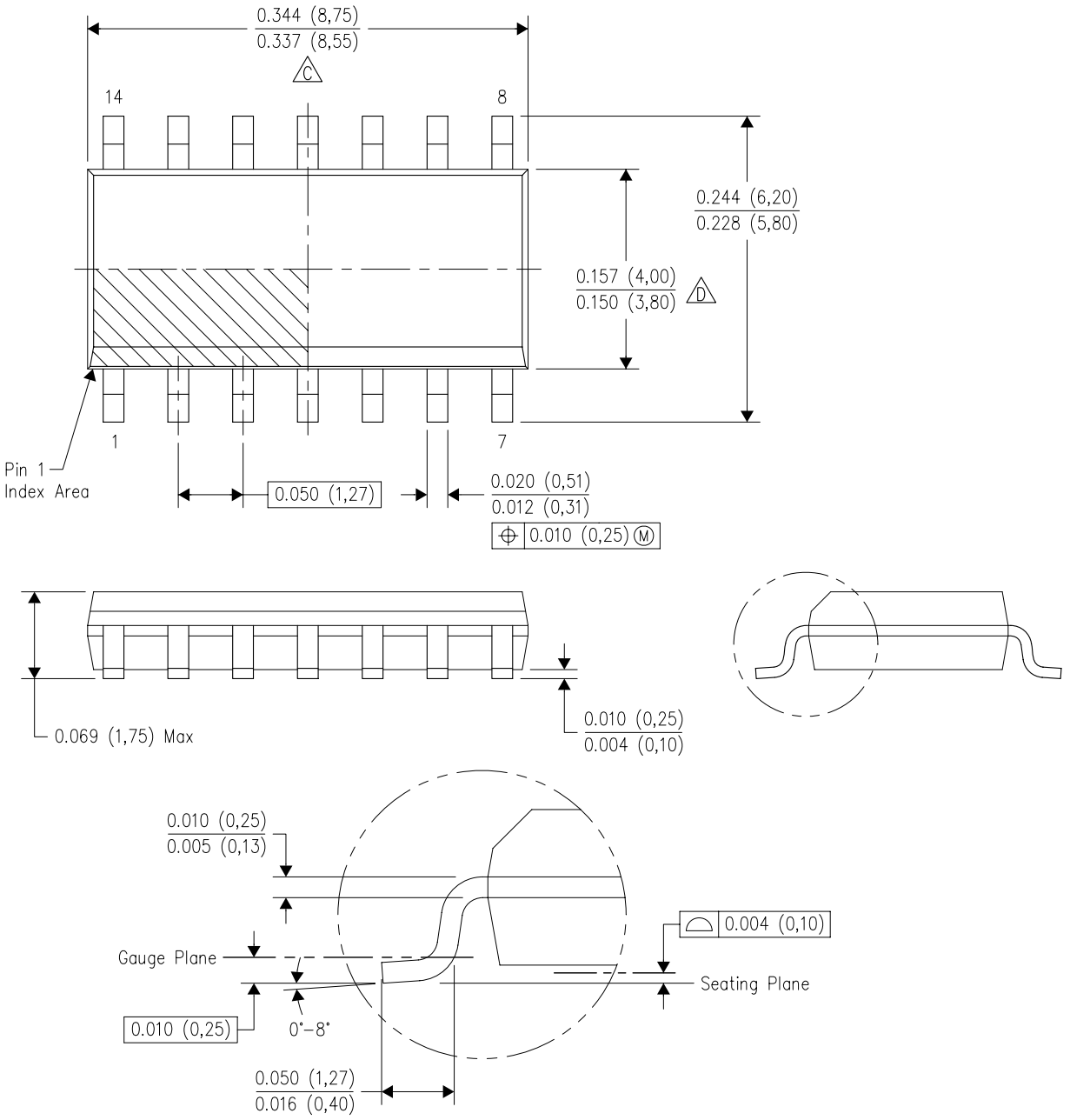

4040047–5/M 06/11

NOTES:
A. All linear dimensions are in inches (millimeters).
B. This drawing is subject to change without notice.
C. Body length does not include mold flash, protrusions, or gate burrs. Mold flash, protrusions, or gate burrs shall not exceed 0.006 (0,15) each side.
D. Body width does not include interlead flash. Interlead flash shall not exceed 0.017 (0,43) each side.
E. Reference JEDEC MS–012 variation AB.

D (R–PDSO–G14) PLASTIC SMALL OUTLINE

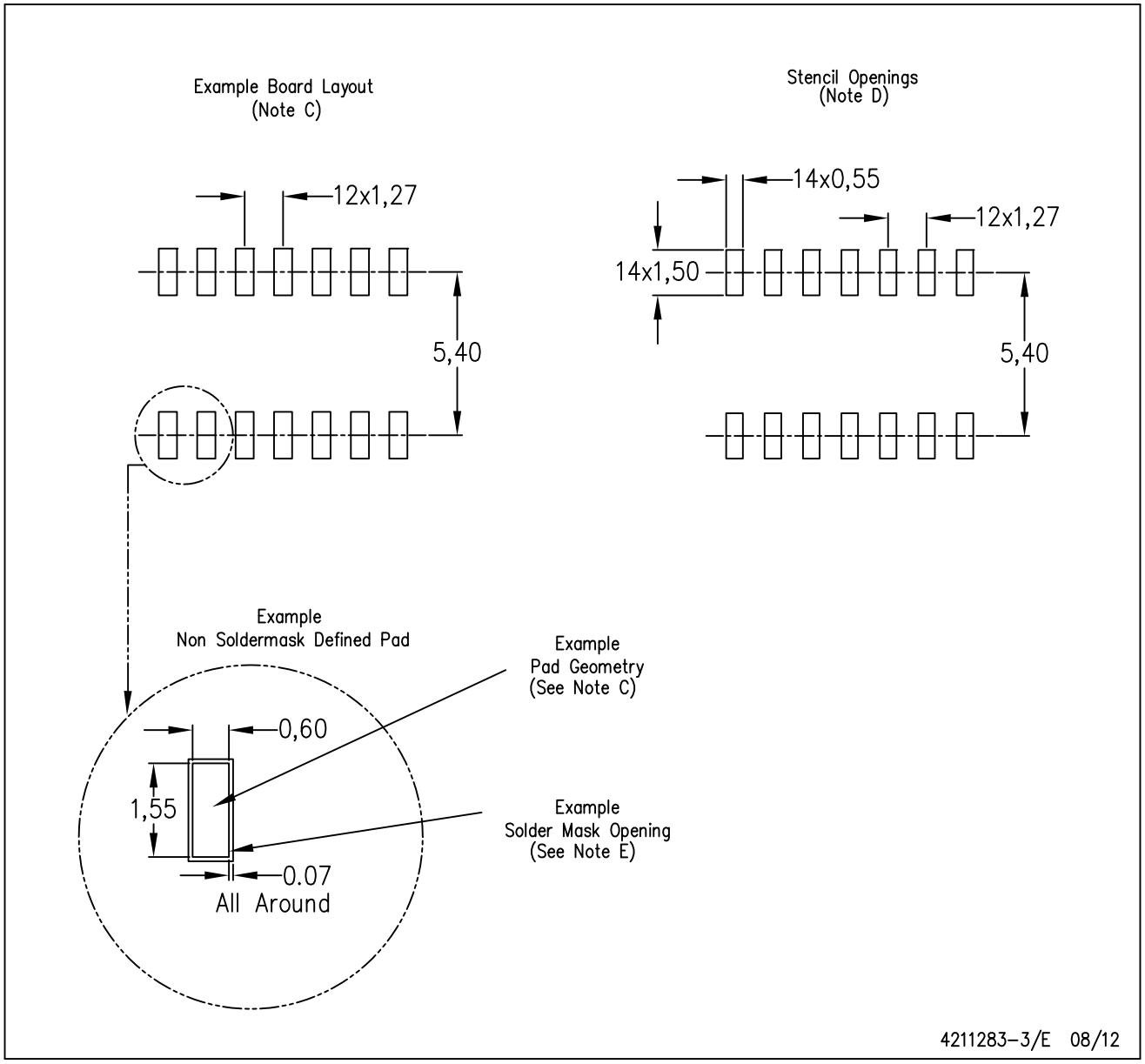

NOTES:
A. All linear dimensions are in millimeters.
B. This drawing is subject to change without notice.
C. Publication IPC–7351 is recommended for alternate designs.
D. Laser cutting apertures with trapezoidal walls and also rounding corners will offer better paste release. Customers should contact their board assembly site for stencil design recommendations. Refer to IPC–7525 for other stencil recommendations.
E. Customers should contact their board fabrication site for solder mask tolerances between and around signal pads.

PW (R–PDSO–G14) PLASTIC SMALL OUTLINE

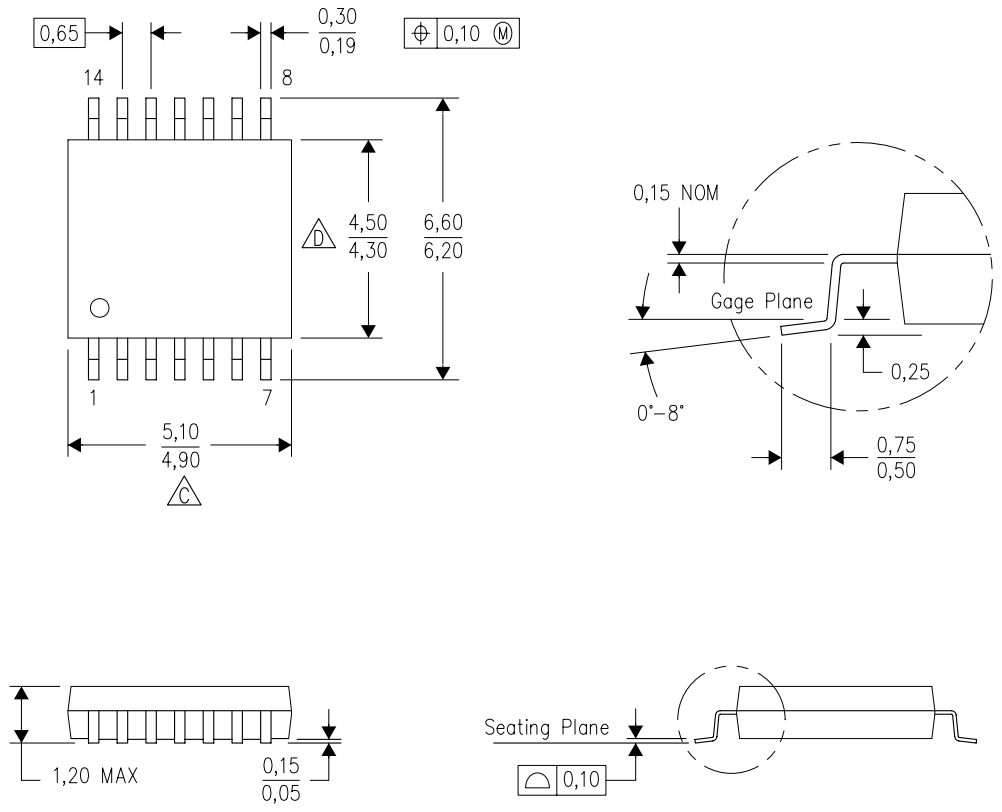

4040064–3/G 02/11

NOTES:
A. All linear dimensions are in millimeters. Dimensioning and tolerancing per ASME Y14.5M–1994.
B. This drawing is subject to change without notice.
C. Body length does not include mold flash, protrusions, or gate burrs. Mold flash, protrusions, or gate burrs shall not exceed 0,15 each side.
D. Body width does not include interlead flash. Interlead flash shall not exceed 0,25 each side.
E. Falls within JEDEC MO–153

PW (R–PDSO–G14) PLASTIC SMALL OUTLINE

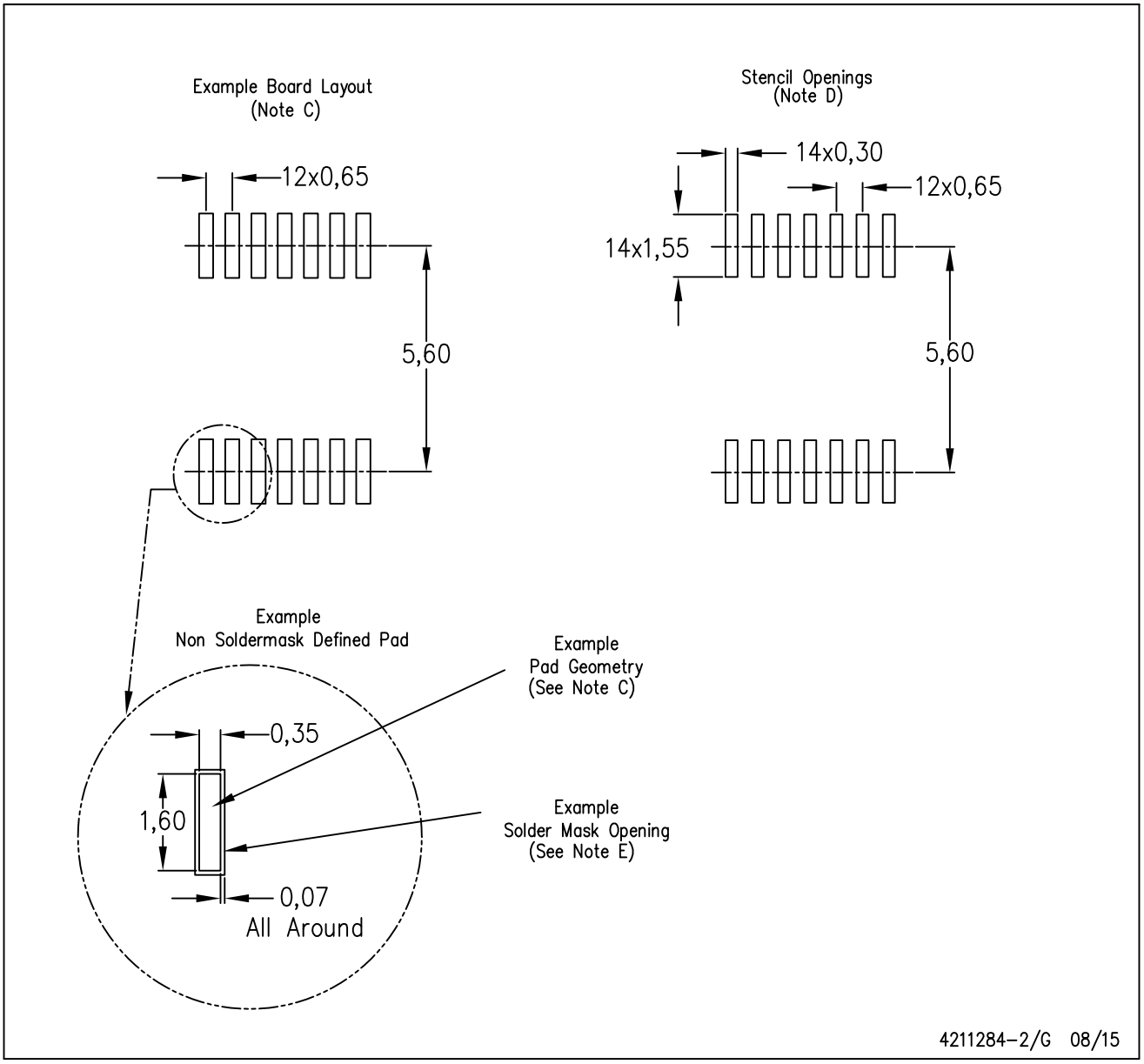

NOTES:
A. All linear dimensions are in millimeters.
B. This drawing is subject to change without notice.
C. Publication IPC–7351 is recommended for alternate designs.
D. Laser cutting apertures with trapezoidal walls and also rounding corners will offer better paste release. Customers should contact their board assembly site for stencil design recommendations. Refer to IPC–7525 for other stencil recommendations.
E. Customers should contact their board fabrication site for solder mask tolerances between and around signal pads.

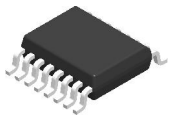

PACKAGE OUTLINE

DBQ0016A

SSOP - 1.75 mm max height

SHRINK SMALL-OUTLINE PACKAGE

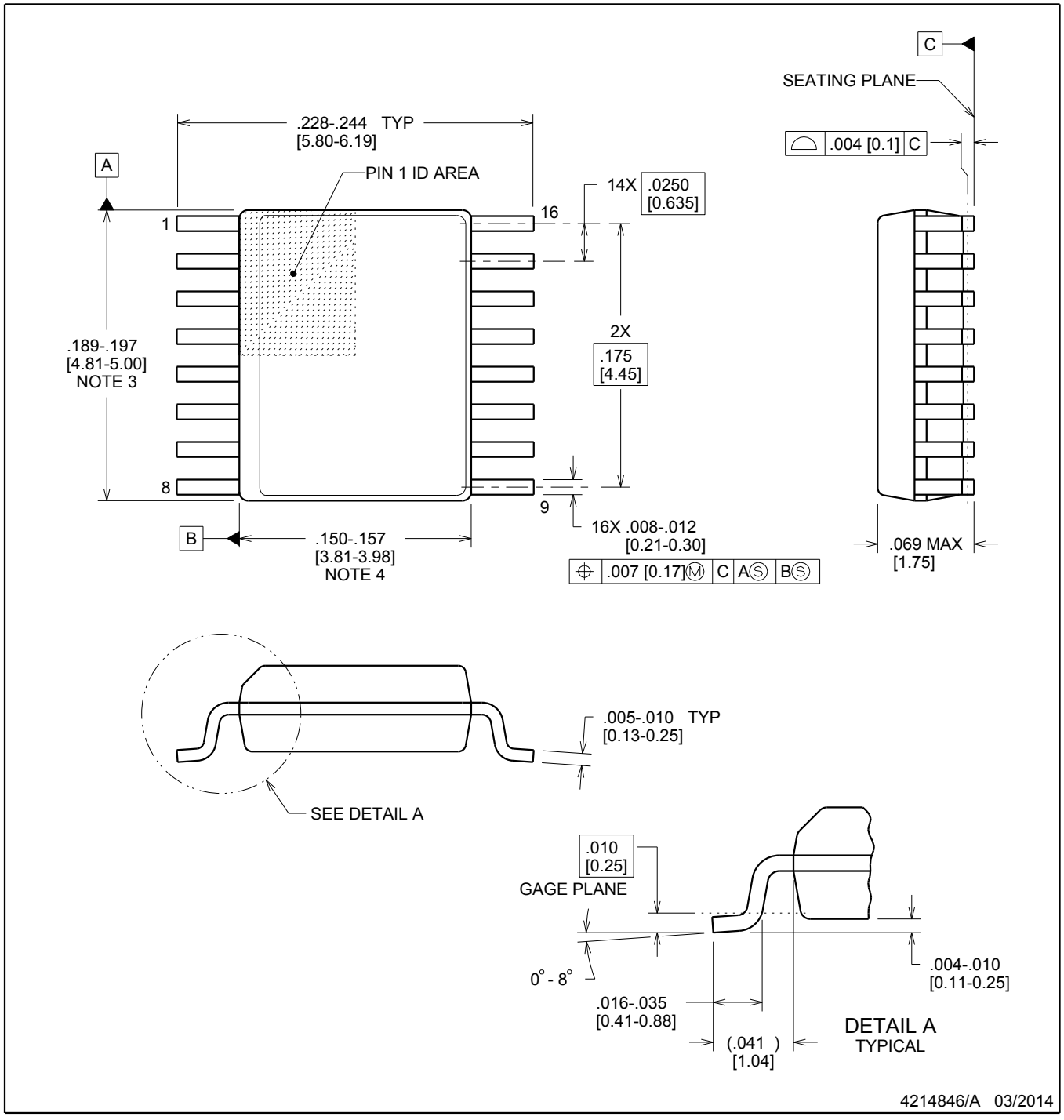

NOTES:

1. Linear dimensions are in inches [millimeters]. Dimensions in parenthesis are for reference only. Controlling dimensions are in inches. Dimensioning and tolerancing per ASME Y14.5M.
2. This drawing is subject to change without notice.
3. This dimension does not include mold flash, protrusions, or gate burrs. Mold flash, protrusions, or gate burrs shall not exceed .006 inch, per side.
4. This dimension does not include interlead flash.
5. Reference JEDEC registration MO-137, variation AB.

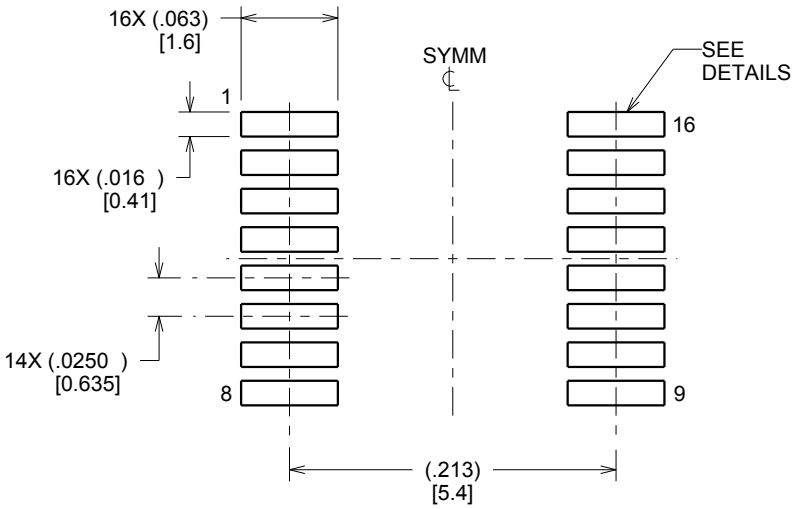

LAND PATTERN EXAMPLE
SCALE:8X

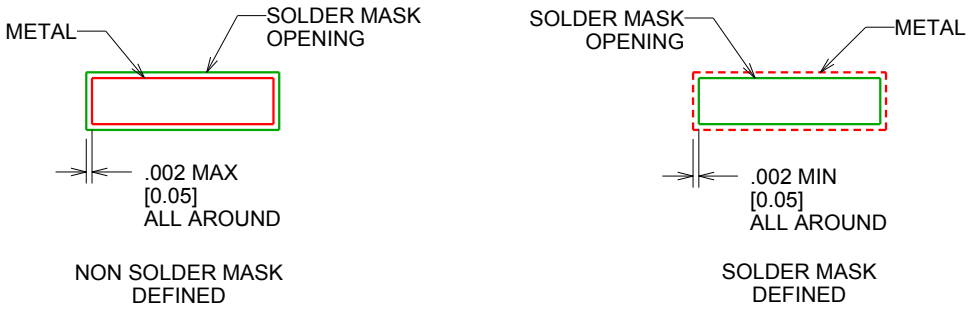

SOLDER MASK DETAILS

4214846/A 03/2014

NOTES: (continued)

6. Publication IPC-7351 may have alternate designs.
7. Solder mask tolerances between and around signal pads can vary based on board fabrication site.

EXAMPLE STENCIL DESIGN

DBQ0016A

SSOP - 1.75 mm max height

SHRINK SMALL-OUTLINE PACKAGE

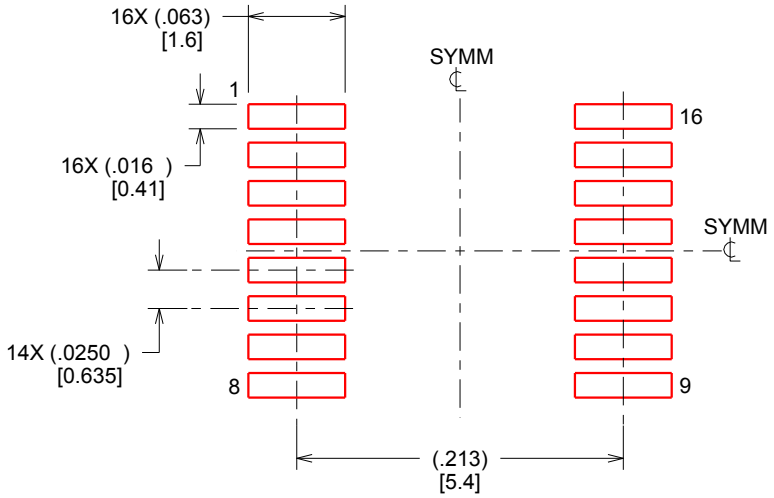

SOLDER PASTE EXAMPLE
BASED ON .005 INCH [0.127 MM] THICK STENCIL
SCALE:8X

4214846/A 03/2014

NOTES: (continued)

8. Laser cutting apertures with trapezoidal walls and rounded corners may offer better paste release. IPC-7525 may have alternate design recommendations.
9. Board assembly site may have different recommendations for stencil design.

RGY (S–PVQFN–N14) PLASTIC QUAD FLATPACK NO–LEAD

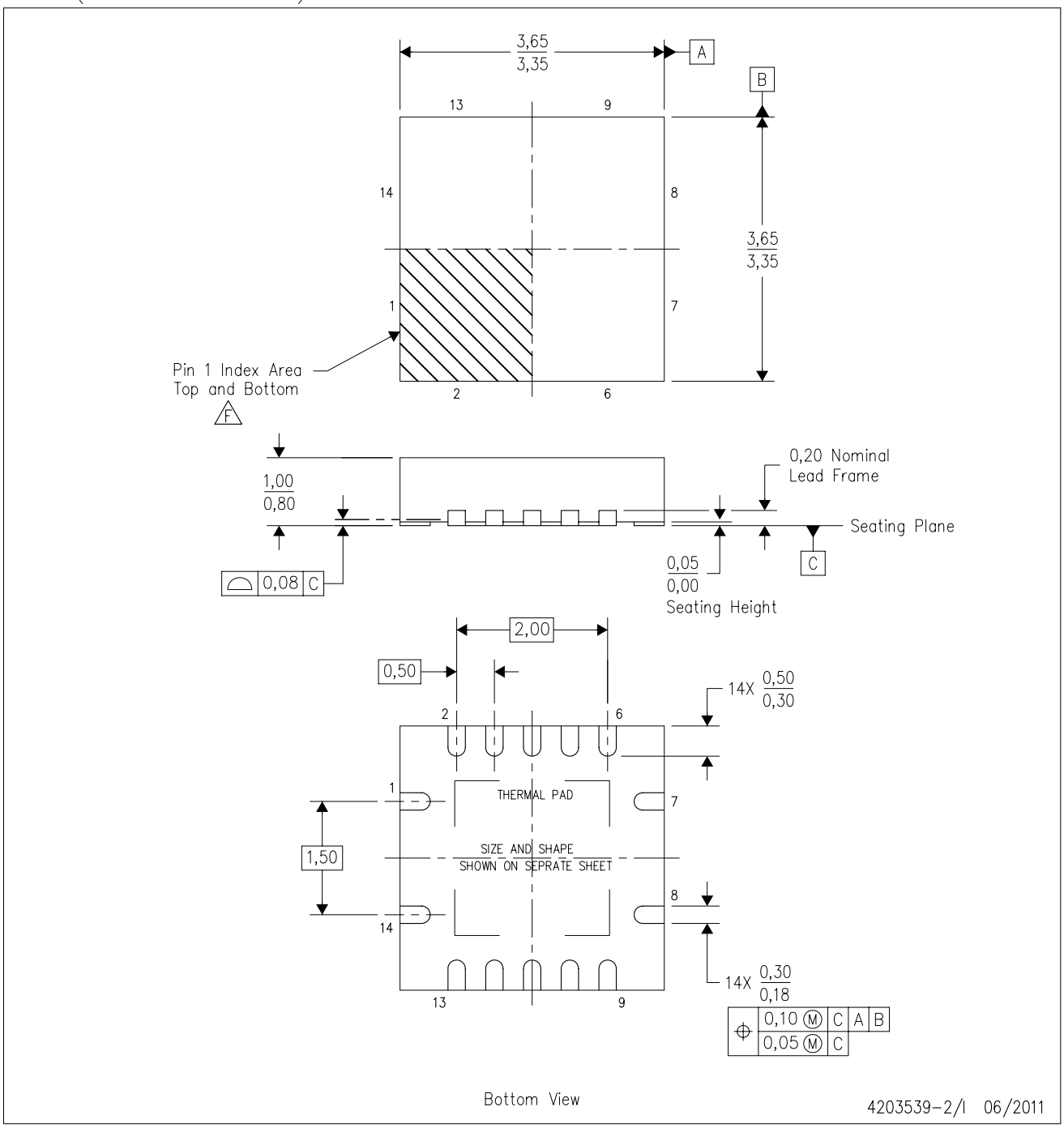

NOTES:
A. All linear dimensions are in millimeters. Dimensioning and tolerancing per ASME Y14.5M–1994.
B. This drawing is subject to change without notice.
C. QFN (Quad Flatpack No–Lead) package configuration.
D. The package thermal pad must be soldered to the board for thermal and mechanical performance.
E. See the additional figure in the Product Data Sheet for details regarding the exposed thermal pad features and dimensions.
F. Pin 1 identifiers are located on both top and bottom of the package and within the zone indicated. The Pin 1 identifiers are either a molded, marked, or metal feature.
G. Package complies to JEDEC MO–241 variation BA.

RGY (S–PVQFN–N14) PLASTIC QUAD FLATPACK NO–LEAD

THERMAL INFORMATION

This package incorporates an exposed thermal pad that is designed to be attached directly to an external heatsink. The thermal pad must be soldered directly to the printed circuit board (PCB). After soldering, the PCB can be used as a heatsink. In addition, through the use of thermal vias, the thermal pad can be attached directly to the appropriate copper plane shown in the electrical schematic for the device, or alternatively, can be attached to a special heatsink structure designed into the PCB. This design optimizes the heat transfer from the integrated circuit (IC).

For information on the Quad Flatpack No–Lead (QFN) package and its advantages, refer to Application Report, QFN/SON PCB Attachment, Texas Instruments Literature No. SLUA271. This document is available at www.ti.com.

The exposed thermal pad dimensions for this package are shown in the following illustration.

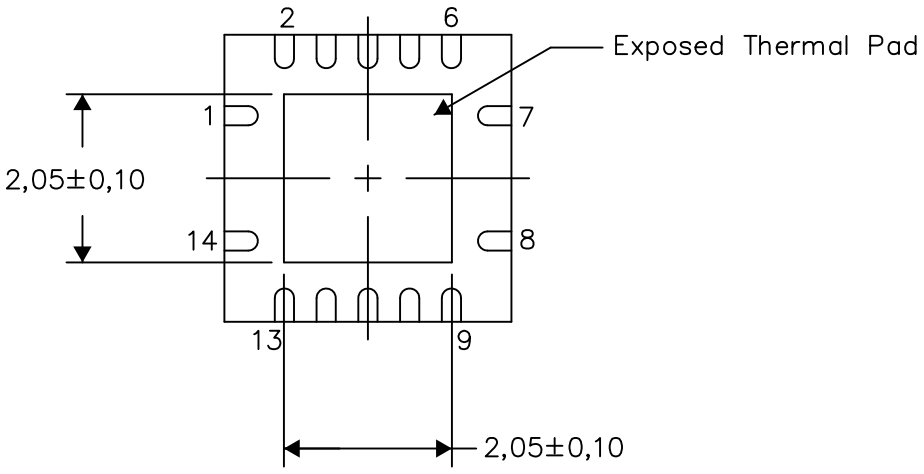

Bottom View

Exposed Thermal Pad Dimensions

4206353–2/P 03/14

NOTE: All linear dimensions are in millimeters

RGY (S–PVQFN–N14) PLASTIC QUAD FLATPACK NO–LEAD

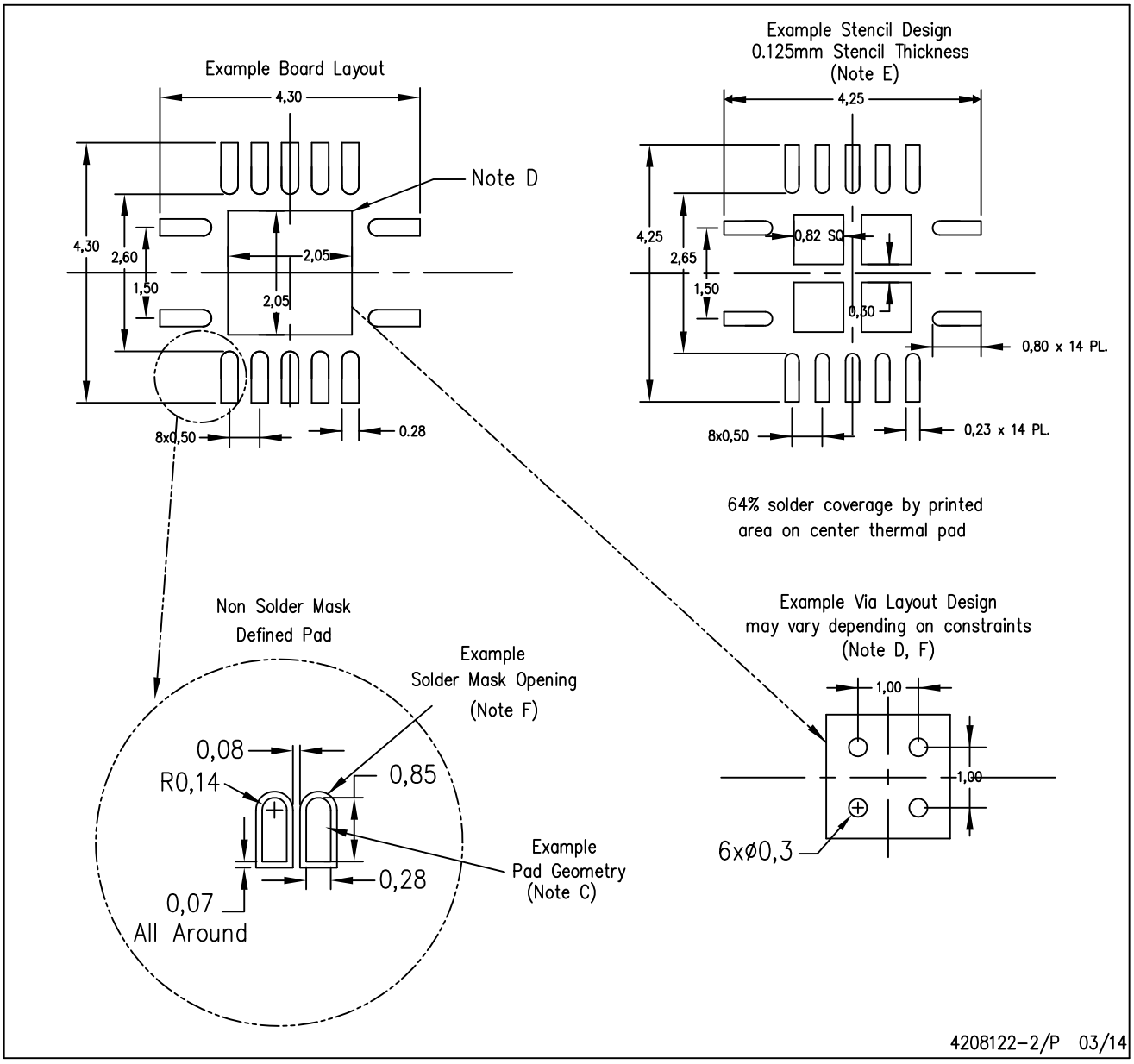

NOTES:
A. All linear dimensions are in millimeters.
B. This drawing is subject to change without notice.
C. Publication IPC–7351 is recommended for alternate designs.
D. This package is designed to be soldered to a thermal pad on the board. Refer to Application Note, Quad Flat–Pack QFN/SON PCB Attachment, Texas Instruments Literature No. SLUA271, and also the Product Data Sheets for specific thermal information, via requirements, and recommended board layout. These documents are available at www.ti.com <http: //www.ti.com>.
E. Laser cutting apertures with trapezoidal walls and also rounding corners will offer better paste release. Customers should contact their board assembly site for stencil design recommendations. Refer to IPC 7525 for stencil design considerations.
F. Customers should contact their board fabrication site for minimum solder mask web tolerances between signal pads.

IMPORTANT NOTICE AND DISCLAIMER

TI PROVIDES TECHNICAL AND RELIABILITY DATA (INCLUDING DATA SHEETS), DESIGN RESOURCES (INCLUDING REFERENCE DESIGNS), APPLICATION OR OTHER DESIGN ADVICE, WEB TOOLS, SAFETY INFORMATION, AND OTHER RESOURCES “AS IS” AND WITH ALL FAULTS, AND DISCLAIMS ALL WARRANTIES, EXPRESS AND IMPLIED, INCLUDING WITHOUT LIMITATION ANY IMPLIED WARRANTIES OF MERCHANTABILITY, FITNESS FOR A PARTICULAR PURPOSE OR NON-INFRINGEMENT OF THIRD PARTY INTELLECTUAL PROPERTY RIGHTS.

These resources are intended for skilled developers designing with TI products. You are solely responsible for (1) selecting the appropriate TI products for your application, (2) designing, validating and testing your application, and (3) ensuring your application meets applicable standards, and any other safety, security, regulatory or other requirements.

These resources are subject to change without notice. TI grants you permission to use these resources only for development of an application that uses the TI products described in the resource. Other reproduction and display of these resources is prohibited. No license is granted to any other TI intellectual property right or to any third party intellectual property right. TI disclaims responsibility for, and you will fully indemnify TI and its representatives against, any claims, damages, costs, losses, and liabilities arising out of your use of these resources.

TI’s products are provided subject to TI’s Terms of Sale or other applicable terms available either on ti.com or provided in conjunction with such TI products. TI’s provision of these resources does not expand or otherwise alter TI’s applicable warranties or warranty disclaimers for TI products.

TI objects to and rejects any additional or different terms you may have proposed.

Mailing Address: Texas Instruments, Post Office Box 655303, Dallas, Texas 75265
Copyright © 2022, Texas Instruments Incorporated