TMS320F2837xS 微控制器

1 器件概述

1.1 特性

- TMS320C28x 32 位 CPU
  - 200MHz
  - IEEE 754 单精度浮点单元 (FPU)
  - 三角法数学单元 (TMU)
  - Viterbi / 复杂数学单元 (VCU-II)
- 可编程控制律加速器 (CLA)
  - 200MHz
  - IEEE 754 单精度浮点单元指令
  - 独立于主 CPU 执行代码
- 片上存储器
  - 512KB (256KW) 或 1MB (512KW) 闪存（ECC 保护）
  - 132KB (66KW) 或 164KB (82KW) RAM（ECC 保护或奇偶校验保护）
  - 支持第三方开发的双区安全
  - 唯一标识号
- 时钟和系统控制
  - 两个内部零引脚 10MHz 振荡器
  - 片上晶体振荡器
  - 窗口化看门狗计时器模块
  - 丢失时钟检测电路
- 1.2V 内核、3.3V I/O 设计
- 系统外设
  - 两个支持 ASRAM 和 SDRAM 的外部存储器接口 (EMIF)
  - 6 通道直接存储器存取 (DMA) 控制器
  - 多达 169 个具有输入滤波功能的独立可编程、多路复用通用输入/输出 (GPIO) 引脚
  - 扩展外设中断控制器 (ePIE)
  - 支持多个具有外部唤醒功能的低功耗模式 (LPM)
- 通信外设
  - USB 2.0 (MAC + PHY)
  - 支持 12 引脚 3.3V 兼容通用并行端口 (uPP) 接口
  - 两个控制器局域网 (CAN) 模块（引脚可引导）
  - 三个高速（高达 50MHz）SPI 端口（引脚可引导）
  - 两个多通道缓冲串行端口 (McBSP)
  - 四个串行通信接口 (SCI/UART)（引脚可引导）
  - 两个 I2C 接口（引脚可引导）
- 模拟子系统
  - 多达四个模数转换器 (ADC)
    - 16 位模式
      - 每个转换器的吞吐量为 1.1MSPS（系统吞吐量高达 4.4MSPS）
      - 差分输入
      - 多达 12 个外部通道
    - 12 位模式
      - 每个通道的吞吐量为 3.5MSPS（系统吞吐量高达 14MSPS）
      - 单端输入
      - 多达 24 个外部通道
    - 每个 ADC 上有一个采样保持 (S/H) 电路
    - ADC 转换的硬件集成后处理
      - 饱和失调电压校准
      - 设定点计算误差
      - 具有中断功能的高、低和过零比较
      - 触发至采样延迟捕捉
  - 八个具有 12 位数模转换器 (DAC) 参考的窗口比较器
  - 三个 12 位缓冲 DAC 输出
- 增强型控制外设
  - 具有增强功能的 24 个 PWM 通道
  - 16 个高分辨率脉宽调制器 (HRPWM) 通道
    - 8 个 PWM 模块的 A、B 通道均具有高分辨率
    - 死区支持（对于标准和高分辨率均支持）
  - 6 个增强型捕捉 (eCAP) 模块
  - 3 个增强型正交编码器脉冲 (eQEP) 模块
  - 8 个 Δ-Σ 滤波器模块 (SDFM) 输入通道，每通道有 2 个并联滤波器
    - 标准 SDFM 数据滤波
    - 用于快速响应超范围情况的比较器滤波器
- 可配置逻辑块 (CLB)
  - 增强现有外设功能
  - 支持位置管理器解决方案

本文档旨在为方便起见，提供有关 TI 产品中文版本的信息，以确认产品的概要。 有关适用的官方英文版本的最新信息，请访问 www.ti.com，其内容始终优先。 TI 不保证翻译的准确性和有效性。 在实际设计之前，请务必参考最新版本的英文版本。

- 符合功能安全标准
  - 文档有助于使功能安全系统设计符合 ASIL-D/SIL-3、IEC 60730 C 类和 UL 1998 2 类标准
  - 组件符合 ASIL-B/SIL-2 级标准
- 封装选项：
  - 无铅，绿色环保封装
  - 337 球全新细间距球栅阵列 (nFBGA) [后缀 ZWT]
  - 176 引脚 PowerPAD™耐热增强型薄型四方扁平封装 (HLQFP) [PTP 后缀]
  - 100 引脚 PowerPAD 耐热增强型薄型四方扁平封装 (HTQFP) [PZP 后缀]
- 温度选项：
  - T：–40ºC 至 105ºC 结温
  - S：-40ºC 至 125ºC 结温
  - Q：–40ºC 至 125ºC 自然通风温度（符合面向汽车 应用的 AEC Q100 标准）

1.2 应用

- 中距离/短距离雷达
- 牵引逆变器电机控制
- HVAC 大型商用电机控制
- 自动分拣设备
- CNC 控制
- 交流充电（桩）站
- 直流充电（桩）站
- 电动汽车充电站电源模块
- 能量存储电源转换系统 (PCS)
- 中央逆变器
- 太阳能电源优化器
- 串式逆变器
- 逆变器和电机控制
- 板载充电器 (OBC) 和无线充电器
- 线性电机分段控制器
- 伺服驱动器控制模块
- 交流输入 BLDC 电机驱动器
- 直流输入 BLDC 电机驱动器
- 工业交流/直流转换器
- 三相 UPS

1.3 说明

C2000™ 32 位微控制器在处理、传感和驱动方面进行了优化，可提高实时控制 应用中的闭环性能，例如工业电机驱动、光伏逆变器和数字电源、电动车辆与运输、电机控制以及传感和信号处理。C2000 系列包括高级性能 MCU 和入门级性能 MCU。

TMS320F2837xS 是一款功能强大的 32 位浮点微控制器单元 (MCU)，专用于高级闭环控制 应用 ，例如工业电机驱动、光伏逆变器和数字电源、电动车辆与运输以及传感和信号处理。为加速应用开发，适用于 C2000 MCU 的 DigitalPower 软件开发套件 (SDK) 和适用于 C2000™ MCU 的 MotorControl 软件开发套件 (SDK) 均可提供。

实时控制子系统基于 TI 的 32 位 C28x 浮点 CPU，可提供 200MHz 的信号处理性能。C28x CPU 的性能通过新型 TMU 加速器和 VCU 加速器得到了进一步提升，TMU 加速器可快速执行包含变换和转矩环路计算中常见的三角运算的算法；VCU 加速器可缩短编码应用中常见的复杂数学运算的 时间。

F2837xS 微控制器系列 采用 一个 CLA 实时控制协处理器。CLA 是一款独立的 32 位浮点处理器，运行速度与主 CPU 相同。该 CLA 会对外设触发器作出响应，并与主 C28x CPU 同时执行代码。这种并行处理功能可有效加倍实时控制系统的计算性能。通过利用 CLA 执行时间关键型功能，主 C28x CPU 可以得到释放，以便用于执行通信和诊断等其他任务。

TMS320F2837xS 支持高达 1MB (512KW) 的板载闪存（含纠错码 (ECC)）以及高达 164KB (82KW) 的 SRAM。CPU 上还提供两个 128 位安全区，以实现代码保护。

F2837xS MCU 上还集成了性能模拟和控制外设，进一步实现系统整合。四个独立的 16 位 ADC 可准确、高效地管理多个模拟信号，从而最终提高系统吞吐量。新型 Σ-Δ 滤波器模块 (SDFM) 与 Σ-Δ 调制器配合使用可实现隔离分流测量。包含窗口比较器的比较器子系统 (CMPSS) 可在超过或未满足电流限制条件的情况下保护功率级。其他模拟和控制外设包括 DAC、PWM、eCAPs、eQEP 以及其他外设。

版权 © 2014–2020, Texas Instruments Incorporated

EMIF、CAN 模块（符合 ISO 11898-1/CAN 2.0B 标准）等外设以及新型 uPP 接口扩展了 F2837xS 的连接功能。uPP 接口是 C2000™MCU 的一个新特性，支持与 FPGA 之间或与具有类似 uPP 接口的其他处理器之间的高速并行连接。最后，具有 MAC 和 PHY 的 USB 2.0 端口使用户能够轻松地将通用串行总线 (USB) 连接功能添加到其应用中。

如需详细了解 C2000 MCU，请访问“C2000 概述”，地址为 www.ti.com/c2000。

器件信息 (1)

器件型号	封装	封装尺寸
TMS320F28379SZWT	nFBGA (337)	16.0mm × 16.0mm
TMS320F28377SZWT	nFBGA (337)	16.0mm × 16.0mm
TMS320F28376SZWT	nFBGA (337)	16.0mm × 16.0mm
TMS320F28375SZWT	nFBGA (337)	16.0mm × 16.0mm
TMS320F28374SZWT	nFBGA (337)	16.0mm × 16.0mm
TMS320F28379SPTP	HLQFP (176)	24.0mm × 24.0mm
TMS320F28378SPTP	HLQFP (176)	24.0mm × 24.0mm
TMS320F28377SPTP	HLQFP (176)	24.0mm × 24.0mm
TMS320F28376SPTP	HLQFP (176)	24.0mm × 24.0mm
TMS320F28375SPTP	HLQFP (176)	24.0mm × 24.0mm
TMS320F28374SPTP	HLQFP (176)	24.0mm × 24.0mm
TMS320F28379SPZP	HTQFP (100)	14.0mm × 14.0mm
TMS320F28378SPZP	HTQFP (100)	14.0mm × 14.0mm
TMS320F28377SPZP	HTQFP (100)	14.0mm × 14.0mm
TMS320F28376SPZP	HTQFP (100)	14.0mm × 14.0mm
TMS320F28375SPZP	HTQFP (100)	14.0mm × 14.0mm
TMS320F28374SPZP	HTQFP (100)	14.0mm × 14.0mm

(1) 有关这些器件的更多信息，请参阅机械、封装和可订购信息。

1.4 功能方框图

图 1-1 显示了 CPU 系统及相关外设。

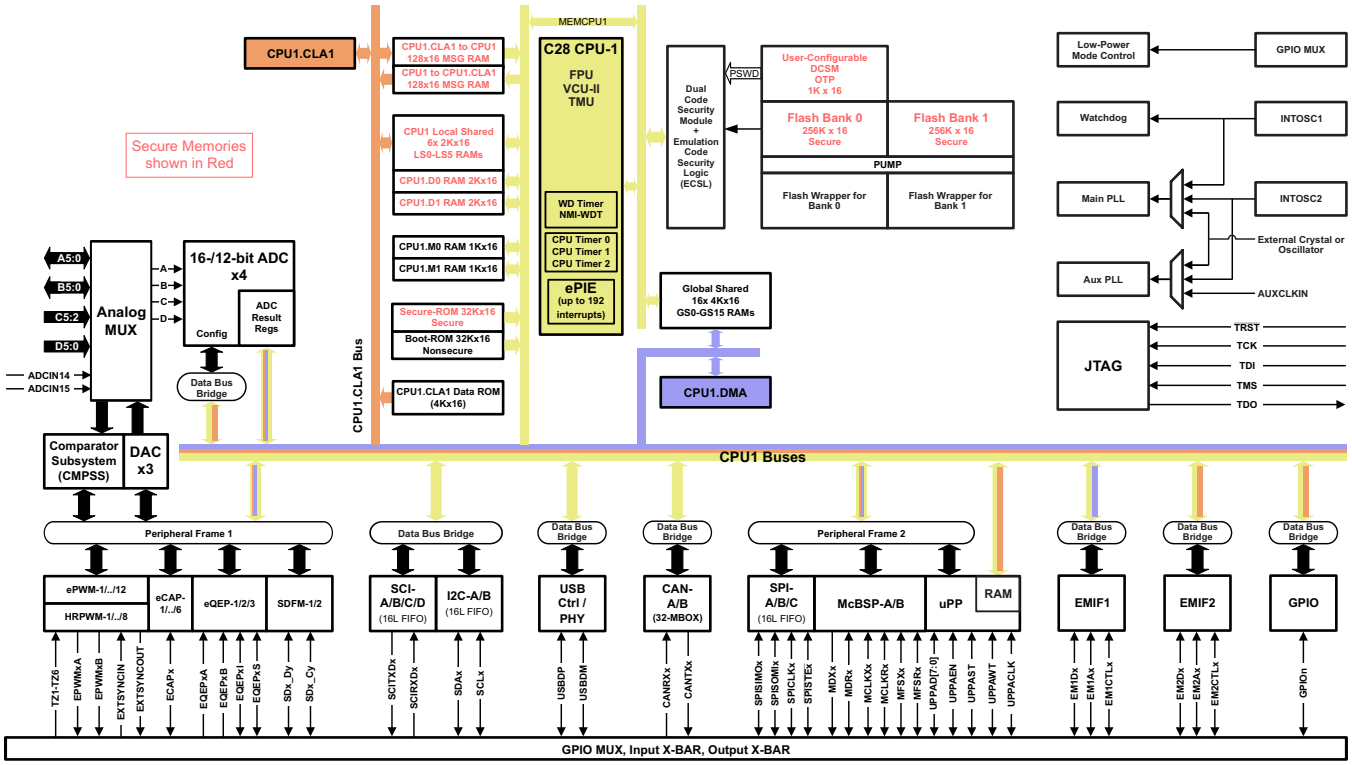

图 **1-1.** 功能方框图

版权 © 2014–2020, Texas Instruments Incorporated

内容

1 器件概述 1
1.1 特性 1
1.2 应用 2
1.3 说明 2
1.4 功能方框图 4
2 修订历史记录 6
3 Device Comparison 8
3.1 Related Products 10
4 Terminal Configuration and Functions 11
4.1 Pin Diagrams 11
4.2 Signal Descriptions 18
4.3 Pins With Internal Pullup and Pulldown 41
4.4 Pin Multiplexing 42
4.5 Connections for Unused Pins 49
5 Specifications 50
5.1 Absolute Maximum Ratings 50
5.2 ESD Ratings – Commercial 51
5.3 ESD Ratings – Automotive 51
5.4 Recommended Operating Conditions 52
5.5 Power Consumption Summary 53
5.6 Electrical Characteristics 57
5.7 Thermal Resistance Characteristics 58
5.8 Thermal Design Considerations 59
5.9 System 60
5.10 Analog Peripherals 95
5.11 Control Peripherals 125
5.12 Communications Peripherals 143
6 Detailed Description 176
6.1 Overview 176
6.2 Functional Block Diagram 176
6.3 Memory 178
6.4 Identification 187
6.5 Bus Architecture – Peripheral Connectivity 188
6.6 C28x Processor 189
6.7 Control Law Accelerator 192
6.8 Direct Memory Access 193
6.9 Boot ROM and Peripheral Booting 195
6.10 Dual Code Security Module 198
6.11 Timers 199
6.12 Nonmaskable Interrupt With Watchdog Timer (NMIWD) 199
6.13 Watchdog 200
6.14 Configurable Logic Block (CLB) 201
6.15 Functional Safety 203
7 Applications, Implementation, and Layout 205
7.1 TI Reference Design 205
8 器件和文档支持 206
8.1 器件和开发支持工具命名规则 206
8.2 标记 207
8.3 工具和软件 208
8.4 文档支持 210
8.5 相关链接 211
8.6 Support Resources 211
8.7 商标 211
8.8 静电放电警告 211
8.9 Glossary 211
9 机械、封装和可订购信息 212
9.1 封装信息 212

2 修订历史记录

Changes from November 16, 2018 to March 2, 2020 (from G Revision (November 2018) to H Revision) **Page**

- 节 1.1 （特性）：添加了“符合功能安全标准”特性 1
- 节 1.2 （应用）：更新了该部分。 2
- 节 1.3 （说明）：更新了该部分。 2
- 图 1-1 （功能方框图）：将 MRXx 更改为 MDRx 4
- Table 3-1 (Device Comparison): Added number of CLB tiles. 8
- Section 5.1 (Absolute Maximum Ratings): Changed "Input clamp current" condition from "Digital input (per pin), ..." to "Digital/analog input (per pin), ...". 50
- Section 5.1: Added footnote about continuous clamp current. 50
- Section 5.2 (ESD Ratings – Commercial): Added ANSI/ESDA/JEDEC JS-002 to charged-device model (CDM) 51
- Section 5.5.2 (Reducing Current Consumption): Updated list of methods for reducing the device current consumption. 56
- Section 5.6 (Electrical Characteristics): Added $V_{DDIO\text{-}POR}$ parameter. 57
- Section 5.9.1.5 (Supply Supervision): Added NOTE. 60
- 表 5-7 (Input Clock Frequency): Updated $f_{(X1)}$. 65
- 节 5.9.5 (Emulation/JTAG): Changed "emulator" to "debug probe". 71
- Table 5-38 (EMIF Asynchronous Memory Switching Characteristics): Updated Parameter 3 [$t_{c(EMRCYCLE)}$] and Parameter 15 [$t_{c(EMWCYCLE)}$]. 88
- 节 5.10 (Analog Peripheral): Updated feature about buffered DACs. 95
- 图 5-29 (Analog Subsystem Block Diagram (100-Pin PZP)): Updated ADC-A and ADC-B blocks by changing "16-bits or 12-bits (selectable)" to "12-bits". 98
- 节 5.10.1.2 (ADC Electrical Data and Timing): Added NOTE about keeping V_{REFHI} pin below V_{DDA} + 0.3 V to ensure proper functional operation. 103
- 表 5-51 (ADC Timings in 12-Bit Mode (SYSCLK Cycles)): Added footnote. 110
- 表 5-52 (ADC Timings in 16-Bit Mode): Added footnote. 112
- Table 5-54 (Comparator Electrical Characteristics): Updated description of "Power-up time" parameter. 117
- Table 5-54: Changed MAX Power-up time from 10 µs to 500 µs. Added footnote referencing the "Analog Bandgap References" advisory. 117
- Table 5-54: Added TEST CONDITION for "Input referred offset error". 117
- Table 5-54: Added Common Mode Rejection Ratio (CMRR). 117
- Table 5-55 (CMPSS DAC Static Electrical Characteristics): Added footnote about maximum output voltage. 119
- 节 5.10.3 (Buffered Digital-to-Analog Converter (DAC)): Updated section. 121
- 图 5-44 (DAC Module Block Diagram): Updated figure. 121
- 节 5.10.3.1 (Buffered DAC Electrical Data and Timing): Added NOTE about keeping V_{REFHI} pin below V_{DDA} + 0.3 V to ensure proper functional operation. 122
- Table 5-56 (Buffered DAC Electrical Characteristics): Updated description of "Power-up time" parameter. 122
- Table 5-56: Changed MAX Power-up time from 10 µs to 500 µs. Added footnote referencing the "Analog Bandgap References" advisory. 122
- Table 5-56: Changed "Trimmed offset error" to "Offset error". 122
- Table 5-56: Added TYP DNL value. 122
- Table 5-56: Added TYP INL value. 122
- Table 5-56: Changed description of R_{PD} to "R_{PD} pulldown resistor". 122
- Table 5-56: Changed "Reference load" to "Reference input resistance". 122
- Table 5-56: Updated footnote about typical values. 122
- Table 5-59 (ePWM Timing Requirements): Added $f_{(EPWM)}$ and associated footnote. 132
- Table 5-65 (High-Resolution PWM Timing Requirements): Added table. 137
- 节 5.11.5.2 (SDFM Electrical Data and Timing (Using 3-Sample GPIO Input Qualification)): Updated NOTE about the SDFM Qualified GPIO (3-sample) mode. 142
- 节 5.12.3.1.2 (McBSP as SPI Master or Slave Timing): Updated section. 153
- 图 5-65 (McBSP Timing as SPI Master or Slave: CLKSTP = 10b, CLKXP = 0): Updated M28. Added M26. 156
- 图 5-66 (McBSP Timing as SPI Master or Slave: CLKSTP = 11b, CLKXP = 0): Added M36. 156
- 图 5-67 (McBSP Timing as SPI Master or Slave: CLKSTP = 10b, CLKXP = 1): Updated M47. Added M45. 157
- 图 5-69 (SCI Block Diagram): Updated figure. 159
- 节 5.12.5.1 (SPI Electrical Data and Timing): Updated section. 163
- Table 5-77 (SPI Master Mode Timing Requirements): Updated table. 163
- Table 5-78 (SPI Master Mode Switching Characteristics (Clock Phase = 0)): Updated table. 163
- Table 5-79 (SPI Master Mode Switching Characteristics (Clock Phase = 1)): Updated table. 163

版权 © 2014–2020, Texas Instruments Incorporated

- Table 5-80 (SPI Slave Mode Timing Requirements): Updated table. 167
- Table 5-81 (SPI Slave Mode Switching Characteristics): Updated table. 167
- 图 5-75 (USB Block Diagram): Removed "USB PHY" label and left arrow that were above "USB FS/LS PHY". 169
- 图 6-1 (Functional Block Diagram): Changed MRXx to MDRx. 177
- 节 6.3.2 (Flash Memory Map): Updated Addresses of Flash Sectors on F28379S, F28378S, F28377S, and F28375S table. 179
- 节 6.3.2: Updated Addresses of Flash Sectors on F28376S and F28374S table. 179
- 节 6.9.1 (EMU Boot or Emulation Boot): Updated section. 196
- 表 6-14 (GPIO Pins Used by Each Peripheral Bootloader): Updated pin associations for GPIO28 and GPIO29. ... 197
- 节 6.14 (Configurable Logic Block (CLB)): Updated section. 201
- 图 6-5 (CLB Overview): Updated figure. 202
- 节 6.15 (Functional Safety): Added section. 203
- 节 7.1 (TI Reference Design): Changed section title from "TI Design or Reference Design" to "TI Reference Design". Updated section. 205
- 节 8 （器件和文档支持）：将“社区资源”部分更改为“支持资源”部分更新了该部分 206
- 节 8.3 （工具和软件）：更新了该部分。 208

3 Device Comparison

Table 3-1 lists the features of each 2837xS device.

Table 3-1. Device Comparison

FEATURE[(1)]		28379S			28378S		28377S			28376S			28375S			28374S		
Package Type (ZWT is an nFBGA package. PTP is an HLQFP package. PZP is an HTQFP package.)		**337-Ball ZWT**	**176-Pin PTP**	**100-Pin PZP**	**176-Pin PTP**	**100-Pin PZP**	**337-Ball ZWT**	**176-Pin PTP**	**100-Pin PZP**	**337-Ball ZWT**	**176-Pin PTP**	**100-Pin PZP**	**337-Ball ZWT**	**176-Pin PTP**	**100-Pin PZP**	**337-Ball ZWT**	**176-Pin PTP**	**100-Pin PZP**
Processor and Accelerators																		
C28x	Number	1																
	Frequency (MHz)	200																
	Floating-Point Unit (FPU)	Yes																
	VCU-II	Yes																
	TMU – Type 0	Yes																
CLA – Type 1	Number	1																
	Frequency (MHz)	200																
6-Channel DMA – Type 0		1																
Memory																		
Flash (16-bit words)		1MB (512KW)			1MB (512KW)		1MB (512KW)			512KB (256KW)			1MB (512KW)			512KB (256KW)		
RAM (16-bit words)	Dedicated and Local Shared RAM	36KB (18KW)																
	Global Shared RAM	128KB (64KW)			128KB (64KW)		128KB (64KW)			96KB (48KW)			128KB (64KW)			96KB (48KW)		
	Total RAM	**164KB (82KW)**			**164KB (82KW)**		**164KB (82KW)**			**132KB (66KW)**			**164KB (82KW)**			**132KB (66KW)**		
Code security for on-chip flash, RAM, and OTP blocks		Yes																
Boot ROM		Yes																
System																		
Configurable Logic Block (CLB)		4 tiles					No											
32-bit CPU timers		3																
Watchdog timers		1																
Nonmaskable Interrupt Watchdog (NMIWD) timers		1																
Crystal oscillator/External clock input		1																
0-pin internal oscillator		2																
I/O pins (shared)	GPIO	169	97	41	97	41	169	97	41	169	97	41	169	97	41	169	97	41
External interrupts		5																
EMIF	EMIF1 (16-bit or 32-bit)	1		–	1	–	1		–	1		–	1		–	1		–
	EMIF2 (16-bit)	1	–	–	–	–	1	–	–	1	–	–	1	–	–	1	–	–

(1) A type change represents a major functional feature difference in a peripheral module. Within a peripheral type, there may be minor differences between devices that do not affect the basic functionality of the module. For more information, see the *C2000 Real-Time Control Peripherals Reference Guide*.

Copyright © 2014–2020, Texas Instruments Incorporated

Table 3-1. Device Comparison (continued)

FEATURE[1]		28379S			28378S		28377S			28376S			28375S			28374S		
Package Type (ZWT is an nFBGA package. PTP is an HLQFP package. PZP is an HTQFP package.)		**337-Ball ZWT**	**176-Pin PTP**	**100-Pin PZP**	**176-Pin PTP**	**100-Pin PZP**	**337-Ball ZWT**	**176-Pin PTP**	**100-Pin PZP**	**337-Ball ZWT**	**176-Pin PTP**	**100-Pin PZP**	**337-Ball ZWT**	**176-Pin PTP**	**100-Pin PZP**	**337-Ball ZWT**	**176-Pin PTP**	**100-Pin PZP**
Analog Peripherals																		
ADC 16-bit mode	MSPS	1.1			–		1.1						–					
	Conversion Time (ns)[2]	915			–		915						–					
	Input pins	24	20	14	–		24	20	14	24	20	14	–					
	Channels (differential)	12	9	7	–		12	9	7	12	9	7	–					
ADC 12-bit mode	MSPS	3.5																
	Conversion Time (ns)[2]	280																
	Input pins	24	20	14	20	14	24	20	14	24	20	14	24	20	14	24	20	14
	Channels (single-ended)	24	20	14	20	14	24	20	14	24	20	14	24	20	14	24	20	14
Number of 16-bit or 12-bit ADCs		4		2	–		4		2	4		2	–					
Number of 12-bit only ADCs		–			4	2	–						4		2	4		2
Temperature sensor		1																
CMPSS (each CMPSS has two comparators and two internal DACs)		8		4	8	4	8		4	8		4	8		4	8		4
Buffered DAC		3																
Control Peripherals[3]																		
eCAP inputs – Type 0		6																
Enhanced Pulse Width Modulator (ePWM) channels – Type 4		24		15	24	15	24		15	24		15	24		15	24		15
eQEP modules – Type 0		3		2	3	2	3		2	3		2	3		2	3		2
High-resolution ePWM channels – Type 4		16		9	16	9	16		9	16		9	16		9	16		9
SDFM channels – Type 0		8		6	8	6	8		6	8		6	8		6	8		6
Communication Peripherals[3]																		
Controller Area Network (CAN) – Type 0[4]		2																
Inter-Integrated Circuit (I2C) – Type 0		2																
Multichannel Buffered Serial Port (McBSP) – Type 1		2																
Serial Communications Interface (SCI) – Type 0		4		3	4	3	4		3	4		3	4		3	4		3
Serial Peripheral Interface (SPI) – Type 2		3																
Universal Serial Bus (USB) – Type 0		1																
uPP – Type 0		1																
Temperature and Qualification																		
Junction Temperature (T_J)	T: –40°C to 105°C	Yes			No		Yes											
	S: –40°C to 125°C	Yes																
	Q: –40°C to 150°C[5]	No			No		Yes			No			No		Yes	No		
Free-Air Temperature (T_A)	Q: –40°C to 125°C[5]	No			No		Yes			No			No		Yes	No		

(2) Time between start of sample-and-hold window to start of sample-and-hold window of the next conversion.
(3) For devices that are available in more than one package, the peripheral count listed in the smaller package is reduced because the smaller package has less device pins available. The number of peripherals internally present on the device is not reduced compared to the largest package offered within a part number. See Section 4 to identify which peripheral instances are accessible on pins in the smaller package.
(4) The CAN module uses the IP known as *D_CAN*. This document uses the names *CAN* and *D_CAN* interchangeably to reference this peripheral.
(5) The letter Q refers to AEC Q100 qualification for automotive applications.

3.1 Related Products

For information about similar products, see the following links:

TMS320F2837xD Microcontrollers
The F2837xD series sets a new standard for performance with dual subsystems. Each subsystem consists of a C28x CPU and a parallel control law accelerator (CLA), each running at 200 MHz. Enhancing performance are TMU and VCU accelerators. New capabilities include multiple 16-bit/12-bit mode ADCs, DAC, Sigma-Delta filters, USB, configurable logic block (CLB), on-chip oscillators, and enhanced versions of all peripherals. The F2837xD is available with up to 1MB of Flash. It is available in a 176-pin QFP or 337-pin BGA package.

TMS320F2837xS Microcontrollers
The F2837xS series is a pin-to-pin compatible version of F2837xD but with only one C28x-CPU-and-CLA subsystem enabled. It is also available in a 100-pin QFP to enable compatibility with the TMS320F2807x series.

Copyright © 2014–2020, Texas Instruments Incorporated

4 Terminal Configuration and Functions

4.1 Pin Diagrams

Figure 4-1 to Figure 4-4 show the terminal assignments on the 337-ball ZWT New Fine Pitch Ball Grid Array. Each figure shows a quadrant of the terminal assignments. Figure 4-5 shows the pin assignments on the 176-pin PTP PowerPAD Thermally Enhanced Low-Profile Quad Flatpack. Figure 4-6 shows the pin assignments on the 100-pin PZP PowerPAD Thermally Enhanced Thin Quad Flatpack.

	1	2	3	4	5	6	7	8	9	10	
W	V_{SSA}	ADCINB1	ADCINB3	ADCINB5	V_{REFHIB}	V_{REFLOD}	V_{SS}	V_{DDIO}	GPIO128	GPIO116	W
V	V_{REFHIA}	ADCINB0	ADCINB2	ADCINB4	V_{REFHID}	V_{REFLOB}	V_{SSA}	GPIO124	GPIO127	GPIO131	V
U	ADCINA0	ADCINA2	ADCINA4	ADCIN15	ADCIND1	ADCIND3	ADCIND5	GPIO123	GPIO126	GPIO130	U
T	ADCINA1	ADCINA3	ADCINA5	ADCIN14	ADCIND0	ADCIND2	ADCIND4	GPIO122	GPIO125	GPIO129	T
R	V_{REFHIC}	V_{REFLOA}	ADCINC2	ADCINC4	V_{SSA}	V_{DDA}	V_{SS}	V_{SS}	V_{DDIO}	V_{DD}	R
P	V_{SSA}	V_{REFLOC}	ADCINC3	ADCINC5	V_{SSA}	V_{DDA}	V_{SS}	V_{SS}	V_{DDIO}	V_{DD}	P
N	V_{SS}	GPIO109	GPIO114	GPIO113	V_{SS}	V_{SS}	7 N	8	9	10	
M	V_{DDIO}	GPIO110	GPIO112	GPIO111	V_{DDIO}	V_{DDIO}	M	V_{SS}	V_{SS}	V_{SS}	M
L	GPIO27	GPIO106	GPIO107	GPIO108	V_{SS}	V_{SS}	L	V_{SS}	V_{SS}	V_{SS}	L
K	GPIO26	GPIO25	GPIO24	GPIO23	V_{DD}	V_{DD}	K	V_{SS}	V_{SS}	V_{SS}	K
	1	2	3	4	5	6		8	9	10	

A. Only the GPIO function is shown on GPIO terminals. See Table 4-1 for the complete, muxed signal name.

Figure 4-1. 337-Ball ZWT New Fine Pitch Ball Grid Array (Bottom View) – [Quadrant A]

	11	12	13	14	15	16	17	18	19	
W	GPIO29	FLT1	TDI	TMS	TDO	GPIO121	GPIO39	GPIO132	V_{SS}	W
V	GPIO28	GPIO115	FLT2	$\overline{TRST}$	TCK	GPIO36	GPIO40	GPIO134	V_{DDIO}	V
U	GPIO31	GPIO117	GPIO32	GPIO34	GPIO120	GPIO37	GPIO41	GPIO135	ERRORSTS	U
T	GPIO30	GPIO118	GPIO33	GPIO35	GPIO119	GPIO38	GPIO136	GPIO137	GPIO138	T
R	V_{DD3VFL}	V_{DD3VFL}	V_{DD}	V_{SS}	V_{SS}	GPIO48	GPIO49	GPIO50	GPIO51	R
P	V_{SS}	V_{SS}	V_{DD}	V_{SS}	V_{SS}	GPIO52	GPIO53	GPIO54	GPIO55	P
	11	12	13 N	V_{DDIO}	V_{DDIO}	GPIO56	GPIO58	GPIO57	GPIO139	N
M	V_{SS}	V_{SS}	M	V_{SS}	V_{SS}	GPIO59	GPIO60	GPIO141	GPIO140	M
L	V_{SS}	V_{SS}	L	V_{DDIO}	V_{DDIO}	GPIO61	GPIO64	V_{SS}	GPIO142	L
K	V_{SS}	V_{SS}	K	V_{SS}	V_{SS}	GPIO65	GPIO66	GPIO44	GPIO45	K
	11	12		14	15	16	17	18	19	

A. Only the GPIO function is shown on GPIO terminals. See Table 4-1 for the complete, muxed signal name.

Figure 4-2. 337-Ball ZWT New Fine Pitch Ball Grid Array (Bottom View) – [Quadrant B]

Copyright © 2014–2020, Texas Instruments Incorporated

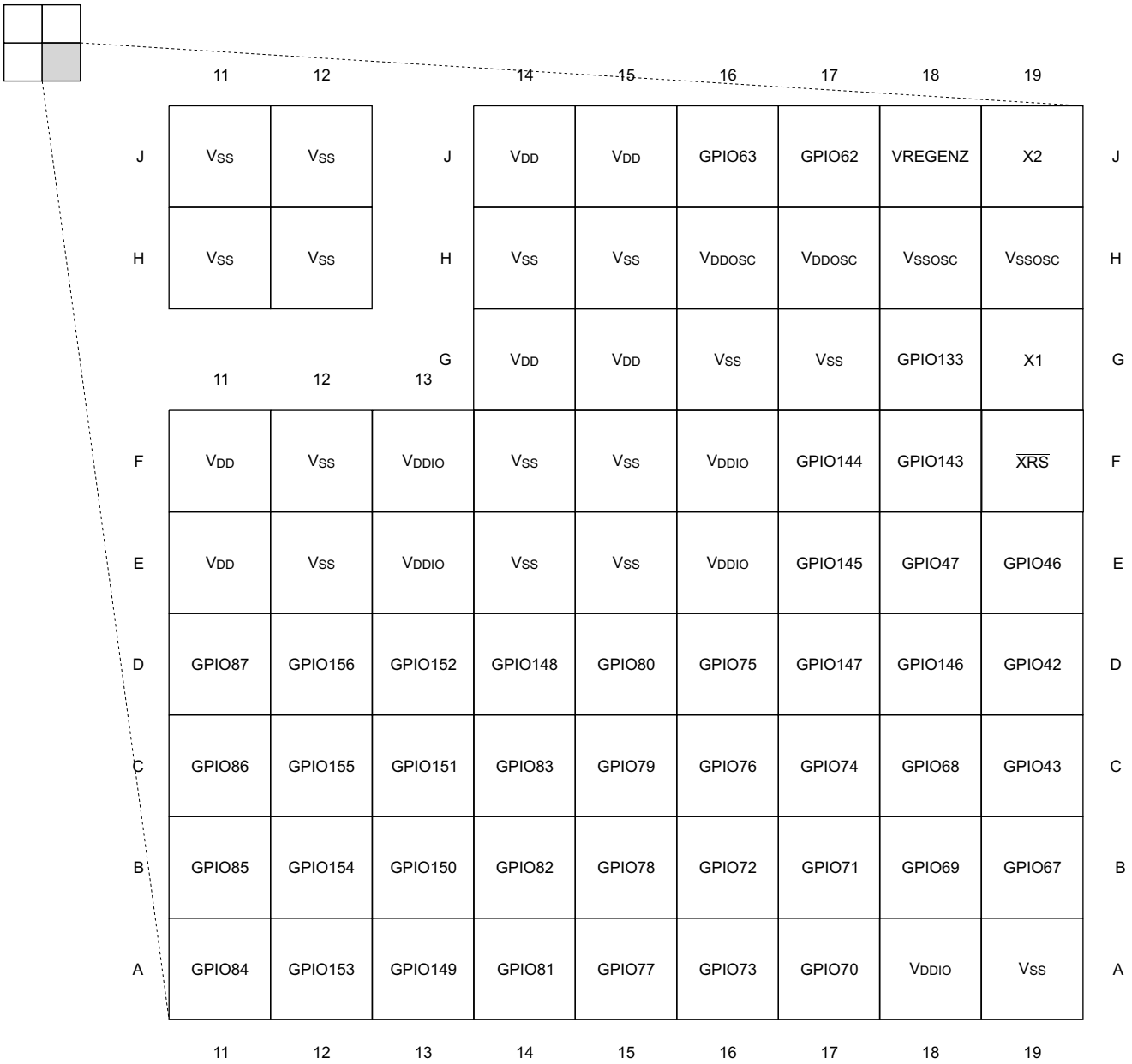

A. Only the GPIO function is shown on GPIO terminals. See Table 4-1 for the complete, muxed signal name.

Figure 4-3. 337-Ball ZWT New Fine Pitch Ball Grid Array (Bottom View) – [Quadrant C]

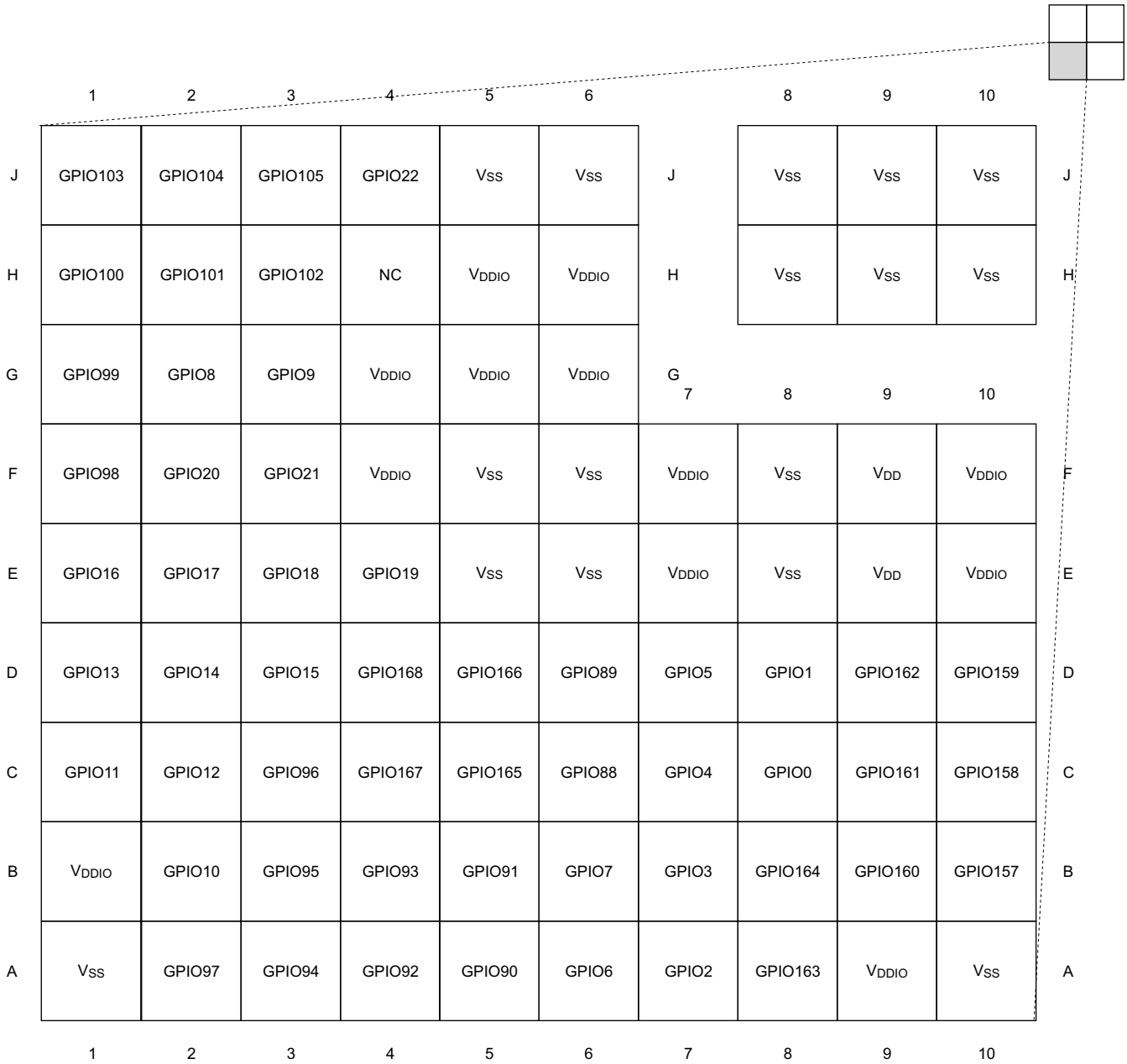

A. Only the GPIO function is shown on GPIO terminals. See Table 4-1 for the complete, muxed signal name.

Figure 4-4. 337-Ball ZWT New Fine Pitch Ball Grid Array (Bottom View) – [Quadrant D]

Copyright © 2014–2020, Texas Instruments Incorporated

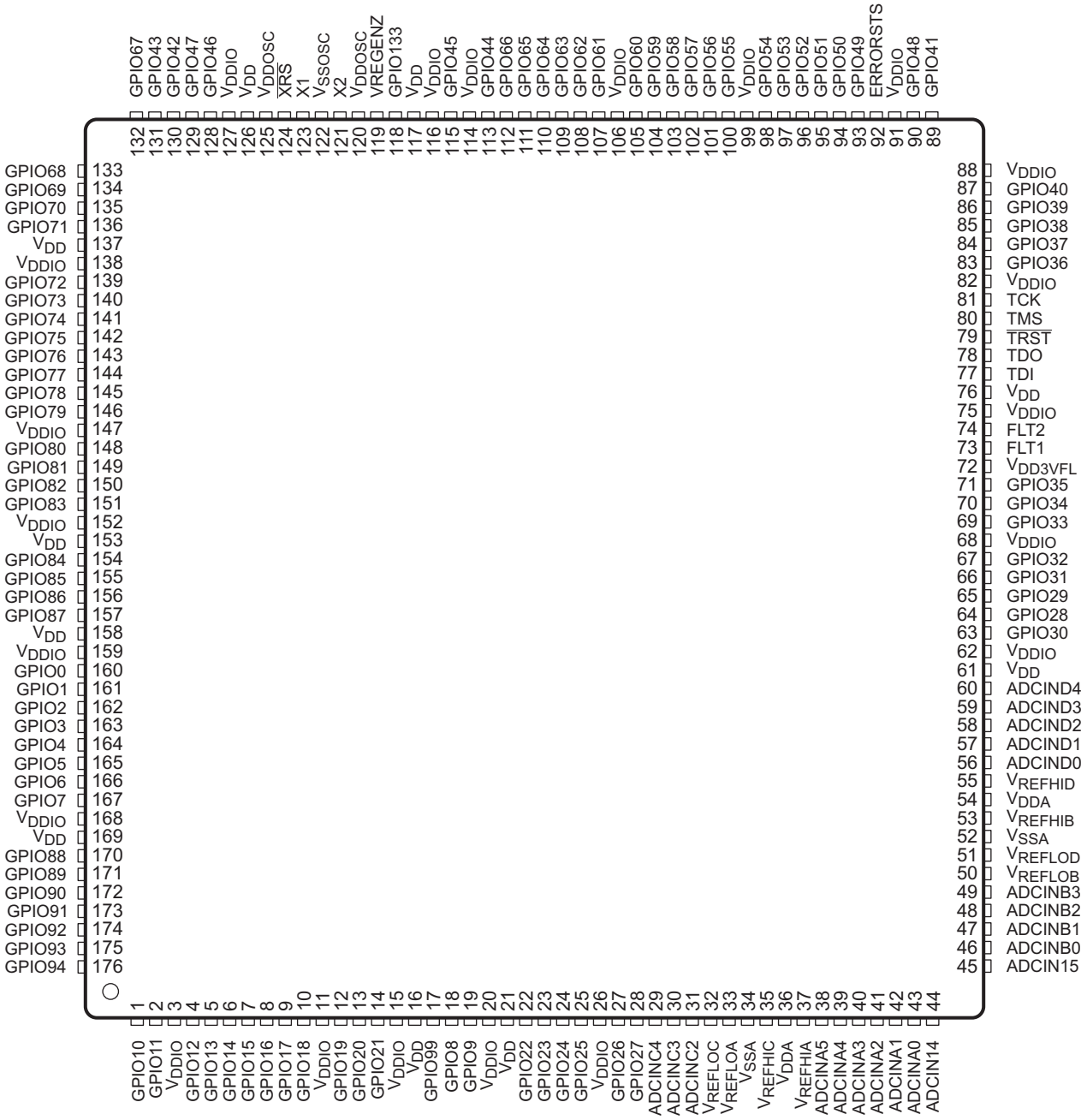

A. Only the GPIO function is shown on GPIO pins. See Table 4-1 for the complete, muxed signal name.

Figure 4-5. 176-Pin PTP PowerPAD Thermally Enhanced Low-Profile Quad Flatpack (Top View)

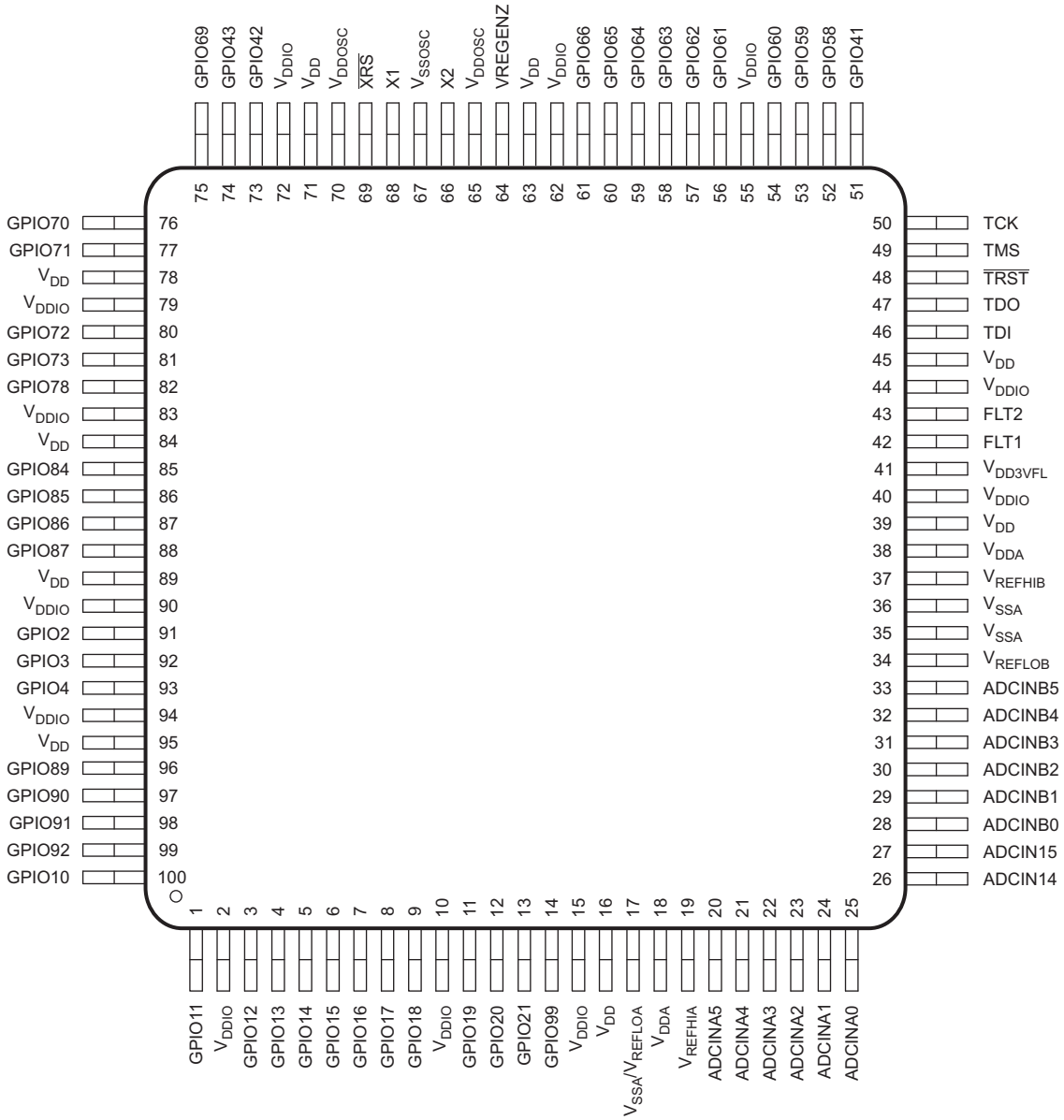

A. Only the GPIO function is shown on GPIO pins. See Table 4-1 for the complete, muxed signal name.

Figure 4-6. 100-Pin PZP PowerPAD HTQFP (Top View)

NOTE

The exposed lead frame die pad of the PowerPAD™ package serves two functions: to remove heat from the die and to provide ground path for the digital ground (analog ground is provided through dedicated pins). Thus, the PowerPAD should be soldered to the ground (GND) plane of the PCB because this will provide both the digital ground path and good thermal conduction path. To make optimum use of the thermal efficiencies designed into the PowerPAD package, the PCB must be designed with this technology in mind. A thermal land is required on the surface of the PCB directly underneath the body of the PowerPAD. The thermal land should be soldered to the exposed lead frame die pad of the PowerPAD package; the thermal land should be as large as needed to dissipate the required heat. An array of thermal vias should be used to connect the thermal pad to the internal GND plane of the board. See *PowerPAD™ Thermally Enhanced Package* for more details on using the PowerPAD package.

Copyright © 2014–2020, Texas Instruments Incorporated

NOTE

PCB footprints and schematic symbols are available for download in a vendor-neutral format, which can be exported to the leading EDA CAD/CAE design tools. See the CAD/CAE Symbols section in the product folder for each device, under the Packaging section. These footprints and symbols can also be searched for at http://webench.ti.com/cad/.

4.2 Signal Descriptions

Table 4-1 describes the signals. The GPIO function is the default at reset, unless otherwise mentioned. The peripheral signals that are listed under them are alternate functions. Some peripheral functions may not be available in all devices. See Table 3-1 for details. All GPIO pins are I/O/Z and have an internal pullup, which can be selectively enabled or disabled on a per-pin basis. This feature only applies to the GPIO pins. The pullups are not enabled at reset.

Table 4-1. Signal Descriptions

TERMINAL					I/O/Z[1]	DESCRIPTION
NAME	MUX POSITION	ZWT BALL NO.	PTP PIN NO.	PZP PIN NO.		
ADC, DAC, AND COMPARATOR SIGNALS						
V_{REFHIA}		V1	37	19	I	ADC-A high reference. This voltage must be driven into the pin from external circuitry. Place at least a 1-µF capacitor on this pin for the 12-bit mode, or at least a 22-µF capacitor for the 16-bit mode. This capacitor should be placed as close to the device as possible between the V_{REFHIA} and V_{REFLOA} pins. **NOTE:** Do not load this pin externally.
V_{REFHIB}		W5	53	37	I	ADC-B high reference. This voltage must be driven into the pin from external circuitry. Place at least a 1-µF capacitor on this pin for the 12-bit mode, or at least a 22-µF capacitor for the 16-bit mode. This capacitor should be placed as close to the device as possible between the V_{REFHIB} and V_{REFLOB} pins. **NOTE:** Do not load this pin externally.
V_{REFHIC}		R1	35	–	I	ADC-C high reference. This voltage must be driven into the pin from external circuitry. Place at least a 1-µF capacitor on this pin for the 12-bit mode, or at least a 22-µF capacitor for the 16-bit mode. This capacitor should be placed as close to the device as possible between the V_{REFHIC} and V_{REFLOC} pins. **NOTE:** Do not load this pin externally.
V_{REFHID}		V5	55	–	I	ADC-D high reference. This voltage must be driven into the pin from external circuitry. Place at least a 1-µF capacitor on this pin for the 12-bit mode, or at least a 22-µF capacitor for the 16-bit mode. This capacitor should be placed as close to the device as possible between the V_{REFHID} and V_{REFLOD} pins. **NOTE:** Do not load this pin externally.
V_{REFLOA}		R2	33	17	I	ADC-A low reference. On the PZP package, pin 17 is double-bonded to V_{SSA} and V_{REFLOA}. On the PZP package, pin 17 must be connected to V_{SSA} on the system board.
V_{REFLOB}		V6	50	34	I	ADC-B low reference
V_{REFLOC}		P2	32	–	I	ADC-C low reference
V_{REFLOD}		W6	51	–	I	ADC-D low reference
ADCIN14		T4	44	26	I	Input 14 to all ADCs. This pin can be used as a general-purpose ADCIN pin or it can be used to calibrate all ADCs together (either single-ended or differential) from an external reference.
CMPIN4P					I	Comparator 4 positive input
ADCIN15		U4	45	27	I	Input 15 to all ADCs. This pin can be used as a general-purpose ADCIN pin or it can be used to calibrate all ADCs together (either single-ended or differential) from an external reference.
CMPIN4N					I	Comparator 4 negative input

Copyright © 2014–2020, Texas Instruments Incorporated

Table 4-1. Signal Descriptions (continued)

TERMINAL					I/O/Z[1]	DESCRIPTION
NAME	MUX POSITION	ZWT BALL NO.	PTP PIN NO.	PZP PIN NO.		
ADCINA0		U1	43	25	I	ADC-A input 0. There is a 50-kΩ internal pulldown on this pin in both an ADC input or DAC output mode which cannot be disabled.
DACOUTA					O	DAC-A output
ADCINA1		T1	42	24	I	ADC-A input 1. There is a 50-kΩ internal pulldown on this pin in both an ADC input or DAC output mode which cannot be disabled.
DACOUTB					O	DAC-B output
ADCINA2		U2	41	23	I	ADC-A input 2
CMPIN1P					I	Comparator 1 positive input
ADCINA3		T2	40	22	I	ADC-A input 3
CMPIN1N					I	Comparator 1 negative input
ADCINA4		U3	39	21	I	ADC-A input 4
CMPIN2P					I	Comparator 2 positive input
ADCINA5		T3	38	20	I	ADC-A input 5
CMPIN2N					I	Comparator 2 negative input
ADCINB0		V2	46	28	I	ADC-B input 0. There is a 100-pF capacitor to V_{SSA} on this pin in both ADC input or DAC reference mode which cannot be disabled. If this pin is being used as a reference for the on-chip DACs, place at least a 1-µF capacitor on this pin.
VDAC					I	Optional external reference voltage for on-chip DACs. There is a 100-pF capacitor to V_{SSA} on this pin in both ADC input or DAC reference mode which cannot be disabled. If this pin is being used as a reference for the on-chip DACs, place at least a 1-µF capacitor on this pin.
ADCINB1		W2	47	29	I	ADC-B input 1. There is a 50-kΩ internal pulldown on this pin in both an ADC input or DAC output mode which cannot be disabled.
DACOUTC					O	DAC-C output
ADCINB2		V3	48	30	I	ADC-B input 2
CMPIN3P					I	Comparator 3 positive input
ADCINB3		W3	49	31	I	ADC-B input 3
CMPIN3N					I	Comparator 3 negative input
ADCINB4		V4	–	32	I	ADC-B input 4
ADCINB5		W4	–	33	I	ADC-B input 5
ADCINC2		R3	31	–	I	ADC-C input 2
CMPIN6P					I	Comparator 6 positive input
ADCINC3		P3	30	–	I	ADC-C input 3
CMPIN6N					I	Comparator 6 negative input
ADCINC4		R4	29	–	I	ADC-C input 4
CMPIN5P					I	Comparator 5 positive input
ADCINC5		P4	–	–	I	ADC-C input 5
CMPIN5N					I	Comparator 5 negative input
ADCIND0		T5	56	–	I	ADC-D input 0
CMPIN7P					I	Comparator 7 positive input
ADCIND1		U5	57	–	I	ADC-D input 1
CMPIN7N					I	Comparator 7 negative input

Table 4-1. Signal Descriptions (continued)

TERMINAL					I/O/Z[1]	DESCRIPTION
NAME	MUX POSITION	ZWT BALL NO.	PTP PIN NO.	PZP PIN NO.		
ADCIND2		T6	58	–	I	ADC-D input 2
CMPIN8P					I	Comparator 8 positive input
ADCIND3		U6	59	–	I	ADC-D input 3
CMPIN8N					I	Comparator 8 negative input
ADCIND4		T7	60	–	I	ADC-D input 4
ADCIND5		U7	–	–	I	ADC-D input 5
GPIO AND PERIPHERAL SIGNALS						
GPIO0	0, 4, 8, 12	C8	160	–	I/O	General-purpose input/output 0
EPWM1A	1				O	Enhanced PWM1 output A (HRPWM-capable)
SDAA	6				I/OD	I2C-A data open-drain bidirectional port
GPIO1	0, 4, 8, 12	D8	161	–	I/O	General-purpose input/output 1
EPWM1B	1				O	Enhanced PWM1 output B (HRPWM-capable)
MFSRB	3				I/O	McBSP-B receive frame synch
SCLA	6				I/OD	I2C-A clock open-drain bidirectional port
GPIO2	0, 4, 8, 12	A7	162	91	I/O	General-purpose input/output 2
EPWM2A	1				O	Enhanced PWM2 output A (HRPWM-capable)
OUTPUTXBAR1	5				O	Output 1 of the output XBAR
SDAB	6				I/OD	I2C-B data open-drain bidirectional port
GPIO3	0, 4, 8, 12	B7	163	92	I/O	General-purpose input/output 3
EPWM2B	1				O	Enhanced PWM2 output B (HRPWM-capable)
OUTPUTXBAR2	2				O	Output 2 of the output XBAR
MCLKRB	3				I/O	McBSP-B receive clock
OUTPUTXBAR2	5				O	Output 2 of the output XBAR
SCLB	6				I/OD	I2C-B clock open-drain bidirectional port
GPIO4	0, 4, 8, 12	C7	164	93	I/O	General-purpose input/output 4
EPWM3A	1				O	Enhanced PWM3 output A (HRPWM-capable)
OUTPUTXBAR3	5				O	Output 3 of the output XBAR
CANTXA	6				O	CAN-A transmit
GPIO5	0, 4, 8, 12	D7	165	–	I/O	General-purpose input/output 5
EPWM3B	1				O	Enhanced PWM3 output B (HRPWM-capable)
MFSRA	2				I/O	McBSP-A receive frame synch
OUTPUTXBAR3	3				O	Output 3 of the output XBAR
CANRXA	6				I	CAN-A receive
GPIO6	0, 4, 8, 12	A6	166	–	I/O	General-purpose input/output 6
EPWM4A	1				O	Enhanced PWM4 output A (HRPWM-capable)
OUTPUTXBAR4	2				O	Output 4 of the output XBAR
EXTSYNCOUT	3				O	External ePWM synch pulse output
EQEP3A	5				I	Enhanced QEP3 input A
CANTXB	6				O	CAN-B transmit
GPIO7	0, 4, 8, 12	B6	167	–	I/O	General-purpose input/output 7
EPWM4B	1				O	Enhanced PWM4 output B (HRPWM-capable)
MCLKRA	2				I/O	McBSP-A receive clock
OUTPUTXBAR5	3				O	Output 5 of the output XBAR
EQEP3B	5				I	Enhanced QEP3 input B
CANRXB	6				I	CAN-B receive

Copyright © 2014–2020, Texas Instruments Incorporated

Table 4-1. Signal Descriptions (continued)

TERMINAL					I/O/Z[1]	DESCRIPTION
NAME	MUX POSITION	ZWT BALL NO.	PTP PIN NO.	PZP PIN NO.		
GPIO8	0, 4, 8, 12	G2	18	–	I/O	General-purpose input/output 8
EPWM5A	1				O	Enhanced PWM5 output A (HRPWM-capable)
CANTXB	2				O	CAN-B transmit
ADCSOCAO	3				O	ADC start-of-conversion A output for external ADC
EQEP3S	5				I/O	Enhanced QEP3 strobe
SCITXDA	6				O	SCI-A transmit data
GPIO9	0, 4, 8, 12	G3	19	–	I/O	General-purpose input/output 9
EPWM5B	1				O	Enhanced PWM5 output B (HRPWM-capable)
SCITXDB	2				O	SCI-B transmit data
OUTPUTXBAR6	3				O	Output 6 of the output XBAR
EQEP3I	5				I/O	Enhanced QEP3 index
SCIRXDA	6				I	SCI-A receive data
GPIO10	0, 4, 8, 12	B2	1	100	I/O	General-purpose input/output 10
EPWM6A	1				O	Enhanced PWM6 output A (HRPWM-capable)
CANRXB	2				I	CAN-B receive
ADCSOCBO	3				O	ADC start-of-conversion B output for external ADC
EQEP1A	5				I	Enhanced QEP1 input A
SCITXDB	6				O	SCI-B transmit data
UPP-WAIT	15				I/O	Universal parallel port wait. Receiver asserts to request a pause in transfer.
GPIO11	0, 4, 8, 12	C1	2	1	I/O	General-purpose input/output 11
EPWM6B	1				O	Enhanced PWM6 output B (HRPWM-capable)
SCIRXDB	2, 6				I	SCI-B receive data
OUTPUTXBAR7	3				O	Output 7 of the output XBAR
EQEP1B	5				I	Enhanced QEP1 input B
UPP-START	15				I/O	Universal parallel port start. Transmitter asserts at start of DMA line.
GPIO12	0, 4, 8, 12	C2	4	3	I/O	General-purpose input/output 12
EPWM7A	1				O	Enhanced PWM7 output A (HRPWM-capable)
CANTXB	2				O	CAN-B transmit
MDXB	3				O	McBSP-B transmit serial data
EQEP1S	5				I/O	Enhanced QEP1 strobe
SCITXDC	6				O	SCI-C transmit data
UPP-ENA	15				I/O	Universal parallel port enable. Transmitter asserts while data bus is active.
GPIO13	0, 4, 8, 12	D1	5	4	I/O	General-purpose input/output 13
EPWM7B	1				O	Enhanced PWM7 output B (HRPWM-capable)
CANRXB	2				I	CAN-B receive
MDRB	3				I	McBSP-B receive serial data
EQEP1I	5				I/O	Enhanced QEP1 index
SCIRXDC	6				I	SCI-C receive data
UPP-D7	15				I/O	Universal parallel port data line 7

Copyright © 2014–2020, Texas Instruments Incorporated

Table 4-1. Signal Descriptions (continued)

TERMINAL					I/O/Z[1]	DESCRIPTION
NAME	MUX POSITION	ZWT BALL NO.	PTP PIN NO.	PZP PIN NO.		
GPIO14	0, 4, 8, 12	D2	6	5	I/O	General-purpose input/output 14
EPWM8A	1				O	Enhanced PWM8 output A (HRPWM-capable)
SCITXDB	2				O	SCI-B transmit data
MCLKXB	3				I/O	McBSP-B transmit clock
OUTPUTXBAR3	6				O	Output 3 of the output XBAR
UPP-D6	15				I/O	Universal parallel port data line 6
GPIO15	0, 4, 8, 12	D3	7	6	I/O	General-purpose input/output 15
EPWM8B	1				O	Enhanced PWM8 output B (HRPWM-capable)
SCIRXDB	2				I	SCI-B receive data
MFSXB	3				I/O	McBSP-B transmit frame synch
OUTPUTXBAR4	6				O	Output 4 of the output XBAR
UPP-D5	15				I/O	Universal parallel port data line 5
GPIO16	0, 4, 8, 12	E1	8	7	I/O	General-purpose input/output 16
SPISIMOA	1				I/O	SPI-A slave in, master out
CANTXB	2				O	CAN-B transmit
OUTPUTXBAR7	3				O	Output 7 of the output XBAR
EPWM9A	5				O	Enhanced PWM9 output A
SD1_D1	7				I	Sigma-Delta 1 channel 1 data input
UPP-D4	15				I/O	Universal parallel port data line 4
GPIO17	0, 4, 8, 12	E2	9	8	I/O	General-purpose input/output 17
SPISOMIA	1				I/O	SPI-A slave out, master in
CANRXB	2				I	CAN-B receive
OUTPUTXBAR8	3				O	Output 8 of the output XBAR
EPWM9B	5				O	Enhanced PWM9 output B
SD1_C1	7				I	Sigma-Delta 1 channel 1 clock input
UPP-D3	15				I/O	Universal parallel port data line 3
GPIO18	0, 4, 8, 12	E3	10	9	I/O	General-purpose input/output 18
SPICLKA	1				I/O	SPI-A clock
SCITXDB	2				O	SCI-B transmit data
CANRXA	3				I	CAN-A receive
EPWM10A	5				O	Enhanced PWM10 output A
SD1_D2	7				I	Sigma-Delta 1 channel 2 data input
UPP-D2	15				I/O	Universal parallel port data line 2
GPIO19	0, 4, 8, 12	E4	12	11	I/O	General-purpose input/output 19
$\overline{\text{SPISTEA}}$	1				I/O	SPI-A slave transmit enable
SCIRXDB	2				I	SCI-B receive data
CANTXA	3				O	CAN-A transmit
EPWM10B	5				O	Enhanced PWM10 output B
SD1_C2	7				I	Sigma-Delta 1 channel 2 clock input
UPP-D1	15				I/O	Universal parallel port data line 1

Copyright © 2014–2020, Texas Instruments Incorporated

Table 4-1. Signal Descriptions (continued)

TERMINAL					I/O/Z[1]	DESCRIPTION
NAME	MUX POSITION	ZWT BALL NO.	PTP PIN NO.	PZP PIN NO.		
GPIO20	0, 4, 8, 12	F2	13	12	I/O	General-purpose input/output 20
EQEP1A	1				I	Enhanced QEP1 input A
MDXA	2				O	McBSP-A transmit serial data
CANTXB	3				O	CAN-B transmit
EPWM11A	5				O	Enhanced PWM11 output A
SD1_D3	7				I	Sigma-Delta 1 channel 3 data input
UPP-D0	15				I/O	Universal parallel port data line 0
GPIO21	0, 4, 8, 12	F3	14	13	I/O	General-purpose input/output 21
EQEP1B	1				I	Enhanced QEP1 input B
MDRA	2				I	McBSP-A receive serial data
CANRXB	3				I	CAN-B receive
EPWM11B	5				O	Enhanced PWM11 output B
SD1_C3	7				I	Sigma-Delta 1 channel 3 clock input
UPP-CLK	15				I/O	Universal parallel port transmit clock
GPIO22	0, 4, 8, 12	J4	22	–	I/O	General-purpose input/output 22
EQEP1S	1				I/O	Enhanced QEP1 strobe
MCLKXA	2				I/O	McBSP-A transmit clock
SCITXDB	3				O	SCI-B transmit data
EPWM12A	5				O	Enhanced PWM12 output A
SPICLKB	6				I/O	SPI-B clock
SD1_D4	7				I	Sigma-Delta 1 channel 4 data input
GPIO23	0, 4, 8, 12	K4	23	–	I/O	General-purpose input/output 23
EQEP1I	1				I/O	Enhanced QEP1 index
MFSXA	2				I/O	McBSP-A transmit frame synch
SCIRXDB	3				I	SCI-B receive data
EPWM12B	5				O	Enhanced PWM12 output B
$\overline{\text{SPISTEB}}$	6				I/O	SPI-B slave transmit enable
SD1_C4	7				I	Sigma-Delta 1 channel 4 clock input
GPIO24	0, 4, 8, 12	K3	24	–	I/O	General-purpose input/output 24
OUTPUTXBAR1	1				O	Output 1 of the output XBAR
EQEP2A	2				I	Enhanced QEP2 input A
MDXB	3				O	McBSP-B transmit serial data
SPISIMOB	6				I/O	SPI-B slave in, master out
SD2_D1	7				I	Sigma-Delta 2 channel 1 data input
GPIO25	0, 4, 8, 12	K2	25	–	I/O	General-purpose input/output 25
OUTPUTXBAR2	1				O	Output 2 of the output XBAR
EQEP2B	2				I	Enhanced QEP2 input B
MDRB	3				I	McBSP-B receive serial data
SPISOMIB	6				I/O	SPI-B slave out, master in
SD2_C1	7				I	Sigma-Delta 2 channel 1 clock input

Table 4-1. Signal Descriptions (continued)

TERMINAL					I/O/Z[1]	DESCRIPTION
NAME	MUX POSITION	ZWT BALL NO.	PTP PIN NO.	PZP PIN NO.		
GPIO26	0, 4, 8, 12	K1	27	–	I/O	General-purpose input/output 26
OUTPUTXBAR3	1				O	Output 3 of the output XBAR
EQEP2I	2				I/O	Enhanced QEP2 index
MCLKXB	3				I/O	McBSP-B transmit clock
OUTPUTXBAR3	5				O	Output 3 of the output XBAR
SPICLKB	6				I/O	SPI-B clock
SD2_D2	7				I	Sigma-Delta 2 channel 2 data input
GPIO27	0, 4, 8, 12	L1	28	–	I/O	General-purpose input/output 27
OUTPUTXBAR4	1				O	Output 4 of the output XBAR
EQEP2S	2				I/O	Enhanced QEP2 strobe
MFSXB	3				I/O	McBSP-B transmit frame synch
OUTPUTXBAR4	5				O	Output 4 of the output XBAR
$\overline{\text{SPISTEB}}$	6				I/O	SPI-B slave transmit enable
SD2_C2	7				I	Sigma-Delta 2 channel 2 clock input
GPIO28	0, 4, 8, 12	V11	64	–	I/O	General-purpose input/output 28
SCIRXDA	1				I	SCI-A receive data
$\overline{\text{EM1CS4}}$	2				O	External memory interface 1 chip select 4
OUTPUTXBAR5	5				O	Output 5 of the output XBAR
EQEP3A	6				I	Enhanced QEP3 input A
SD2_D3	7				I	Sigma-Delta 2 channel 3 data input
GPIO29	0, 4, 8, 12	W11	65	–	I/O	General-purpose input/output 29
SCITXDA	1				O	SCI-A transmit data
EM1SDCKE	2				O	External memory interface 1 SDRAM clock enable
OUTPUTXBAR6	5				O	Output 6 of the output XBAR
EQEP3B	6				I	Enhanced QEP3 input B
SD2_C3	7				I	Sigma-Delta 2 channel 3 clock input
GPIO30	0, 4, 8, 12	T11	63	–	I/O	General-purpose input/output 30
CANRXA	1				I	CAN-A receive
EM1CLK	2				O	External memory interface 1 clock
OUTPUTXBAR7	5				O	Output 7 of the output XBAR
EQEP3S	6				I/O	Enhanced QEP3 strobe
SD2_D4	7				I	Sigma-Delta 2 channel 4 data input
GPIO31	0, 4, 8, 12	U11	66	–	I/O	General-purpose input/output 31
CANTXA	1				O	CAN-A transmit
$\overline{\text{EM1WE}}$	2				O	External memory interface 1 write enable
OUTPUTXBAR8	5				O	Output 8 of the output XBAR
EQEP3I	6				I/O	Enhanced QEP3 index
SD2_C4	7				I	Sigma-Delta 2 channel 4 clock input
GPIO32	0, 4, 8, 12	U13	67	–	I/O	General-purpose input/output 32
SDAA	1				I/OD	I2C-A data open-drain bidirectional port
$\overline{\text{EM1CS0}}$	2				O	External memory interface 1 chip select 0
GPIO33	0, 4, 8, 12	T13	69	–	I/O	General-purpose input/output 33
SCLA	1				I/OD	I2C-A clock open-drain bidirectional port
EM1RNW	2				O	External memory interface 1 read not write

Copyright © 2014–2020, Texas Instruments Incorporated

Table 4-1. Signal Descriptions (continued)

TERMINAL					I/O/Z[1]	DESCRIPTION
NAME	MUX POSITION	ZWT BALL NO.	PTP PIN NO.	PZP PIN NO.		
GPIO34	0, 4, 8, 12	U14	70	–	I/O	General-purpose input/output 34
OUTPUTXBAR1	1				O	Output 1 of the output XBAR
$\overline{\text{EM1CS2}}$	2				O	External memory interface 1 chip select 2
SDAB	6				I/OD	I2C-B data open-drain bidirectional port
GPIO35	0, 4, 8, 12	T14	71	–	I/O	General-purpose input/output 35
SCIRXDA	1				I	SCI-A receive data
$\overline{\text{EM1CS3}}$	2				O	External memory interface 1 chip select 3
SCLB	6				I/OD	I2C-B clock open-drain bidirectional port
GPIO36	0, 4, 8, 12	V16	83	–	I/O	General-purpose input/output 36
SCITXDA	1				O	SCI-A transmit data
EM1WAIT	2				I	External memory interface 1 Asynchronous SRAM WAIT
CANRXA	6				I	CAN-A receive
GPIO37	0, 4, 8, 12	U16	84	–	I/O	General-purpose input/output 37
OUTPUTXBAR2	1				O	Output 2 of the output XBAR
$\overline{\text{EM1OE}}$	2				O	External memory interface 1 output enable
CANTXA	6				O	CAN-A transmit
GPIO38	0, 4, 8, 12	T16	85	–	I/O	General-purpose input/output 38
EM1A0	2				O	External memory interface 1 address line 0
SCITXDC	5				O	SCI-C transmit data
CANTXB	6				O	CAN-B transmit
GPIO39	0, 4, 8, 12	W17	86	–	I/O	General-purpose input/output 39
EM1A1	2				O	External memory interface 1 address line 1
SCIRXDC	5				I	SCI-C receive data
CANRXB	6				I	CAN-B receive
GPIO40	0, 4, 8, 12	V17	87	–	I/O	General-purpose input/output 40
EM1A2	2				O	External memory interface 1 address line 2
SDAB	6				I/OD	I2C-B data open-drain bidirectional port
GPIO41	0, 4, 8, 12	U17	89	51	I/O	General-purpose input/output 41. For applications using the Hibernate low-power mode, this pin serves as the $\overline{\text{GPIOHIBWAKE}}$ signal. For details, see the Low Power Modes section of the System Control chapter in the *TMS320F2837xS Microcontrollers Technical Reference Manual*.
EM1A3	2				O	External memory interface 1 address line 3
SCLB	6				I/OD	I2C-B clock open-drain bidirectional port
GPIO42	0, 4, 8, 12	D19	130	73	I/O	General-purpose input/output 42
SDAA	6				I/OD	I2C-A data open-drain bidirectional port
SCITXDA	15				O	SCI-A transmit data
USB0DM	Analog				I/O	USB PHY differential data
GPIO43	0, 4, 8, 12	C19	131	74	I/O	General-purpose input/output 43
SCLA	6				I/OD	I2C-A clock open-drain bidirectional port
SCIRXDA	15				I	SCI-A receive data
USB0DP	Analog				I/O	USB PHY differential data
GPIO44	0, 4, 8, 12	K18	113	–	I/O	General-purpose input/output 44
EM1A4	2				O	External memory interface 1 address line 4

Table 4-1. Signal Descriptions (continued)

TERMINAL					I/O/Z[1]	DESCRIPTION
NAME	MUX POSITION	ZWT BALL NO.	PTP PIN NO.	PZP PIN NO.		
GPIO45	0, 4, 8, 12	K19	115	–	I/O	General-purpose input/output 45
EM1A5	2				O	External memory interface 1 address line 5
GPIO46	0, 4, 8, 12	E19	128	–	I/O	General-purpose input/output 46
EM1A6	2				O	External memory interface 1 address line 6
SCIRXDD	6				I	SCI-D receive data
GPIO47	0, 4, 8, 12	E18	129	–	I/O	General-purpose input/output 47
EM1A7	2				O	External memory interface 1 address line 7
SCITXDD	6				O	SCI-D transmit data
GPIO48	0, 4, 8, 12	R16	90	–	I/O	General-purpose input/output 48
OUTPUTXBAR3	1				O	Output 3 of the output XBAR
EM1A8	2				O	External memory interface 1 address line 8
SCITXDA	6				O	SCI-A transmit data
SD1_D1	7				I	Sigma-Delta 1 channel 1 data input
GPIO49	0, 4, 8, 12	R17	93	–	I/O	General-purpose input/output 49
OUTPUTXBAR4	1				O	Output 4 of the output XBAR
EM1A9	2				O	External memory interface 1 address line 9
SCIRXDA	6				I	SCI-A receive data
SD1_C1	7				I	Sigma-Delta 1 channel 1 clock input
GPIO50	0, 4, 8, 12	R18	94	–	I/O	General-purpose input/output 50
EQEP1A	1				I	Enhanced QEP1 input A
EM1A10	2				O	External memory interface 1 address line 10
SPISIMOC	6				I/O	SPI-C slave in, master out
SD1_D2	7				I	Sigma-Delta 1 channel 2 data input
GPIO51	0, 4, 8, 12	R19	95	–	I/O	General-purpose input/output 51
EQEP1B	1				I	Enhanced QEP1 input B
EM1A11	2				O	External memory interface 1 address line 11
SPISOMIC	6				I/O	SPI-C slave out, master in
SD1_C2	7				I	Sigma-Delta 1 channel 2 clock input
GPIO52	0, 4, 8, 12	P16	96	–	I/O	General-purpose input/output 52
EQEP1S	1				I/O	Enhanced QEP1 strobe
EM1A12	2				O	External memory interface 1 address line 12
SPICLKC	6				I/O	SPI-C clock
SD1_D3	7				I	Sigma-Delta 1 channel 3 data input
GPIO53	0, 4, 8, 12	P17	97	–	I/O	General-purpose input/output 53
EQEP1I	1				I/O	Enhanced QEP1 index
EM1D31	2				I/O	External memory interface 1 data line 31
EM2D15	3				I/O	External memory interface 2 data line 15
$\overline{\text{SPISTEC}}$	6				I/O	SPI-C slave transmit enable
SD1_C3	7				I	Sigma-Delta 1 channel 3 clock input

Copyright © 2014–2020, Texas Instruments Incorporated

Table 4-1. Signal Descriptions (continued)

TERMINAL					I/O/Z[1]	DESCRIPTION
NAME	MUX POSITION	ZWT BALL NO.	PTP PIN NO.	PZP PIN NO.		
GPIO54	0, 4, 8, 12	P18	98	–	I/O	General-purpose input/output 54
SPISIMOA	1				I/O	SPI-A slave in, master out
EM1D30	2				I/O	External memory interface 1 data line 30
EM2D14	3				I/O	External memory interface 2 data line 14
EQEP2A	5				I	Enhanced QEP2 input A
SCITXDB	6				O	SCI-B transmit data
SD1_D4	7				I	Sigma-Delta 1 channel 4 data input
GPIO55	0, 4, 8, 12	P19	100	–	I/O	General-purpose input/output 55
SPISOMIA	1				I/O	SPI-A slave out, master in
EM1D29	2				I/O	External memory interface 1 data line 29
EM2D13	3				I/O	External memory interface 2 data line 13
EQEP2B	5				I	Enhanced QEP2 input B
SCIRXDB	6				I	SCI-B receive data
SD1_C4	7				I	Sigma-Delta 1 channel 4 clock input
GPIO56	0, 4, 8, 12	N16	101	–	I/O	General-purpose input/output 56
SPICLKA	1				I/O	SPI-A clock
EM1D28	2				I/O	External memory interface 1 data line 28
EM2D12	3				I/O	External memory interface 2 data line 12
EQEP2S	5				I/O	Enhanced QEP2 strobe
SCITXDC	6				O	SCI-C transmit data
SD2_D1	7				I	Sigma-Delta 2 channel 1 data input
GPIO57	0, 4, 8, 12	N18	102	–	I/O	General-purpose input/output 57
$\overline{\text{SPISTEA}}$	1				I/O	SPI-A slave transmit enable
EM1D27	2				I/O	External memory interface 1 data line 27
EM2D11	3				I/O	External memory interface 2 data line 11
EQEP2I	5				I/O	Enhanced QEP2 index
SCIRXDC	6				I	SCI-C receive data
SD2_C1	7				I	Sigma-Delta 2 channel 1 clock input
GPIO58	0, 4, 8, 12	N17	103	52	I/O	General-purpose input/output 58
MCLKRA	1				I/O	McBSP-A receive clock
EM1D26	2				I/O	External memory interface 1 data line 26
EM2D10	3				I/O	External memory interface 2 data line 10
OUTPUTXBAR1	5				O	Output 1 of the output XBAR
SPICLKB	6				I/O	SPI-B clock
SD2_D2	7				I	Sigma-Delta 2 channel 2 data input
SPISIMOA	15				I/O	SPI-A slave in, master out[2]
GPIO59	0, 4, 8, 12	M16	104	53	I/O	General-purpose input/output 59[3]
MFSRA	1				I/O	McBSP-A receive frame synch
EM1D25	2				I/O	External memory interface 1 data line 25
EM2D9	3				I/O	External memory interface 2 data line 9
OUTPUTXBAR2	5				O	Output 2 of the output XBAR
$\overline{\text{SPISTEB}}$	6				I/O	SPI-B slave transmit enable
SD2_C2	7				I	Sigma-Delta 2 channel 2 clock input
SPISOMIA	15				I/O	SPI-A slave out, master in[2]

Table 4-1. Signal Descriptions (continued)

TERMINAL					I/O/Z[1]	DESCRIPTION
NAME	MUX POSITION	ZWT BALL NO.	PTP PIN NO.	PZP PIN NO.		
GPIO60	0, 4, 8, 12	M17	105	54	I/O	General-purpose input/output 60
MCLKRB	1				I/O	McBSP-B receive clock
EM1D24	2				I/O	External memory interface 1 data line 24
EM2D8	3				I/O	External memory interface 2 data line 8
OUTPUTXBAR3	5				O	Output 3 of the output XBAR
SPISIMOB	6				I/O	SPI-B slave in, master out
SD2_D3	7				I	Sigma-Delta 2 channel 3 data input
SPICLKA	15				I/O	SPI-A clock[2]
GPIO61	0, 4, 8, 12	L16	107	56	I/O	General-purpose input/output 61[3]
MFSRB	1				I/O	McBSP-B receive frame synch
EM1D23	2				I/O	External memory interface 1 data line 23
EM2D7	3				I/O	External memory interface 2 data line 7
OUTPUTXBAR4	5				O	Output 4 of the output XBAR
SPISOMIB	6				I/O	SPI-B slave out, master in
SD2_C3	7				I	Sigma-Delta 2 channel 3 clock input
$\overline{\text{SPISTEA}}$	15				I/O	SPI-A slave transmit enable[2]
GPIO62	0, 4, 8, 12	J17	108	57	I/O	General-purpose input/output 62
SCIRXDC	1				I	SCI-C receive data
EM1D22	2				I/O	External memory interface 1 data line 22
EM2D6	3				I/O	External memory interface 2 data line 6
EQEP3A	5				I	Enhanced QEP3 input A
CANRXA	6				I	CAN-A receive
SD2_D4	7				I	Sigma-Delta 2 channel 4 data input
GPIO63	0, 4, 8, 12	J16	109	58	I/O	General-purpose input/output 63
SCITXDC	1				O	SCI-C transmit data
EM1D21	2				I/O	External memory interface 1 data line 21
EM2D5	3				I/O	External memory interface 2 data line 5
EQEP3B	5				I	Enhanced QEP3 input B
CANTXA	6				O	CAN-A transmit
SD2_C4	7				I	Sigma-Delta 2 channel 4 clock input
SPISIMOB	15				I/O	SPI-B slave in, master out[2]
GPIO64	0, 4, 8, 12	L17	110	59	I/O	General-purpose input/output 64[3]
EM1D20	2				I/O	External memory interface 1 data line 20
EM2D4	3				I/O	External memory interface 2 data line 4
EQEP3S	5				I/O	Enhanced QEP3 strobe
SCIRXDA	6				I	SCI-A receive data
SPISOMIB	15				I/O	SPI-B slave out, master in[2]
GPIO65	0, 4, 8, 12	K16	111	60	I/O	General-purpose input/output 65
EM1D19	2				I/O	External memory interface 1 data line 19
EM2D3	3				I/O	External memory interface 2 data line 3
EQEP3I	5				I/O	Enhanced QEP3 index
SCITXDA	6				O	SCI-A transmit data
SPICLKB	15				I/O	SPI-B clock[2]

Copyright © 2014–2020, Texas Instruments Incorporated

Table 4-1. Signal Descriptions (continued)

TERMINAL					I/O/Z[1]	DESCRIPTION
NAME	MUX POSITION	ZWT BALL NO.	PTP PIN NO.	PZP PIN NO.		
GPIO66	0, 4, 8, 12	K17	112	61	I/O	General-purpose input/output 66[3]
EM1D18	2				I/O	External memory interface 1 data line 18
EM2D2	3				I/O	External memory interface 2 data line 2
SDAB	6				I/OD	I2C-B data open-drain bidirectional port
$\overline{\text{SPISTEB}}$	15				I/O	SPI-B slave transmit enable[2]
GPIO67	0, 4, 8, 12	B19	132	–	I/O	General-purpose input/output 67
EM1D17	2				I/O	External memory interface 1 data line 17
EM2D1	3				I/O	External memory interface 2 data line 1
GPIO68	0, 4, 8, 12	C18	133	–	I/O	General-purpose input/output 68
EM1D16	2				I/O	External memory interface 1 data line 16
EM2D0	3				I/O	External memory interface 2 data line 0
GPIO69	0, 4, 8, 12	B18	134	75	I/O	General-purpose input/output 69
EM1D15	2				I/O	External memory interface 1 data line 15
SCLB	6				I/OD	I2C-B clock open-drain bidirectional port
SPISIMOC	15				I/O	SPI-C slave in, master out[2]
GPIO70	0, 4, 8, 12	A17	135	76	I/O	General-purpose input/output 70[3]
EM1D14	2				I/O	External memory interface 1 data line 14
CANRXA	5				I	CAN-A receive
SCITXDB	6				O	SCI-B transmit data
SPISOMIC	15				I/O	SPI-C slave out, master in[2]
GPIO71	0, 4, 8, 12	B17	136	77	I/O	General-purpose input/output 71
EM1D13	2				I/O	External memory interface 1 data line 13
CANTXA	5				O	CAN-A transmit
SCIRXDB	6				I	SCI-B receive data
SPICLKC	15				I/O	SPI-C clock[2]
GPIO72	0, 4, 8, 12	B16	139	80	I/O	General-purpose input/output 72.[3] This is the factory default boot mode select pin 1.
EM1D12	2				I/O	External memory interface 1 data line 12
CANTXB	5				O	CAN-B transmit
SCITXDC	6				O	SCI-C transmit data
$\overline{\text{SPISTEC}}$	15				I/O	SPI-C slave transmit enable[2]
GPIO73	0, 4, 8, 12	A16	140	81	I/O	General-purpose input/output 73
EM1D11	2				I/O	External memory interface 1 data line 11
XCLKOUT	3				O/Z	External clock output. This pin outputs a divided-down version of a chosen clock signal from within the device. The clock signal is chosen using the CLKSRCCTL3.XCLKOUTSEL bit field while the divide ratio is chosen using the XCLKOUTDIVSEL.XCLKOUTDIV bit field.
CANRXB	5				I	CAN-B receive
SCIRXDC	6				I	SCI-C receive
GPIO74	0, 4, 8, 12	C17	141	–	I/O	General-purpose input/output 74
EM1D10	2				I/O	External memory interface 1 data line 10
GPIO75	0, 4, 8, 12	D16	142	–	I/O	General-purpose input/output 75
EM1D9	2				I/O	External memory interface 1 data line 9

Table 4-1. Signal Descriptions (continued)

TERMINAL					I/O/Z[1]	DESCRIPTION
NAME	MUX POSITION	ZWT BALL NO.	PTP PIN NO.	PZP PIN NO.		
GPIO76	0, 4, 8, 12	C16	143	–	I/O	General-purpose input/output 76
EM1D8	2				I/O	External memory interface 1 data line 8
SCITXDD	6				O	SCI-D transmit data
GPIO77	0, 4, 8, 12	A15	144	–	I/O	General-purpose input/output 77
EM1D7	2				I/O	External memory interface 1 data line 7
SCIRXDD	6				I	SCI-D receive data
GPIO78	0, 4, 8, 12	B15	145	82	I/O	General-purpose input/output 78
EM1D6	2				I/O	External memory interface 1 data line 6
EQEP2A	6				I	Enhanced QEP2 input A
GPIO79	0, 4, 8, 12	C15	146	–	I/O	General-purpose input/output 79
EM1D5	2				I/O	External memory interface 1 data line 5
EQEP2B	6				I	Enhanced QEP2 input B
GPIO80	0, 4, 8, 12	D15	148	–	I/O	General-purpose input/output 80
EM1D4	2				I/O	External memory interface 1 data line 4
EQEP2S	6				I/O	Enhanced QEP2 strobe
GPIO81	0, 4, 8, 12	A14	149	–	I/O	General-purpose input/output 81
EM1D3	2				I/O	External memory interface 1 data line 3
EQEP2I	6				I/O	Enhanced QEP2 index
GPIO82	0, 4, 8, 12	B14	150	–	I/O	General-purpose input/output 82
EM1D2	2				I/O	External memory interface 1 data line 2
GPIO83	0, 4, 8, 12	C14	151	–	I/O	General-purpose input/output 83
EM1D1	2				I/O	External memory interface 1 data line 1
GPIO84	0, 4, 8, 12	A11	154	85	I/O	General-purpose input/output 84. This is the factory default boot mode select pin 0.
SCITXDA	5				O	SCI-A transmit data
MDXB	6				O	McBSP-B transmit serial data
MDXA	15				O	McBSP-A transmit serial data
GPIO85	0, 4, 8, 12	B11	155	86	I/O	General-purpose input/output 85
EM1D0	2				I/O	External memory interface 1 data line 0
SCIRXDA	5				I	SCI-A receive data
MDRB	6				I	McBSP-B receive serial data
MDRA	15				I	McBSP-A receive serial data
GPIO86	0, 4, 8, 12	C11	156	87	I/O	General-purpose input/output 86
EM1A13	2				O	External memory interface 1 address line 13
EM1CAS	3				O	External memory interface 1 column address strobe
SCITXDB	5				O	SCI-B transmit data
MCLKXB	6				I/O	McBSP-B transmit clock
MCLKXA	15				I/O	McBSP-A transmit clock
GPIO87	0, 4, 8, 12	D11	157	88	I/O	General-purpose input/output 87
EM1A14	2				O	External memory interface 1 address line 14
EM1RAS	3				O	External memory interface 1 row address strobe
SCIRXDB	5				I	SCI-B receive data
MFSXB	6				I/O	McBSP-B transmit frame synch
MFSXA	15				I/O	McBSP-A transmit frame synch

Copyright © 2014–2020, Texas Instruments Incorporated

Table 4-1. Signal Descriptions (continued)

TERMINAL					I/O/Z[1]	DESCRIPTION
NAME	MUX POSITION	ZWT BALL NO.	PTP PIN NO.	PZP PIN NO.		
GPIO88	0, 4, 8, 12	C6	170	–	I/O	General-purpose input/output 88
EM1A15	2				O	External memory interface 1 address line 15
EM1DQM0	3				O	External memory interface 1 Input/output mask for byte 0
GPIO89	0, 4, 8, 12	D6	171	96	I/O	General-purpose input/output 89
EM1A16	2				O	External memory interface 1 address line 16
EM1DQM1	3				O	External memory interface 1 Input/output mask for byte 1
SCITXDC	6				O	SCI-C transmit data
GPIO90	0, 4, 8, 12	A5	172	97	I/O	General-purpose input/output 90
EM1A17	2				O	External memory interface 1 address line 17
EM1DQM2	3				O	External memory interface 1 Input/output mask for byte 2
SCIRXDC	6				I	SCI-C receive data
GPIO91	0, 4, 8, 12	B5	173	98	I/O	General-purpose input/output 91
EM1A18	2				O	External memory interface 1 address line 18
EM1DQM3	3				O	External memory interface 1 Input/output mask for byte 3
SDAA	6				I/OD	I2C-A data open-drain bidirectional port
GPIO92	0, 4, 8, 12	A4	174	99	I/O	General-purpose input/output 92
EM1A19	2				O	External memory interface 1 address line 19
EM1BA1	3				O	External memory interface 1 bank address 1
SCLA	6				I/OD	I2C-A clock open-drain bidirectional port
GPIO93	0, 4, 8, 12	B4	175	–	I/O	General-purpose input/output 93
EM1BA0	3				O	External memory interface 1 bank address 0
SCITXDD	6				O	SCI-D transmit data
GPIO94	0, 4, 8, 12	A3	176	–	I/O	General-purpose input/output 94
SCIRXDD	6				I	SCI-D receive data
GPIO95	0, 4, 8, 12	B3	–	–	I/O	General-purpose input/output 95
GPIO96	0, 4, 8, 12	C3	–	–	I/O	General-purpose input/output 96
EM2DQM1	3				O	External memory interface 2 Input/output mask for byte 1
EQEP1A	5				I	Enhanced QEP1 input A
GPIO97	0, 4, 8, 12	A2	–	–	I/O	General-purpose input/output 97
EM2DQM0	3				O	External memory interface 2 Input/output mask for byte 0
EQEP1B	5				I	Enhanced QEP1 input B
GPIO98	0, 4, 8, 12	F1	–	–	I/O	General-purpose input/output 98
EM2A0	3				O	External memory interface 2 address line 0
EQEP1S	5				I/O	Enhanced QEP1 strobe
GPIO99	0, 4, 8, 12	G1	17	14	I/O	General-purpose input/output 99
EM2A1	3				O	External memory interface 2 address line 1
EQEP1I	5				I/O	Enhanced QEP1 index
GPIO100	0, 4, 8, 12	H1	–	–	I/O	General-purpose input/output 100
EM2A2	3				O	External memory interface 2 address line 2
EQEP2A	5				I	Enhanced QEP2 input A
SPISIMOC	6				I/O	SPI-C slave in, master out
GPIO101	0, 4, 8, 12	H2	–	–	I/O	General-purpose input/output 101
EM2A3	3				O	External memory interface 2 address line 3
EQEP2B	5				I	Enhanced QEP2 input B
SPISOMIC	6				I/O	SPI-C slave out, master in

Copyright © 2014–2020, Texas Instruments Incorporated

Table 4-1. Signal Descriptions (continued)

TERMINAL					I/O/Z[1]	DESCRIPTION
NAME	MUX POSITION	ZWT BALL NO.	PTP PIN NO.	PZP PIN NO.		
GPIO102	0, 4, 8, 12	H3	–	–	I/O	General-purpose input/output 102
EM2A4	3				O	External memory interface 2 address line 4
EQEP2S	5				I/O	Enhanced QEP2 strobe
SPICLKC	6				I/O	SPI-C clock
GPIO103	0, 4, 8, 12	J1	–	–	I/O	General-purpose input/output 103
EM2A5	3				O	External memory interface 2 address line 5
EQEP2I	5				I/O	Enhanced QEP2 index
$\overline{\text{SPISTEC}}$	6				I/O	SPI-C slave transmit enable
GPIO104	0, 4, 8, 12	J2	–	–	I/O	General-purpose input/output 104
SDAA	1				I/OD	I2C-A data open-drain bidirectional port
EM2A6	3				O	External memory interface 2 address line 6
EQEP3A	5				I	Enhanced QEP3 input A
SCITXDD	6				O	SCI-D transmit data
GPIO105	0, 4, 8, 12	J3	–	–	I/O	General-purpose input/output 105
SCLA	1				I/OD	I2C-A clock open-drain bidirectional port
EM2A7	3				O	External memory interface 2 address line 7
EQEP3B	5				I	Enhanced QEP3 input B
SCIRXDD	6				I	SCI-D receive data
GPIO106	0, 4, 8, 12	L2	–	–	I/O	General-purpose input/output 106
EM2A8	3				O	External memory interface 2 address line 8
EQEP3S	5				I/O	Enhanced QEP3 strobe
SCITXDC	6				O	SCI-C transmit data
GPIO107	0, 4, 8, 12	L3	–	–	I/O	General-purpose input/output 107
EM2A9	3				O	External memory interface 2 address line 9
EQEP3I	5				I/O	Enhanced QEP3 index
SCIRXDC	6				I	SCI-C receive data
GPIO108	0, 4, 8, 12	L4	–	–	I/O	General-purpose input/output 108
EM2A10	3				O	External memory interface 2 address line 10
GPIO109	0, 4, 8, 12	N2	–	–	I/O	General-purpose input/output 109
EM2A11	3				O	External memory interface 2 address line 11
GPIO110	0, 4, 8, 12	M2	–	–	I/O	General-purpose input/output 110
EM2WAIT	3				I	External memory interface 2 Asynchronous SRAM WAIT
GPIO111	0, 4, 8, 12	M4	–	–	I/O	General-purpose input/output 111
EM2BA0	3				O	External memory interface 2 bank address 0
GPIO112	0, 4, 8, 12	M3	–	–	I/O	General-purpose input/output 112
EM2BA1	3				O	External memory interface 2 bank address 1
GPIO113	0, 4, 8, 12	N4	–	–	I/O	General-purpose input/output 113
EM2CAS	3				O	External memory interface 2 column address strobe
GPIO114	0, 4, 8, 12	N3	–	–	I/O	General-purpose input/output 114
EM2RAS	3				O	External memory interface 2 row address strobe
GPIO115	0, 4, 8, 12	V12	–	–	I/O	General-purpose input/output 115
$\overline{\text{EM2CS0}}$	3				O	External memory interface 2 chip select 0
GPIO116	0, 4, 8, 12	W10	–	–	I/O	General-purpose input/output 116
$\overline{\text{EM2CS2}}$	3				O	External memory interface 2 chip select 2

Copyright © 2014–2020, Texas Instruments Incorporated

Table 4-1. Signal Descriptions (continued)

TERMINAL					I/O/Z[1]	DESCRIPTION
NAME	MUX POSITION	ZWT BALL NO.	PTP PIN NO.	PZP PIN NO.		
GPIO117	0, 4, 8, 12	U12	–	–	I/O	General-purpose input/output 117
EM2SDCKE	3				O	External memory interface 2 SDRAM clock enable
GPIO118	0, 4, 8, 12	T12	–	–	I/O	General-purpose input/output 118
EM2CLK	3				O	External memory interface 2 clock
GPIO119	0, 4, 8, 12	T15	–	–	I/O	General-purpose input/output 119
EM2RNW	3				O	External memory interface 2 read not write
GPIO120	0, 4, 8, 12	U15	–	–	I/O	General-purpose input/output 120
$\overline{\text{EM2WE}}$	3				O	External memory interface 2 write enable
USB0PFLT	15				I/O	USB external regulator power fault indicator
GPIO121	0, 4, 8, 12	W16	–	–	I/O	General-purpose input/output 121
$\overline{\text{EM2OE}}$	3				O	External memory interface 2 output enable
USB0EPEN	15				I/O	USB external regulator enable
GPIO122	0, 4, 8, 12	T8	–	–	I/O	General-purpose input/output 122
SPISIMOC	6				I/O	SPI-C slave in, master out
SD1_D1	7				I	Sigma-Delta 1 channel 1 data input
GPIO123	0, 4, 8, 12	U8	–	–	I/O	General-purpose input/output 123
SPISOMIC	6				I/O	SPI-C slave out, master in
SD1_C1	7				I	Sigma-Delta 1 channel 1 clock input
GPIO124	0, 4, 8, 12	V8	–	–	I/O	General-purpose input/output 124
SPICLKC	6				I/O	SPI-C clock
SD1_D2	7				I	Sigma-Delta 1 channel 2 data input
GPIO125	0, 4, 8, 12	T9	–	–	I/O	General-purpose input/output 125
$\overline{\text{SPISTEC}}$	6				I/O	SPI-C slave transmit enable
SD1_C2	7				I	Sigma-Delta 1 channel 2 clock input
GPIO126	0, 4, 8, 12	U9	–	–	I/O	General-purpose input/output 126
SD1_D3	7				I	Sigma-Delta 1 channel 3 data input
GPIO127	0, 4, 8, 12	V9	–	–	I/O	General-purpose input/output 127
SD1_C3	7				I	Sigma-Delta 1 channel 3 clock input
GPIO128	0, 4, 8, 12	W9	–	–	I/O	General-purpose input/output 128
SD1_D4	7				I	Sigma-Delta 1 channel 4 data input
GPIO129	0, 4, 8, 12	T10	–	–	I/O	General-purpose input/output 129
SD1_C4	7				I	Sigma-Delta 1 channel 4 clock input
GPIO130	0, 4, 8, 12	U10	–	–	I/O	General-purpose input/output 130
SD2_D1	7				I	Sigma-Delta 2 channel 1 data input
GPIO131	0, 4, 8, 12	V10	–	–	I/O	General-purpose input/output 131
SD2_C1	7				I	Sigma-Delta 2 channel 1 clock input
GPIO132	0, 4, 8, 12	W18	–	–	I/O	General-purpose input/output 132
SD2_D2	7				I	Sigma-Delta 2 channel 2 data input
GPIO133/AUXCLKIN	0, 4, 8, 12	G18	118	–	I/O	General-purpose input/output 133. The AUXCLKIN function of this GPIO pin could be used to provide a single-ended 3.3-V level clock signal to the Auxiliary Phase-Locked Loop (AUXPLL), whose output is used for the USB module. The AUXCLKIN clock may also be used for the CAN module.
SD2_C2	7				I	Sigma-Delta 2 channel 2 clock input

Table 4-1. Signal Descriptions (continued)

TERMINAL					I/O/Z[1]	DESCRIPTION
NAME	MUX POSITION	ZWT BALL NO.	PTP PIN NO.	PZP PIN NO.		
GPIO134	0, 4, 8, 12	V18	–	–	I/O	General-purpose input/output 134
SD2_D3	7				I	Sigma-Delta 2 channel 3 data input
GPIO135	0, 4, 8, 12	U18	–	–	I/O	General-purpose input/output 135
SCITXDA	6				O	SCI-A transmit data
SD2_C3	7				I	Sigma-Delta 2 channel 3 clock input
GPIO136	0, 4, 8, 12	T17	–	–	I/O	General-purpose input/output 136
SCIRXDA	6				I	SCI-A receive data
SD2_D4	7				I	Sigma-Delta 2 channel 4 data input
GPIO137	0, 4, 8, 12	T18	–	–	I/O	General-purpose input/output 137
SCITXDB	6				O	SCI-B transmit data
SD2_C4	7				I	Sigma-Delta 2 channel 4 clock input
GPIO138	0, 4, 8, 12	T19	–	–	I/O	General-purpose input/output 138
SCIRXDB	6				I	SCI-B receive data
GPIO139	0, 4, 8, 12	N19	–	–	I/O	General-purpose input/output 139
SCIRXDC	6				I	SCI-C receive data
GPIO140	0, 4, 8, 12	M19	–	–	I/O	General-purpose input/output 140
SCITXDC	6				O	SCI-C transmit data
GPIO141	0, 4, 8, 12	M18	–	–	I/O	General-purpose input/output 141
SCIRXDD	6				I	SCI-D receive data
GPIO142	0, 4, 8, 12	L19	–	–	I/O	General-purpose input/output 142
SCITXDD	6				O	SCI-D transmit data
GPIO143	0, 4, 8, 12	F18	–	–	I/O	General-purpose input/output 143
GPIO144	0, 4, 8, 12	F17	–	–	I/O	General-purpose input/output 144
GPIO145	0, 4, 8, 12	E17	–	–	I/O	General-purpose input/output 145
EPWM1A	1				O	Enhanced PWM1 output A (HRPWM-capable)
GPIO146	0, 4, 8, 12	D18	–	–	I/O	General-purpose input/output 146
EPWM1B	1				O	Enhanced PWM1 output B (HRPWM-capable)
GPIO147	0, 4, 8, 12	D17	–	–	I/O	General-purpose input/output 147
EPWM2A	1				O	Enhanced PWM2 output A (HRPWM-capable)
GPIO148	0, 4, 8, 12	D14	–	–	I/O	General-purpose input/output 148
EPWM2B	1				O	Enhanced PWM2 output B (HRPWM-capable)
GPIO149	0, 4, 8, 12	A13	–	–	I/O	General-purpose input/output 149
EPWM3A	1				O	Enhanced PWM3 output A (HRPWM-capable)
GPIO150	0, 4, 8, 12	B13	–	–	I/O	General-purpose input/output 150
EPWM3B	1				O	Enhanced PWM3 output B (HRPWM-capable)
GPIO151	0, 4, 8, 12	C13	–	–	I/O	General-purpose input/output 151
EPWM4A	1				O	Enhanced PWM4 output A (HRPWM-capable)
GPIO152	0, 4, 8, 12	D13	–	–	I/O	General-purpose input/output 152
EPWM4B	1				O	Enhanced PWM4 output B (HRPWM-capable)
GPIO153	0, 4, 8, 12	A12	–	–	I/O	General-purpose input/output 153
EPWM5A	1				O	Enhanced PWM5 output A (HRPWM-capable)
GPIO154	0, 4, 8, 12	B12	–	–	I/O	General-purpose input/output 154
EPWM5B	1				O	Enhanced PWM5 output B (HRPWM-capable)
GPIO155	0, 4, 8, 12	C12	–	–	I/O	General-purpose input/output 155
EPWM6A	1				O	Enhanced PWM6 output A (HRPWM-capable)

Copyright © 2014–2020, Texas Instruments Incorporated

Table 4-1. Signal Descriptions (continued)

TERMINAL					I/O/Z[1]	DESCRIPTION
NAME	MUX POSITION	ZWT BALL NO.	PTP PIN NO.	PZP PIN NO.		
GPIO156 EPWM6B	0, 4, 8, 12 1	D12	–	–	I/O O	General-purpose input/output 156 Enhanced PWM6 output B (HRPWM-capable)
GPIO157 EPWM7A	0, 4, 8, 12 1	B10	–	–	I/O O	General-purpose input/output 157 Enhanced PWM7 output A (HRPWM-capable)
GPIO158 EPWM7B	0, 4, 8, 12 1	C10	–	–	I/O O	General-purpose input/output 158 Enhanced PWM7 output B (HRPWM-capable)
GPIO159 EPWM8A	0, 4, 8, 12 1	D10	–	–	I/O O	General-purpose input/output 159 Enhanced PWM8 output A (HRPWM-capable)
GPIO160 EPWM8B	0, 4, 8, 12 1	B9	–	–	I/O O	General-purpose input/output 160 Enhanced PWM8 output B (HRPWM-capable)
GPIO161 EPWM9A	0, 4, 8, 12 1	C9	–	–	I/O O	General-purpose input/output 161 Enhanced PWM9 output A
GPIO162 EPWM9B	0, 4, 8, 12 1	D9	–	–	I/O O	General-purpose input/output 162 Enhanced PWM9 output B
GPIO163 EPWM10A	0, 4, 8, 12 1	A8	–	–	I/O O	General-purpose input/output 163 Enhanced PWM10 output A
GPIO164 EPWM10B	0, 4, 8, 12 1	B8	–	–	I/O O	General-purpose input/output 164 Enhanced PWM10 output B
GPIO165 EPWM11A	0, 4, 8, 12 1	C5	–	–	I/O O	General-purpose input/output 165 Enhanced PWM11 output A
GPIO166 EPWM11B	0, 4, 8, 12 1	D5	–	–	I/O O	General-purpose input/output 166 Enhanced PWM11 output B
GPIO167 EPWM12A	0, 4, 8, 12 1	C4	–	–	I/O O	General-purpose input/output 167 Enhanced PWM12 output A
GPIO168 EPWM12B	0, 4, 8, 12 1	D4	–	–	I/O O	General-purpose input/output 168 Enhanced PWM12 output B
RESET						
$\overline{\text{XRS}}$		F19	124	69	I/OD	Device Reset (in) and Watchdog Reset (out). The devices have a built-in power-on reset (POR) circuit. During a power-on condition, this pin is driven low by the device. An external circuit may also drive this pin to assert a device reset. This pin is also driven low by the MCU when a watchdog reset or NMI watchdog reset occurs. During watchdog reset, the $\overline{\text{XRS}}$ pin is driven low for the watchdog reset duration of 512 OSCCLK cycles. A resistor with a value from 2.2 kΩ to 10 kΩ should be placed between $\overline{\text{XRS}}$ and V_{DDIO}. If a capacitor is placed between $\overline{\text{XRS}}$ and V_{SS} for noise filtering, it should be 100 nF or smaller. These values will allow the watchdog to properly drive the $\overline{\text{XRS}}$ pin to V_{OL} within 512 OSCCLK cycles when the watchdog reset is asserted. The output buffer of this pin is an open drain with an internal pullup. If this pin is driven by an external device, it should be done using an open-drain device.

Table 4-1. Signal Descriptions (continued)

TERMINAL					I/O/Z[1]	DESCRIPTION
NAME	MUX POSITION	ZWT BALL NO.	PTP PIN NO.	PZP PIN NO.		
CLOCKS						
X1		G19	123	68	I	On-chip crystal-oscillator input. To use this oscillator, a quartz crystal must be connected across X1 and X2. If this pin is not used, it must be tied to GND. This pin can also be used to feed a single-ended 3.3-V level clock. In this case, X2 is a No Connect (NC).
X2		J19	121	66	O	On-chip crystal-oscillator output. A quartz crystal may be connected across X1 and X2. If X2 is not used, it must be left unconnected.
NO CONNECT						
NC		H4	–	–		No connect. BGA ball is electrically open and not connected to the die.
JTAG						
TCK		V15	81	50	I	JTAG test clock with internal pullup (see Section 5.6)
TDI		W13	77	46	I	JTAG test data input (TDI) with internal pullup. TDI is clocked into the selected register (instruction or data) on a rising edge of TCK.
TDO		W15	78	47	O/Z	JTAG scan out, test data output (TDO). The contents of the selected register (instruction or data) are shifted out of TDO on the falling edge of TCK.[3]
TMS		W14	80	49	I	JTAG test-mode select (TMS) with internal pullup. This serial control input is clocked into the TAP controller on the rising edge of TCK.
$\overline{\text{TRST}}$		V14	79	48	I	JTAG test reset with internal pulldown. $\overline{\text{TRST}}$, when driven high, gives the scan system control of the operations of the device. If this signal is driven low, the device operates in its functional mode, and the test reset signals are ignored. NOTE: $\overline{\text{TRST}}$ must be maintained low at all times during normal device operation. An external pulldown resistor is required on this pin. The value of this resistor should be based on drive strength of the debugger pods applicable to the design. A 2.2-kΩ or smaller resistor generally offers adequate protection. The value of the resistor is application-specific. TI recommends that each target board be validated for proper operation of the debugger and the application. This pin has an internal 50-ns (nominal) glitch filter.
INTERNAL VOLTAGE REGULATOR CONTROL						
VREGENZ		J18	119	64	I	Internal voltage regulator enable with internal pulldown. The internal VREG is not supported and must be disabled. Connect VREGENZ to V_{DDIO}.

Copyright © 2014–2020, Texas Instruments Incorporated

Table 4-1. Signal Descriptions (continued)

TERMINAL					I/O/Z[1]	DESCRIPTION
NAME	MUX POSITION	ZWT BALL NO.	PTP PIN NO.	PZP PIN NO.		
ANALOG, DIGITAL, AND I/O POWER						
V_{DD}		E9	16	16		1.2-V digital logic power pins. TI recommends placing a decoupling capacitor near each V_{DD} pin with a minimum total capacitance of approximately 20 uF. The exact value of the decoupling capacitance should be determined by your system voltage regulation solution.
		E11	21	39		
		F9	61	45		
		F11	76	63		
		G14	117	71		
		G15	126	78		
		J14	137	84		
		J15	153	89		
		K5	158	95		
		K6	169	–		
		P10	–	–		
		P13	–	–		
		R10	–	–		
		R13	–	–		
V_{DD3VFL}		R11	72	41		3.3-V Flash power pin. Place a minimum 0.1-µF decoupling capacitor on each pin.
		R12	–	–		
V_{DDA}		P6	36	18		3.3-V analog power pins. Place a minimum 2.2-µF decoupling capacitor to V_{SSA} on each pin.
		R6	54	38		

Table 4-1. Signal Descriptions (continued)

TERMINAL					I/O/Z[1]	DESCRIPTION
NAME	MUX POSITION	ZWT BALL NO.	PTP PIN NO.	PZP PIN NO.		
V_{DDIO}		A9	3	2		3.3-V digital I/O power pins. Place a minimum 0.1-µF decoupling capacitor on each pin. The exact value of the decoupling capacitance should be determined by your system voltage regulation solution.
		A18	11	10		
		B1	15	15		
		E7	20	40		
		E10	26	44		
		E13	62	55		
		E16	68	62		
		F4	75	72		
		F7	82	79		
		F10	88	83		
		F13	91	90		
		F16	99	94		
		G4	106	–		
		G5	114	–		
		G6	116	–		
		H5	127	–		
		H6	138	–		
		L14	147	–		
		L15	152	–		
		M1	159	–		
		M5	168	–		
		M6	–	–		
		N14	–	–		
		N15	–	–		
		P9	–	–		
		R9	–	–		
		V19	–	–		
		W8	–	–		
V_{DDOSC}		H16	120	65		Power pins for the 3.3-V on-chip crystal oscillator (X1 and X2) and the two zero-pin internal oscillators (INTOSC). Place a 0.1-µF (minimum) decoupling capacitor on each pin.
		H17	125	70		

Copyright © 2014–2020, Texas Instruments Incorporated

Table 4-1. Signal Descriptions (continued)

TERMINAL					I/O/Z[1]	DESCRIPTION
NAME	MUX POSITION	ZWT BALL NO.	PTP PIN NO.	PZP PIN NO.		
V_{SS}		A1	PWR PAD	PWR PAD		Device ground. For Quad Flatpacks (QFPs), the PowerPAD on the bottom of the package must be soldered to the ground plane of the PCB.
		A10				
		A19				
		E5				
		E6				
		E8				
		E12				
		E14				
		E15				
		F5				
		F6				
		F8				
		F12				
		F14				
		F15				
		G16				
		G17				
		H8				
		H9				
		H10				
		H11				
		H12				
		H14				
		H15				
		J5				
		J6				
		J8				
		J9				
		J10				
		J11				
		J12				
		K8				
		K9				
		K10				
		K11				
		K12				
		K14				
		K15				
		L5				
		L6				
		L8				
		L9				

Table 4-1. Signal Descriptions (continued)

TERMINAL					I/O/Z[1]	DESCRIPTION
NAME	MUX POSITION	ZWT BALL NO.	PTP PIN NO.	PZP PIN NO.		
V_{SS}		L10	PWR PAD	PWR PAD		Device ground. For Quad Flatpacks (QFPs), the PowerPAD on the bottom of the package must be soldered to the ground plane of the PCB.
		L11				
		L12				
		L18				
		M8				
		M9				
		M10				
		M11				
		M12				
		M14				
		M15				
		N1				
		N5				
		N6				
		P7				
		P8				
		P11				
		P12				
		P14				
		P15				
		R7				
		R8				
		R14				
		R15				
		W7				
		W19				
V_{SSOSC}		H18	122	67		Crystal oscillator (X1 and X2) ground pin. When using an external crystal, do not connect this pin to the board ground. Instead, connect it to the ground reference of the external crystal oscillator circuit. If an external crystal is not used, this pin may be connected to the board ground.
		H19	–	–		
V_{SSA}		P1	34	17		Analog ground. On the PZP package, pin 17 is double-bonded to V_{SSA} and V_{REFLOA}. This pin must be connect to V_{SSA}.
		P5	52	35		
		R5	–	36		
		V7	–	–		
		W1	–	–		

Copyright © 2014–2020, Texas Instruments Incorporated

Table 4-1. Signal Descriptions (continued)

TERMINAL					I/O/Z[1]	DESCRIPTION
NAME	MUX POSITION	ZWT BALL NO.	PTP PIN NO.	PZP PIN NO.		
SPECIAL FUNCTIONS						
ERRORSTS		U19	92	–	O	Error status output. This pin has an internal pulldown.
TEST PINS						
FLT1		W12	73	42	I/O	Flash test pin 1. Reserved for TI. Must be left unconnected.
FLT2		V13	74	43	I/O	Flash test pin 2. Reserved for TI. Must be left unconnected.

(1) I = Input, O = Output, OD = Open Drain, Z = High Impedance

(2) High-Speed SPI-enabled GPIO mux option. This pin mux option is required when using the SPI in High-Speed Mode (HS_MODE = 1 in SPICCR). This mux option is still available when not using the SPI in High-Speed Mode (HS_MODE = 0 in SPICCR).

(3) This pin has output impedance that can be as low as 22 Ω. This output could have fast edges and ringing depending on the system PCB characteristics. If this is a concern, the user should take precautions such as adding a 39Ω (10% tolerance) series termination resistor or implement some other termination scheme. It is also recommended that a system-level signal integrity analysis be performed with the provided IBIS models. The termination is not required if this pin is used for input function.

4.3 Pins With Internal Pullup and Pulldown

Some pins on the device have internal pullups or pulldowns. Table 4-2 lists the pull direction and when it is active. The pullups on GPIO pins are disabled by default and can be enabled through software. In order to avoid any floating unbonded inputs, the Boot ROM will enable internal pullups on GPIO pins that are not bonded out in a particular package. Other pins noted in Table 4-2 with pullups and pulldowns are always on and cannot be disabled.

Table 4-2. Pins With Internal Pullup and Pulldown

PIN	RESET ($\overline{XRS}$ = 0)	DEVICE BOOT	APPLICATION SOFTWARE
GPIOx	Pullup disabled	Pullup disabled[1]	Pullup enable is application-defined
$\overline{TRST}$	Pulldown active		
TCK	Pullup active		
TMS	Pullup active		
TDI	Pullup active		
$\overline{XRS}$	Pullup active		
VREGENZ	Pulldown active		
ERRORSTS	Pulldown active		
Other pins	No pullup or pulldown present		

(1) Pins not bonded out in a given package will have the internal pullups enabled by the Boot ROM.

4.4 Pin Multiplexing

4.4.1 GPIO Muxed Pins

Table 4-3 shows the GPIO muxed pins. The default for each pin is the GPIO function, secondary functions can be selected by setting both the GPyGMUXn.GPIOz and GPyMUXn.GPIOz register bits. The GPyGMUXn register should be configured prior to the GPyMUXn to avoid transient pulses on GPIO's from alternate mux selections. Columns not shown and blank cells are reserved GPIO Mux settings.

Table 4-3. GPIO Muxed Pins(1)(2)

	GPIO Mux Selection							
GPIO Index	**0, 4, 8, 12**	**1**	**2**	**3**	**5**	**6**	**7**	**15**
GPyGMUXn. GPIOz =	**00b, 01b, 10b, 11b**	**00b**			**01b**			**11b**
GPyMUXn. GPIOz =	**00b**	**01b**	**10b**	**11b**	**01b**	**10b**	**11b**	**11b**
	GPIO0	EPWM1A (O)				SDAA (I/OD)		
	GPIO1	EPWM1B (O)		MFSRB (I/O)		SCLA (I/OD)		
	GPIO2	EPWM2A (O)			OUTPUTXBAR1 (O)	SDAB (I/OD)		
	GPIO3	EPWM2B (O)	OUTPUTXBAR2 (O)	MCLKRB (I/O)	OUTPUTXBAR2 (O)	SCLB (I/OD)		
	GPIO4	EPWM3A (O)			OUTPUTXBAR3 (O)	CANTXA (O)		
	GPIO5	EPWM3B (O)	MFSRA (I/O)	OUTPUTXBAR3 (O)		CANRXA (I)		
	GPIO6	EPWM4A (O)	OUTPUTXBAR4 (O)	EXTSYNCOUT (O)	EQEP3A (I)	CANTXB (O)		
	GPIO7	EPWM4B (O)	MCLKRA (I/O)	OUTPUTXBAR5 (O)	EQEP3B (I)	CANRXB (I)		
	GPIO8	EPWM5A (O)	CANTXB (O)	ADCSOCAO (O)	EQEP3S (I/O)	SCITXDA (O)		
	GPIO9	EPWM5B (O)	SCITXDB (O)	OUTPUTXBAR6 (O)	EQEP3I (I/O)	SCIRXDA (I)		
	GPIO10	EPWM6A (O)	CANRXB (I)	ADCSOCBO (O)	EQEP1A (I)	SCITXDB (O)		UPP-WAIT (I/O)
	GPIO11	EPWM6B (O)	SCIRXDB (I)	OUTPUTXBAR7 (O)	EQEP1B (I)	SCIRXDB (I)		UPP-START (I/O)
	GPIO12	EPWM7A (O)	CANTXB (O)	MDXB (O)	EQEP1S (I/O)	SCITXDC (O)		UPP-ENA (I/O)
	GPIO13	EPWM7B (O)	CANRXB (I)	MDRB (I)	EQEP1I (I/O)	SCIRXDC (I)		UPP-D7 (I/O)
	GPIO14	EPWM8A (O)	SCITXDB (O)	MCLKXB (I/O)		OUTPUTXBAR3 (O)		UPP-D6 (I/O)
	GPIO15	EPWM8B (O)	SCIRXDB (I)	MFSXB (I/O)		OUTPUTXBAR4 (O)		UPP-D5 (I/O)
	GPIO16	SPISIMOA (I/O)	CANTXB (O)	OUTPUTXBAR7 (O)	EPWM9A (O)		SD1_D1 (I)	UPP-D4 (I/O)
	GPIO17	SPISOMIA (I/O)	CANRXB (I)	OUTPUTXBAR8 (O)	EPWM9B (O)		SD1_C1 (I)	UPP-D3 (I/O)
	GPIO18	SPICLKA (I/O)	SCITXDB (O)	CANRXA (I)	EPWM10A (O)		SD1_D2 (I)	UPP-D2 (I/O)
	GPIO19	$\overline{\text{SPISTEA}}$ (I/O)	SCIRXDB (I)	CANTXA (O)	EPWM10B (O)		SD1_C2 (I)	UPP-D1 (I/O)
	GPIO20	EQEP1A (I)	MDXA (O)	CANTXB (O)	EPWM11A (O)		SD1_D3 (I)	UPP-D0 (I/O)
	GPIO21	EQEP1B (I)	MDRA (I)	CANRXB (I)	EPWM11B (O)		SD1_C3 (I)	UPP-CLK (I/O)
	GPIO22	EQEP1S (I/O)	MCLKXA (I/O)	SCITXDB (O)	EPWM12A (O)	SPICLKB (I/O)	SD1_D4 (I)	
	GPIO23	EQEP1I (I/O)	MFSXA (I/O)	SCIRXDB (I)	EPWM12B (O)	$\overline{\text{SPISTEB}}$ (I/O)	SD1_C4 (I)	
	GPIO24	OUTPUTXBAR1 (O)	EQEP2A (I)	MDXB (O)		SPISIMOB (I/O)	SD2_D1 (I)	
	GPIO25	OUTPUTXBAR2 (O)	EQEP2B (I)	MDRB (I)		SPISOMIB (I/O)	SD2_C1 (I)	
	GPIO26	OUTPUTXBAR3 (O)	EQEP2I (I/O)	MCLKXB (I/O)	OUTPUTXBAR3 (O)	SPICLKB (I/O)	SD2_D2 (I)	
	GPIO27	OUTPUTXBAR4 (O)	EQEP2S (I/O)	MFSXB (I/O)	OUTPUTXBAR4 (O)	$\overline{\text{SPISTEB}}$ (I/O)	SD2_C2 (I)	
	GPIO28	SCIRXDA (I)	$\overline{\text{EM1CS4}}$ (O)		OUTPUTXBAR5 (O)	EQEP3A (I)	SD2_D3 (I)	
	GPIO29	SCITXDA (O)	EM1SDCKE (O)		OUTPUTXBAR6 (O)	EQEP3B (I)	SD2_C3 (I)	
	GPIO30	CANRXA (I)	EM1CLK (O)		OUTPUTXBAR7 (O)	EQEP3S (I/O)	SD2_D4 (I)	
	GPIO31	CANTXA (O)	$\overline{\text{EM1WE}}$ (O)		OUTPUTXBAR8 (O)	EQEP3I (I/O)	SD2_C4 (I)	
	GPIO32	SDAA (I/OD)	$\overline{\text{EM1CS0}}$ (O)					
	GPIO33	SCLA (I/OD)	EM1RNW (O)					
	GPIO34	OUTPUTXBAR1 (O)	$\overline{\text{EM1CS2}}$ (O)			SDAB (I/OD)		
	GPIO35	SCIRXDA (I)	$\overline{\text{EM1CS3}}$ (O)			SCLB (I/OD)		
	GPIO36	SCITXDA (O)	EM1WAIT (I)			CANRXA (I)		
	GPIO37	OUTPUTXBAR2 (O)	$\overline{\text{EM1OE}}$ (O)			CANTXA (O)		
	GPIO38		EM1A0 (O)		SCITXDC (O)	CANTXB (O)		
	GPIO39		EM1A1 (O)		SCIRXDC (I)	CANRXB (I)		

(1) I = Input, O = Output, OD = Open Drain
(2) GPIO Index settings of 9, 10, 11, 13, and 14 are reserved.

Copyright © 2014–2020, Texas Instruments Incorporated

Table 4-3. GPIO Muxed Pins[(1)(2)] (continued)

	GPIO Mux Selection							
GPIO Index	**0, 4, 8, 12**	**1**	**2**	**3**	**5**	**6**	**7**	**15**
GPyGMUXn. GPIOz =	**00b, 01b, 10b, 11b**	**00b**			**01b**			**11b**
GPyMUXn. GPIOz =	**00b**	**01b**	**10b**	**11b**	**01b**	**10b**	**11b**	**11b**
	GPIO40		EM1A2 (O)			SDAB (I/OD)		
	GPIO41		EM1A3 (O)			SCLB (I/OD)		
	GPIO42					SDAA (I/OD)		SCITXDA (O)
	GPIO43					SCLA (I/OD)		SCIRXDA (I)
	GPIO44		EM1A4 (O)					
	GPIO45		EM1A5 (O)					
	GPIO46		EM1A6 (O)			SCIRXDD (I)		
	GPIO47		EM1A7 (O)			SCITXDD (O)		
	GPIO48	OUTPUTXBAR3 (O)	EM1A8 (O)			SCITXDA (O)	SD1_D1 (I)	
	GPIO49	OUTPUTXBAR4 (O)	EM1A9 (O)			SCIRXDA (I)	SD1_C1 (I)	
	GPIO50	EQEP1A (I)	EM1A10 (O)			SPISIMOC (I/O)	SD1_D2 (I)	
	GPIO51	EQEP1B (I)	EM1A11 (O)			SPISOMIC (I/O)	SD1_C2 (I)	
	GPIO52	EQEP1S (I/O)	EM1A12 (O)			SPICLKC (I/O)	SD1_D3 (I)	
	GPIO53	EQEP1I (I/O)	EM1D31 (I/O)	EM2D15 (I/O)		$\overline{\text{SPISTEC}}$ (I/O)	SD1_C3 (I)	
	GPIO54	SPISIMOA (I/O)	EM1D30 (I/O)	EM2D14 (I/O)	EQEP2A (I)	SCITXDB (O)	SD1_D4 (I)	
	GPIO55	SPISOMIA (I/O)	EM1D29 (I/O)	EM2D13 (I/O)	EQEP2B (I)	SCIRXDB (I)	SD1_C4 (I)	
	GPIO56	SPICLKA (I/O)	EM1D28 (I/O)	EM2D12 (I/O)	EQEP2S (I/O)	SCITXDC (O)	SD2_D1 (I)	
	GPIO57	$\overline{\text{SPISTEA}}$ (I/O)	EM1D27 (I/O)	EM2D11 (I/O)	EQEP2I (I/O)	SCIRXDC (I)	SD2_C1 (I)	
	GPIO58	MCLKRA (I/O)	EM1D26 (I/O)	EM2D10 (I/O)	OUTPUTXBAR1 (O)	SPICLKB (I/O)	SD2_D2 (I)	SPISIMOA[(3)] (I/O)
	GPIO59	MFSRA (I/O)	EM1D25 (I/O)	EM2D9 (I/O)	OUTPUTXBAR2 (O)	$\overline{\text{SPISTEB}}$ (I/O)	SD2_C2 (I)	SPISOMIA[(3)] (I/O)
	GPIO60	MCLKRB (I/O)	EM1D24 (I/O)	EM2D8 (I/O)	OUTPUTXBAR3 (O)	SPISIMOB (I/O)	SD2_D3 (I)	SPICLKA[(3)] (I/O)
	GPIO61	MFSRB (I/O)	EM1D23 (I/O)	EM2D7 (I/O)	OUTPUTXBAR4 (O)	SPISOMIB (I/O)	SD2_C3 (I)	$\overline{\text{SPISTEA}}$[(3)] (I/O)
	GPIO62	SCIRXDC (I)	EM1D22 (I/O)	EM2D6 (I/O)	EQEP3A (I)	CANRXA (I)	SD2_D4 (I)	
	GPIO63	SCITXDC (O)	EM1D21 (I/O)	EM2D5 (I/O)	EQEP3B (I)	CANTXA (O)	SD2_C4 (I)	SPISIMOB[(3)] (I/O)
	GPIO64		EM1D20 (I/O)	EM2D4 (I/O)	EQEP3S (I/O)	SCIRXDA (I)		SPISOMIB[(3)] (I/O)
	GPIO65		EM1D19 (I/O)	EM2D3 (I/O)	EQEP3I (I/O)	SCITXDA (O)		SPICLKB[(3)] (I/O)
	GPIO66		EM1D18 (I/O)	EM2D2 (I/O)		SDAB (I/OD)		$\overline{\text{SPISTEB}}$[(3)] (I/O)
	GPIO67		EM1D17 (I/O)	EM2D1 (I/O)				
	GPIO68		EM1D16 (I/O)	EM2D0 (I/O)				
	GPIO69		EM1D15 (I/O)			SCLB (I/OD)		SPISIMOC[(3)] (I/O)
	GPIO70		EM1D14 (I/O)		CANRXA (I)	SCITXDB (O)		SPISOMIC[(3)] (I/O)
	GPIO71		EM1D13 (I/O)		CANTXA (O)	SCIRXDB (I)		SPICLKC[(3)] (I/O)
	GPIO72		EM1D12 (I/O)		CANTXB (O)	SCITXDC (O)		$\overline{\text{SPISTEC}}$[(3)] (I/O)
	GPIO73		EM1D11 (I/O)	XCLKOUT (O)	CANRXB (I)	SCIRXDC (I)		
	GPIO74		EM1D10 (I/O)					
	GPIO75		EM1D9 (I/O)					
	GPIO76		EM1D8 (I/O)			SCITXDD (O)		
	GPIO77		EM1D7 (I/O)			SCIRXDD (I)		
	GPIO78		EM1D6 (I/O)			EQEP2A (I)		
	GPIO79		EM1D5 (I/O)			EQEP2B (I)		
	GPIO80		EM1D4 (I/O)			EQEP2S (I/O)		
	GPIO81		EM1D3 (I/O)			EQEP2I (I/O)		
	GPIO82		EM1D2 (I/O)					
	GPIO83		EM1D1 (I/O)					
	GPIO84				SCITXDA (O)	MDXB (O)		MDXA (O)
	GPIO85		EM1D0 (I/O)		SCIRXDA (I)	MDRB (I)		MDRA (I)
	GPIO86		EM1A13 (O)	EM1CAS (O)	SCITXDB (O)	MCLKXB (I/O)		MCLKXA (I/O)
	GPIO87		EM1A14 (O)	EM1RAS (O)	SCIRXDB (I)	MFSXB (I/O)		MFSXA (I/O)
	GPIO88		EM1A15 (O)	EM1DQM0 (O)				
	GPIO89		EM1A16 (O)	EM1DQM1 (O)		SCITXDC (O)		

(3) High-Speed SPI-enabled GPIO mux option. This pin mux option is required when using the SPI in High-Speed Mode (HS_MODE = 1 in SPICCR). This mux option is still available when not using the SPI in High-Speed Mode (HS_MODE = 0 in SPICCR).

Copyright © 2014–2020, Texas Instruments Incorporated

Table 4-3. GPIO Muxed Pins[(1)(2)] (continued)

	GPIO Mux Selection							
GPIO Index	**0, 4, 8, 12**	**1**	**2**	**3**	**5**	**6**	**7**	**15**
GPyGMUXn. GPIOz =	**00b, 01b, 10b, 11b**	**00b**			**01b**			**11b**
GPyMUXn. GPIOz =	**00b**	**01b**	**10b**	**11b**	**01b**	**10b**	**11b**	**11b**
	GPIO90		EM1A17 (O)	EM1DQM2 (O)		SCIRXDC (I)		
	GPIO91		EM1A18 (O)	EM1DQM3 (O)		SDAA (I/OD)		
	GPIO92		EM1A19 (O)	EM1BA1 (O)		SCLA (I/OD)		
	GPIO93			EM1BA0 (O)		SCITXDD (O)		
	GPIO94					SCIRXDD (I)		
	GPIO95							
	GPIO96			EM2DQM1 (O)	EQEP1A (I)			
	GPIO97			EM2DQM0 (O)	EQEP1B (I)			
	GPIO98			EM2A0 (O)	EQEP1S (I/O)			
	GPIO99			EM2A1 (O)	EQEP1I (I/O)			
	GPIO100			EM2A2 (O)	EQEP2A (I)	SPISIMOC (I/O)		
	GPIO101			EM2A3 (O)	EQEP2B (I)	SPISOMIC (I/O)		
	GPIO102			EM2A4 (O)	EQEP2S (I/O)	SPICLKC (I/O)		
	GPIO103			EM2A5 (O)	EQEP2I (I/O)	$\overline{\text{SPISTEC}}$ (I/O)		
	GPIO104	SDAA (I/OD)		EM2A6 (O)	EQEP3A (I)	SCITXDD (O)		
	GPIO105	SCLA (I/OD)		EM2A7 (O)	EQEP3B (I)	SCIRXDD (I)		
	GPIO106			EM2A8 (O)	EQEP3S (I/O)	SCITXDC (O)		
	GPIO107			EM2A9 (O)	EQEP3I (I/O)	SCIRXDC (I)		
	GPIO108			EM2A10 (O)				
	GPIO109			EM2A11 (O)				
	GPIO110			EM2WAIT (I)				
	GPIO111			EM2BA0 (O)				
	GPIO112			EM2BA1 (O)				
	GPIO113			EM2CAS (O)				
	GPIO114			EM2RAS (O)				
	GPIO115			$\overline{\text{EM2CS0}}$ (O)				
	GPIO116			$\overline{\text{EM2CS2}}$ (O)				
	GPIO117			EM2SDCKE (O)				
	GPIO118			EM2CLK (O)				
	GPIO119			EM2RNW (O)				
	GPIO120			$\overline{\text{EM2WE}}$ (O)				USB0PFLT
	GPIO121			$\overline{\text{EM2OE}}$ (O)				USB0EPEN
	GPIO122					SPISIMOC (I/O)	SD1_D1 (I)	
	GPIO123					SPISOMIC (I/O)	SD1_C1 (I)	
	GPIO124					SPICLKC (I/O)	SD1_D2 (I)	
	GPIO125					$\overline{\text{SPISTEC}}$ (I/O)	SD1_C2 (I)	
	GPIO126						SD1_D3 (I)	
	GPIO127						SD1_C3 (I)	
	GPIO128						SD1_D4 (I)	
	GPIO129						SD1_C4 (I)	
	GPIO130						SD2_D1 (I)	
	GPIO131						SD2_C1 (I)	
	GPIO132						SD2_D2 (I)	
	GPIO133/ AUXCLKIN						SD2_C2 (I)	
	GPIO134						SD2_D3 (I)	
	GPIO135					SCITXDA (O)	SD2_C3 (I)	
	GPIO136					SCIRXDA (I)	SD2_D4 (I)	
	GPIO137					SCITXDB (O)	SD2_C4 (I)	
	GPIO138					SCIRXDB (I)		
	GPIO139					SCIRXDC (I)		
	GPIO140					SCITXDC (O)		

Copyright © 2014–2020, Texas Instruments Incorporated

Table 4-3. GPIO Muxed Pins[(1)(2)] (continued)

	GPIO Mux Selection							
GPIO Index	**0, 4, 8, 12**	**1**	**2**	**3**	**5**	**6**	**7**	**15**
GPyGMUXn. GPIOz =	**00b, 01b, 10b, 11b**	**00b**			**01b**			**11b**
GPyMUXn. GPIOz =	**00b**	**01b**	**10b**	**11b**	**01b**	**10b**	**11b**	**11b**
	GPIO141					SCIRXDD (I)		
	GPIO142					SCITXDD (O)		
	GPIO143							
	GPIO144							
	GPIO145	EPWM1A (O)						
	GPIO146	EPWM1B (O)						
	GPIO147	EPWM2A (O)						
	GPIO148	EPWM2B (O)						
	GPIO149	EPWM3A (O)						
	GPIO150	EPWM3B (O)						
	GPIO151	EPWM4A (O)						
	GPIO152	EPWM4B (O)						
	GPIO153	EPWM5A (O)						
	GPIO154	EPWM5B (O)						
	GPIO155	EPWM6A (O)						
	GPIO156	EPWM6B (O)						
	GPIO157	EPWM7A (O)						
	GPIO158	EPWM7B (O)						
	GPIO159	EPWM8A (O)						
	GPIO160	EPWM8B (O)						
	GPIO161	EPWM9A (O)						
	GPIO162	EPWM9B (O)						
	GPIO163	EPWM10A (O)						
	GPIO164	EPWM10B (O)						
	GPIO165	EPWM11A (O)						
	GPIO166	EPWM11B (O)						
	GPIO167	EPWM12A (O)						
	GPIO168	EPWM12B (O)						

4.4.2 Input X-BAR

The Input X-BAR is used to route any GPIO input to the ADC, eCAP, and ePWM peripherals as well as to external interrupts (XINT) (see Figure 4-7). Table 4-4 shows the input X-BAR destinations. For details on configuring the Input X-BAR, see the Crossbar (X-BAR) chapter of the *TMS320F2837xS Microcontrollers Technical Reference Manual*.

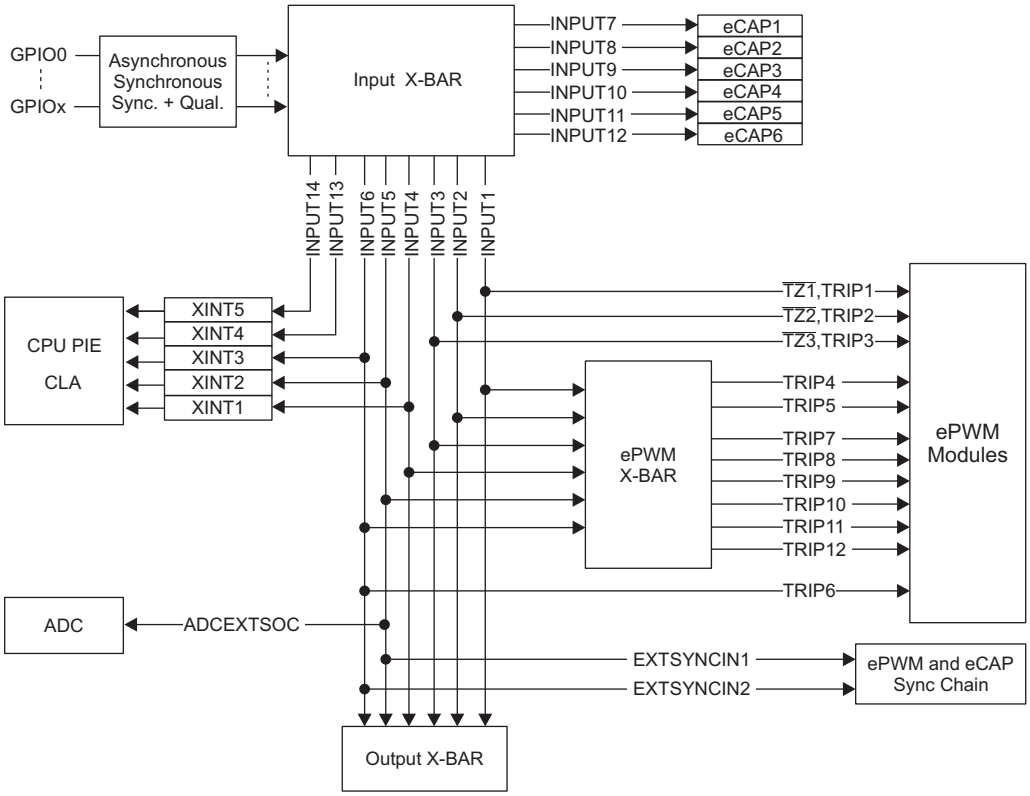

Figure 4-7. Input X-BAR

Table 4-4. Input X-BAR Destinations

INPUT	DESTINATIONS
INPUT1	EPWM[TZ1,TRIP1], EPWM X-BAR, Output X-BAR
INPUT2	EPWM[TZ2,TRIP2], EPWM X-BAR, Output X-BAR
INPUT3	EPWM[TZ3,TRIP3], EPWM X-BAR, Output X-BAR
INPUT4	XINT1, EPWM X-BAR, Output X-BAR
INPUT5	XINT2, ADCEXTSOC, EXTSYNCIN1, EPWM X-BAR, Output X-BAR
INPUT6	XINT3, EPWM[TRIP6], EXTSYNCIN2, EPWM X-BAR, Output X-BAR
INPUT7	ECAP1
INPUT8	ECAP2
INPUT9	ECAP3
INPUT10	ECAP4
INPUT11	ECAP5
INPUT12	ECAP6
INPUT13	XINT4
INPUT14	XINT5

Copyright © 2014–2020, Texas Instruments Incorporated

4.4.3 Output X-BAR and ePWM X-BAR

The Output X-BAR has eight outputs which can be selected on the GPIO mux as OUTPUTXBARx. The ePWM X-BAR has eight outputs which are connected to the TRIPx inputs of the ePWM. The sources for both the Output X-BAR and ePWM X-BAR are shown in Figure 4-8. For details on the Output X-BAR and ePWM X-BAR, see the Crossbar (X-BAR) chapter of the *TMS320F2837xS Microcontrollers Technical Reference Manual*.

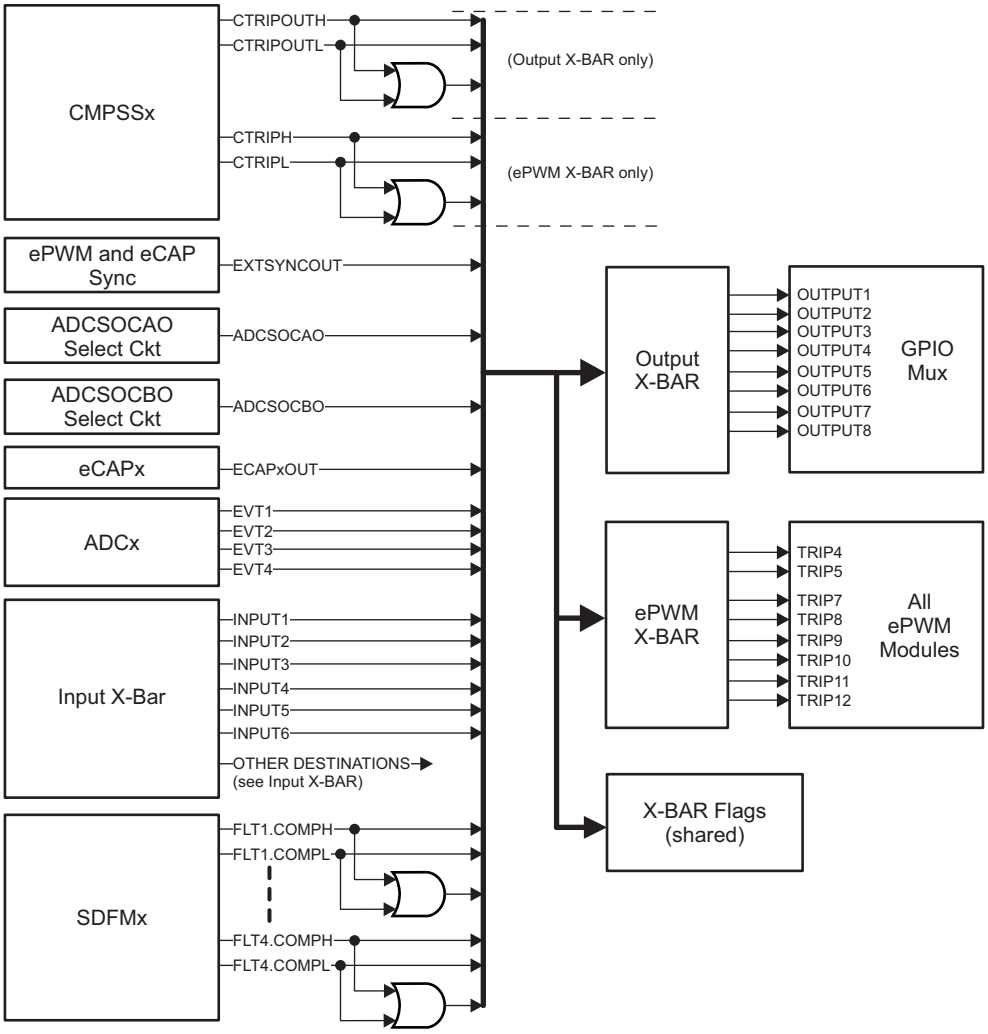

Figure 4-8. Output X-BAR and ePWM X-BAR

4.4.4 USB Pin Muxing

Table 4-5 shows assignment of the alternate USB function mapping. These can be configured with the GPBAMSEL register.

Table 4-5. Alternate USB Function

GPIO	GPBAMSEL SETTING	USB FUNCTION
GPIO42	GPBAMSEL[10] = 1b	USB0DM
GPIO43	GPBAMSEL[11] = 1b	USB0DP

4.4.5 High-Speed SPI Pin Muxing

The SPI module on this device has a high-speed mode. To achieve the highest possible speed, a special GPIO configuration is used on a single GPIO mux option for each SPI. These GPIOs may also be used by the SPI when not in high-speed mode (HS_MODE = 0).

To select the mux options that enable the SPI high-speed mode, configure the GPyGMUX and GPyMUX registers as shown in Table 4-6.

Table 4-6. GPIO Configuration for High-Speed SPI

GPIO	SPI SIGNAL	MUX CONFIGURATION	
SPIA			
GPIO58	SPISIMOA	GPBGMUX2[21:20]=11b	GPBMUX2[21:20]=11b
GPIO59	SPISOMIA	GPBGMUX2[23:22]=11b	GPBMUX2[23:22]=11b
GPIO60	SPICLKA	GPBGMUX2[25:24]=11b	GPBMUX2[25:24]=11b
GPIO61	$\overline{\text{SPISTEA}}$	GPBGMUX2[27:26]=11b	GPBMUX2[27:26]=11b
SPIB			
GPIO63	SPISIMOB	GPBGMUX2[31:30]=11b	GPBMUX2[31:30]=11b
GPIO64	SPISOMIB	GPCGMUX1[1:0]=11b	GPCMUX1[1:0]=11b
GPIO65	SPICLKB	GPCGMUX1[3:2]=11b	GPCMUX1[3:2]=11b
GPIO66	$\overline{\text{SPISTEB}}$	GPCGMUX1[5:4]=11b	GPCMUX1[5:4]=11b
SPIC			
GPIO69	SPISIMOC	GPCGMUX1[11:10]=11b	GPCMUX1[11:10]=11b
GPIO70	SPISOMIC	GPCGMUX1[13:12]=11b	GPCMUX1[13:12]=11b
GPIO71	SPICLKC	GPCGMUX1[15:14]=11b	GPCMUX1[15:14]=11b
GPIO72	$\overline{\text{SPISTEC}}$	GPCGMUX1[17:16]=11b	GPCMUX1[17:16]=11b

Copyright © 2014–2020, Texas Instruments Incorporated

4.5 Connections for Unused Pins

For applications that do not need to use all functions of the device, Table 4-7 lists acceptable conditioning for any unused pins. When multiple options are listed in Table 4-7, any are acceptable. Pins not listed in Table 4-7 must be connected according to Table 4-1.

Table 4-7. Connections for Unused Pins

SIGNAL NAME	ACCEPTABLE PRACTICE
Analog	
V_{REFHIx}	Tie to V_{DDA}
V_{REFLOx}	Tie to V_{SSA}
ADCINx	• No Connect • Tie to V_{SSA}
Digital	
GPIOx	• No connection (input mode with internal pullup enabled) • No connection (output mode with internal pullup disabled) • Pullup or pulldown resistor (any value resistor, input mode, and with internal pullup disabled)
X1	Tie to V_{SS}
X2	No Connect
TCK	• No Connect • Pullup resistor
TDI	• No Connect • Pullup resistor
TDO	No Connect
TMS	No Connect
$\overline{TRST}$	Pulldown resistor (2.2 kΩ or smaller)
VREGENZ	Tie to V_{DDIO}. VREG is not supported.
ERRORSTS	No Connect
FLT1	No Connect
FLT2	No Connect
Power and Ground	
V_{DD}	All V_{DD} pins must be connected per Table 4-1.
V_{DDA}	If a dedicated analog supply is not used, tie to V_{DDIO}.
V_{DDIO}	All V_{DDIO} pins must be connected per Table 4-1.
V_{DD3VFL}	Must be tied to V_{DDIO}
V_{DDOSC}	Must be tied to V_{DDIO}
V_{SS}	All V_{SS} pins must be connected to board ground.
V_{SSA}	If a dedicated analog ground is not used, tie to V_{SS}.
V_{SSOSC}	If an external crystal is not used, this pin may be connected to the board ground.

5 Specifications

5.1 Absolute Maximum Ratings[(1)(2)]

over operating free-air temperature range (unless otherwise noted)

		MIN	MAX	UNIT
Supply voltage	V_{DDIO} with respect to V_{SS}	–0.3	4.6	V
	V_{DD3VFL} with respect to V_{SS}	–0.3	4.6	
	V_{DDOSC} with respect to V_{SS}	–0.3	4.6	
	V_{DD} with respect to V_{SS}	–0.3	1.5	
Analog voltage	V_{DDA} with respect to V_{SSA}	–0.3	4.6	V
Input voltage	V_{IN} (3.3 V)	–0.3	4.6	V
Output voltage	V_O	–0.3	4.6	V
Input clamp current	Digital/analog input (per pin), I_{IK} ($V_{IN} < V_{SS}$ or $V_{IN} > V_{DDIO}$)[(3)]	–20	20	mA
	Analog input (per pin), $I_{IKANALOG}$ ($V_{IN} < V_{SSA}$ or $V_{IN} > V_{DDA}$)	–20	20	
	Total for all inputs, $I_{IKTOTAL}$ ($V_{IN} < V_{SS}/V_{SSA}$ or $V_{IN} > V_{DDIO}/V_{DDA}$)	–20	20	
Output current	Digital output (per pin), I_{OUT}	–20	20	mA
Free-Air temperature	T_A	–40	125	°C
Operating junction temperature	T_J	–40	150	°C
Storage temperature[(4)]	T_{stg}	–65	150	°C

(1) Stresses beyond those listed under absolute maximum ratings may cause permanent damage to the device. These are stress ratings only, and functional operation of the device at these or any other conditions beyond those indicated under Section 5.4 is not implied. Exposure to absolute-maximum-rated conditions for extended periods may affect device reliability.
(2) All voltage values are with respect to V_{SS}, unless otherwise noted.
(3) Continuous clamp current per pin is ±2 mA. Do not operate in this condition continuously as V_{DDIO}/V_{DDA} voltage may internally rise and impact other electrical specifications.
(4) Long-term high-temperature storage or extended use at maximum temperature conditions may result in a reduction of overall device life. For additional information, see *Semiconductor and IC Package Thermal Metrics*.

Copyright © 2014–2020, Texas Instruments Incorporated

5.2 ESD Ratings – Commercial

			VALUE	UNIT
TMS320F28379S, TMS320F28376S, TMS320F28375S, and TMS320F23874S in 337-ball ZWT package				
$V_{(ESD)}$	Electrostatic discharge (ESD)	Human-body model (HBM), per ANSI/ESDA/JEDEC JS-001 (1)	±2000	V
		Charged-device model (CDM), per JEDEC specification JESD22-C101 or ANSI/ESDA/JEDEC JS-002 (2)	±500	
TMS320F28379S, TMS320F28378S, TMS320F28376S, TMS320F28375S, and TMS320F23874S in 176-pin PTP package				
$V_{(ESD)}$	Electrostatic discharge (ESD)	Human-body model (HBM), per ANSI/ESDA/JEDEC JS-001 (1)	±2000	V
		Charged-device model (CDM), per JEDEC specification JESD22-C101 or ANSI/ESDA/JEDEC JS-002 (2)	±500	
TMS320F28379S, TMS320F28378S, TMS320F28376S, and TMS320F23874S in 100-pin PZP package				
$V_{(ESD)}$	Electrostatic discharge (ESD)	Human-body model (HBM), per ANSI/ESDA/JEDEC JS-001 (1)	±2000	V
		Charged-device model (CDM), per JEDEC specification JESD22-C101 or ANSI/ESDA/JEDEC JS-002 (2)	±500	

(1) JEDEC document JEP155 states that 500-V HBM allows safe manufacturing with a standard ESD control process.
(2) JEDEC document JEP157 states that 250-V CDM allows safe manufacturing with a standard ESD control process.

5.3 ESD Ratings – Automotive

				VALUE	UNIT
TMS320F28377S in 337-ball ZWT package					
$V_{(ESD)}$	Electrostatic discharge	Human body model (HBM), per AEC Q100-002 (1)	All pins	±2000	V
		Charged device model (CDM), per AEC Q100-011	All pins	±500	
			Corner balls on 337-ball ZWT: A1, A19, W1, W19	±750	
TMS320F28377S in 176-pin PTP package					
$V_{(ESD)}$	Electrostatic discharge	Human body model (HBM), per AEC Q100-002 (1)	All pins	±2000	V
		Charged device model (CDM), per AEC Q100-011	All pins	±500	
			Corner pins on 176-pin PTP: 1, 44, 45, 88, 89, 132, 133, 176	±750	
TMS320F28377S and TMS320F28375S in 100-pin PZP package					
$V_{(ESD)}$	Electrostatic discharge	Human body model (HBM), per AEC Q100-002 (1)	All pins	±2000	V
		Charged device model (CDM), per AEC Q100-011	All pins	±500	
			Corner pins on 100-pin PZP: 1, 25, 26, 50, 51, 75, 76, 100	±750	

(1) AEC Q100-002 indicates HBM stressing is done in accordance with the ANSI/ESDA/JEDEC JS-001 specification.

5.4 Recommended Operating Conditions

		MIN	NOM	MAX	UNIT
Device supply voltage, I/O, V_{DDIO} (1)		3.14	3.3	3.47	V
Device supply voltage, V_{DD}		1.14	1.2	1.26	V
Supply ground, V_{SS}			0		V
Analog supply voltage, V_{DDA}		3.14	3.3	3.47	V
Analog ground, V_{SSA}			0		V
Junction temperature, T_J	T version	–40		105	°C
	S version (2)	–40		125	
	Q version (AEC Q100 qualification) (2)	–40		150	
Free-Air temperature, T_A	Q version (AEC Q100 qualification)	–40		125	°C

(1) V_{DDIO}, V_{DD3VFL}, and V_{DDOSC} should be maintained within 0.3 V of each other.
(2) Operation above T_J = 105°C for extended duration will reduce the lifetime of the device. See *Calculating Useful Lifetimes of Embedded Processors* for more information.

Copyright © 2014–2020, Texas Instruments Incorporated

5.5 Power Consumption Summary

Current values listed in this section are representative for the test conditions given and not the absolute maximum possible. The actual device currents in an application will vary with application code and pin configurations. Table 5-1 shows the device current consumption at 200-MHz SYSCLK.

Table 5-1. Device Current Consumption at 200-MHz SYSCLK

MODE	TEST CONDITIONS	I_{DD}		I_{DDIO} (1)		I_{DDA}		I_{DD3VFL}	
		TYP (2)	MAX (3)	TYP (2)	MAX (3)	TYP (2)	MAX (3)	TYP (2)	MAX (3)
Operational	• Code is running out of RAM. (4) • All I/O pins are left unconnected. • Peripherals not active have their clocks disabled. • FLASH is read and in active state. • XCLKOUT is enabled at SYSCLK/4.	245 mA	400 mA	30 mA		13 mA	20 mA	33 mA	40 mA
IDLE	• CPU1 is in IDLE mode. • Flash is powered down. • XCLKOUT is turned off.	80 mA	215 mA	3 mA	10 mA	10 µA	150 µA	10 µA	150 µA
STANDBY	• CPU1 is in STANDBY mode. • Flash is powered down. • XCLKOUT is turned off.	30 mA	170 mA	3 mA	10 mA	5 µA	150 µA	10 µA	150 µA
HALT	• CPU1 watchdog is running. • Flash is powered down. • XCLKOUT is turned off.	1.5 mA	120 mA	750 µA	2 mA	5 µA	150 µA	10 µA	150 µA
HIBERNATE	• CPU1.M0 and CPU1.M1 RAMs are in low-power data retention mode.	300 µA	5 mA	750 µA	2 mA	5 µA	75 µA	1 µA	50 µA
Flash Erase/Program (5)	• CPU1 is running from RAM. • All I/O pins are left unconnected. • Peripheral clocks are disabled. • CPU1 is performing Flash Erase and Programming. • XCLKOUT is turned off.	154 mA	230 mA	3 mA	10 mA	10 µA	150 µA	45 mA	55 mA

(1) I_{DDIO} current is dependent on the electrical loading on the I/O pins.
(2) TYP: V_{nom}, 30°C
(3) MAX: V_{max}, 125°C
(4) The following is executed in a loop on CPU1:
- All of the communication peripherals are exercised in loop-back mode: CAN-A to CAN-B; SPI-A to SPI-C; SCI-A to SCI-D; I2C-A to I2C-B; McBSP-A to McBSP-B; USB
- SDFM1 to SDFM4 active
- ePWM1 to ePWM12 generate 400-kHz PWM output on 24 pins
- CPU TIMERs active
- DMA does 32-bit burst transfers
- CLA1 does multiply-accumulate tasks
- All ADCs perform continuous conversion
- All DACs ramp voltage up/down at 150 kHz
- CMPSS1 to CMPSS8 active
- VCU does complex multiply/accumulate with parallel load
- TMU calculates a cosine
- FPU does multiply/accumulate with parallel load

(5) Brownout events during flash programming can corrupt flash data. Programming environments using alternate power sources (such as a USB programmer) must be capable of supplying the rated current for the device and other system components with sufficient margin to avoid supply brownout conditions.

Copyright © 2014–2020, Texas Instruments Incorporated

5.5.1 Current Consumption Graphs

Figure 5-1 and Figure 5-2 are a typical representation of the relationship between frequency and current consumption/power on the device. The operational test from Table 5-1 was run across frequency at V_{max} and high temperature. Actual results will vary based on the system implementation and conditions.

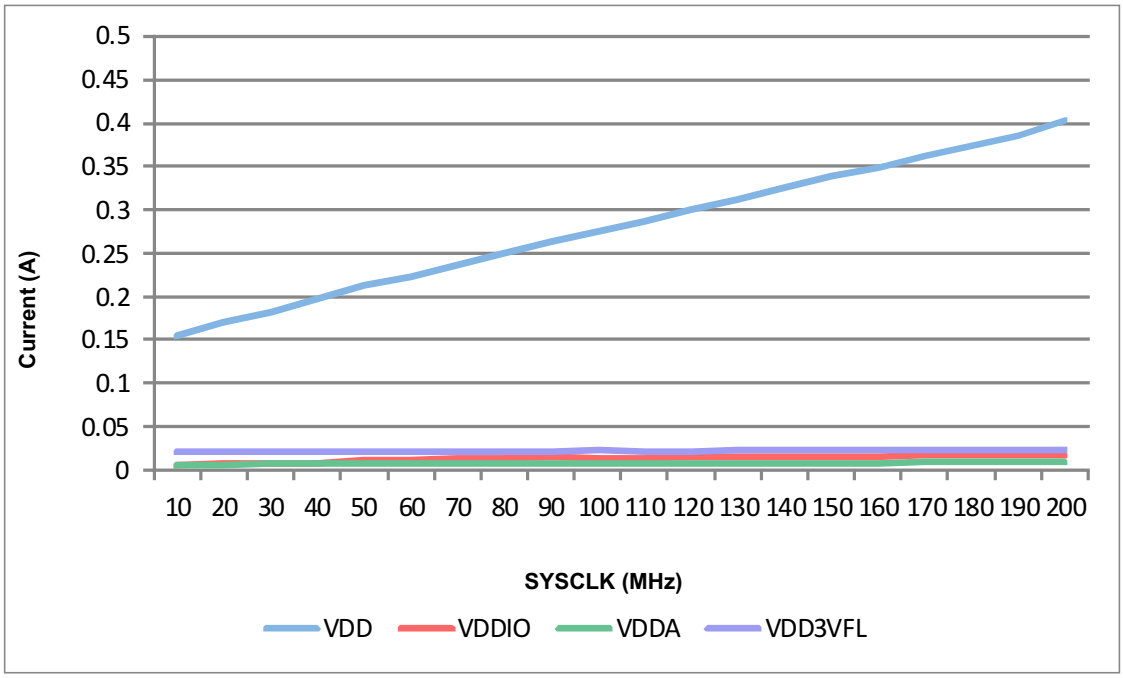

Figure 5-1. Operational Current Versus Frequency

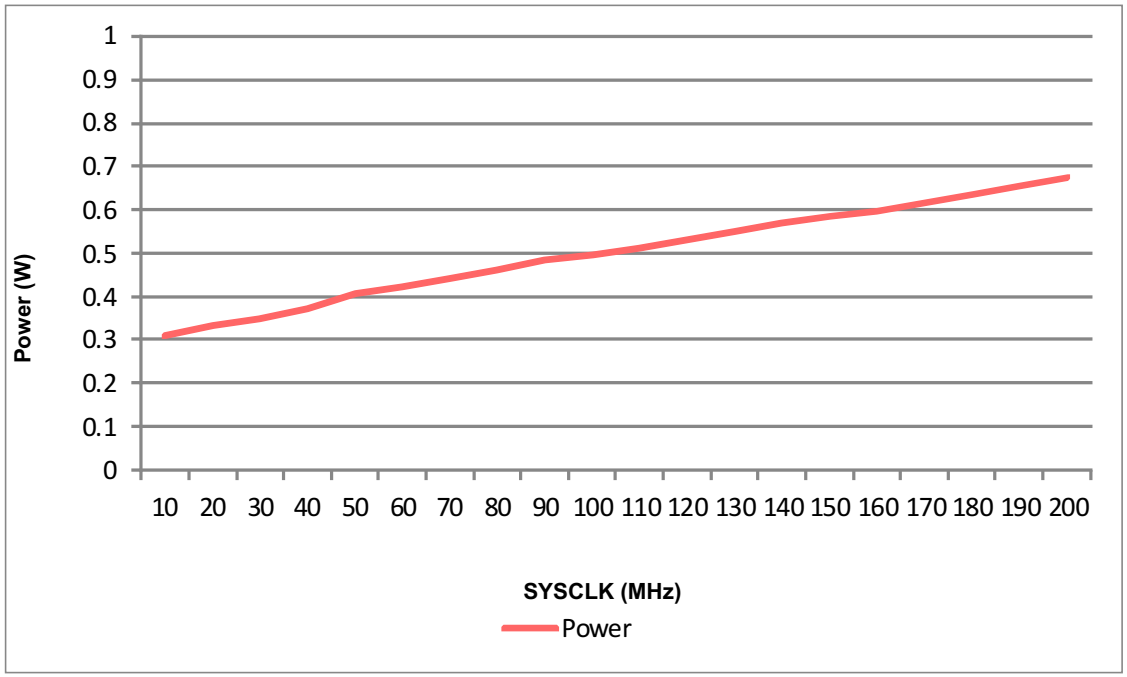

Figure 5-2. Power Versus Frequency

Copyright © 2014–2020, Texas Instruments Incorporated

Leakage current will increase with operating temperature in a nonlinear manner. The difference in V_{DD} current between TYP and MAX conditions can be seen in Figure 5-3. The current consumption in HALT mode is primarily leakage current as there is no active switching if the internal oscillator has been powered down.

Figure 5-3 shows the typical leakage current across temperature. The device was placed into HALT mode under nominal voltage conditions.

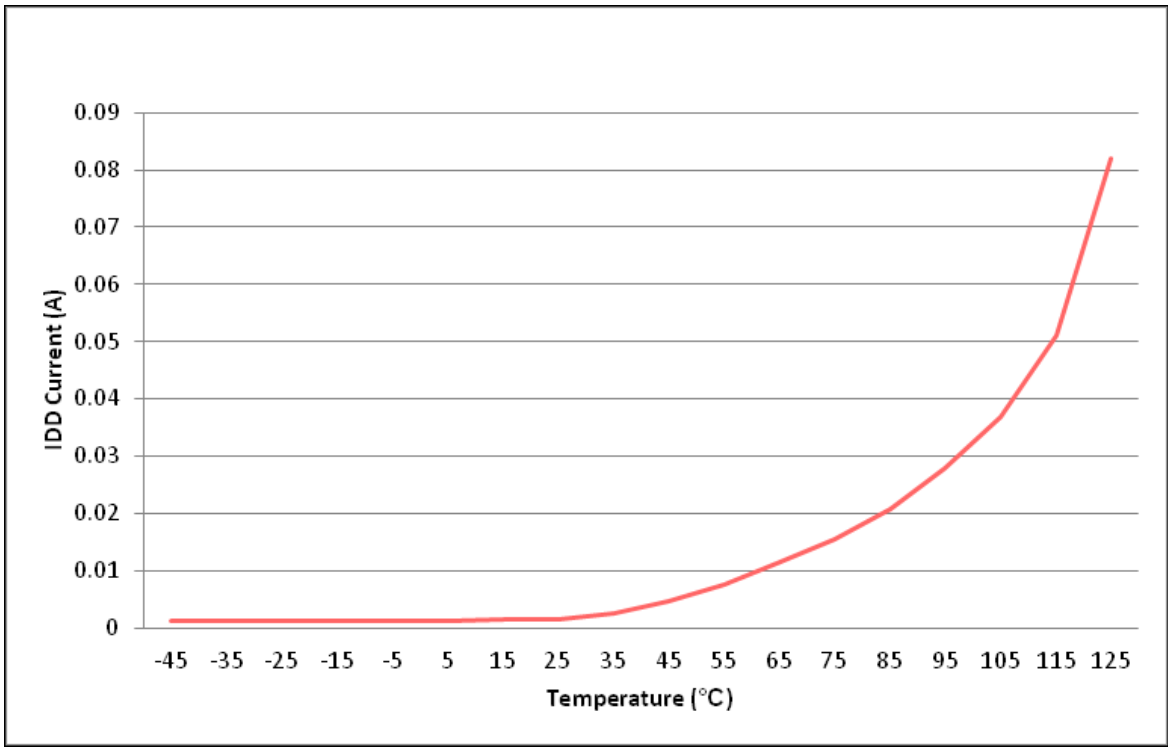

Figure 5-3. I_{DD} Leakage Current Versus Temperature

5.5.2 Reducing Current Consumption

The F2837xS devices provide some methods to reduce the device current consumption:

- Any one of the four low-power modes—IDLE, STANDBY, HALT, and HIBERNATE—could be entered during idle periods in the application.
- The flash module may be powered down if the code is run from RAM.
- Disable the pullups on pins that assume an output function.
- Each peripheral has an individual clock-enable bit (PCLKCRx). Reduced current consumption may be achieved by turning off the clock to any peripheral that is not used in a given application. Table 5-2 indicates the typical current reduction that may be achieved by disabling the clocks using the PCLKCRx register.
- To realize the lowest V_{DDA} current consumption in a low-power mode, see the respective analog chapter of the *TMS320F2837xS Microcontrollers Technical Reference Manual* to ensure each module is powered down as well.

Table 5-2. Current on V_{DD} Supply by Various Peripherals (at 200 MHz)(1)

PERIPHERAL MODULE(2)	I_{DD} CURRENT REDUCTION (mA)
ADC(3)	3.3
CAN	3.3
CLA	1.4
CMPSS(3)	1.4
CPUTIMER	0.3
DAC(3)	0.6
DMA	2.9
eCAP	0.6
EMIF1	2.9
EMIF2	2.6
ePWM1 to ePWM4(4)	4.5
ePWM5 to ePWM12(4)	1.7
HRPWM(4)	1.7
I2C	1.3
McBSP	1.6
SCI	0.9
SDFM	2
SPI	0.5
uPP	7.3
USB and AUXPLL at 60 MHz	23.8

(1) At V_{max} and 125°C.
(2) All peripherals are disabled upon reset. Use the PCLKCRx register to individually enable peripherals. For peripherals with multiple instances, the current quoted is for a single module.
(3) This number represents the current drawn by the digital portion of the ADC, CMPSS, and DAC modules.
(4) The ePWM is at /2 of SYSCLK.

Copyright © 2014–2020, Texas Instruments Incorporated

5.6 Electrical Characteristics

over recommended operating conditions (unless otherwise noted)

PARAMETER			TEST CONDITIONS	MIN	TYP	MAX	UNIT
V_{OH}	High-level output voltage		I_{OH} = I_{OH} MIN	V_{DDIO} * 0.8			V
			I_{OH} = –100 µA	V_{DDIO} – 0.2			
V_{OL}	Low-level output voltage		I_{OL} = I_{OL} MAX			0.4	V
			I_{OL} = 100 µA			0.2	
I_{OH}	High-level output source current for all output pins			–4			mA
I_{OL}	Low-level output sink current for all output pins					4	mA
V_{IH}	High-level input voltage (3.3 V)	GPIO0–GPIO7, GPIO42–GPIO43, GPIO46–GPIO47		V_{DDIO} * 0.7		V_{DDIO} + 0.3	V
		All other pins		2.0		V_{DDIO} + 0.3	
V_{IL}	Low-level input voltage (3.3 V)			V_{SS} – 0.3		0.8	V
$V_{HYSTERESIS}$	Input hysteresis				150		mV
$I_{pulldown}$	Input current	Digital inputs with pulldown(1)	V_{DDIO} = 3.3 V V_{IN} = V_{DDIO}		120		µA
I_{pullup}	Input current	Digital inputs with pullup enabled(1)	V_{DDIO} = 3.3 V V_{IN} = 0 V		150		µA
I_{LEAK}	Pin leakage	Digital	Pullups disabled 0 V ≤ V_{IN} ≤ V_{DDIO}			2	µA
		Analog (except ADCINB0 or DACOUTx)	0 V ≤ V_{IN} ≤ V_{DDA}			2	
		ADCINB0			2	11(2)	
		DACOUTx			66		
C_I	Input capacitance				2		pF
$V_{DDIO-POR}$	V_{DDIO} power-on reset voltage				2.3		V

(1) See Table 4-2 for a list of pins with a pullup or pulldown.
(2) The MAX input leakage shown on ADCINB0 is at high temperature.

5.7 Thermal Resistance Characteristics

5.7.1 ZWT Package

		°C/W(1)	AIR FLOW (lfm)(2)
$R\Theta_{JC}$	Junction-to-case thermal resistance	8.3	N/A
$R\Theta_{JB}$	Junction-to-board thermal resistance	11.6	N/A
$R\Theta_{JA}$ (High k PCB)	Junction-to-free air thermal resistance	21.5	0
$R\Theta_{JMA}$	Junction-to-moving air thermal resistance	19.0	150
		17.8	250
		16.5	500
Psi_{JT}	Junction-to-package top	0.2	0
		0.3	150
		0.4	250
		0.5	500
Psi_{JB}	Junction-to-board	11.4	0
		11.3	150
		11.2	250
		11.0	500

(1) These values are based on a JEDEC-defined 2S2P system (with the exception of the Theta JC [$R\Theta_{JC}$] value, which is based on a JEDEC-defined 1S0P system) and will change based on environment as well as application. For more information, see these EIA/JEDEC standards:
- JESD51-2, *Integrated Circuits Thermal Test Method Environmental Conditions - Natural Convection (Still Air)*
- JESD51-3, *Low Effective Thermal Conductivity Test Board for Leaded Surface Mount Packages*
- JESD51-7, *High Effective Thermal Conductivity Test Board for Leaded Surface Mount Packages*
- JESD51-9, *Test Boards for Area Array Surface Mount Package Thermal Measurements*

(2) lfm = linear feet per minute

5.7.2 PTP Package

		°C/W(1)	AIR FLOW (lfm)(2)
$R\Theta_{JC}$	Junction-to-case thermal resistance	6.97	N/A
$R\Theta_{JB}$	Junction-to-board thermal resistance	6.05	N/A
$R\Theta_{JA}$ (High k PCB)	Junction-to-free air thermal resistance	17.8	0
$R\Theta_{JMA}$	Junction-to-moving air thermal resistance	12.8	150
		11.4	250
		10.1	500
Psi_{JT}	Junction-to-package top	0.11	0
		0.24	150
		0.33	250
		0.42	500
Psi_{JB}	Junction-to-board	6.1	0
		5.5	150
		5.4	250
		5.3	500

(1) These values are based on a JEDEC-defined 2S2P system (with the exception of the Theta JC [$R\Theta_{JC}$] value, which is based on a JEDEC-defined 1S0P system) and will change based on environment as well as application. For more information, see these EIA/JEDEC standards:
- JESD51-2, *Integrated Circuits Thermal Test Method Environmental Conditions - Natural Convection (Still Air)*
- JESD51-3, *Low Effective Thermal Conductivity Test Board for Leaded Surface Mount Packages*
- JESD51-7, *High Effective Thermal Conductivity Test Board for Leaded Surface Mount Packages*
- JESD51-9, *Test Boards for Area Array Surface Mount Package Thermal Measurements*

(2) lfm = linear feet per minute

Copyright © 2014–2020, Texas Instruments Incorporated

5.7.3 PZP Package

		°C/W(1)	AIR FLOW (lfm)(2)
$R\Theta_{JC}$	Junction-to-case thermal resistance	4.3	N/A
$R\Theta_{JB}$	Junction-to-board thermal resistance	5.9	N/A
$R\Theta_{JA}$ (High k PCB)	Junction-to-free air thermal resistance	19.1	0
$R\Theta_{JMA}$	Junction-to-moving air thermal resistance	14.3	150
		12.8	250
		11.4	500
Psi_{JT}	Junction-to-package top	0.03	0
		0.09	150
		0.12	250
		0.20	500
Psi_{JB}	Junction-to-board	6.0	0
		5.5	150
		5.5	250
		5.3	500

(1) These values are based on a JEDEC-defined 2S2P system (with the exception of the Theta JC [$R\Theta_{JC}$] value, which is based on a JEDEC-defined 1S0P system) and will change based on environment as well as application. For more information, see these EIA/JEDEC standards:
- JESD51-2, *Integrated Circuits Thermal Test Method Environmental Conditions - Natural Convection (Still Air)*
- JESD51-3, *Low Effective Thermal Conductivity Test Board for Leaded Surface Mount Packages*
- JESD51-7, *High Effective Thermal Conductivity Test Board for Leaded Surface Mount Packages*
- JESD51-9, *Test Boards for Area Array Surface Mount Package Thermal Measurements*

(2) lfm = linear feet per minute

5.8 Thermal Design Considerations

Based on the end application design and operational profile, the I_{DD} and I_{DDIO} currents could vary. Systems that exceed the recommended maximum power dissipation in the end product may require additional thermal enhancements. Ambient temperature (T_A) varies with the end application and product design. The critical factor that affects reliability and functionality is T_J, the junction temperature, not the ambient temperature. Hence, care should be taken to keep T_J within the specified limits. T_{case} should be measured to estimate the operating junction temperature T_J. T_{case} is normally measured at the center of the package top-side surface. The thermal application report *Semiconductor and IC Package Thermal Metrics* helps to understand the thermal metrics and definitions.

5.9 System

5.9.1 Power Sequencing

5.9.1.1 Signal Pin Requirements

Before powering the device, no voltage larger than 0.3 V above V_{DDIO} can be applied to any digital pin, and no voltage larger than 0.3 V above V_{DDA} can be applied to any analog pin (including V_{REFHI}).

5.9.1.2 V_{DDIO}, V_{DDA}, V_{DD3VFL}, and V_{DDOSC} Requirements

The 3.3-V supplies should be powered up together and kept within 0.3 V of each other during functional operation.

5.9.1.3 V_{DD} Requirements

The internal VREG is not supported. The VREGENZ pin must be tied to V_{DDIO} and an external source used to supply 1.2 V to V_{DD}. During the ramp, V_{DD} should be kept no more than 0.3 V above V_{DDIO}.

V_{DDOSC} and V_{DD} must be powered on and off at the same time. V_{DDOSC} should not be powered on when V_{DD} is off. For applications not powering V_{DDOSC} and V_{DD} at the same time, see the "INTOSC: V_{DDOSC} Powered Without V_{DD} Can Cause INTOSC Frequency Drift" advisory in the *TMS320F2837xS MCUs Silicon Errata*.

There is an internal 12.8-mA current source from V_{DD3VFL} to V_{DD} when the flash banks are active. When the flash banks are active and the device is in a low-activity state (for example, a low-power mode), this internal current source can cause V_{DD} to rise to approximately 1.3 V. There will be zero current load to the external system V_{DD} regulator while in this condition. This is not an issue for most regulators; however, if the system voltage regulator requires a minimum load for proper operation, then an external 82Ω resistor can be added to the board to ensure a minimal current load on V_{DD}. See the "Low-Power Modes: Power Down Flash or Maintain Minimum Device Activity" advisory in the *TMS320F2837xS MCUs Silicon Errata*.

5.9.1.4 Supply Ramp Rate

The supplies should ramp to full rail within 10 ms. Table 5-3 shows the supply ramp rate.

Table 5-3. Supply Ramp Rate

		MIN	MAX	UNIT
Supply ramp rate	V_{DDIO}, V_{DD}, V_{DDA}, V_{DD3VFL}, V_{DDOSC} with respect to V_{SS}	330	10^5	V/s

5.9.1.5 Supply Supervision

An internal power-on-reset (POR) circuit keeps the I/Os in a high-impedance state during power up. External supply voltage supervisors (SVS) can be used to monitor the voltage on the 3.3-V and 1.2-V rails and drive $\overline{XRS}$ low when supplies are outside operational specifications.

NOTE

If the supply voltage is held near the POR threshold, then the device may drive periodic resets onto the $\overline{XRS}$ pin.

5.9.2 Reset Timing

$\overline{XRS}$ is the device reset pin. It functions as an input and open-drain output. The device has a built-in power-on reset (POR). During power up, the POR circuit drives the $\overline{XRS}$ pin low. A watchdog or NMI watchdog reset also drives the pin low. An external circuit may drive the pin to assert a device reset.

Copyright © 2014–2020, Texas Instruments Incorporated

A resistor with a value from 2.2 kΩ to 10 kΩ should be placed between $\overline{XRS}$ and V_{DDIO}. A capacitor should be placed between $\overline{XRS}$ and V_{SS} for noise filtering; the capacitance should be 100 nF or smaller. These values will allow the watchdog to properly drive the $\overline{XRS}$ pin to V_{OL} within 512 OSCCLK cycles when the watchdog reset is asserted. Figure 5-4 shows the recommended reset circuit.

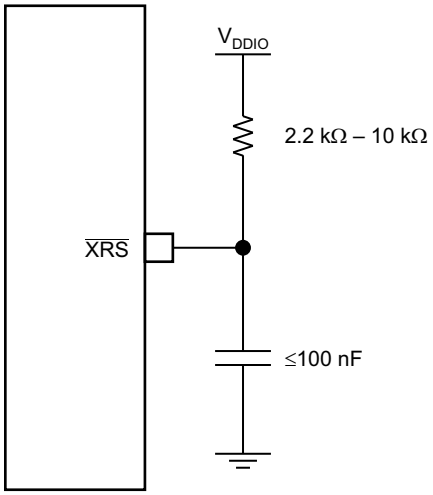

Figure 5-4. Reset Circuit

5.9.2.1 Reset Sources

The following reset sources exist on this device: $\overline{XRS}$, $\overline{WDRS}$, $\overline{NMIWDRS}$, $\overline{SYSRS}$, $\overline{SCCRESET}$, and $\overline{HIBRESET}$. See the Reset Signals table in the System Control chapter of the *TMS320F2837xS Microcontrollers Technical Reference Manual*.

The parameter $t_{h(boot\text{-}mode)}$ must account for a reset initiated from any of these sources.

> **CAUTION**
>
> Some reset sources are internally driven by the device. Some of these sources will drive $\overline{XRS}$ low. Use this to disable any other devices driving the boot pins. The $\overline{SCCRESET}$ and debugger reset sources do not drive $\overline{XRS}$; therefore, the pins used for boot mode should not be actively driven by other devices in the system. The boot configuration has a provision for changing the boot pins in OTP; for more details, see the *TMS320F2837xS Microcontrollers Technical Reference Manual*.

5.9.2.2 Reset Electrical Data and Timing

Table 5-4 shows the reset ($\overline{XRS}$) timing requirements. Table 5-5 shows the reset ($\overline{XRS}$) switching characteristics. Figure 5-5 shows the power-on reset. Figure 5-6 shows the warm reset.

Table 5-4. Reset ($\overline{XRS}$) Timing Requirements

		MIN	MAX	UNIT
$t_{h(boot\text{-}mode)}$	Hold time for boot-mode pins	1.5		ms
$t_{w(RSL2)}$	Pulse duration, $\overline{XRS}$ low on warm reset	3.2		µs

Table 5-5. Reset ($\overline{XRS}$) Switching Characteristics

over recommended operating conditions (unless otherwise noted)

PARAMETER		MIN	TYP	MAX	UNIT
$t_{w(RSL1)}$	Pulse duration, $\overline{XRS}$ driven low by device after supplies are stable		100		µs
$t_{w(WDRS)}$	Pulse duration, reset pulse generated by watchdog		$512t_{c(OSCCLK)}$		cycles

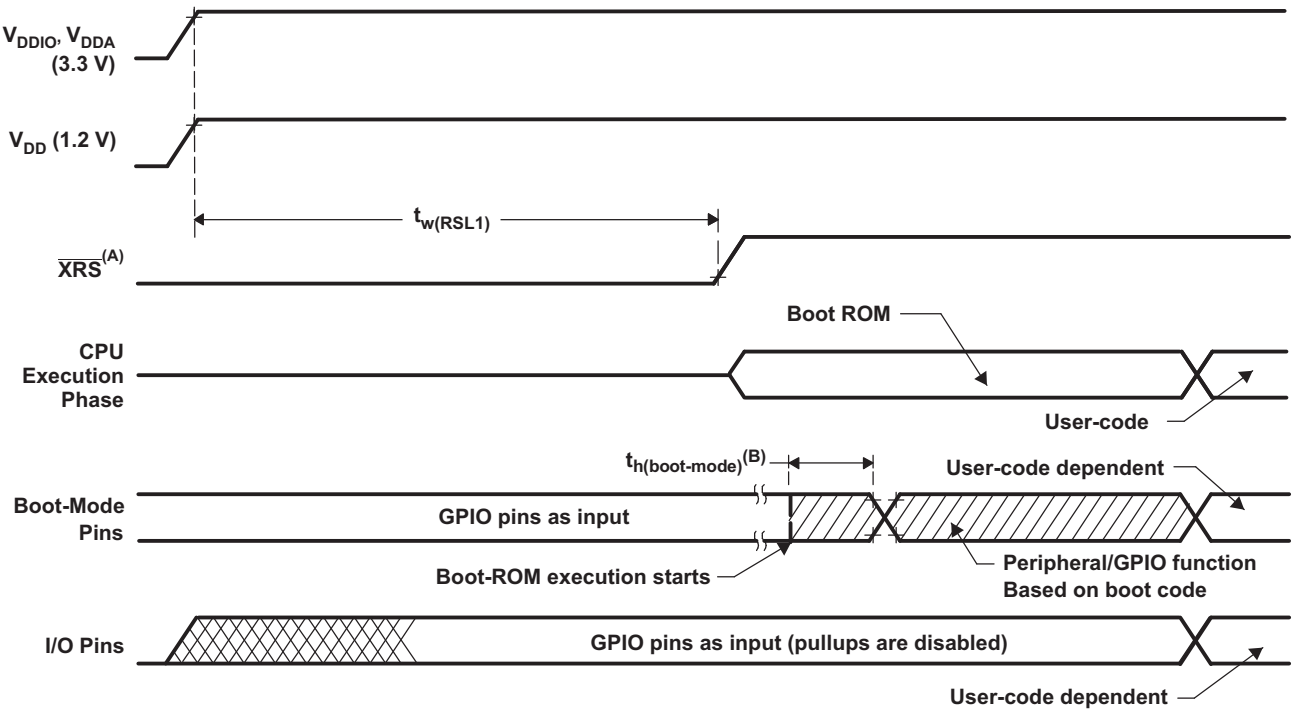

A. The $\overline{XRS}$ pin can be driven externally by a supervisor or an external pullup resistor, see Table 4-1.

B. After reset from any source (see Section 5.9.2.1), the boot ROM code samples Boot Mode pins. Based on the status of the Boot Mode pin, the boot code branches to destination memory or boot code function. If boot ROM code executes after power-on conditions (in debugger environment), the boot code execution time is based on the current SYSCLK speed. The SYSCLK will be based on user environment and could be with or without PLL enabled.

Figure 5-5. Power-on Reset

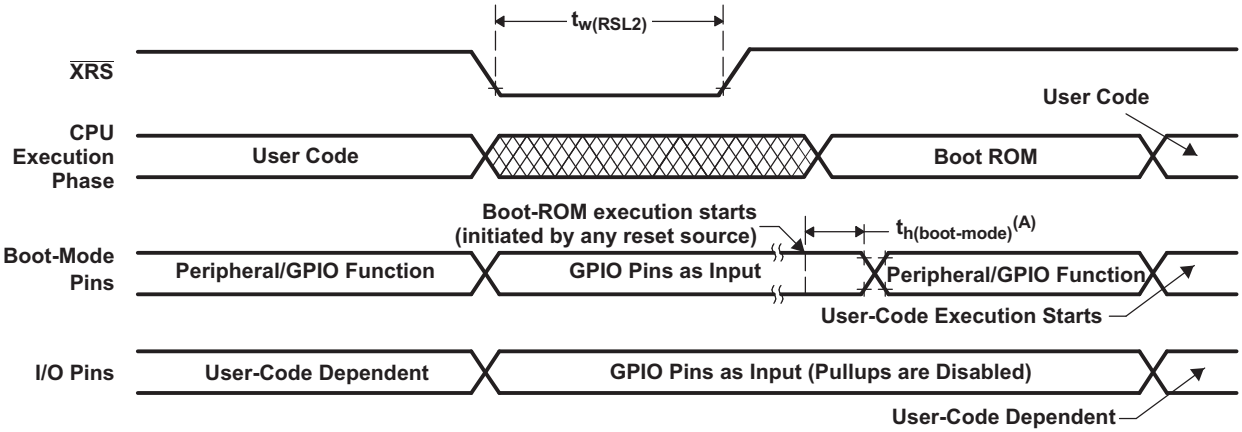

A. After reset from any source (see Section 5.9.2.1), the Boot ROM code samples BOOT Mode pins. Based on the status of the Boot Mode pin, the boot code branches to destination memory or boot code function. If Boot ROM code executes after power-on conditions (in debugger environment), the Boot code execution time is based on the current SYSCLK speed. The SYSCLK will be based on user environment and could be with or without PLL enabled.

Figure 5-6. Warm Reset

版权 © 2014–2020, Texas Instruments Incorporated

5.9.3 Clock Specifications

5.9.3.1 Clock Sources

表 5-6 lists four possible clock sources. 图 5-7 provides an overview of the device's clocking system.

表 5-6. Possible Reference Clock Sources

CLOCK SOURCE	MODULES CLOCKED	COMMENTS
INTOSC1	Can be used to provide clock for: • Watchdog block • Main PLL • CPU-Timer 2	Internal oscillator 1. Zero-pin overhead 10-MHz internal oscillator.
INTOSC2 (1)	Can be used to provide clock for: • Main PLL • Auxiliary PLL • CPU-Timer 2	Internal oscillator 2. Zero-pin overhead 10-MHz internal oscillator.
XTAL	Can be used to provide clock for: • Main PLL • Auxiliary PLL • CPU-Timer 2	External crystal or resonator connected between the X1 and X2 pins or single-ended clock connected to the X1 pin.
AUXCLKIN	Can be used to provide clock for: • Auxiliary PLL • CPU-Timer 2	Single-ended 3.3-V level clock source. GPIO133/AUXCLKIN pin should be used to provide the input clock.

(1) On reset, internal oscillator 2 (INTOSC2) is the default clock source for both system PLL (OSCCLK) and auxiliary PLL (AUXOSCCLK).

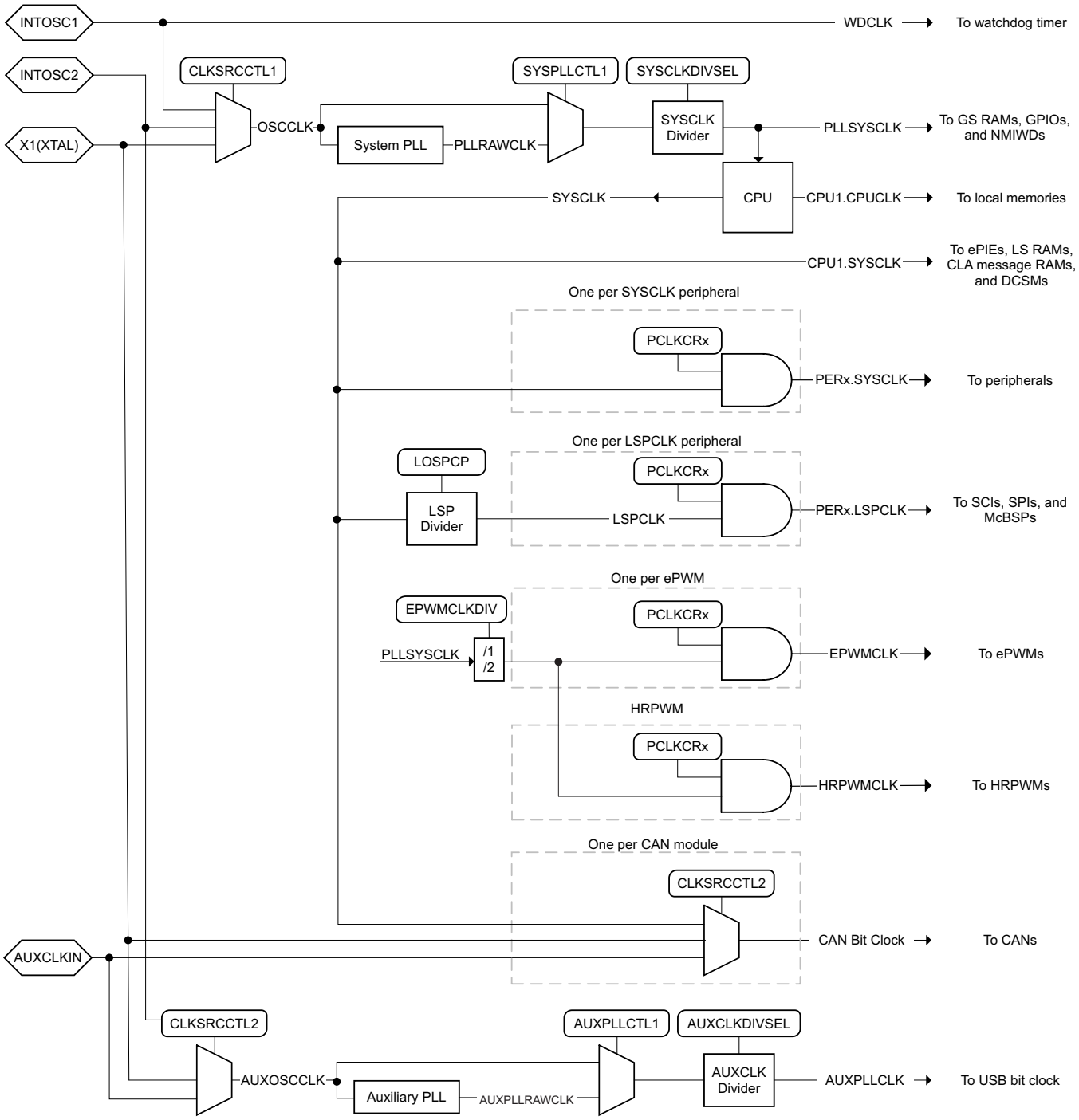

图 5-7. Clocking System

版权 © 2014–2020, Texas Instruments Incorporated

5.9.3.2 Clock Frequencies, Requirements, and Characteristics

This section provides the frequencies and timing requirements of the input clocks, PLL lock times, frequencies of the internal clocks, and the frequency and switching characteristics of the output clock.

5.9.3.2.1 Input Clock Frequency and Timing Requirements, PLL Lock Times

表 5-7 shows the frequency requirements for the input clocks. 表 5-16 shows the crystal equivalent series resistance requirements. 表 5-8 shows the X1 input level characteristics when using an external clock source. 表 5-9 and 表 5-10 show the timing requirements for the input clocks. 表 5-11 shows the PLL lock times for the Main PLL and the USB PLL.

表 5-7. Input Clock Frequency

		MIN	MAX	UNIT
$f_{(XTAL)}$	Frequency, X1/X2, from external crystal or resonator	10	20	MHz
$f_{(X1)}$	Frequency, X1, from external oscillator	2	25	MHz
$f_{(AUXI)}$	Frequency, AUXCLKIN, from external oscillator	2	60	MHz

表 5-8. X1 Input Level Characteristics When Using an External Clock Source (Not a Crystal)

over recommended operating conditions (unless otherwise noted)

PARAMETER		MIN	MAX	UNIT
X1 V_{IL}	Valid low-level input voltage	–0.3	0.3 * V_{DDIO}	V
X1 V_{IH}	Valid high-level input voltage	0.7 * V_{DDIO}	V_{DDIO} + 0.3	V

表 5-9. X1 Timing Requirements

		MIN	MAX	UNIT
$t_{f(X1)}$	Fall time, X1		6	ns
$t_{r(X1)}$	Rise time, X1		6	ns
$t_{w(X1L)}$	Pulse duration, X1 low as a percentage of $t_{c(X1)}$	45%	55%	
$t_{w(X1H)}$	Pulse duration, X1 high as a percentage of $t_{c(X1)}$	45%	55%	

表 5-10. AUXCLKIN Timing Requirements

		MIN	MAX	UNIT
$t_{f(AUXI)}$	Fall time, AUXCLKIN		6	ns
$t_{r(AUXI)}$	Rise time, AUXCLKIN		6	ns
$t_{w(AUXL)}$	Pulse duration, AUXCLKIN low as a percentage of $t_{c(XCI)}$	45%	55%	
$t_{w(AUXH)}$	Pulse duration, AUXCLKIN high as a percentage of $t_{c(XCI)}$	45%	55%	

表 5-11. PLL Lock Times

		MIN	NOM	MAX	UNIT
$t_{(PLL)}$	Lock time, Main PLL (X1, from external oscillator)		50 µs + 2500 * $t_{c(OSCCLK)}$ (1)		µs
$t_{(USB)}$	Lock time, USB PLL (AUXCLKIN, from external oscillator)		50 µs + 2500 * $t_{c(OSCCLK)}$ (1)		µs

(1) The PLL lock time here defines the typical time of execution for the PLL workaround as defined in the *TMS320F2837xS MCUs Silicon Errata*. Cycle count includes code execution of the PLL initialization routine, which could vary depending on compiler optimizations and flash wait states. TI recommends using the latest example software from C2000Ware for initializing the PLLs. For the system PLL, see InitSysPll() or SysCtl_setClock(). For the auxillary PLL, see InitAuxPll() or SysCtl_setAuxClock().

5.9.3.2.2 Internal Clock Frequencies

表 5-12 provides the clock frequencies for the internal clocks.

表 5-12. Internal Clock Frequencies

		MIN	NOM	MAX	UNIT
$f_{(SYSCLK)}$	Frequency, device (system) clock	2		200 (1)	MHz
$t_{c(SYSCLK)}$	Period, device (system) clock	5 (1)		500	ns
$f_{(PLLRAWCLK)}$	Frequency, system PLL output (before SYSCLK divider)	120		400	MHz
$f_{(AUXPLLRAWCLK)}$	Frequency, auxiliary PLL output (before AUXCLK divider)	120		400	MHz
$f_{(AUXPLL)}$	Frequency, AUXPLLCLK	2	60	60	MHz
$f_{(PLL)}$	Frequency, PLLSYSCLK	2		200 (1)	MHz
$f_{(LSP)}$	Frequency, LSPCLK	2		200 (1)	MHz
$t_{c(LSPCLK)}$	Period, LSPCLK	5 (1)		500	ns
$f_{(OSCCLK)}$	Frequency, OSCCLK (INTOSC1 or INTOSC2 or XTAL or X1)	See respective clock			MHz
$f_{(EPWM)}$	Frequency, EPWMCLK (2)			100	MHz
$f_{(HRPWM)}$	Frequency, HRPWMCLK	60		100	MHz

(1) Using an external clock source. If INTOSC1 or INTOSC2 is used as the clock source, then the maximum frequency is 194 MHz and the minimum period is 5.15 ns.
(2) For SYSCLK above 100 MHz, the EPWMCLK must be half of SYSCLK.

5.9.3.2.3 Output Clock Frequency and Switching Characteristics

表 5-13 provides the frequency of the output clock. 表 5-14 shows the switching characteristics of the output clock, XCLKOUT.

表 5-13. Output Clock Frequency

		MIN	MAX	UNIT
$f_{(XCO)}$	Frequency, XCLKOUT		50	MHz

表 5-14. XCLKOUT Switching Characteristics (PLL Bypassed or Enabled) (1) (2)

over recommended operating conditions (unless otherwise noted)

PARAMETER		MIN	MAX	UNIT
$t_{f(XCO)}$	Fall time, XCLKOUT		5	ns
$t_{r(XCO)}$	Rise time, XCLKOUT		5	ns
$t_{w(XCOL)}$	Pulse duration, XCLKOUT low	H – 2	H + 2	ns
$t_{w(XCOH)}$	Pulse duration, XCLKOUT high	H – 2	H + 2	ns

(1) A load of 40 pF is assumed for these parameters.
(2) $H = 0.5t_{c(XCO)}$

版权 © 2014–2020, Texas Instruments Incorporated

5.9.3.3 Input Clocks and PLLs

In addition to the internal 0-pin oscillators, multiple external clock source options are available. 图 5-8 shows the recommended methods of connecting crystals, resonators, and oscillators to pins X1/X2 (also referred to as XTAL) and AUXCLKIN.

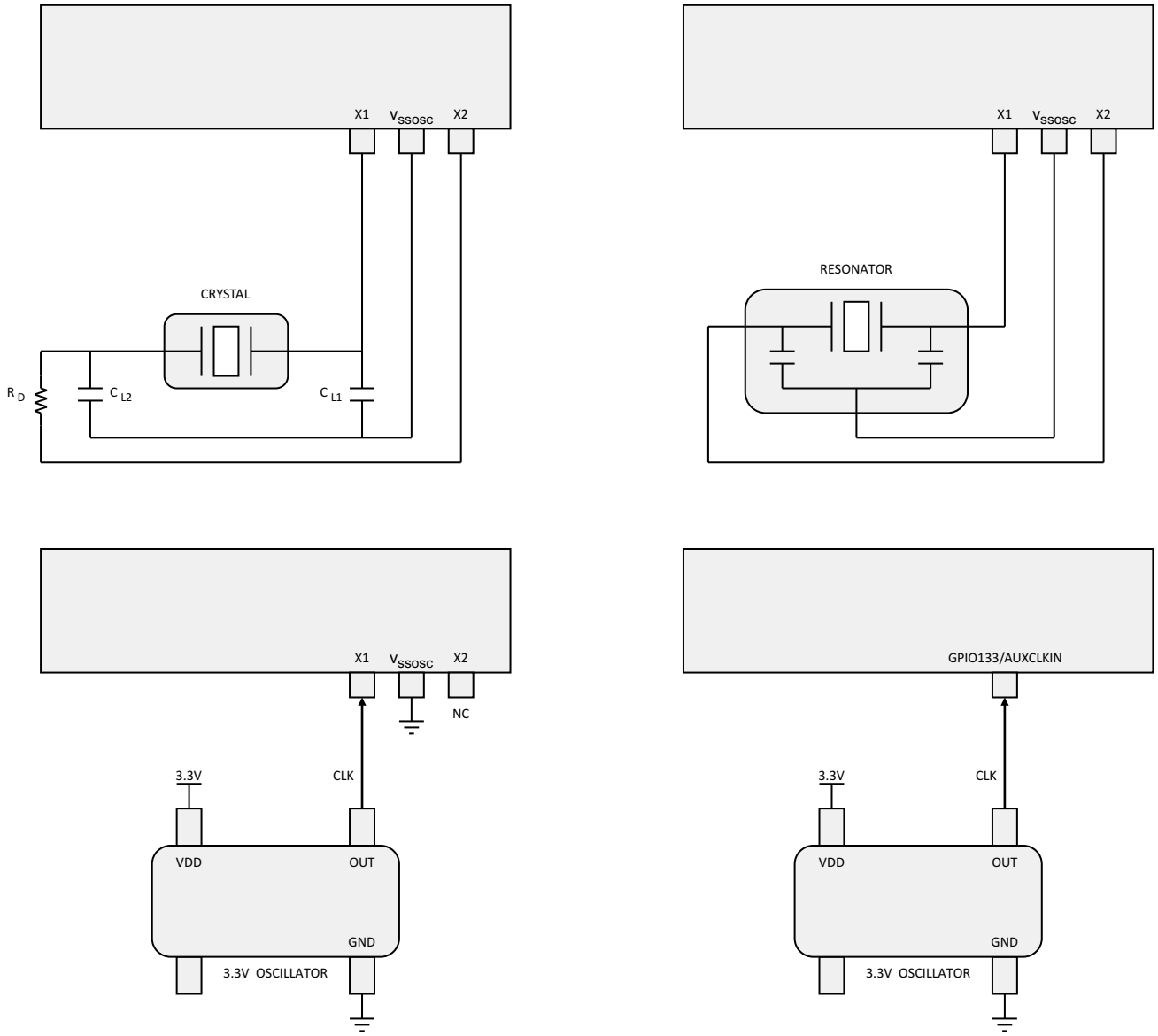

图 5-8. Connecting Input Clocks to a 2837xS Device

5.9.3.4 Crystal Oscillator

When using a quartz crystal, it may be necessary to include a damping resistor (R_D) in the crystal circuit to prevent over-driving the crystal (drive level can be found in the crystal data sheet). In higher-frequency applications (10 MHz or greater), R_D is generally not required. If a damping resistor is required, R_D should be as small as possible because the size of the resistance affects start-up time (smaller R_D = faster start-up time). TI recommends that the crystal manufacturer characterize the crystal with the application board. 表 5-15 shows the crystal oscillator parameters. 表 5-16 shows the crystal equivalent series resistance (ESR) requirements. 表 5-17 shows the crystal oscillator electrical characteristics.

表 5-15. Crystal Oscillator Parameters

		MIN	MAX	UNIT
CL1, CL2	Load capacitance	12	24	pF
C0	Crystal shunt capacitance		7	pF

表 5-16. Crystal Equivalent Series Resistance (ESR) Requirements (1) (2)

CRYSTAL FREQUENCY (MHz)	MAXIMUM ESR (Ω) (CL1 = CL2 = 12 pF)	MAXIMUM ESR (Ω) (CL1 = CL2 = 24 pF)
10	55	110
12	50	95
14	50	90
16	45	75
18	45	65
20	45	50

(1) Crystal shunt capacitance (C0) should be less than or equal to 7 pF.
(2) ESR = Negative Resistance/3

表 5-17. Crystal Oscillator Electrical Characteristics

over recommended operating conditions (unless otherwise noted)

PARAMETER	TEST CONDITIONS	MIN	TYP	MAX	UNIT
Start-up time (1)	f = 20 MHz ESR MAX = 50 Ω CL1 = CL2 = 24 pF C0 = 7 pF		2		ms
Crystal drive level (DL)				1	mW

(1) Start-up time is dependent on the crystal and tank circuit components. TI recommends that the crystal vendor characterize the application with the chosen crystal.

版权 © 2014–2020, Texas Instruments Incorporated

5.9.3.5 Internal Oscillators

To reduce production board costs and application development time, all F2837xS devices contain two independent internal oscillators, referred to as INTOSC1 and INTOSC2. By default, both oscillators are enabled at power up. INTOSC2 is set as the source for the system reference clock (OSCCLK) and INTOSC1 is set as the backup clock source. INTOSC1 can also be manually configured as the system reference clock (OSCCLK). Table 5-18 provides the electrical characteristics of the internal oscillators to determine if this module meets the clocking requirements of the application.

Table 5-18 provides the electrical characteristics of the two internal oscillators.

NOTE

This oscillator cannot be used as the PLL source if the PLLSYSCLK is configured to frequencies above 194 MHz.

Table 5-18. Internal Oscillator Electrical Characteristics

over recommended operating conditions (unless otherwise noted)

PARAMETER		TEST CONDITIONS	MIN	TYP	MAX	UNIT
$f_{(INTOSC)}$	Frequency, INTOSC1 and INTOSC2		9.7	10.0	10.3	MHz
$f_{(INTOSC\text{-}STABILITY)}$	Frequency stability at room temperature	30ºC, Nominal V_{DD}		±0.1%		
	Frequency stability over V_{DD}	30ºC		±0.2%		
	Frequency stability		–3.0%		3.0%	
$f_{(INTOSC\text{-}ST)}$	Start-up and settling time				20	µs

5.9.4 Flash Parameters

The on-chip flash memory is tightly integrated to the CPU, allowing code execution directly from flash through 128-bit-wide prefetch reads and a pipeline buffer. Flash performance for sequential code is equal to execution from RAM. Factoring in discontinuities, most applications will run with an efficiency of approximately 80% relative to code executing from RAM. This flash efficiency lets designers realize a 2× improvement in performance when migrating from the previous generation of MCUs. Note that an extra wait state is automatically added when code is fetched or data is read from Bank 1 (compared to that of Bank 0), even for prefetched data.

This device also has an OTP (One-Time-Programmable) sector used for the dual code security module (DCSM), which cannot be erased after it is programmed.

表 5-19 shows the minimum required flash wait states at different frequencies. 表 5-20 shows the flash parameters.

表 5-19. Flash Wait States

CPUCLK (MHz)		MINIMUM WAIT STATES (1)
EXTERNAL OSCILLATOR OR CRYSTAL	INTOSC1 OR INTOSC2	
150 < CPUCLK ≤ 200	145 < CPUCLK ≤ 194	3
100 < CPUCLK ≤ 150	97 < CPUCLK ≤ 145	2
50 < CPUCLK ≤ 100	48 < CPUCLK ≤ 97	1
CPUCLK ≤ 50	CPUCLK ≤ 48	0

(1) Minimum required FRDCNTL[RWAIT].

表 5-20. Flash Parameters

PARAMETER			MIN	TYP	MAX	UNIT
	Program Time(1)	128 data bits + 16 ECC bits		40	300	µs
		8KW sector		90	180	ms
		32KW sector		360	720	ms
	Erase Time(2) at < 25 cycles	8KW sector		25	50	ms
		32KW sector		30	55	
	Erase Time(2) at 20k cycles	8KW sector		105	4000	ms
		32KW sector		110	4000	
N_{wec}	Write/erase cycles				20000	cycles
$t_{retention}$	Data retention duration at T_J = 85°C		20			years

(1) Program time is at the maximum device frequency. Program time includes overhead of the flash state machine but does not include the time to transfer the following into RAM:
- Code that uses flash API to program the flash
- Flash API itself
- Flash data to be programmed

In other words, the time indicated in this table is applicable after all the required code/data is available in the device RAM, ready for programming. The transfer time will significantly vary depending on the speed of the debug probe used.
Program time calculation is based on programming 144 bits at a time at the specified operating frequency. Program time includes Program verify by the CPU. The program time does not degrade with write/erase (W/E) cycling, but the erase time does.
Erase time includes Erase verify by the CPU and does not involve any data transfer.

(2) Erase time includes Erase verify by the CPU.

注

The Main Array flash programming must be aligned to 64-bit address boundaries and each 64-bit word may only be programmed once per write/erase cycle. For more details, see the "Flash: Minimum Programming Word Size" advisory in the *TMS320F2837xS MCUs Silicon Errata*.

版权 © 2014–2020, Texas Instruments Incorporated

5.9.5 Emulation/JTAG

The JTAG port has five dedicated pins: $\overline{\text{TRST}}$, TMS, TDI, TDO, and TCK. The $\overline{\text{TRST}}$ signal should always be pulled down through a 2.2-kΩ pulldown resistor on the board. This MCU does not support the EMU0 and EMU1 signals that are present on 14-pin and 20-pin emulation headers. These signals should always be pulled up at the emulation header through a pair of board pullup resistors ranging from 2.2 kΩ to 4.7 kΩ (depending on the drive strength of the debugger ports). Typically, a 2.2-kΩ value is used.

See 图 5-9 to see how the 14-pin JTAG header connects to the MCU's JTAG port signals. 图 5-10 shows how to connect to the 20-pin header. The 20-pin JTAG header terminals EMU2, EMU3, and EMU4 are not used and should be grounded.

The PD (Power Detect) terminal of the debug probe header should be connected to the board 3.3-V supply. Header GND terminals should be connected to board ground. TDIS (Cable Disconnect Sense) should also be connected to board ground. The JTAG clock should be looped from the header TCK output terminal back to the RTCK input terminal of the header (to sense clock continuity by the debug probe). Header terminal $\overline{\text{RESET}}$ is an open-drain output from the debug probe header that enables board components to be reset through debug probe commands (available only through the 20-pin header).

Typically, no buffers are needed on the JTAG signals when the distance between the MCU target and the JTAG header is smaller than 6 inches (15.24 cm), and no other devices are present on the JTAG chain. Otherwise, each signal should be buffered. Additionally, for most debug probe operations at 10 MHz, no series resistors are needed on the JTAG signals. However, if high emulation speeds are expected (35 MHz or so), 22-Ω resistors should be placed in series on each JTAG signal.

For more information about hardware breakpoints and watchpoints, see Hardware Breakpoints and Watchpoints for C28x in CCS.

For more information about JTAG emulation, see the *XDS Target Connection Guide*.

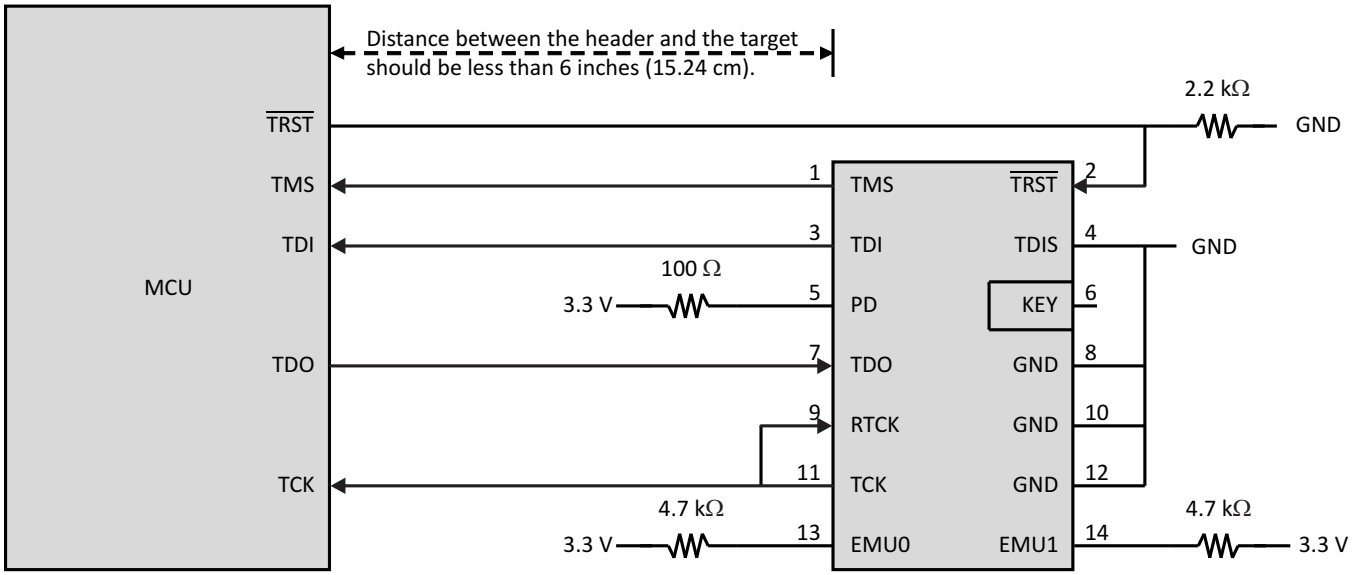

图 5-9. Connecting to the 14-Pin JTAG Header

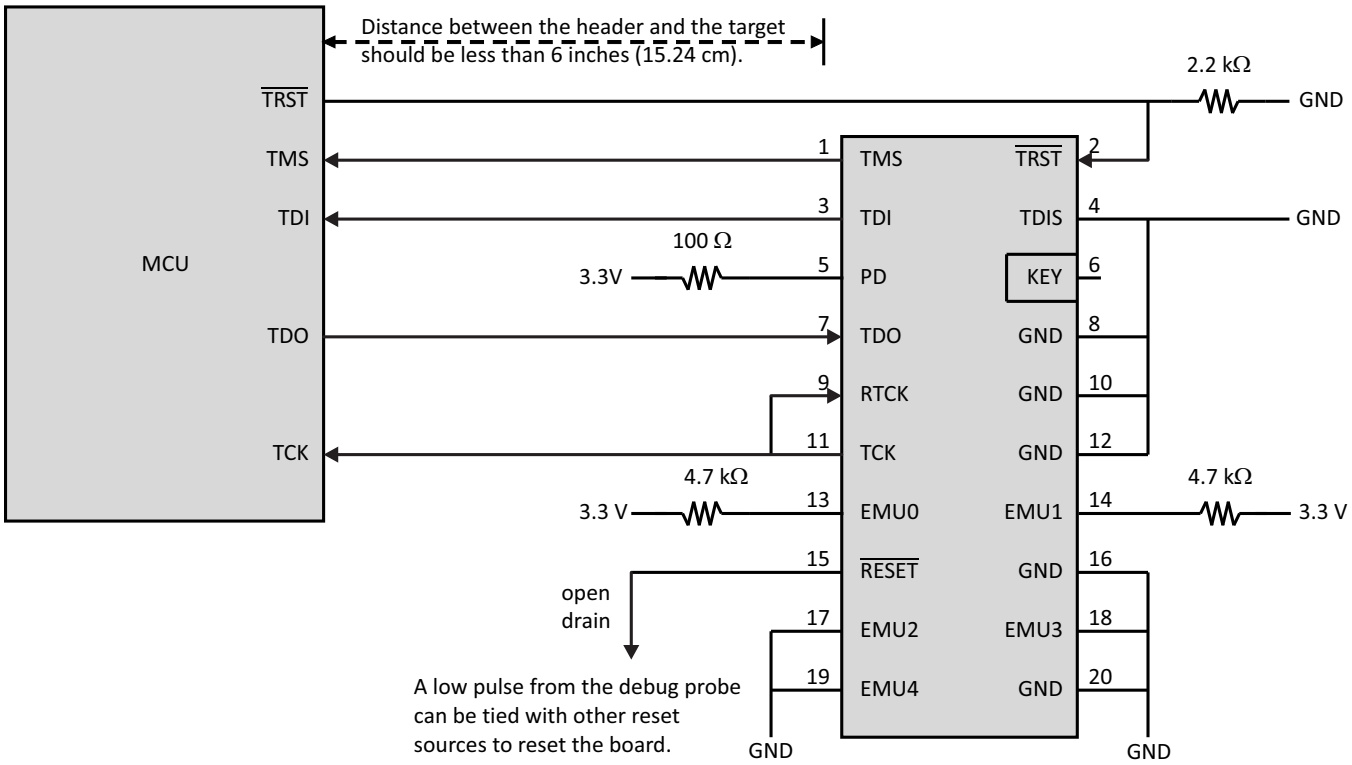

图 5-10. Connecting to the 20-Pin JTAG Header

版权 © 2014–2020, Texas Instruments Incorporated

5.9.5.1 JTAG Electrical Data and Timing

表 5-21 lists the JTAG timing requirements. 表 5-22 lists the JTAG switching characteristics. 图 5-11 shows the JTAG timing.

表 5-21. JTAG Timing Requirements

NO.			MIN	MAX	UNIT
1	$t_{c(TCK)}$	Cycle time, TCK	66.66		ns
1a	$t_{w(TCKH)}$	Pulse duration, TCK high (40% of t_c)	26.66		ns
1b	$t_{w(TCKL)}$	Pulse duration, TCK low (40% of t_c)	26.66		ns
3	$t_{su(TDI-TCKH)}$	Input setup time, TDI valid to TCK high	13		ns
	$t_{su(TMS-TCKH)}$	Input setup time, TMS valid to TCK high	13		ns
4	$t_{h(TCKH-TDI)}$	Input hold time, TDI valid from TCK high	7		ns
	$t_{h(TCKH-TMS)}$	Input hold time, TMS valid from TCK high	7		ns

表 5-22. JTAG Switching Characteristics

over recommended operating conditions (unless otherwise noted)

NO.	PARAMETER		MIN	MAX	UNIT
2	$t_{d(TCKL-TDO)}$	Delay time, TCK low to TDO valid	6	25	ns

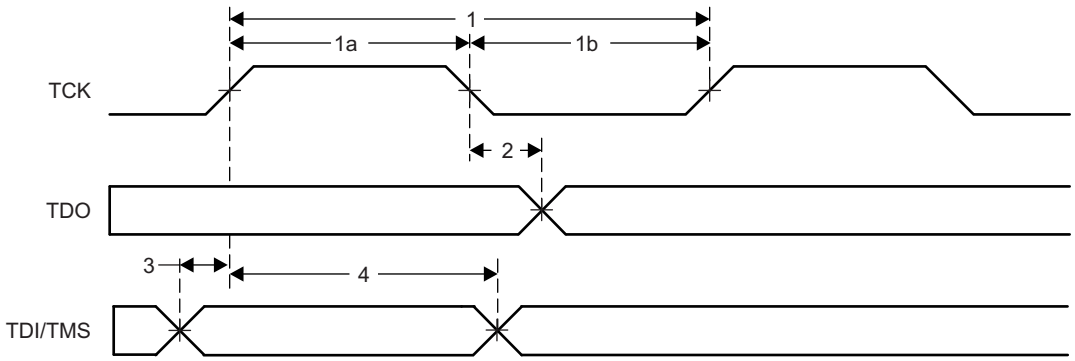

图 5-11. JTAG Timing

5.9.6 GPIO Electrical Data and Timing

The peripheral signals are multiplexed with general-purpose input/output (GPIO) signals. On reset, GPIO pins are configured as inputs. For specific inputs, the user can also select the number of input qualification cycles to filter unwanted noise glitches.

The GPIO module contains an Output X-BAR which allows an assortment of internal signals to be routed to a GPIO in the GPIO mux positions denoted as OUTPUTXBARx. The GPIO module also contains an Input X-BAR which is used to route signals from any GPIO input to different IP blocks such as the ADC(s), eCAP(s), ePWM(s), and external interrupts. For more details, see the X-BAR chapter in the *TMS320F2837xS Microcontrollers Technical Reference Manual*.

5.9.6.1 GPIO - Output Timing

Table 5-23 shows the general-purpose output switching characteristics. Figure 5-12 shows the general-purpose output timing.

Table 5-23. General-Purpose Output Switching Characteristics

over recommended operating conditions (unless otherwise noted)

PARAMETER			MIN	MAX	UNIT
$t_{r(GPO)}$	Rise time, GPIO switching low to high	All GPIOs		8[(1)]	ns
$t_{f(GPO)}$	Fall time, GPIO switching high to low	All GPIOs		8[(1)]	ns
t_{fGPO}	Toggling frequency, GPO pins			25	MHz

(1) Rise time and fall time vary with load. These values assume a 40-pF load.

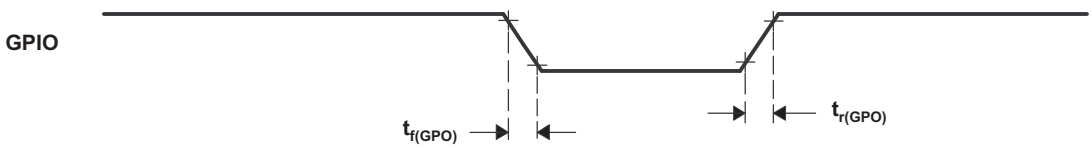

Figure 5-12. General-Purpose Output Timing

Copyright © 2014–2020, Texas Instruments Incorporated

5.9.6.2 GPIO - Input Timing

Table 5-24 shows the general-purpose input timing requirements. Figure 5-13 shows the sampling mode.

Table 5-24. General-Purpose Input Timing Requirements

			MIN	MAX	UNIT
$t_{w(SP)}$	Sampling period	QUALPRD = 0	$1t_{c(SYSCLK)}$		cycles
		QUALPRD ≠ 0	$2t_{c(SYSCLK)}$ * QUALPRD		cycles
$t_{w(IQSW)}$	Input qualifier sampling window		$t_{w(SP)}$ * (n(1) – 1)		cycles
$t_{w(GPI)}$ (2)	Pulse duration, GPIO low/high	Synchronous mode	$2t_{c(SYSCLK)}$		cycles
		With input qualifier	$t_{w(IQSW)}$ + $t_{w(SP)}$ + $1t_{c(SYSCLK)}$		cycles

(1) "n" represents the number of qualification samples as defined by GPxQSELn register.
(2) For $t_{w(GPI)}$, pulse width is measured from V_{IL} to V_{IL} for an active low signal and V_{IH} to V_{IH} for an active high signal.

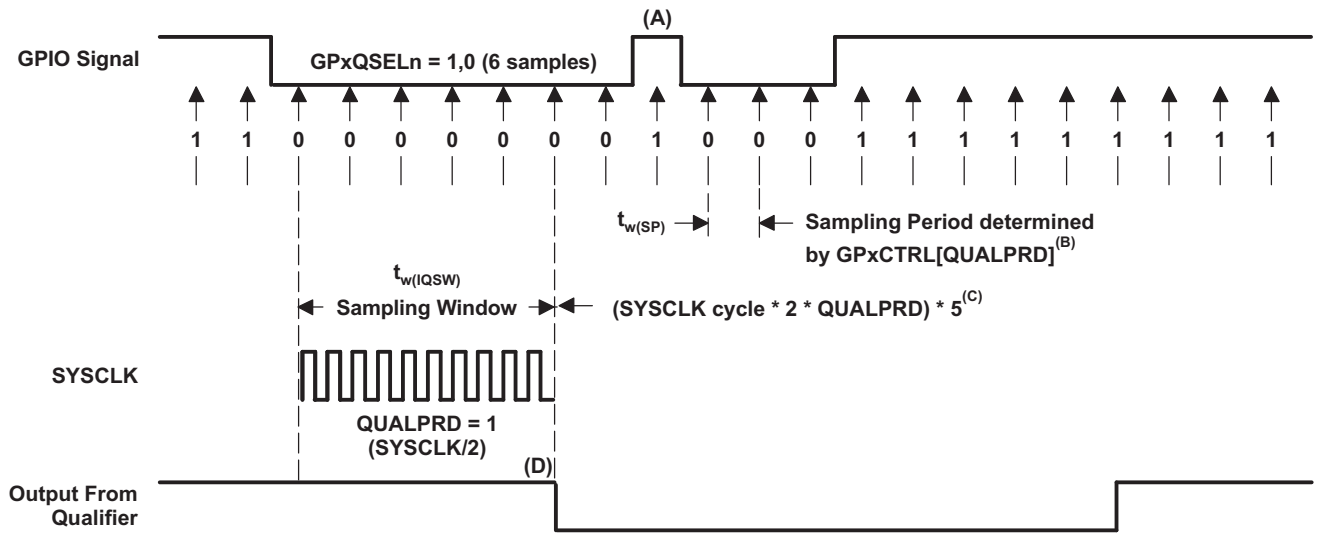

A. This glitch will be ignored by the input qualifier. The QUALPRD bit field specifies the qualification sampling period. It can vary from 00 to 0xFF. If QUALPRD = 00, then the sampling period is 1 SYSCLK cycle. For any other value "n", the qualification sampling period in 2n SYSCLK cycles (that is, at every 2n SYSCLK cycles, the GPIO pin will be sampled).

B. The qualification period selected through the GPxCTRL register applies to groups of 8 GPIO pins.

C. The qualification block can take either three or six samples. The GPxQSELn Register selects which sample mode is used.

D. In the example shown, for the qualifier to detect the change, the input should be stable for 10 SYSCLK cycles or greater. In other words, the inputs should be stable for (5 x QUALPRD x 2) SYSCLK cycles. This would ensure 5 sampling periods for detection to occur. Because external signals are driven asynchronously, an 13-SYSCLK-wide pulse ensures reliable recognition.

Figure 5-13. Sampling Mode

5.9.6.3 Sampling Window Width for Input Signals

The following section summarizes the sampling window width for input signals for various input qualifier configurations.

Sampling frequency denotes how often a signal is sampled with respect to SYSCLK.

Sampling frequency = SYSCLK/(2 × QUALPRD), if QUALPRD ≠ 0 (1)

Sampling frequency = SYSCLK, if QUALPRD = 0 (2)

Sampling period = SYSCLK cycle × 2 × QUALPRD, if QUALPRD ≠ 0 (3)

In Equation 1, Equation 2, and Equation 3, SYSCLK cycle indicates the time period of SYSCLK.

Sampling period = SYSCLK cycle, if QUALPRD = 0

In a given sampling window, either 3 or 6 samples of the input signal are taken to determine the validity of the signal. This is determined by the value written to GPxQSELn register.

Case 1:

Qualification using 3 samples

Sampling window width = (SYSCLK cycle × 2 × QUALPRD) × 2, if QUALPRD ≠ 0

Sampling window width = (SYSCLK cycle) × 2, if QUALPRD = 0

Case 2:

Qualification using 6 samples

Sampling window width = (SYSCLK cycle × 2 × QUALPRD) × 5, if QUALPRD ≠ 0

Sampling window width = (SYSCLK cycle) × 5, if QUALPRD = 0

Figure 5-14 shows the general-purpose input timing.

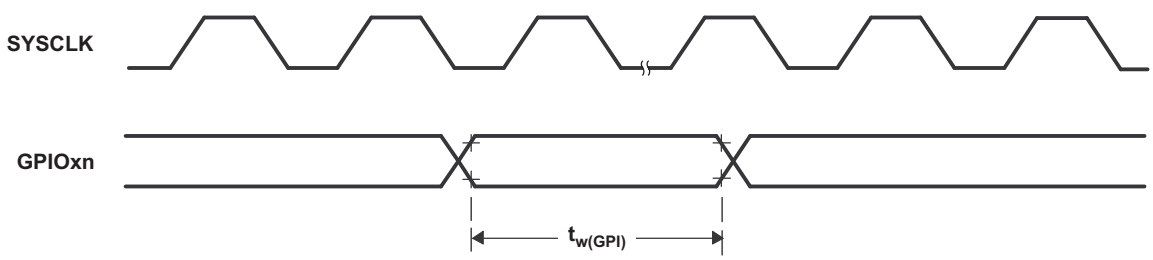

Figure 5-14. General-Purpose Input Timing

版权 © 2014–2020, Texas Instruments Incorporated

5.9.7 Interrupts

图 5-15 provides a high-level view of the interrupt architecture.

As shown in 图 5-15, the devices support five external interrupts (XINT1 to XINT5) that can be mapped onto any of the GPIO pins.

In this device, 16 ePIE block interrupts are grouped into 1 CPU interrupt. In total, there are 12 CPU interrupt groups, with 16 interrupts per group.

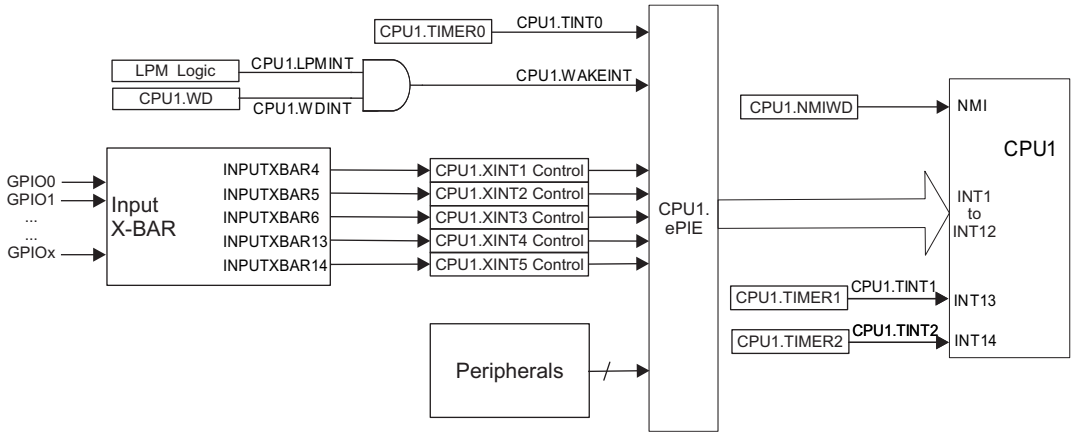

图 5-15. External and ePIE Interrupt Sources

5.9.7.1 External Interrupt (XINT) Electrical Data and Timing

Table 5-25 lists the external interrupt timing requirements. Table 5-26 lists the external interrupt switching characteristics. Figure 5-16 shows the external interrupt timing.

Table 5-25. External Interrupt Timing Requirements(1)

			MIN	MAX	UNIT
$t_{w(INT)}$	Pulse duration, INT input low/high	Synchronous	$2t_{c(SYSCLK)}$		cycles
		With qualifier	$t_{w(IQSW)} + t_{w(SP)} + 1t_{c(SYSCLK)}$		cycles

(1) For an explanation of the input qualifier parameters, see Table 5-24.

Table 5-26. External Interrupt Switching Characteristics(1)

over recommended operating conditions (unless otherwise noted)

PARAMETER		MIN	MAX	UNIT
$t_{d(INT)}$	Delay time, INT low/high to interrupt-vector fetch(2)	$t_{w(IQSW)} + 14t_{c(SYSCLK)}$	$t_{w(IQSW)} + t_{w(SP)} + 14t_{c(SYSCLK)}$	cycles

(1) For an explanation of the input qualifier parameters, see Table 5-24.
(2) This assumes that the ISR is in a single-cycle memory.

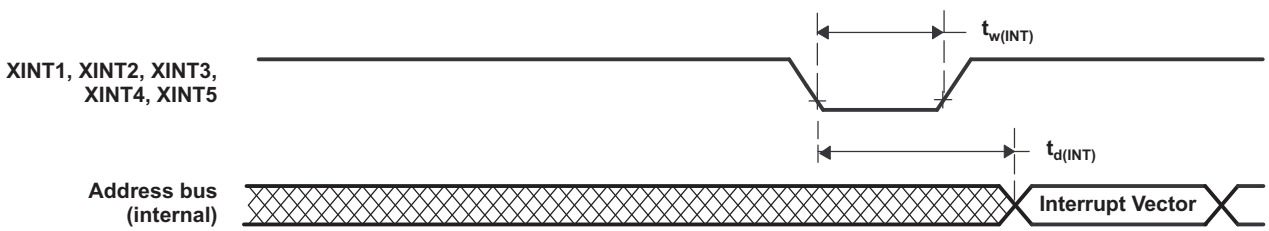

Figure 5-16. External Interrupt Timing

版权 © 2014–2020, Texas Instruments Incorporated

5.9.8 Low-Power Modes

This device has three clock-gating low-power modes and a special power-gating mode.

Further details, as well as the entry and exit procedure, for all of the low-power modes can be found in the Low Power Modes section of the *TMS320F2837xS Microcontrollers Technical Reference Manual*.

5.9.8.1 Clock-Gating Low-Power Modes

IDLE, STANDBY, and HALT modes on this device are similar to those on other C28x devices. 表 5-27 describes the effect on the system when any of the clock-gating low-power modes are entered.

表 5-27. Effect of Clock-Gating Low-Power Modes on the Device

MODULES/ CLOCK DOMAIN	CPU1 IDLE	CPU1 STANDBY	HALT
CPU1.CLKIN	Active	Gated	Gated
CPU1.SYSCLK	Active	Gated	Gated
CPU1.CPUCLK	Gated	Gated	Gated
Clock to modules Connected to PERx.SYSCLK	Active	Gated	Gated
CPU1.WDCLK	Active	Active	Gated if CLKSRCCTL1.WDHALTI = 0
AUXPLLCLK	Active	Active	Gated
PLL	Powered	Powered	Software must power down PLL before entering HALT
INTOSC1	Powered	Powered	Powered down if CLKSRCCTL1.WDHALTI = 0
INTOSC2	Powered	Powered	Powered down if CLKSRCCTL1.WDHALTI = 0
Flash	Powered	Powered	Software-Controlled
X1/X2 Crystal Oscillator	Powered	Powered	Powered-Down

5.9.8.2 Power-Gating Low-Power Modes

HIBERNATE mode is the lowest power mode on this device. It is a global low-power mode that gates the supply voltages to most of the system. HIBERNATE is essentially a controlled power-down with remote wakeup capability, and can be used to save power during long periods of inactivity. 表 5-28 describes the effects on the system when the HIBERNATE mode is entered.

表 5-28. Effect of Power-Gating Low-Power Mode on the Device

MODULES/POWER DOMAINS	HIBERNATE
M0 and M1 memories	• Remain on with memory retention if LPMCR.M0M1MODE = 0x00 • Are off when LPMCR.M0M1MODE = 0x01
CPU1 digital peripherals	Powered down
Dx, LSx, GSx memories	Power down, memory contents are lost
I/Os	On with output state preserved
Oscillators, PLL, analog peripherals, Flash	Enters Low-Power Mode

5.9.8.3 Low-Power Mode Wakeup Timing

表 5-29 shows the IDLE mode timing requirements, 表 5-30 shows the switching characteristics, and 图 5-17 shows the timing diagram for IDLE mode.

表 5-29. IDLE Mode Timing Requirements(1)

			MIN	MAX	UNIT
$t_{w(WAKE)}$	Pulse duration, external wake-up signal	Without input qualifier	$2t_{c(SYSCLK)}$		cycles
		With input qualifier	$2t_{c(SYSCLK)} + t_{w(IQSW)}$		

(1) For an explanation of the input qualifier parameters, see Table 5-24.

表 5-30. IDLE Mode Switching Characteristics(1)

over recommended operating conditions (unless otherwise noted)

PARAMETER		TEST CONDITIONS	MIN	MAX	UNIT
$t_{d(WAKE-IDLE)}$	Delay time, external wake signal to program execution resume (2)				cycles
	• Wakeup from Flash – Flash module in active state	Without input qualifier	$40t_{c(SYSCLK)}$		
		With input qualifier	$40t_{c(SYSCLK)} + t_{w(WAKE)}$		
	• Wakeup from Flash – Flash module in sleep state	Without input qualifier	$6700t_{c(SYSCLK)}$ (3)		
		With input qualifier	$6700t_{c(SYSCLK)}$ (3) $+ t_{w(WAKE)}$		
	• Wakeup from RAM	Without input qualifier	$25t_{c(SYSCLK)}$		
		With input qualifier	$25t_{c(SYSCLK)} + t_{w(WAKE)}$		

(1) For an explanation of the input qualifier parameters, see Table 5-24.
(2) This is the time taken to begin execution of the instruction that immediately follows the IDLE instruction. Execution of an ISR (triggered by the wake-up signal) involves additional latency.
(3) This value is based on the flash power-up time, which is a function of the SYSCLK frequency, flash wait states (RWAIT), and FPAC1[PSLEEP]. For more information, see the Flash and OTP Power-Down Modes and Wakeup section of the *TMS320F2837xS Microcontrollers Technical Reference Manual*. This value can be realized when SYSCLK is 200 MHz, RWAIT is 3, and FPAC1[PSLEEP] is 0x860.

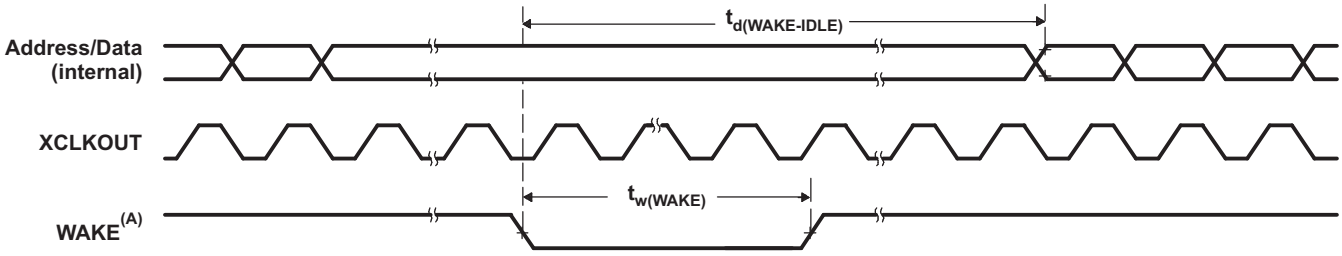

A. WAKE can be any enabled interrupt, $\overline{WDINT}$ or $\overline{XRS}$. After the IDLE instruction is executed, a delay of five OSCCLK cycles (minimum) is needed before the wake-up signal could be asserted.

图 5-17. IDLE Entry and Exit Timing Diagram

版权 © 2014–2020, Texas Instruments Incorporated

表 5-31 shows the STANDBY mode timing requirements, 表 5-32 shows the switching characteristics, and 图 5-18 shows the timing diagram for STANDBY mode.

表 5-31. STANDBY Mode Timing Requirements

			MIN	MAX	UNIT
$t_{w(WAKE-INT)}$	Pulse duration, external wake-up signal	QUALSTDBY = 0 | $2t_{c(OSCCLK)}$	$3t_{c(OSCCLK)}$		cycles
		QUALSTDBY > 0 | (2 + QUALSTDBY)$t_{c(OSCCLK)}$ (1)	(2 + QUALSTDBY) * $t_{c(OSCCLK)}$		

(1) QUALSTDBY is a 6-bit field in the LPMCR register.

表 5-32. STANDBY Mode Switching Characteristics

over recommended operating conditions (unless otherwise noted)

PARAMETER		TEST CONDITIONS	MIN	MAX	UNIT
$t_{d(IDLE-XCOS)}$	Delay time, IDLE instruction executed to XCLKOUT stop			$16t_{c(INTOSC1)}$	cycles
$t_{d(WAKE-STBY)}$	Delay time, external wake signal to program execution resume (1)				cycles
	• Wakeup from flash – Flash module in active state			$175t_{c(SYSCLK)} + t_{w(WAKE-INT)}$	
	• Wakeup from flash – Flash module in sleep state			$6700t_{c(SYSCLK)}$ (2) $+ t_{w(WAKE-INT)}$	
	• Wakeup from RAM			$3t_{c(OSC)} + 15t_{c(SYSCLK)} + t_{w(WAKE-INT)}$	

(1) This is the time taken to begin execution of the instruction that immediately follows the IDLE instruction. Execution of an ISR (triggered by the wake-up signal) involves additional latency.
(2) This value is based on the flash power-up time, which is a function of the SYSCLK frequency, flash wait states (RWAIT), and FPAC1[PSLEEP]. For more information, see the Flash and OTP Power-Down Modes and Wakeup section of the *TMS320F2837xS Microcontrollers Technical Reference Manual*. This value can be realized when SYSCLK is 200 MHz, RWAIT is 3, and FPAC1[PSLEEP] is 0x860.

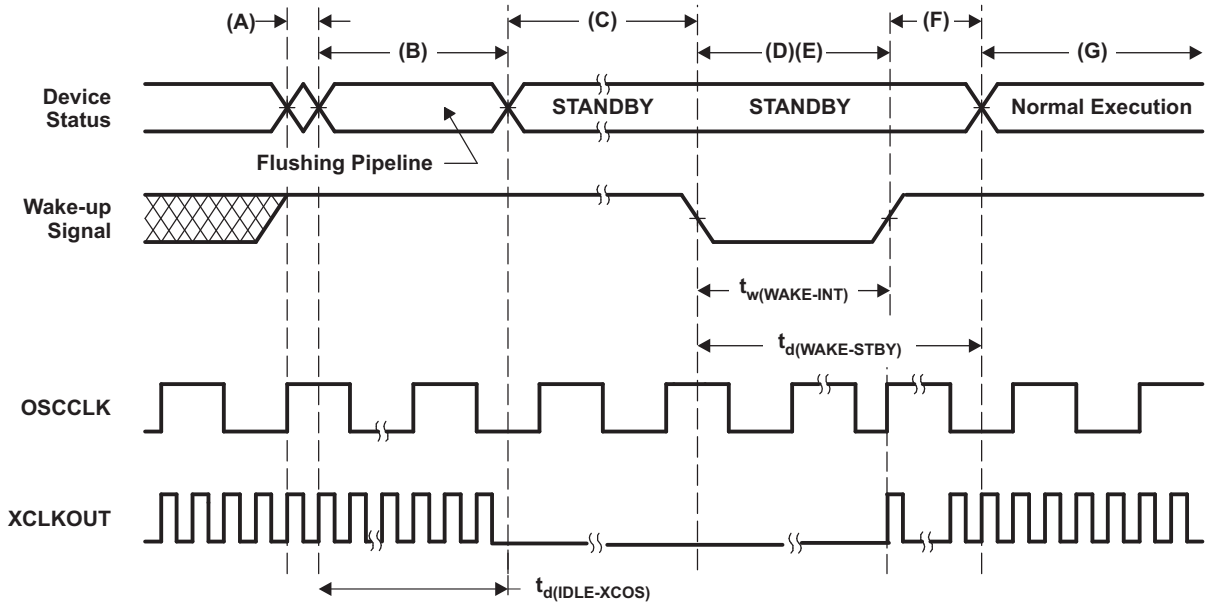

A. IDLE instruction is executed to put the device into STANDBY mode.
B. The LPM block responds to the STANDBY signal, SYSCLK is held for a maximum 16 INTOSC1 clock cycles before being turned off. This delay enables the CPU pipeline and any other pending operations to flush properly.
C. Clock to the peripherals are turned off. However, the PLL and watchdog are not shut down. The device is now in STANDBY mode. After the IDLE instruction is executed, a delay of five OSCCLK cycles (minimum) is needed before the wake-up signal could be asserted.
D. The external wake-up signal is driven active.
E. The wake-up signal fed to a GPIO pin to wake up the device must meet the minimum pulse width requirement. Furthermore, this signal must be free of glitches. If a noisy signal is fed to a GPIO pin, the wakeup behavior of the device will not be deterministic and the device may not exit low-power mode for subsequent wakeup pulses.
F. After a latency period, the STANDBY mode is exited.
G. Normal execution resumes. The device will respond to the interrupt (if enabled).

图 5-18. STANDBY Entry and Exit Timing Diagram

版权 © 2014–2020, Texas Instruments Incorporated

表 5-33 shows the HALT mode timing requirements, 表 5-34 shows the switching characteristics, and 图 5-19 shows the timing diagram for HALT mode.

表 5-33. HALT Mode Timing Requirements

		MIN	MAX	UNIT
$t_{w(WAKE\text{-}GPIO)}$	Pulse duration, GPIO wake-up signal(1)	$t_{oscst} + 2t_{c(OSCCLK)}$		cycles
$t_{w(WAKE\text{-}XRS)}$	Pulse duration, $\overline{XRS}$ wake-up signal(1)	$t_{oscst} + 8t_{c(OSCCLK)}$		cycles

(1) For applications using X1/X2 for OSCCLK, the user must characterize their specific oscillator start-up time as it is dependent on circuit/layout external to the device. See 表 5-17 for more information. For applications using INTOSC1 or INTOSC2 for OSCCLK, see 节 5.9.3.5 for t_{oscst}. Oscillator start-up time does not apply to applications using a single-ended crystal on the X1 pin, as it is powered externally to the device.

表 5-34. HALT Mode Switching Characteristics

over recommended operating conditions (unless otherwise noted)

PARAMETER		MIN	MAX	UNIT
$t_{d(IDLE\text{-}XCOS)}$	Delay time, IDLE instruction executed to XCLKOUT stop		$16t_{c(INTOSC1)}$	cycles
$t_{d(WAKE\text{-}HALT)}$	Delay time, external wake signal end to CPU1 program execution resume			cycles
	• Wakeup from flash – Flash module in active state		$75t_{c(OSCCLK)}$	
	• Wakeup from flash – Flash module in sleep state		$17500t_{c(OSCCLK)}$ (1)	
	• Wakeup from RAM		$75t_{c(OSCCLK)}$	

(1) This value is based on the flash power-up time, which is a function of the SYSCLK frequency, flash wait states (RWAIT), and FPAC1[PSLEEP]. For more information, see the Flash and OTP Power-Down Modes and Wakeup section of the *TMS320F2837xS Microcontrollers Technical Reference Manual*. This value can be realized when SYSCLK is 200 MHz, RWAIT is 3, and FPAC1[PSLEEP] is 0x860.

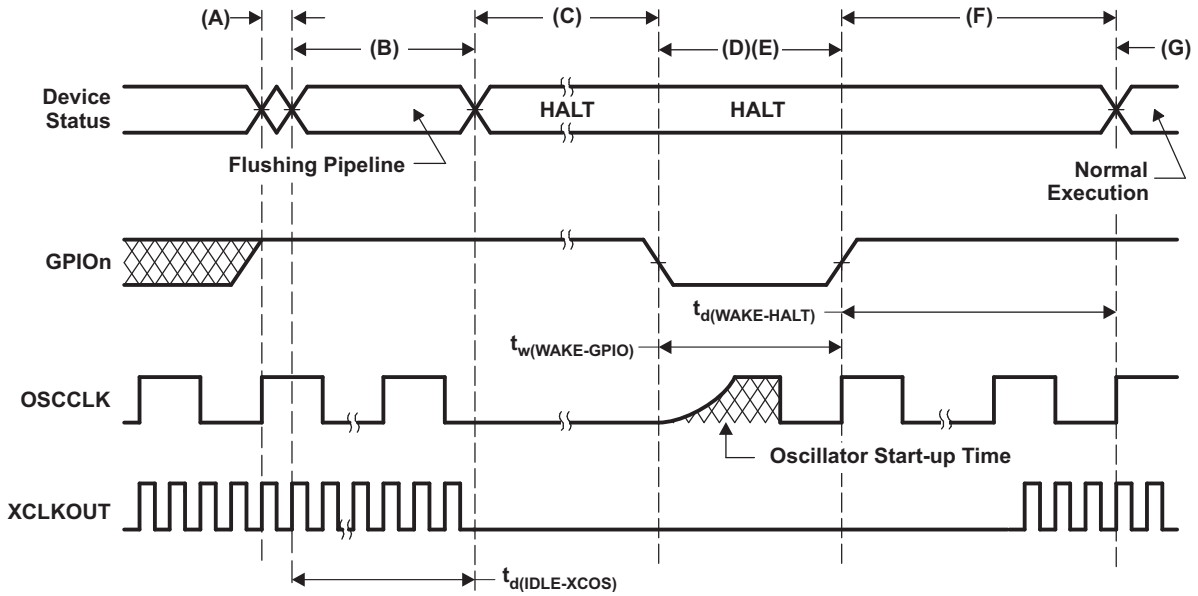

A. IDLE instruction is executed to put the device into HALT mode.

B. The LPM block responds to the HALT signal, SYSCLK is held for a maximum 16 INTOSC1 clock cycles before being turned off. This delay enables the CPU pipeline and any other pending operations to flush properly.

C. Clocks to the peripherals are turned off and the PLL is shut down. If a quartz crystal or ceramic resonator is used as the clock source, the internal oscillator is shut down as well. The device is now in HALT mode and consumes very little power. It is possible to keep the zero-pin internal oscillators (INTOSC1 and INTOSC2) and the watchdog alive in HALT MODE. This is done by writing a 1 to CLKSRCCTL1.WDHALTI. After the IDLE instruction is executed, a delay of five OSCCLK cycles (minimum) is needed before the wake-up signal could be asserted.

D. When the GPIOn pin (used to bring the device out of HALT) is driven low, the oscillator is turned on and the oscillator wakeup sequence is initiated. The GPIO pin should be driven high only after the oscillator has stabilized. This enables the provision of a clean clock signal during the PLL lock sequence. Because the falling edge of the GPIO pin asynchronously begins the wakeup procedure, care should be taken to maintain a low noise environment prior to entering and during HALT mode.

E. The wake-up signal fed to a GPIO pin to wake up the device must meet the minimum pulse width requirement. Furthermore, this signal must be free of glitches. If a noisy signal is fed to a GPIO pin, the wakeup behavior of the device will not be deterministic and the device may not exit low-power mode for subsequent wakeup pulses.

F. When CLKIN to the core is enabled, the device will respond to the interrupt (if enabled), after some latency. The HALT mode is now exited.

G. Normal operation resumes.

H. The user must relock the PLL upon HALT wakeup to ensure a stable PLL lock.

图 5-19. HALT Entry and Exit Timing Diagram

版权 © 2014–2020, Texas Instruments Incorporated

表 5-35 shows the HIBERNATE mode timing requirements, 表 5-36 shows the switching characteristics, and 图 5-20 shows the timing diagram for HIBERNATE mode.

表 5-35. HIBERNATE Mode Timing Requirements

		MIN	MAX	UNIT
$t_{w(HIBWAKE)}$	Pulse duration, $\overline{HIBWAKE}$ signal	40		µs
$t_{w(WAKEXRS)}$	Pulse duration, $\overline{XRS}$ wake-up signal	40		µs

表 5-36. HIBERNATE Mode Switching Characteristics

over recommended operating conditions (unless otherwise noted)

PARAMETER		MIN	MAX	UNIT
$t_{d(IDLE-XCOS)}$	Delay time, IDLE instruction executed to XCLKOUT stop		$30t_{c(SYSCLK)}$	cycles
$t_{d(WAKE-HIB)}$	Delay time, external wake signal to IORestore function start		1.5	ms

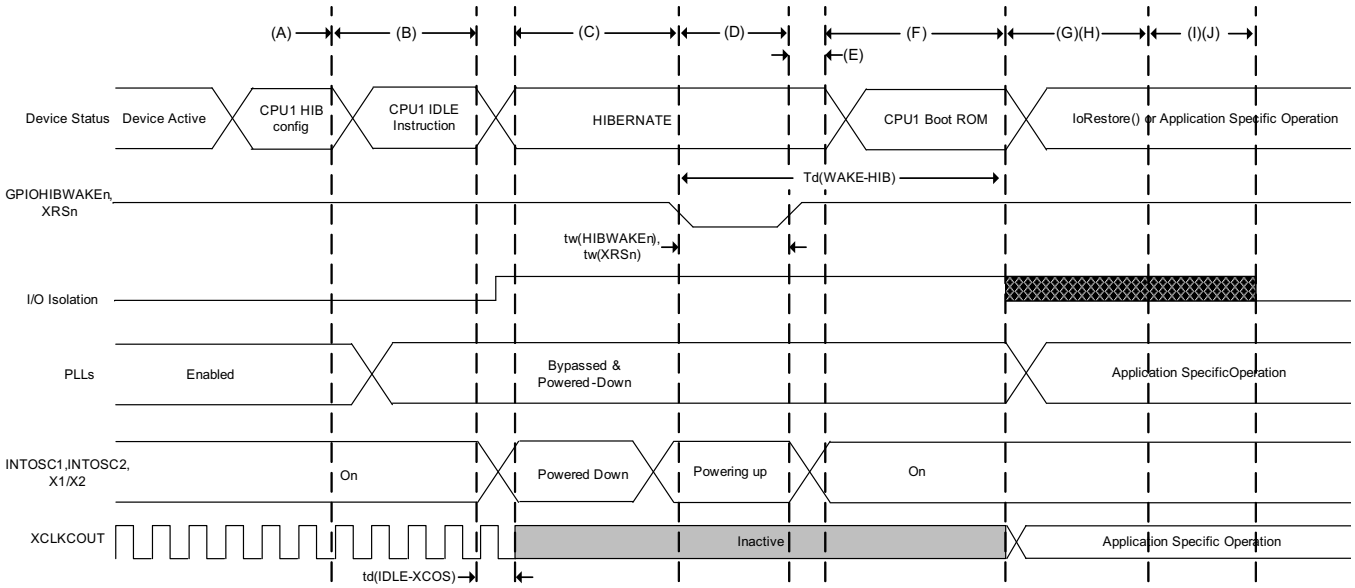

A. CPU1 does necessary application-specific context save to M0/M1 memories if required. This includes GPIO state if using I/O Isolation. Configures the LPMCR register of CPU1 for HIBERNATE mode. Powers down Flash Pump/Bank, USB-PHY, CMPSS, DAC, and ADC using their register configurations. The application should also power down the PLL and peripheral clocks before entering HIBERNATE.

B. IDLE instruction is executed to put the device into HIBERNATE mode.

C. The device is now in HIBERNATE mode. If configured, I/O isolation is turned on, M0 and M1 memories are retained. CPU1 is powered down. Digital peripherals are powered down. The oscillators, PLLs, analog peripherals, and Flash are in their software-controlled Low-Power modes. Dx, LSx, and GSx memories are also powered down, and their memory contents lost.

D. A falling edge on the GPIOHIBWAKEn pin will drive the wakeup of the devices clock sources INTOSC1, INTOSC2, and X1/X2 OSC. The wakeup source must keep the GPIOHIBWAKEn pin low long enough to ensure full power-up of these clock sources.

E. After the clock sources are powered up, the GPIOHIBWAKEn must be driven high to trigger the wakeup sequence of the remainder of the device.

F. The BootROM will then begin to execute. The BootROM can distinguish a HIBERNATE wakeup by reading the CPU1.REC.HIBRESETn bit. After the TI OTP trims are loaded, the BootROM code will branch to the user-defined IoRestore function if it has been configured.

G. At this point, the device is out of HIBERNATE mode, and the application may continue.

H. The IoRestore function is a user-defined function where the application may reconfigure GPIO states, disable I/O isolation, reconfigure the PLL, restore peripheral configurations, or branch to application code. This is up to the application requirements.

I. If the application has not branched to application code, the BootROM will continue after completing IoRestore. It will disable I/O isolation automatically if it was not taken care of inside of IoRestore.

J. BootROM will then boot as determined by the HIBBOOTMODE register. Refer to the ROM Code and Peripheral Booting chapter of the *TMS320F2837xS Microcontrollers Technical Reference Manual* for more information.

图 5-20. HIBERNATE Entry and Exit Timing Diagram

注

1. If the IORESTOREADDR is configured as the default value, the BootROM will continue its execution to boot as determined by the HIBBOOTMODE register. Refer to the ROM Code and Peripheral Booting chapter of the *TMS320F2837xS Microcontrollers Technical Reference Manual* for more information.
2. The user may choose to disable I/O Isolation at any point in the IoRestore function. Regardless if the user has disabled Isolation in the IoRestore function or if IoRestore is not defined, the BootROM will automatically disable isolation before booting as determined by the HIBBOOTMODE register.

版权 © 2014–2020, Texas Instruments Incorporated

5.9.9 External Memory Interface (EMIF)

The EMIF provides a means of connecting the CPU to various external storage devices like asynchronous memories (SRAM, NOR flash) or synchronous memory (SDRAM).

5.9.9.1 Asynchronous Memory Support

The EMIF supports asynchronous memories:

- SRAMs
- NOR Flash memories

There is an external wait input that allows slower asynchronous memories to extend the memory access. The EMIF module supports up to three chip selects ($\overline{\text{EMIF_CS}}$[4:2]). Each chip select has the following individually programmable attributes:

- Data bus width
- Read cycle timings: setup, hold, strobe
- Write cycle timings: setup, hold, strobe
- Bus turnaround time
- Extended wait option with programmable time-out
- Select strobe option

5.9.9.2 Synchronous DRAM Support

The EMIF memory controller is compliant with the JESD21-C SDR SDRAMs that use a 32-bit or 16-bit data bus. The EMIF has a single SDRAM chip select ($\overline{\text{EMIF_CS}}$[0]).

The address space of the EMIF, for the synchronous memory (SDRAM), lies beyond the 22-bit range of the program address bus and can only be accessed through the data bus, which places a restriction on the C compiler being able to work effectively on data in this space. Therefore, when using SDRAM, the user is advised to copy data (using the DMA) from external memory to RAM before working on it. See the examples in C2000Ware (C2000Ware for C2000 MCUs) and the *TMS320F2837xS Microcontrollers Technical Reference Manual*.

SDRAM configurations supported are:

- One-bank, two-bank, and four-bank SDRAM devices
- Devices with 8-, 9-, 10-, and 11-column addresses
- CAS latency of two or three clock cycles
- 16-bit/32-bit data bus width
- 3.3-V LVCMOS interface

Additionally, the EMIF supports placing the SDRAM in self-refresh and power-down modes. Self-refresh mode allows the SDRAM to be put in a low-power state while still retaining memory contents because the SDRAM will continue to refresh itself even without clocks from the microcontroller. Power-down mode achieves even lower power, except the microcontroller must periodically wake up and issue refreshes if data retention is required. The EMIF module does not support mobile SDRAM devices.

On this device, the EMIF does not support burst access for SDRAM configurations. This means every access to an external SDRAM device will have CAS latency.

5.9.9.3 EMIF Electrical Data and Timing

5.9.9.3.1 Asynchronous RAM

Table 5-37 shows the EMIF asynchronous memory timing requirements. Table 5-38 shows the EMIF asynchronous memory switching characteristics. Figure 5-21 through Figure 5-24 show the EMIF asynchronous memory timing diagrams.

Table 5-37. EMIF Asynchronous Memory Timing Requirements(1)

NO.			MIN	MAX	UNIT
Reads and Writes					
	E	EMIF clock period	$t_{c(SYSCLK)}$		ns
2	$t_{w(EM_WAIT)}$	Pulse duration, EMxWAIT assertion and deassertion	2E		ns
Reads					
12	$t_{su(EMDV-EMOEH)}$	Setup time, EMxD[y:0] valid before $\overline{EMxOE}$ high	15		ns
13	$t_{h(EMOEH-EMDIV)}$	Hold time, EMxD[y:0] valid after $\overline{EMxOE}$ high	0		ns
14	$t_{su(EMOEL-EMWAIT)}$	Setup Time, EMxWAIT asserted before end of Strobe Phase(2)	4E+20		ns
Writes					
28	$t_{su(EMWEL-EMWAIT)}$	Setup Time, EMxWAIT asserted before end of Strobe Phase(2)	4E+20		ns

(1) E = EMxCLK period in ns.
(2) Setup before end of STROBE phase (if no extended wait states are inserted) by which EMxWAIT must be asserted to add extended wait states. Figure 5-22 and Figure 5-24 describe EMIF transactions that include extended wait states inserted during the STROBE phase. However, cycles inserted as part of this extended wait period should not be counted; the 4E requirement is to the start of where the HOLD phase would begin if there were no extended wait cycles.

Table 5-38. EMIF Asynchronous Memory Switching Characteristics(1)(2)(3)

NO.	PARAMETER		MIN	MAX	UNIT
Reads and Writes					
1	$t_{d(TURNAROUND)}$	Turn around time	(TA)*E–3	(TA)*E+2	ns
Reads					
3	$t_{c(EMRCYCLE)}$	EMIF read cycle time (EW = 0)	(RS+RST+RH)*E–3	(RS+RST+RH)*E+2	ns
		EMIF read cycle time (EW = 1)	(RS+RST+RH+ (EWC*16))*E–3	(RS+RST+RH+ (EWC*16))*E+2	ns
4	$t_{su(EMCEL-EMOEL)}$	Output setup time, $\overline{EMxCS[y:2]}$ low to $\overline{EMxOE}$ low (SS = 0)	(RS)*E–3	(RS)*E+2	ns
		Output setup time, $\overline{EMxCS[y:2]}$ low to $\overline{EMxOE}$ low (SS = 1)	–3	2	ns
5	$t_{h(EMOEH-EMCEH)}$	Output hold time, $\overline{EMxOE}$ high to $\overline{EMxCS[y:2]}$ high (SS = 0)	(RH)*E–3	(RH)*E	ns
		Output hold time, $\overline{EMxOE}$ high to $\overline{EMxCS[y:2]}$ high (SS = 1)	–3	0	ns
6	$t_{su(EMBAV-EMOEL)}$	Output setup time, EMxBA[y:0] valid to $\overline{EMxOE}$ low	(RS)*E–3	(RS)*E+2	ns
7	$t_{h(EMOEH-EMBAIV)}$	Output hold time, $\overline{EMxOE}$ high to EMxBA[y:0] invalid	(RH)*E–3	(RH)*E	ns
8	$t_{su(EMAV-EMOEL)}$	Output setup time, EMxA[y:0] valid to $\overline{EMxOE}$ low	(RS)*E–3	(RS)*E+2	ns

(1) TA = Turn around, RS = Read setup, RST = Read strobe, RH = Read hold, WS = Write setup, WST = Write strobe, WH = Write hold, MEWC = Maximum external wait cycles. These parameters are programmed through the Asynchronous Bank and Asynchronous Wait Cycle Configuration Registers. These support the following ranges of values: TA[4–1], RS[16–1], RST[64–4], RH[8–1], WS[16–1], WST[64–1], WH[8–1], and MEWC[1–256]. See the *TMS320F2837xS Microcontrollers Technical Reference Manual* for more information.
(2) E = EMxCLK period in ns.
(3) EWC = external wait cycles determined by EMxWAIT input signal. EWC supports the following range of values. EWC[256–1]. The maximum wait time before time-out is specified by bit field MEWC in the Asynchronous Wait Cycle Configuration Register. See the *TMS320F2837xS Microcontrollers Technical Reference Manual* for more information.

Copyright © 2014–2020, Texas Instruments Incorporated

Table 5-38. EMIF Asynchronous Memory Switching Characteristics[(1)(2)(3)] (continued)

NO.	PARAMETER		MIN	MAX	UNIT
9	$t_{h(EMOEH-EMAIV)}$	Output hold time, $\overline{EMxOE}$ high to EMxA[y:0] invalid	(RH)*E–3	(RH)*E	ns
10	$t_{w(EMOEL)}$	$\overline{EMxOE}$ active low width (EW = 0)	(RST)*E–1	(RST)*E+1	ns
		$\overline{EMxOE}$ active low width (EW = 1)	(RST+(EWC*16))*E–1	(RST+(EWC*16))*E+1	ns
11	$t_{d(EMWAITH-EMOEH)}$	Delay time from EMxWAIT deasserted to $\overline{EMxOE}$ high	4E+10	5E+15	ns
29	$t_{su(EMDQMV-EMOEL)}$	Output setup time, EMxDQM[y:0] valid to $\overline{EMxOE}$ low	(RS)*E–3	(RS)*E+2	ns
30	$t_{h(EMOEH-EMDQMIV)}$	Output hold time, $\overline{EMxOE}$ high to EMxDQM[y:0] invalid	(RH)*E–3	(RH)*E	ns
Writes					
15	$t_{c(EMWCYCLE)}$	EMIF write cycle time (EW = 0)	(WS+WST+WH)*E–3	(WS+WST+WH)*E+1	ns
		EMIF write cycle time (EW = 1)	(WS+WST+WH+ (EWC*16))*E–3	(WS+WST+WH+ (EWC*16))*E+1	ns
16	$t_{su(EMCEL-EMWEL)}$	Output setup time, $\overline{EMxCS[y:2]}$ low to $\overline{EMxWE}$ low (SS = 0)	(WS)*E–3	(WS)*E+1	ns
		Output setup time, $\overline{EMxCS[y:2]}$ low to $\overline{EMxWE}$ low (SS = 1)	–3	1	ns
17	$t_{h(EMWEH-EMCEH)}$	Output hold time, $\overline{EMxWE}$ high to $\overline{EMxCS[y:2]}$ high (SS = 0)	(WH)*E–3	(WH)*E	ns
		Output hold time, $\overline{EMxWE}$ high to $\overline{EMxCS[y:2]}$ high (SS = 1)	–3	0	ns
18	$t_{su(EMDQMV-EMWEL)}$	Output setup time, EMxDQM[y:0] valid to $\overline{EMxWE}$ low	(WS)*E–3	(WS)*E+1	ns
19	$t_{h(EMWEH-EMDQMIV)}$	Output hold time, $\overline{EMxWE}$ high to EMxDQM[y:0] invalid	(WH)*E–3	(WH)*E	ns
20	$t_{su(EMBAV-EMWEL)}$	Output setup time, EMxBA[y:0] valid to $\overline{EMxWE}$ low	(WS)*E–3	(WS)*E+1	ns
21	$t_{h(EMWEH-EMBAIV)}$	Output hold time, $\overline{EMxWE}$ high to EMxBA[y:0] invalid	(WH)*E–3	(WH)*E	ns
22	$t_{su(EMAV-EMWEL)}$	Output setup time, EMxA[y:0] valid to $\overline{EMxWE}$ low	(WS)*E–3	(WS)*E+1	ns
23	$t_{h(EMWEH-EMAIV)}$	Output hold time, $\overline{EMxWE}$ high to EMxA[y:0] invalid	(WH)*E–3	(WH)*E	ns
24	$t_{w(EMWEL)}$	$\overline{EMxWE}$ active low width (EW = 0)	(WST)*E–1	(WST)*E+1	ns
		$\overline{EMxWE}$ active low width (EW = 1)	(WST+(EWC*16))*E–1	(WST+(EWC*16))*E+1	ns
25	$t_{d(EMWAITH-EMWEH)}$	Delay time from EMxWAIT deasserted to $\overline{EMxWE}$ high	4E+10	5E+15	ns
26	$t_{su(EMDV-EMWEL)}$	Output setup time, EMxD[y:0] valid to $\overline{EMxWE}$ low	(WS)*E–3	(WS)*E+1	ns
27	$t_{h(EMWEH-EMDIV)}$	Output hold time, $\overline{EMxWE}$ high to EMxD[y:0] invalid	(WH)*E–3	(WH)*E	ns

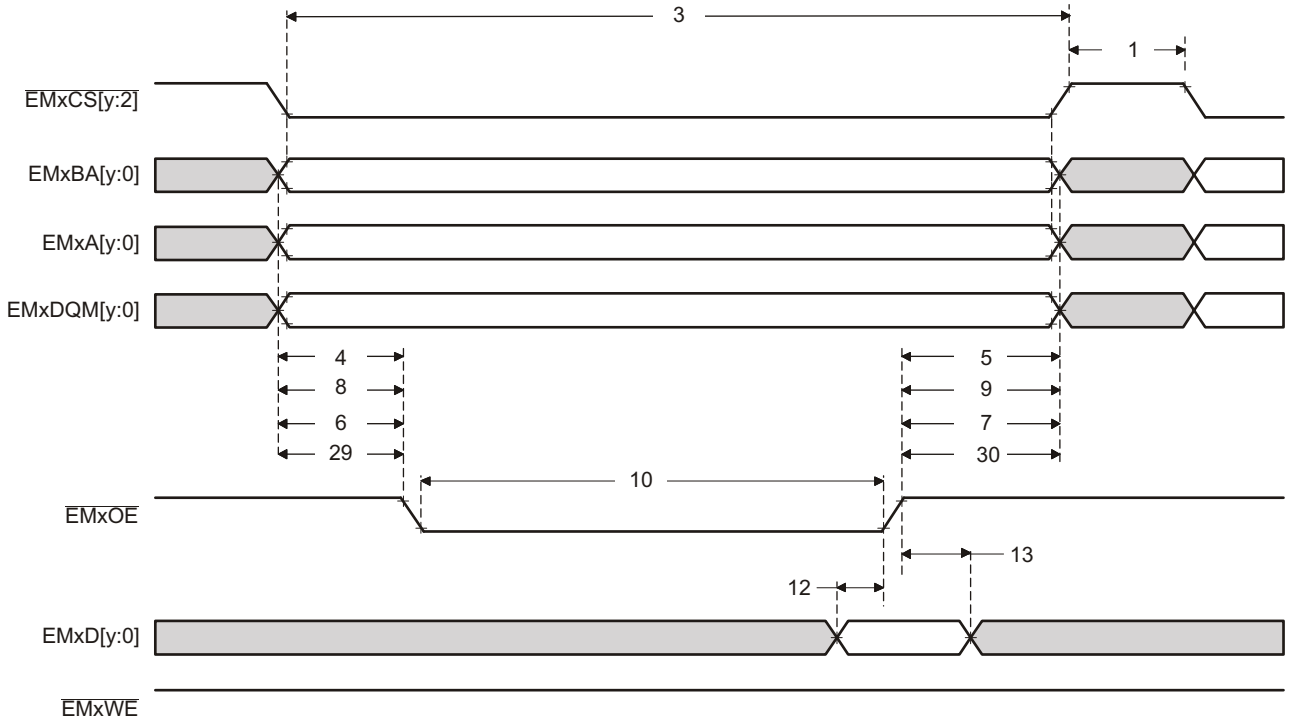

Figure 5-21. Asynchronous Memory Read Timing

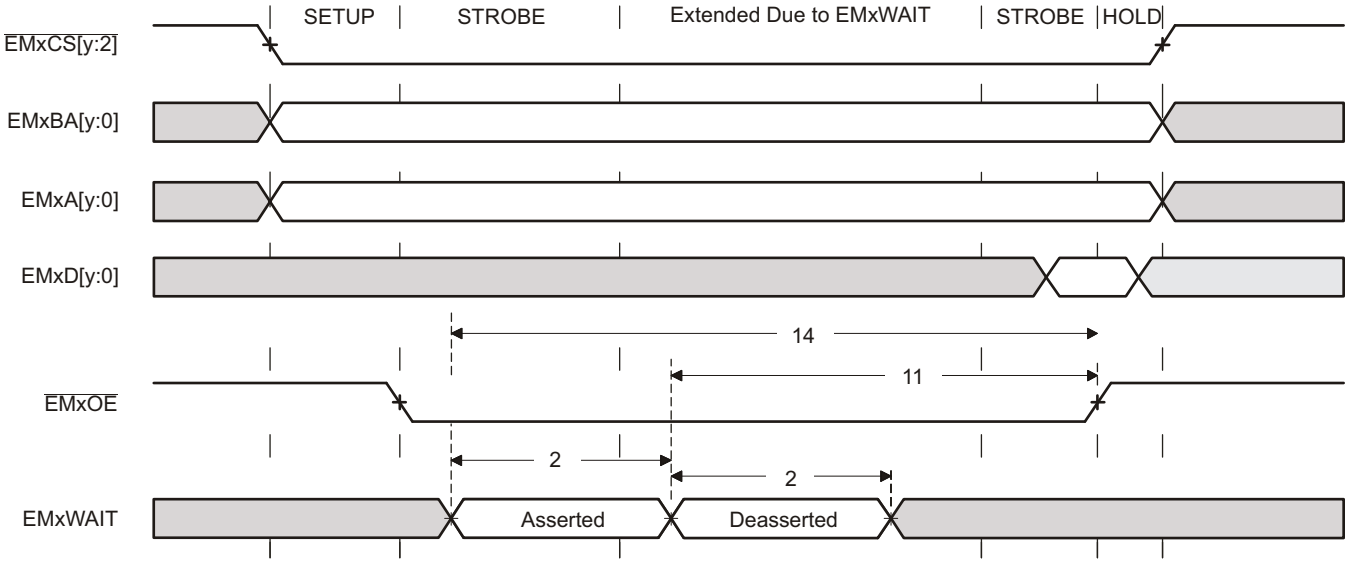

Figure 5-22. EMxWAIT Read Timing Requirements

Copyright © 2014–2020, Texas Instruments Incorporated

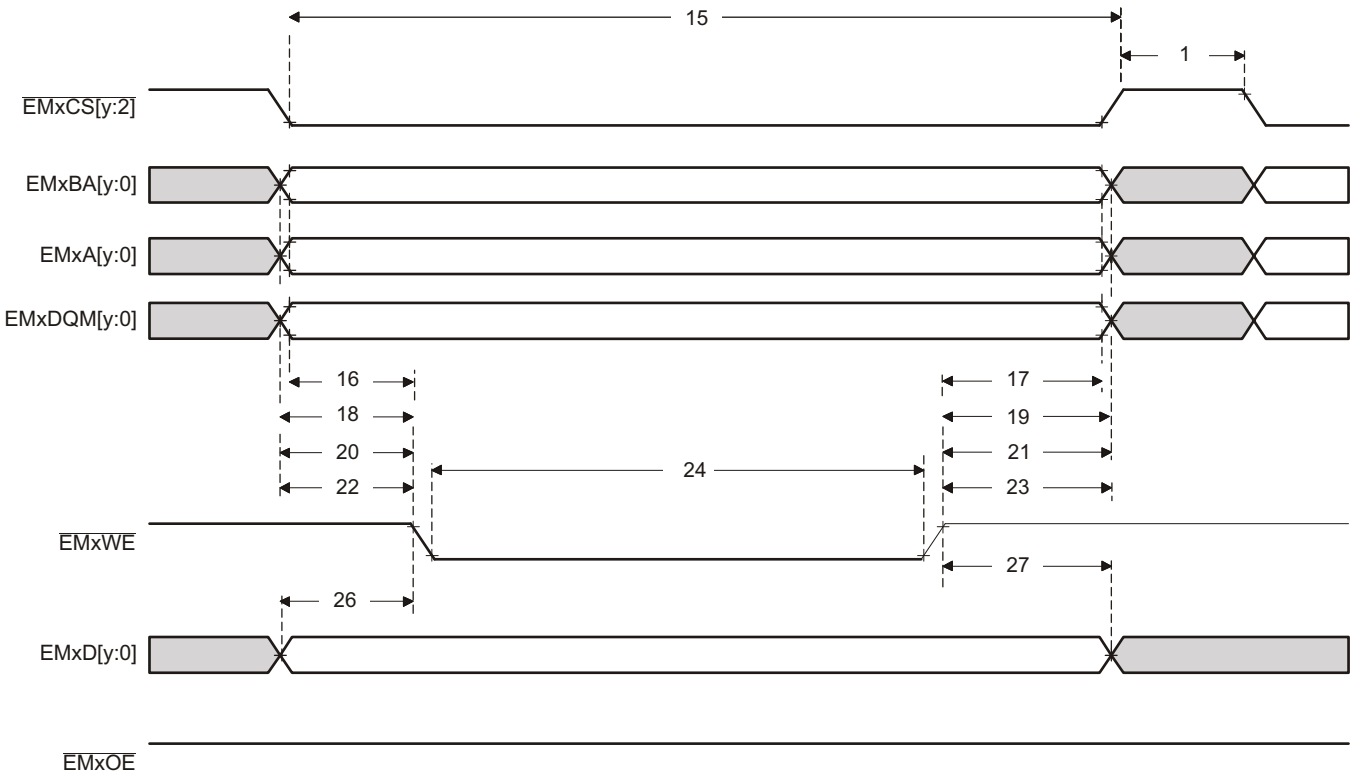

Figure 5-23. Asynchronous Memory Write Timing

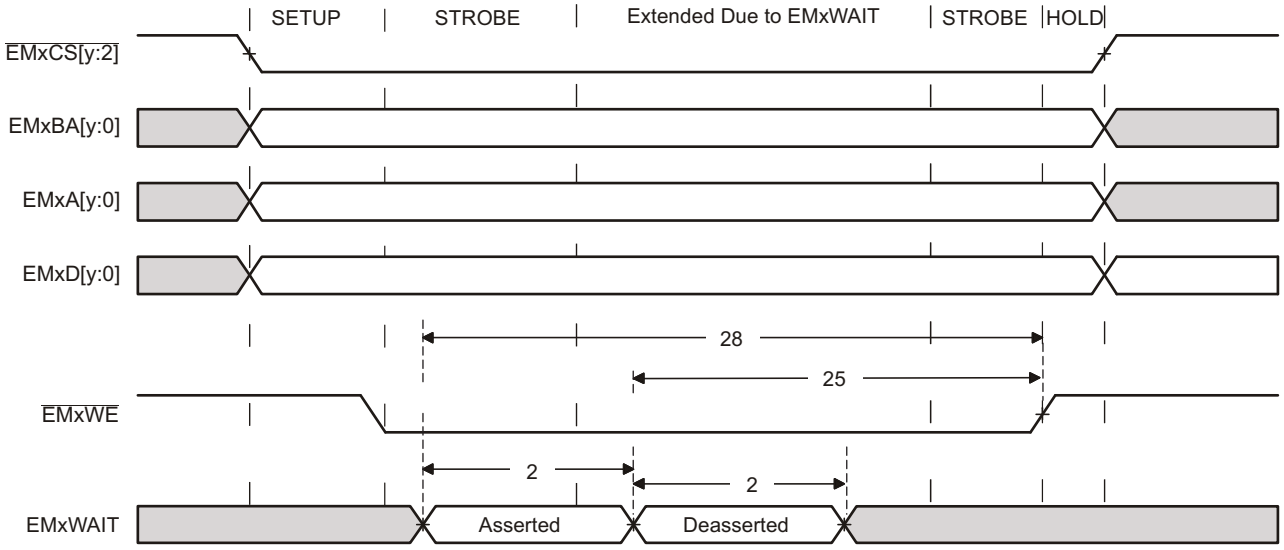

Figure 5-24. EMxWAIT Write Timing Requirements

5.9.9.3.2 Synchronous RAM

Table 5-39 shows the EMIF synchronous memory timing requirements. Table 5-40 shows the EMIF synchronous memory switching characteristics. Figure 5-25 and Figure 5-26 show the synchronous memory timing diagrams.

Table 5-39. EMIF Synchronous Memory Timing Requirements

NO.			MIN	MAX	UNIT
19	$t_{su(EMIFDV-EM_CLKH)}$	Input setup time, read data valid on EMxD[y:0] before EMxCLK rising	2		ns
20	$t_{h(CLKH-DIV)}$	Input hold time, read data valid on EMxD[y:0] after EMxCLK rising	1.5		ns

Table 5-40. EMIF Synchronous Memory Switching Characteristics

NO.	PARAMETER		MIN	MAX	UNIT
1	$t_{c(CLK)}$	Cycle time, EMIF clock EMxCLK	10		ns
2	$t_{w(CLK)}$	Pulse width, EMIF clock EMxCLK high or low	3		ns
3	$t_{d(CLKH-CSV)}$	Delay time, EMxCLK rising to $\overline{\text{EMxCS[y:2]}}$ valid		8	ns
4	$t_{oh(CLKH-CSIV)}$	Output hold time, EMxCLK rising to $\overline{\text{EMxCS[y:2]}}$ invalid	1		ns
5	$t_{d(CLKH-DQMV)}$	Delay time, EMxCLK rising to EMxDQM[y:0] valid		8	ns
6	$t_{oh(CLKH-DQMIV)}$	Output hold time, EMxCLK rising to EMxDQM[y:0] invalid	1		ns
7	$t_{d(CLKH-AV)}$	Delay time, EMxCLK rising to EMxA[y:0] and EMxBA[y:0] valid		8	ns
8	$t_{oh(CLKH-AIV)}$	Output hold time, EMxCLK rising to EMxA[y:0] and EMxBA[y:0] invalid	1		ns
9	$t_{d(CLKH-DV)}$	Delay time, EMxCLK rising to EMxD[y:0] valid		8	ns
10	$t_{oh(CLKH-DIV)}$	Output hold time, EMxCLK rising to EMxD[y:0] invalid	1		ns
11	$t_{d(CLKH-RASV)}$	Delay time, EMxCLK rising to EMxRAS valid		8	ns
12	$t_{oh(CLKH-RASIV)}$	Output hold time, EMxCLK rising to EMxRAS invalid	1		ns
13	$t_{d(CLKH-CASV)}$	Delay time, EMxCLK rising to EMxCAS valid		8	ns
14	$t_{oh(CLKH-CASIV)}$	Output hold time, EMxCLK rising to EMxCAS invalid	1		ns
15	$t_{d(CLKH-WEV)}$	Delay time, EMxCLK rising to $\overline{\text{EMxWE}}$ valid		8	ns
16	$t_{oh(CLKH-WEIV)}$	Output hold time, EMxCLK rising to $\overline{\text{EMxWE}}$ invalid	1		ns
17	$t_{d(CLKH-DHZ)}$	Delay time, EMxCLK rising to EMxD[y:0] tri-stated		8	ns
18	$t_{oh(CLKH-DLZ)}$	Output hold time, EMxCLK rising to EMxD[y:0] driving	1		ns

Copyright © 2014–2020, Texas Instruments Incorporated

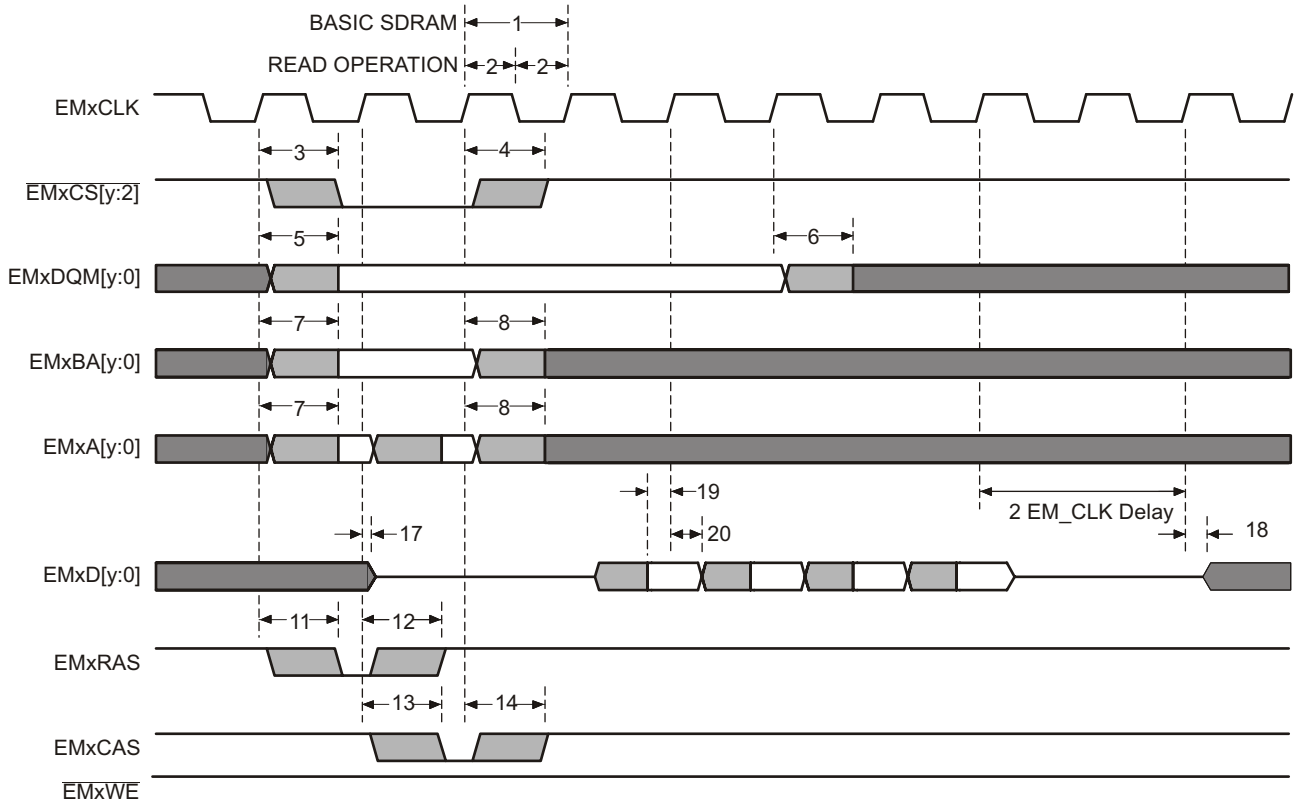

Figure 5-25. Basic SDRAM Read Operation

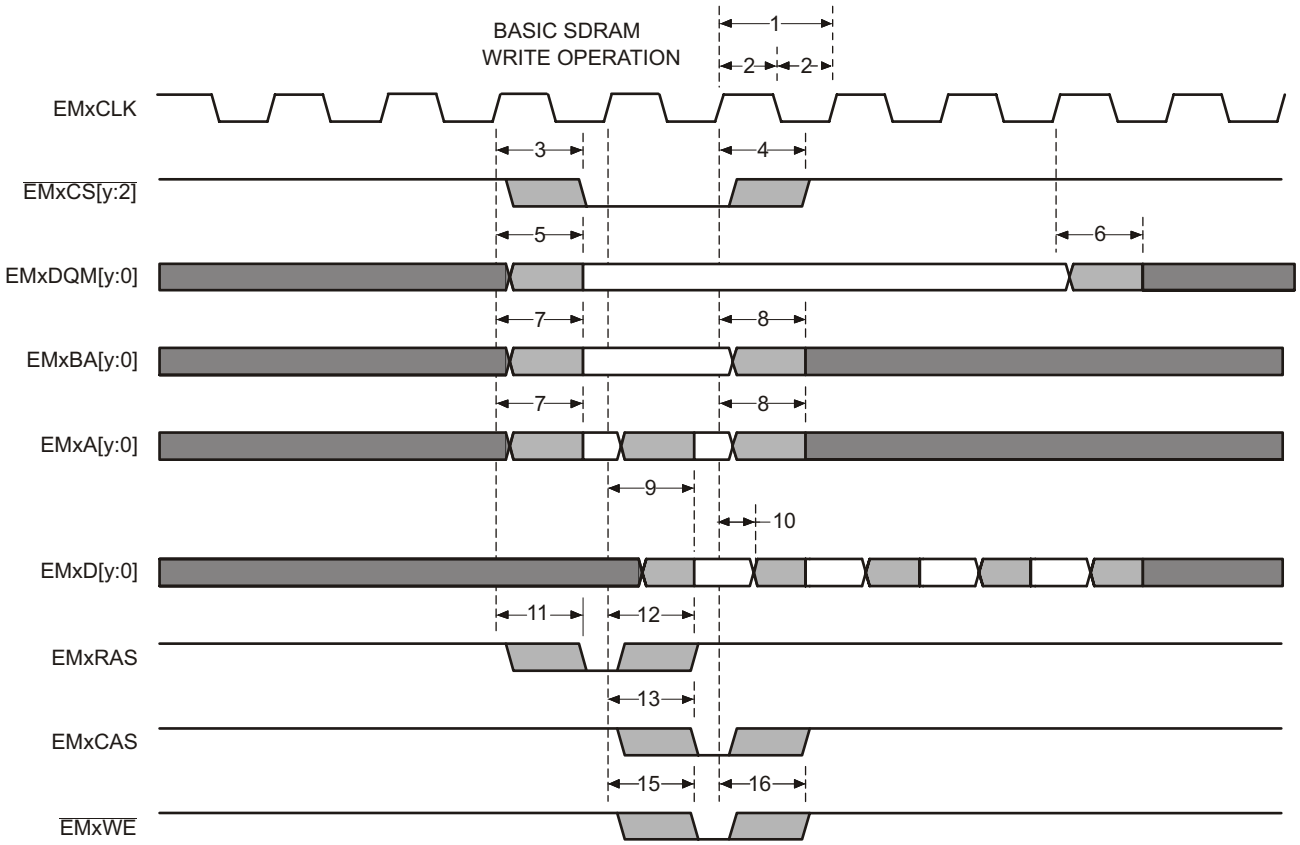

Figure 5-26. Basic SDRAM Write Operation

版权 © 2014–2020, Texas Instruments Incorporated

5.10 Analog Peripherals

The analog subsystem module is described in this section.

The analog modules on this device include the ADC, temperature sensor, buffered DAC, and CMPSS.

The analog subsystem has the following features:

- Flexible voltage references
  - The ADCs are referenced to V_{REFHIx} and V_{REFLOx} pins.
    - V_{REFHIx} pin voltage must be driven in externally.
- The buffered DACs are referenced to V_{REFHIx} and V_{SSA}.
  - Alternately, these DACs can be referenced to the VDAC pin and V_{SSA}.
- The comparator DACs are referenced to V_{DDA} and V_{SSA}.
  - Alternately, these DACs can be referenced to the VDAC pin and V_{SSA}.
- Flexible pin usage
  - Buffered DAC and comparator subsystem functions multiplexed with ADC inputs
- Internal connection to V_{REFLO} on all ADCs for offset self-calibration

图 5-27 shows the Analog Subsystem Block Diagram for the 337-ball ZWT package. 图 5-28 shows the Analog Subsystem Block Diagram for the 176-pin PTP package. 图 5-29 shows the Analog Subsystem Block Diagram for the 100-pin PZP package.

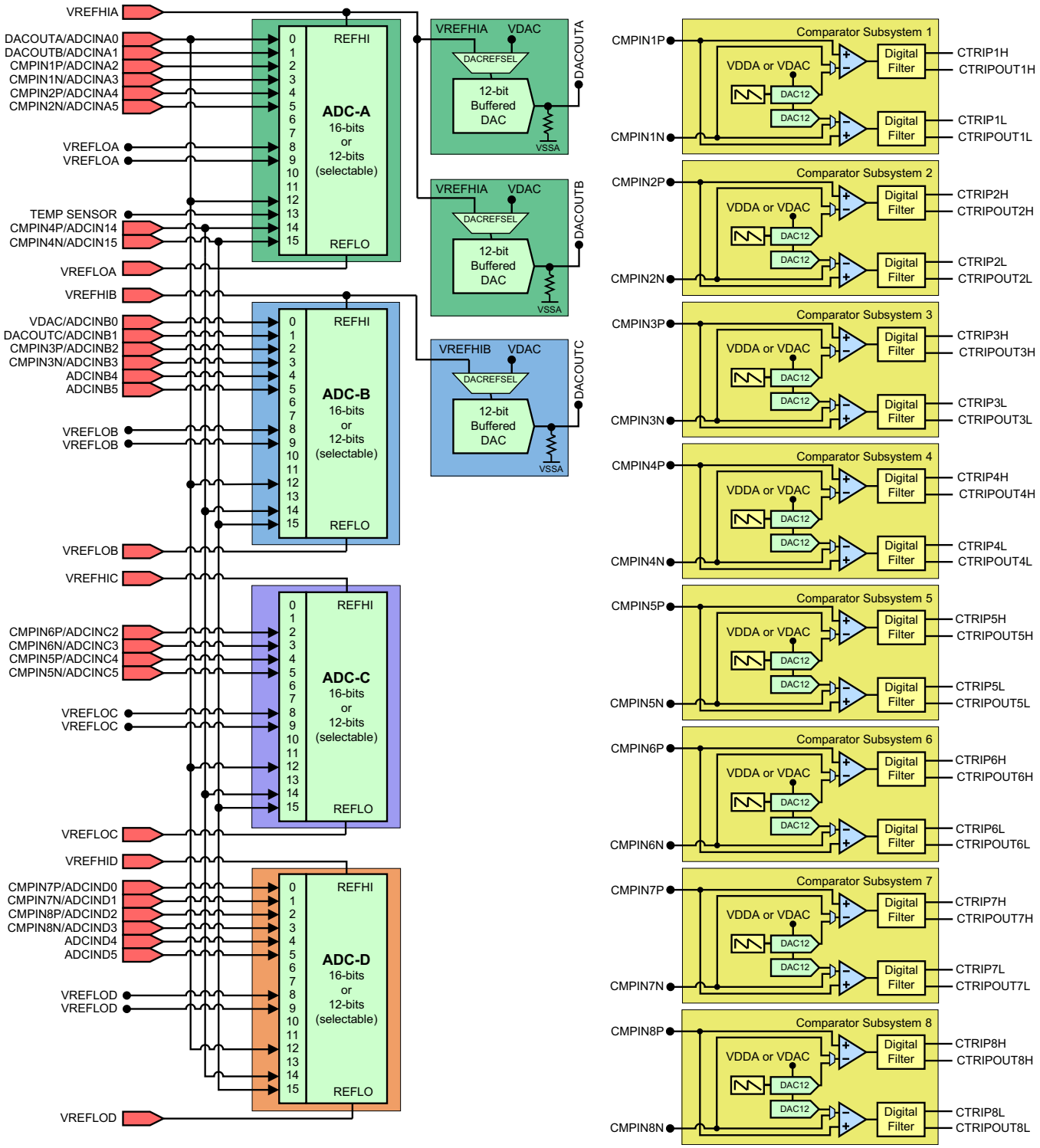

图 5-27. Analog Subsystem Block Diagram (337-Ball ZWT)

版权 © 2014–2020, Texas Instruments Incorporated

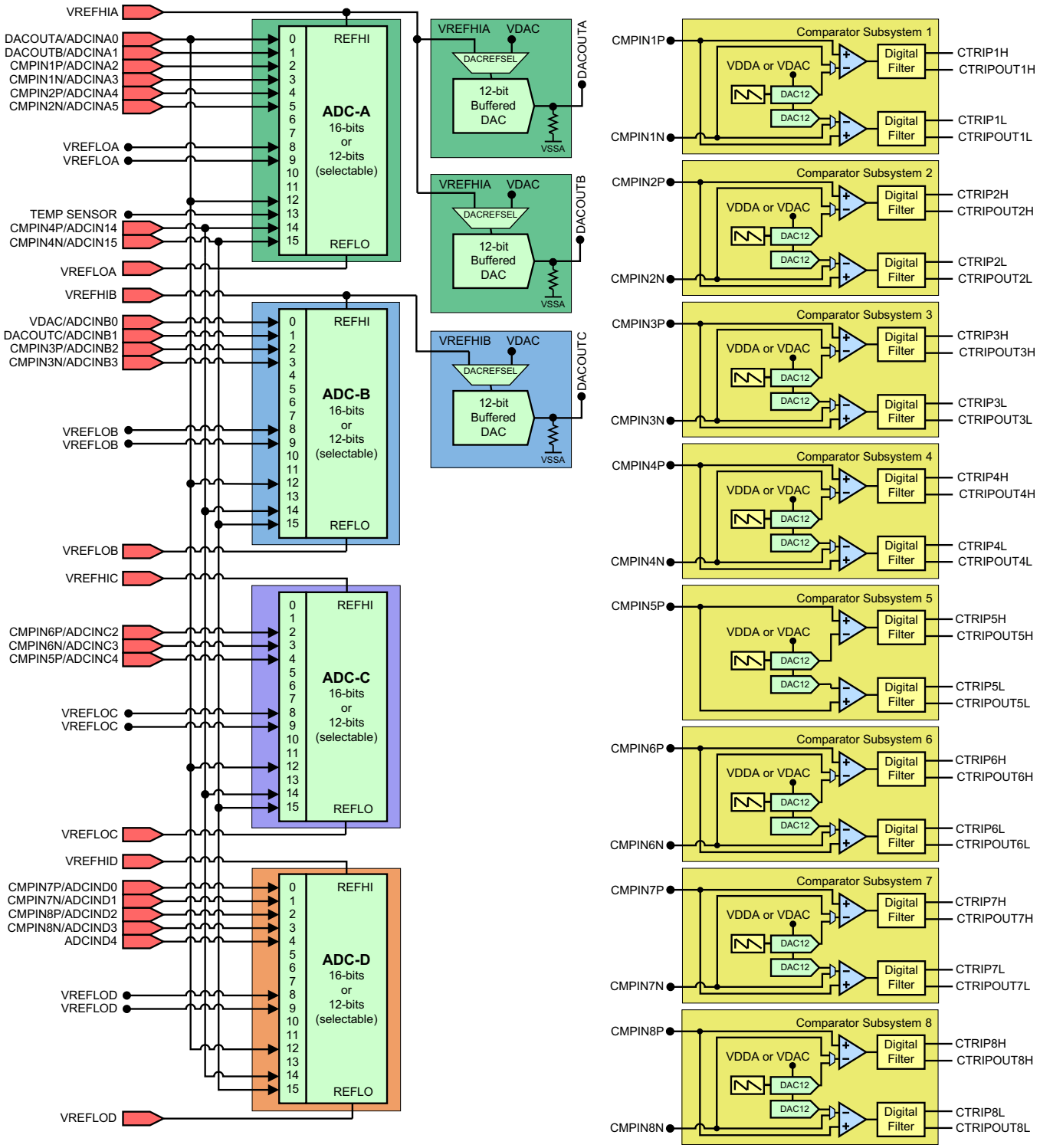

图 5-28. Analog Subsystem Block Diagram (176-Pin PTP)

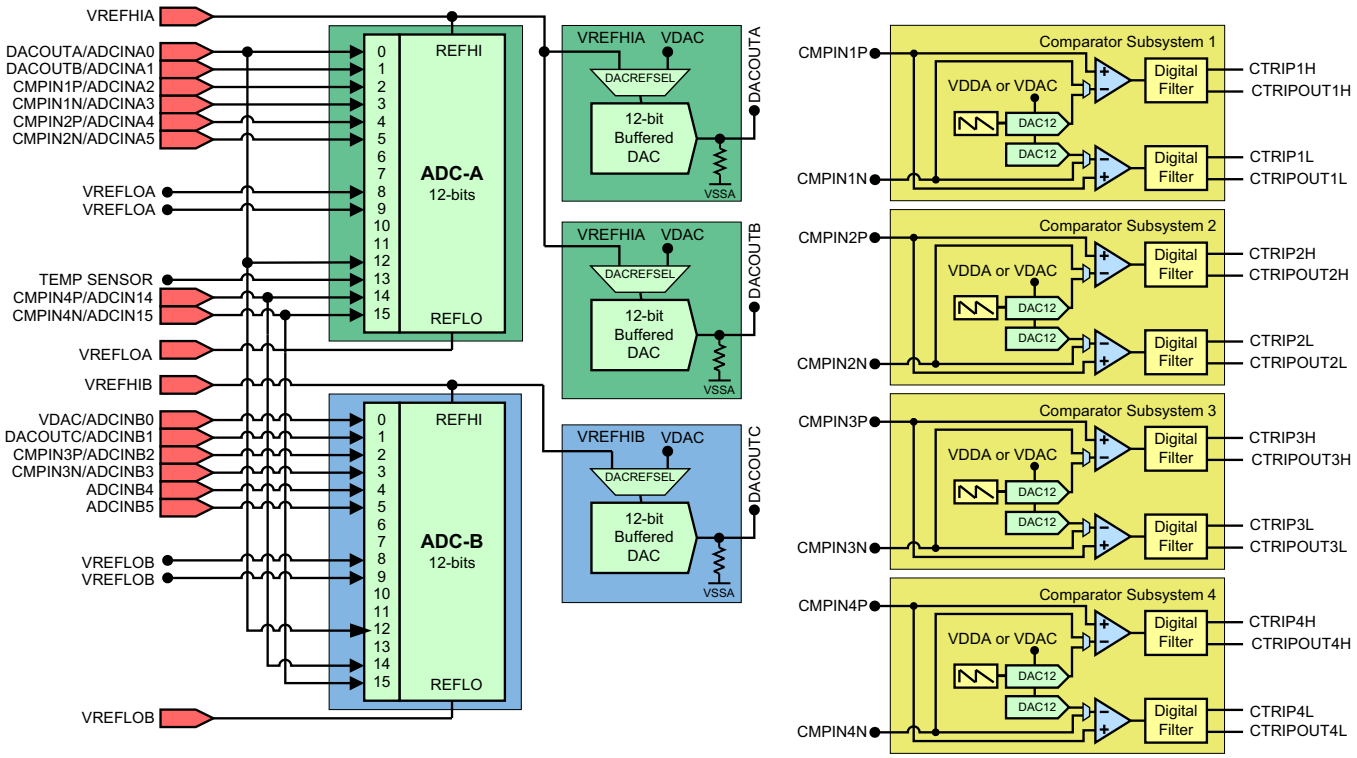

图 5-29. Analog Subsystem Block Diagram (100-Pin PZP)

版权 © 2014–2020, Texas Instruments Incorporated

5.10.1 Analog-to-Digital Converter (ADC)

The ADCs on this device are successive approximation (SAR) style ADCs with selectable resolution of either 16 bits or 12 bits. There are multiple ADC modules which allow simultaneous sampling. The ADC wrapper is start-of-conversion (SOC) based [see the SOC Principle of Operation section of the *TMS320F2837xS Microcontrollers Technical Reference Manual*.

Each ADC has the following features:

- Selectable resolution of 16 bits or 12 bits
- Ratiometric external reference set by V_{REFHI} and V_{REFLO}
- Differential signal conversions (16-bit mode only)
- Single-ended signal conversions (12-bit mode only)
- Input multiplexer with up to 16 channels (single-ended) or 8 channels (differential)
- 16 configurable SOCs
- 16 individually addressable result registers
- Multiple trigger sources
  - Software immediate start
  - All ePWMs
  - GPIO XINT2
  - CPU timers
  - ADCINT1 or 2
- Four flexible PIE interrupts
- Burst mode
- Four post-processing blocks, each with:
  - Saturating offset calibration
  - Error from setpoint calculation
  - High, low, and zero-crossing compare, with interrupt and ePWM trip capability
  - Trigger-to-sample delay capture

图 5-30 shows the ADC module block diagram.

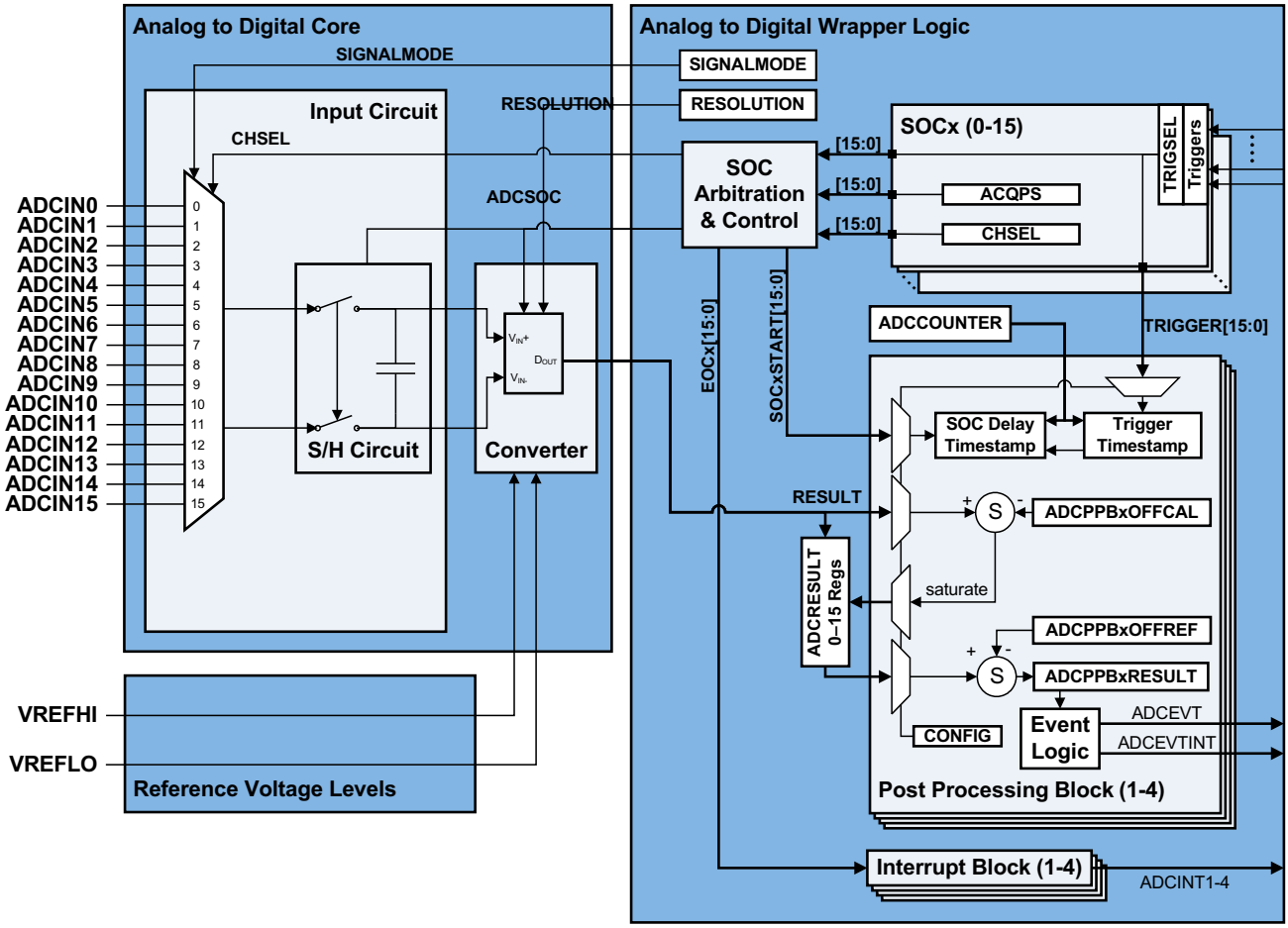

图 5-30. ADC Module Block Diagram

5.10.1.1 ADC Configurability

Some ADC configurations are individually controlled by the SOCs, while others are controlled by each ADC module. 表 5-41 summarizes the basic ADC options and their level of configurability.

表 5-41. ADC Options and Configuration Levels

OPTIONS	CONFIGURABILITY
Clock	By the module(1)
Resolution	By the module(1)
Signal mode	By the module
Reference voltage source	Not configurable (external reference only)
Trigger source	By the SOC(1)
Converted channel	By the SOC
Acquisition window duration	By the SOC(1)
EOC location	By the module
Burst mode	By the module(1)

(1) Writing these values differently to different ADC modules could cause the ADCs to operate asynchronously. For guidance on when the ADCs are operating synchronously or asynchronously, see the Ensuring Synchronous Operation section of the Analog-to-Digital Converter (ADC) chapter in the *TMS320F2837xS Microcontrollers Technical Reference Manual*.

版权 © 2014–2020, Texas Instruments Incorporated

5.10.1.1.1 Signal Mode

The ADC supports two signal modes: single-ended and differential. In single-ended mode, the input voltage to the converter is sampled through a single pin (ADCINx), referenced to VREFLO. In differential signaling mode, the input voltage to the converter is sampled through a pair of input pins, one of which is the positive input (ADCINxP) and the other is the negative input (ADCINxN). The actual input voltage is the difference between the two (ADCINxP – ADCINxN). 图 5-31 shows the differential signaling mode. 图 5-32 shows the single-ended signaling mode.

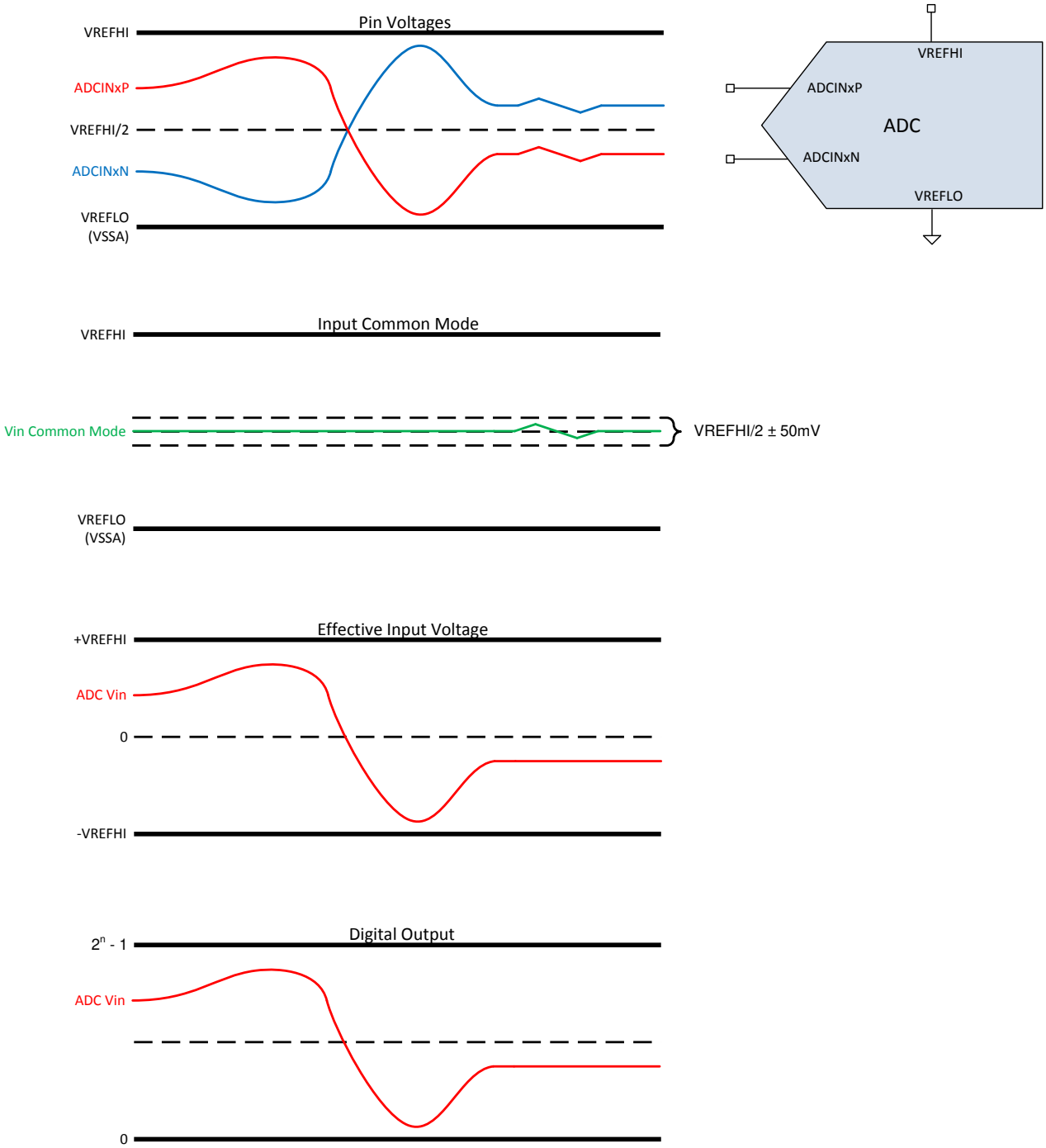

图 5-31. Differential Signaling Mode

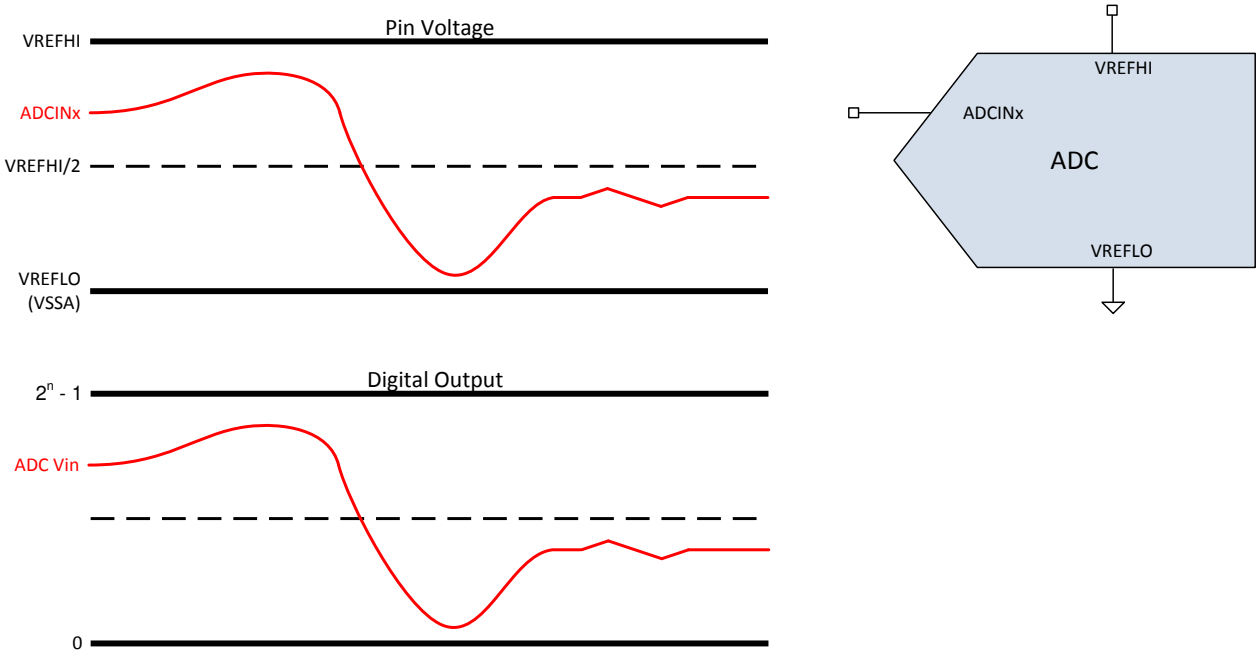

图 5-32. Single-ended Signaling Mode

版权 © 2014–2020, Texas Instruments Incorporated

5.10.1.2 ADC Electrical Data and Timing

Table 5-42 shows the ADC operating conditions for 16-bit differential mode. Table 5-43 shows the ADC characteristics for 16-bit differential mode. Table 5-44 shows the ADC operating conditions for 12-bit single-ended mode. Table 5-45 shows the ADC characteristics for 12-bit single-ended mode. Table 5-46 shows the ADCEXTSOC timing requirements.

Table 5-42. ADC Operating Conditions (16-Bit Differential Mode)

over recommended operating conditions (unless otherwise noted)

	MIN	TYP	MAX	UNIT
ADCCLK (derived from PERx.SYSCLK)	5		50	MHz
Sample window duration (set by ACQPS and PERx.SYSCLK)(1)	320			ns
V_{REFHI}	2.4	2.5 or 3.0	V_{DDA}	V
V_{REFLO}	V_{SSA}	0	V_{SSA}	V
$V_{REFHI} – V_{REFLO}$	2.4		V_{DDA}	V
ADC input conversion range	V_{REFLO}		V_{REFHI}	V
ADC input signal common mode voltage(2)(3)	$V_{REFCM} – 50$	V_{REFCM}	$V_{REFCM} + 50$	mV

(1) The sample window must also be at least as long as 1 ADCCLK cycle for correct ADC operation.
(2) $V_{REFCM} = (V_{REFHI} + V_{REFLO})/2$
(3) The V_{REFCM} requirements will not be met if the negative ADC input pin is connected to V_{SSA} or V_{REFLO}.

NOTE

The ADC inputs should be kept below V_{DDA} + 0.3 V during operation. If an ADC input exceeds this level, the V_{REF} internal to the device may be disturbed, which can impact results for other ADC or DAC inputs using the same V_{REF}.

NOTE

The V_{REFHI} pin must be kept below V_{DDA} + 0.3 V to ensure proper functional operation. If the V_{REFHI} pin exceeds this level, a blocking circuit may activate, and the internal value of V_{REFHI} may float to 0 V internally, giving improper ADC conversion or DAC output.

Table 5-43. ADC Characteristics (16-Bit Differential Mode)

over recommended operating conditions (unless otherwise noted)(1)

PARAMETER	TEST CONDITIONS	MIN	TYP	MAX	UNIT
ADC conversion cycles(2)		29.6		31	ADCCLKs
Power-up time (after setting ADCPWDNZ to first conversion)				500	µs
Gain error		–64	±9	64	LSBs
Offset error(3)		–16	±9	16	LSBs
Channel-to-channel gain error			±6		LSBs
Channel-to-channel offset error			±3		LSBs
ADC-to-ADC gain error	Identical V_{REFHI} and V_{REFLO} for all ADCs		±6		LSBs
ADC-to-ADC offset error	Identical V_{REFHI} and V_{REFLO} for all ADCs		±3		LSBs
DNL(4)		> –1	±0.5	1	LSBs
INL		–3	±1.5	3	LSBs
SNR(5)(6)	V_{REFHI} = 2.5 V, f_{in} = 10 kHz		87.6		dB
THD(5)(6)	V_{REFHI} = 2.5 V, f_{in} = 10 kHz		–93.5		dB
SFDR(5)(6)	V_{REFHI} = 2.5 V, f_{in} = 10 kHz		95.4		dB
SINAD(5)(6)	V_{REFHI} = 2.5 V, f_{in} = 10 kHz		86.6		dB
ENOB(5)(6)	V_{REFHI} = 2.5 V, f_{in} = 10 kHz, single ADC(7)		14.1		bits
	V_{REFHI} = 2.5 V, f_{in} = 10 kHz, synchronous ADCs(8)		14.1		bits
	V_{REFHI} = 2.5 V, f_{in} = 10 kHz, asynchronous ADCs(9)		Not supported		bits
PSRR	V_{DDA} = 3.3-V DC + 200 mV DC up to Sine at 1 kHz		77		dB
PSRR	V_{DDA} = 3.3-V DC + 200 mV Sine at 800 kHz		74		dB
CMRR	DC to 1 MHz		60		dB
V_{REFHI} input current			190		µA
ADC-to-ADC isolation(6)(10)(11)	V_{REFHI} = 2.5 V, synchronous ADCs(8)	–2		2	LSBs
	V_{REFHI} = 2.5 V, asynchronous ADCs(9)		Not supported		LSBs

(1) Typical values are measured with V_{REFHI} = 2.5 V and V_{REFLO} = 0 V. Minimum and Maximum values are tested or characterized with V_{REFHI} = 2.5 V and V_{REFLO} = 0 V.
(2) See 节 5.10.1.2.2.
(3) Difference from conversion result 32768 when ADCINp = ADCINn = V_{REFCM}.
(4) No missing codes.
(5) AC parameters will be impacted by clock source accuracy and jitter, this should be taken into account when selecting the clock source for the system. The clock source used for these parameters was a high-accuracy external clock fed through the PLL. The on-chip Internal Oscillator has higher jitter than an external crystal and these parameters will degrade if it is used as a clock source.
(6) I/O activity is minimized on pins adjacent to ADC input and V_{REFHI} pins as part of best practices to reduce capacitive coupling and crosstalk.
(7) One ADC operating while all other ADCs are idle.
(8) All ADCs operating with identical ADCCLK, S+H durations, triggers, and resolution.
(9) Any ADCs operating with heterogeneous ADCCLK, S+H durations, triggers, or resolution.
(10) Maximum DC code deviation due to operation of multiple ADCs simultaneously.
(11) Value based on characterization.

Copyright © 2014–2020, Texas Instruments Incorporated

Table 5-44. ADC Operating Conditions (12-Bit Single-Ended Mode)

over recommended operating conditions (unless otherwise noted)

	MIN	TYP	MAX	UNIT
ADCCLK (derived from PERx.SYSCLK)	5		50	MHz
Sample window duration (set by ACQPS and PERx.SYSCLK)(1)	75			ns
V_{REFHI}	2.4	2.5 or 3.0	V_{DDA}	V
V_{REFLO}	V_{SSA}	0	V_{SSA}	V
$V_{REFHI} – V_{REFLO}$	2.4		V_{DDA}	V
ADC input conversion range	V_{REFLO}		V_{REFHI}	V

(1) The sample window must also be at least as long as 1 ADCCLK cycle for correct ADC operation.

NOTE

The ADC inputs should be kept below V_{DDA} + 0.3 V during operation. If an ADC input exceeds this level, the V_{REF} internal to the device may be disturbed, which can impact results for other ADC or DAC inputs using the same V_{REF}.

NOTE

The V_{REFHI} pin must be kept below V_{DDA} + 0.3 V to ensure proper functional operation. If the V_{REFHI} pin exceeds this level, a blocking circuit may activate, and the internal value of V_{REFHI} may float to 0 V internally, giving improper ADC conversion or DAC output.

Table 5-45. ADC Characteristics (12-Bit Single-Ended Mode)

over recommended operating conditions (unless otherwise noted)(1)

PARAMETER	TEST CONDITIONS	MIN	TYP	MAX	UNIT
ADC conversion cycles(2)		10.1		11	ADCCLKs
Power-up time				500	µs
Gain error		–5	±3	5	LSBs
Offset error		–4	±2	4	LSBs
Channel-to-channel gain error			±4		LSBs
Channel-to-channel offset error			±2		LSBs
ADC-to-ADC gain error	Identical V_{REFHI} and V_{REFLO} for all ADCs		±4		LSBs
ADC-to-ADC offset error	Identical V_{REFHI} and V_{REFLO} for all ADCs		±2		LSBs
DNL(3)		> –1	±0.5	1	LSBs
INL		–2	±1.0	2	LSBs
SNR(4)(5)	V_{REFHI} = 2.5 V, f_{in} = 100 kHz		68.8		dB
THD(4)(5)	V_{REFHI} = 2.5 V, f_{in} = 100 kHz		–78.4		dB
SFDR(4)(5)	V_{REFHI} = 2.5 V, f_{in} = 100 kHz		79.2		dB
SINAD(4)(5)	V_{REFHI} = 2.5 V, f_{in} = 100 kHz		68.4		dB
ENOB(4)(5)	V_{REFHI} = 2.5 V, f_{in} = 100 kHz, single ADC(6), all packages		11.1		bits
	V_{REFHI} = 2.5 V, f_{in} = 100 kHz, synchronous ADCs(7), all packages		11.1		
	V_{REFHI} = 2.5 V, f_{in} = 100 kHz, asynchronous ADCs(8), 100-pin PZP package		Not supported		
	V_{REFHI} = 2.5 V, f_{in} = 100 kHz, asynchronous ADCs(8), 176-pin PTP package		9.7		
	V_{REFHI} = 2.5 V, f_{in} = 100 kHz, asynchronous ADCs(8), 337-ball ZWT package		10.9		
PSRR	V_{DDA} = 3.3-V DC + 200 mV DC up to Sine at 1 kHz		60		dB
PSRR	V_{DDA} = 3.3-V DC + 200 mV Sine at 800 kHz		57		dB
ADC-to-ADC isolation(5)(9)(10)	V_{REFHI} = 2.5 V, synchronous ADCs(7), all packages	–1		1	LSBs
	V_{REFHI} = 2.5 V, asynchronous ADCs(8), 100-pin PZP package		Not supported		
	V_{REFHI} = 2.5 V, asynchronous ADCs(8), 176-pin PTP package	–9		9	
	V_{REFHI} = 2.5 V, asynchronous ADCs(8), 337-ball ZWT package	–2		2	
V_{REFHI} input current			130		µA

(1) Typical values are measured with V_{REFHI} = 2.5 V and V_{REFLO} = 0 V. Minimum and Maximum values are tested or characterized with V_{REFHI} = 2.5 V and V_{REFLO} = 0 V.
(2) See 节 5.10.1.2.2.
(3) No missing codes.
(4) AC parameters will be impacted by clock source accuracy and jitter, this should be taken into account when selecting the clock source for the system. The clock source used for these parameters was a high-accuracy external clock fed through the PLL. The on-chip Internal Oscillator has higher jitter than an external crystal and these parameters will degrade if it is used as a clock source.
(5) I/O activity is minimized on pins adjacent to ADC input and V_{REFHI} pins as part of best practices to reduce capacitive coupling and crosstalk.
(6) One ADC operating while all other ADCs are idle.
(7) All ADCs operating with identical ADCCLK, S+H durations, triggers, and resolution.
(8) Any ADCs operating with heterogeneous ADCCLK, S+H durations, triggers, or resolution.
(9) Maximum DC code deviation due to operation of multiple ADCs simultaneously.
(10) Value based on characterization.

Copyright © 2014–2020, Texas Instruments Incorporated

Table 5-46. ADCEXTSOC Timing Requirements(1)

			MIN	MAX	UNIT
$t_{w(INT)}$	Pulse duration, INT input low/high	Synchronous	$2t_{c(SYSCLK)}$		cycles
		With qualifier	$t_{w(IQSW)} + t_{w(SP)} + 1t_{c(SYSCLK)}$		cycles

(1) For an explanation of the input qualifier parameters, see Table 5-24.

5.10.1.2.1 ADC Input Models

注

ADC channels ADCINA0, ADCINA1, and ADCINB1 have a 50-kΩ pulldown resistor to V_{SSA}.

For differential operation, the ADC input characteristics are given by 表 5-47 and 图 5-33.

表 5-47. Differential Input Model Parameters

	DESCRIPTION	VALUE (16-BIT MODE)
C_p	Parasitic input capacitance	See 表 5-49
R_{on}	Sampling switch resistance	700 Ω
C_h	Sampling capacitor	16.5 pF
R_s	Nominal source impedance	50 Ω

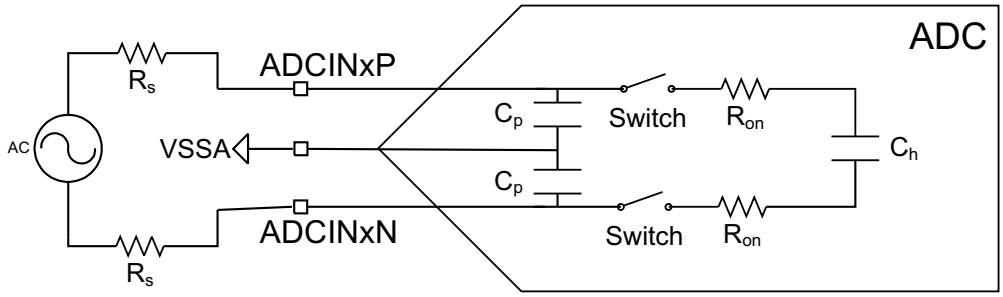

图 5-33. Differential Input Model

For single-ended operation, the ADC input characteristics are given by 表 5-48 and 图 5-34.

表 5-48. Single-Ended Input Model Parameters

	DESCRIPTION	VALUE (12-BIT MODE)
C_p	Parasitic input capacitance	See 表 5-49
R_{on}	Sampling switch resistance	425 Ω
C_h	Sampling capacitor	14.5 pF
R_s	Nominal source impedance	50 Ω

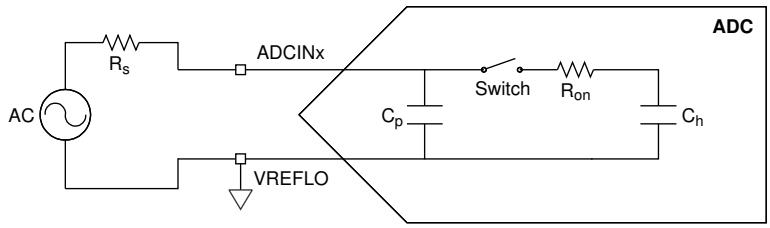

图 5-34. Single-Ended Input Model

表 5-49 shows the parasitic capacitance on each channel. Also, enabling a comparator adds approximately 1.4 pF of capacitance on positive comparator inputs and 2.5 pF of capacitance on negative comparator inputs.

表 5-49. Per-Channel Parasitic Capacitance

ADC CHANNEL	C_p (pF)	
	COMPARATOR DISABLED	COMPARATOR ENABLED
ADCINA0	12.9	N/A
ADCINA1	10.3	N/A
ADCINA2	5.9	7.3
ADCINA3	6.3	8.8
ADCINA4	5.9	7.3
ADCINA5	6.3	8.8
ADCINB0(1)	117.0	N/A
ADCINB1	10.6	N/A
ADCINB2	5.9	7.3
ADCINB3	6.2	8.7
ADCINB4	5.2	N/A
ADCINB5	5.1	N/A
ADCINC2	5.5	6.9
ADCINC3	5.8	8.3
ADCINC4	5.0	6.4
ADCINC5	5.3	7.8
ADCIND0	5.3	6.7
ADCIND1	5.7	8.2
ADCIND2	5.3	6.7
ADCIND3	5.6	8.1
ADCIND4	4.3	N/A
ADCIND5	4.3	N/A
ADCIN14	8.6	10.0
ADCIN15	9.0	11.5

(1) The increased capacitance is due to VDAC functionality.

These input models should be used along with actual signal source impedance to determine the acquisition window duration. See the Choosing an Acquisition Window Duration section of the *TMS320F2837xS Microcontrollers Technical Reference Manual* for more information.

The user should analyze the ADC input setting assuming worst-case initial conditions on C_h. This will require assuming that C_h could start the S+H window completely charged to V_{REFHI} or completely discharged to V_{REFLO}. When the ADC transitions from an odd-numbered channel to an even-numbered channel, or vice-versa, the actual initial voltage on C_h will be close to being completely discharged to V_{REFLO}. For even-to-even or odd-to-odd channel transitions, the initial voltage on C_h will be close to the voltage of the previously converted channel.

版权 © 2014–2020, Texas Instruments Incorporated

5.10.1.2.2 ADC Timing Diagrams

表 5-51 lists the ADC timings in 12-bit mode (SYSCLK cycles). 表 5-52 lists the ADC timings in 16-bit mode. 图 5-35 and 图 5-36 show the ADC conversion timings for two SOCs given the following assumptions:

- SOC0 and SOC1 are configured to use the same trigger.
- No other SOCs are converting or pending when the trigger occurs.
- The round robin pointer is in a state that causes SOC0 to convert first.
- ADCINTSEL is configured to set an ADCINT flag upon end of conversion for SOC0 (whether this flag propagates through to the CPU to cause an interrupt is determined by the configurations in the PIE module).

表 5-50 lists the descriptions of the ADC timing parameters that are in 图 5-35 and 图 5-36.

表 5-50. ADC Timing Parameters

PARAMETER	DESCRIPTION
t_{SH}	The duration of the S+H window. At the end of this window, the value on the S+H capacitor becomes the voltage to be converted into a digital value. The duration is given by (ACQPS + 1) SYSCLK cycles. ACQPS can be configured individually for each SOC, so t_{SH} will not necessarily be the same for different SOCs. **Note:** The value on the S+H capacitor will be captured approximately 5 ns before the end of the S+H window regardless of device clock settings.
t_{LAT}	The time from the end of the S+H window until the ADC conversion results latch in the ADCRESULTx register. If the ADCRESULTx register is read before this time, the previous conversion results will be returned.
t_{EOC}	The time from the end of the S+H window until the next ADC conversion S+H window can begin. The subsequent sample can start before the conversion results are latched.
t_{INT}	The time from the end of the S+H window until an ADCINT flag is set (if configured). If the INTPULSEPOS bit in the ADCCTL1 register is set, t_{INT} will coincide with the conversion results being latched into the result register. If the INTPULSEPOS bit is 0, t_{INT} will coincide with the end of the S+H window. If t_{INT} triggers a read of the ADC result register (directly through DMA or indirectly by triggering an ISR that reads the result), care must be taken to ensure the read occurs after the results latch (otherwise, the previous results will be read).

表 5-51. ADC Timings in 12-Bit Mode (SYSCLK Cycles)

ADCCLK PRESCALE		SYSCLK CYCLES				ADCCLK CYCLES
ADCCTL2 [PRESCALE]	RATIO ADCCLK:SYSCLK	t_{EOC}	t_{LAT} (1)	$t_{INT(EARLY)}$	$t_{INT(LATE)}$	t_{EOC}
0	1	11	13	1	11	11.0
1	1.5	Invalid				
2	2	21	23	1	21	10.5
3	2.5	26	28	1	26	10.4
4	3	31	34	1	31	10.3
5	3.5	36	39	1	36	10.3
6	4	41	44	1	41	10.3
7	4.5	46	49	1	46	10.2
8	5	51	55	1	51	10.2
9	5.5	56	60	1	56	10.2
10	6	61	65	1	61	10.2
11	6.5	66	70	1	66	10.2
12	7	71	76	1	71	10.1
13	7.5	76	81	1	76	10.1
14	8	81	86	1	81	10.1
15	8.5	86	91	1	86	10.1

(1) Refer to the "ADC: DMA Read of Stale Result" advisory in the *TMS320F2837xS MCUs Silicon Errata*.

版权 © 2014–2020, Texas Instruments Incorporated

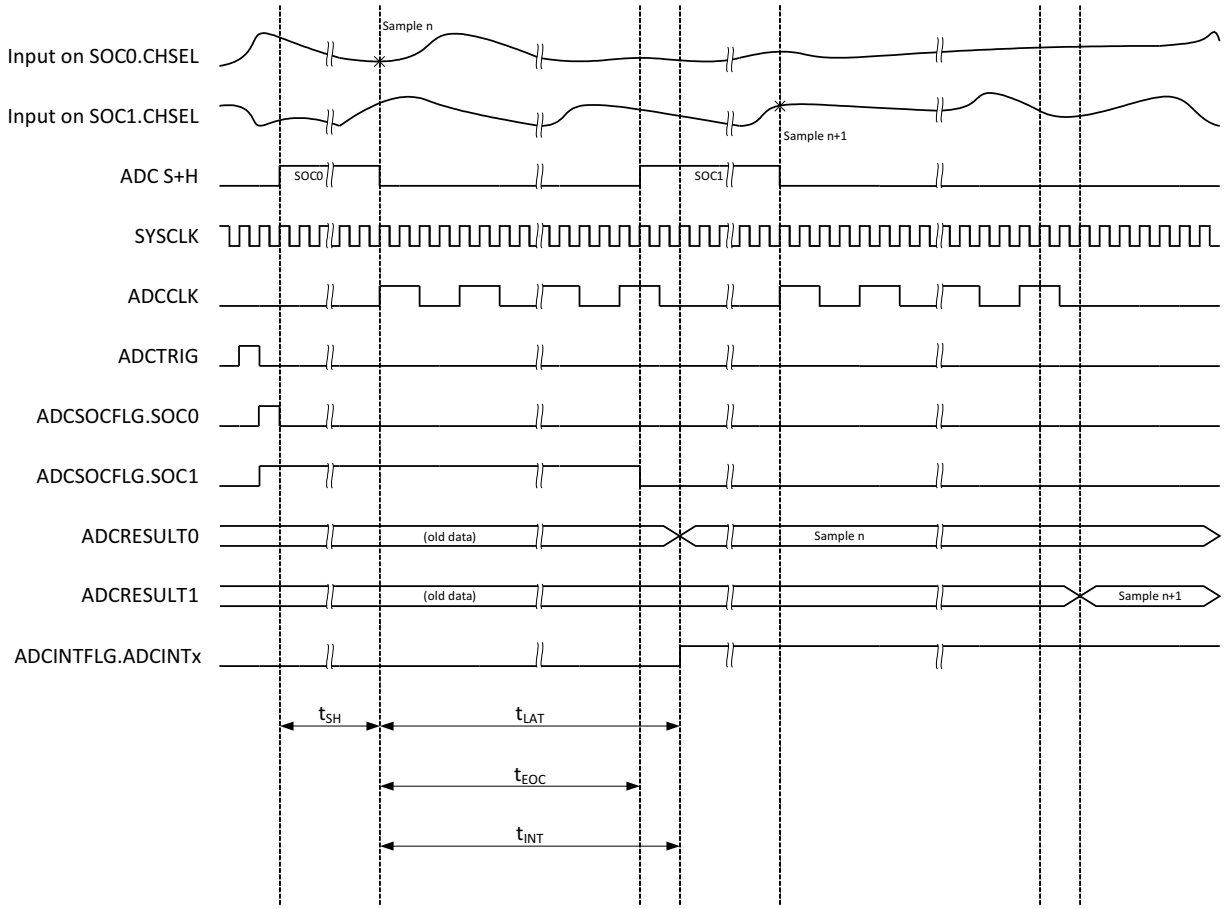

图 5-35. ADC Timings for 12-Bit Mode

表 5-52. ADC Timings in 16-Bit Mode

ADCCLK PRESCALE		SYSCLK CYCLES				ADCCLK CYCLES
ADCCTL2 [PRESCALE]	RATIO ADCCLK:SYSCLK	t_{EOC}	t_{LAT} (1)	$t_{INT(EARLY)}$	$t_{INT(LATE)}$	t_{EOC}
0	1	31	32	1	31	31.0
1	1.5	Invalid				
2	2	60	61	1	60	30.0
3	2.5	75	75	1	75	30.0
4	3	90	91	1	90	30.0
5	3.5	104	106	1	104	29.7
6	4	119	120	1	119	29.8
7	4.5	134	134	1	134	29.8
8	5	149	150	1	149	29.8
9	5.5	163	165	1	163	29.6
10	6	178	179	1	178	29.7
11	6.5	193	193	1	193	29.7
12	7	208	209	1	208	29.7
13	7.5	222	224	1	222	29.6
14	8	237	238	1	237	29.6
15	8.5	252	252	1	252	29.6

(1) Refer to the "ADC: DMA Read of Stale Result" advisory in the *TMS320F2837xS MCUs Silicon Errata*.

版权 © 2014–2020, Texas Instruments Incorporated

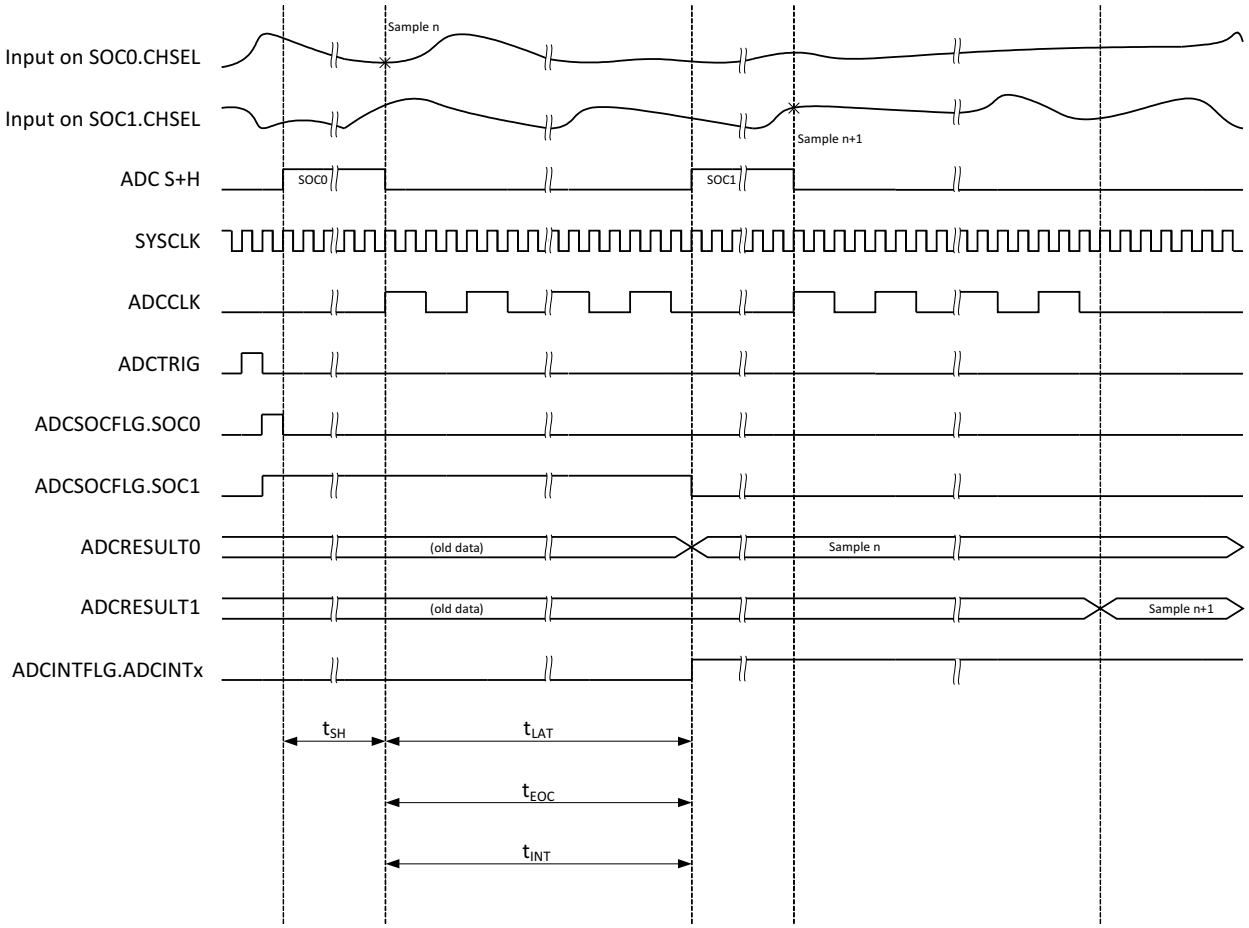

图 5-36. ADC Timings for 16-Bit Mode

5.10.1.3 Temperature Sensor Electrical Data and Timing

The temperature sensor can be used to measure the device junction temperature. The temperature sensor is sampled through an internal connection to the ADC and translated into a temperature through TI-provided software. When sampling the temperature sensor, the ADC must meet the acquisition time in Table 5-53.

Table 5-53. Temperature Sensor Electrical Characteristics

over recommended operating conditions (unless otherwise noted)

PARAMETER	MIN	TYP	MAX	UNIT
Temperature accuracy		±15		°C
Start-up time (TSNSCTL[ENABLE] to sampling temperature sensor)		500		µs
ADC acquisition time	700			ns

版权 © 2014–2020, Texas Instruments Incorporated

5.10.2 Comparator Subsystem (CMPSS)

Each CMPSS module includes two comparators, two internal voltage reference DACs (CMPSS DACs), two digital glitch filters, and one ramp generator. There are two inputs, CMPINxP and CMPINxN. Each of these inputs will be internally connected to an ADCIN pin. The CMPINxP pin is always connected to the positive input of the CMPSS comparators. CMPINxN can be used instead of the DAC output to drive the negative comparator inputs. There are two comparators, and therefore two outputs from the CMPSS module, which are connected to the input of a digital filter module before being passed on to the Comparator TRIP crossbar and either PWM modules or directly to a GPIO pin. 图 5-37 shows the CMPSS connectivity on the 337-ball ZWT and 176-pin PTP packages. 图 5-38 shows CMPSS connectivity on the 100-pin PZP package.

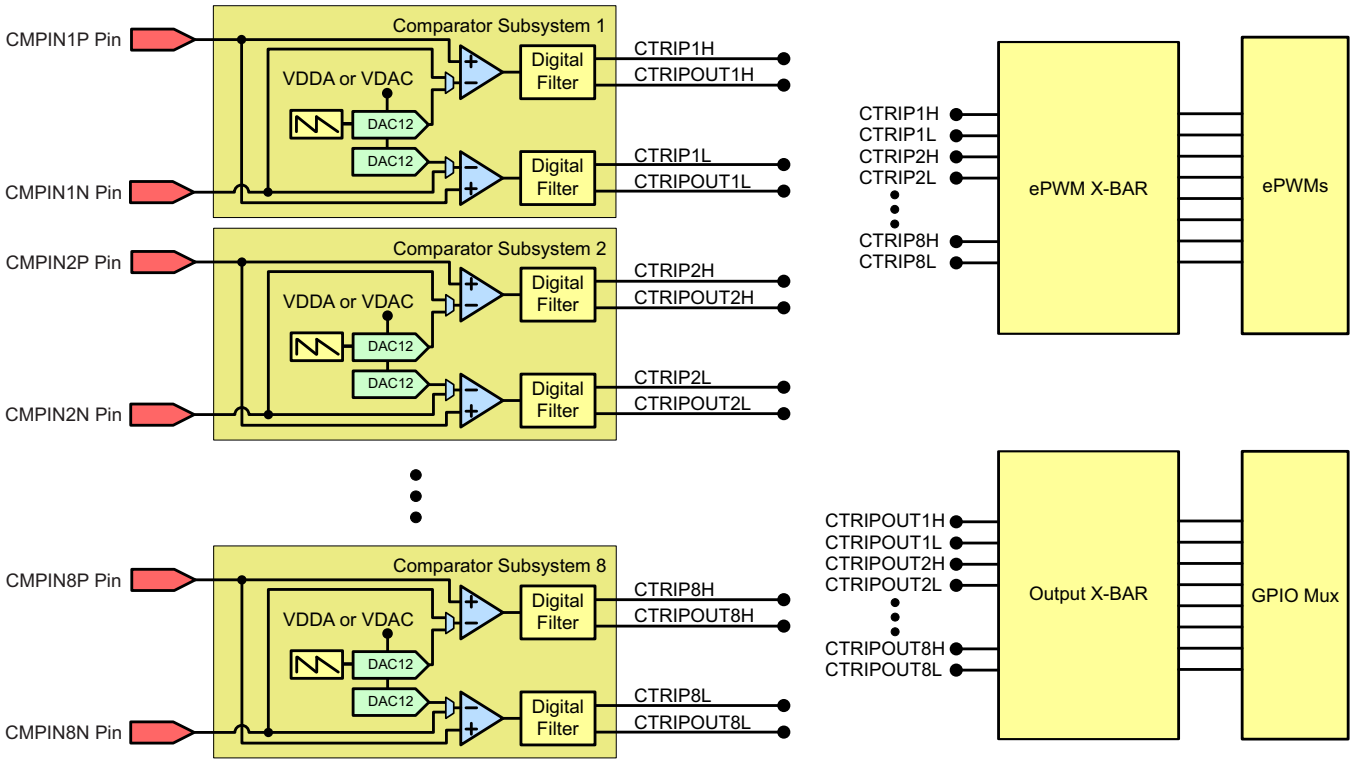

图 5-37. CMPSS Connectivity (337-Ball ZWT and 176-Pin PTP)

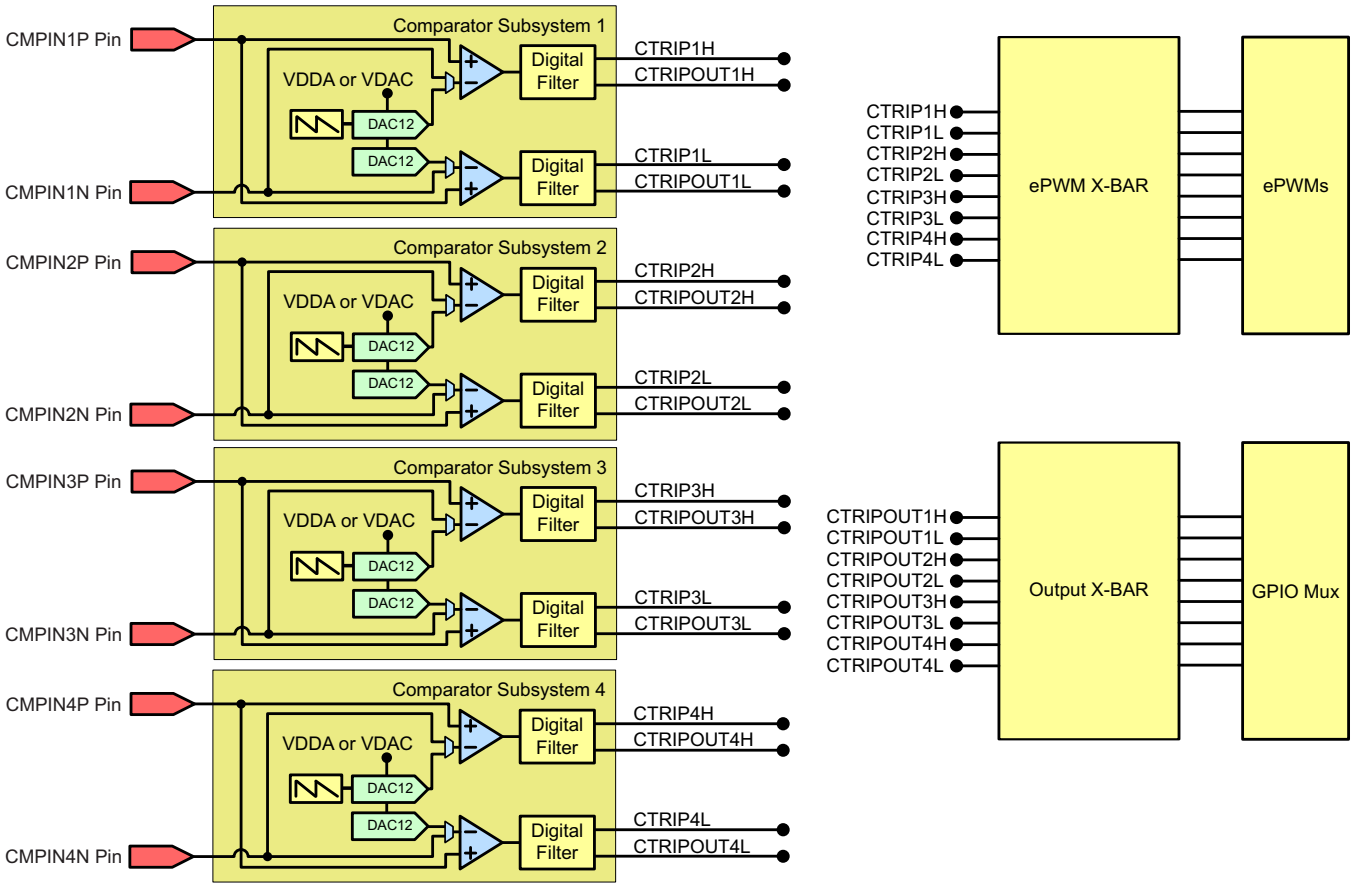

图 5-38. CMPSS Connectivity (100-Pin PZP)

版权 © 2014–2020, Texas Instruments Incorporated

5.10.2.1 CMPSS Electrical Data and Timing

Table 5-54 shows the comparator electrical characteristics. Figure 5-39 shows the CMPSS comparator input referred offset. Figure 5-40 shows the CMPSS comparator hysteresis.

Table 5-54. Comparator Electrical Characteristics

over recommended operating conditions (unless otherwise noted)

PARAMETER	TEST CONDITIONS	MIN	TYP	MAX	UNIT
Power-up time				500 (1)	µs
Comparator input (CMPINxx) range		0		V_{DDA}	V
Input referred offset error	Low common mode, inverting input set to 50 mV	–20		20	mV
Hysteresis (2)	1x		12		CMPSS DAC LSB
	2x		24		
	3x		36		
	4x		48		
Response time (delay from CMPINx input change to output on ePWM X-BAR or Output X-BAR)	Step response		21	60	ns
	Ramp response (1.65 V/µs)		26		
	Ramp response (8.25 mV/µs)		30		
Common Mode Rejection Ratio (CMRR)		40			dB

(1) See the "Analog Bandgap References" advisory of the *TMS320F2837xS MCUs Silicon Errata*.
(2) The CMPSS DAC is used as the reference to determine how much hysteresis to apply. Therefore, hysteresis will scale with the CMPSS DAC reference voltage. Hysteresis is available for all comparator input source configurations.

NOTE

The CMPSS inputs must be kept below V_{DDA} + 0.3 V to ensure proper functional operation. If a CMPSS input exceeds this level, an internal blocking circuit will isolate the internal comparator from the external pin until the external pin voltage returns below V_{DDA} + 0.3 V. During this time, the internal comparator input will be floating and can decay below V_{DDA} within approximately 0.5 µs. After this time, the comparator could begin to output an incorrect result depending on the value of the other comparator input.

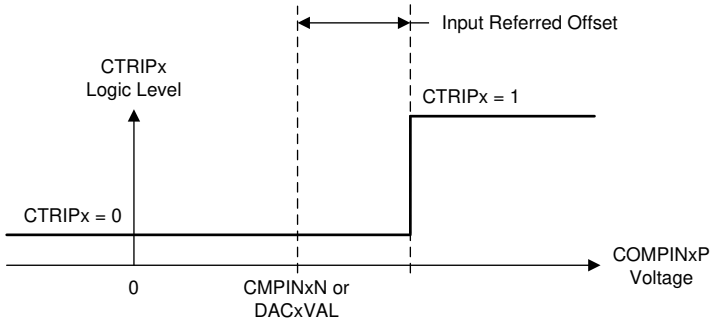

Figure 5-39. CMPSS Comparator Input Referred Offset

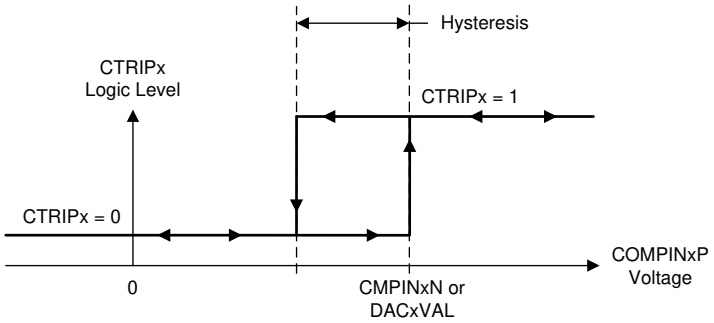

Figure 5-40. CMPSS Comparator Hysteresis

Copyright © 2014–2020, Texas Instruments Incorporated

Table 5-55 shows the CMPSS DAC static electrical characteristics. Figure 5-41 shows the CMPSS DAC static offset. Figure 5-42 shows the CMPSS DAC static gain. Figure 5-43 shows the CMPSS DAC static linearity.

Table 5-55. CMPSS DAC Static Electrical Characteristics

over recommended operating conditions (unless otherwise noted)

PARAMETER	TEST CONDITIONS	MIN	TYP	MAX	UNIT
CMPSS DAC output range	Internal reference	0		V_{DDA} (1)	V
	External reference	0		VDAC	
Static offset error (2)		–25		25	mV
Static gain error (2)		–2		2	% of FSR
Static DNL	Endpoint corrected	>–1		4	LSB
Static INL	Endpoint corrected	–16		16	LSB
Settling time	Settling to 1 LSB after full-scale output change			1	µs
Resolution			12		bits
CMPSS DAC output disturbance (3)	Error induced by comparator trip or CMPSS DAC code change within the same CMPSS module	–100		100	LSB
CMPSS DAC disturbance time (3)			200		ns
VDAC reference voltage	When VDAC is reference	2.4	2.5 or 3.0	V_{DDA}	V
VDAC load (4)	When VDAC is reference		6		kΩ

(1) The maximum output voltage is V_{DDA} when VDAC > V_{DDA}.
(2) Includes comparator input referred errors.
(3) Disturbance error may be present on the CMPSS DAC output for a certain amount of time after a comparator trip.
(4) Per active CMPSS module.

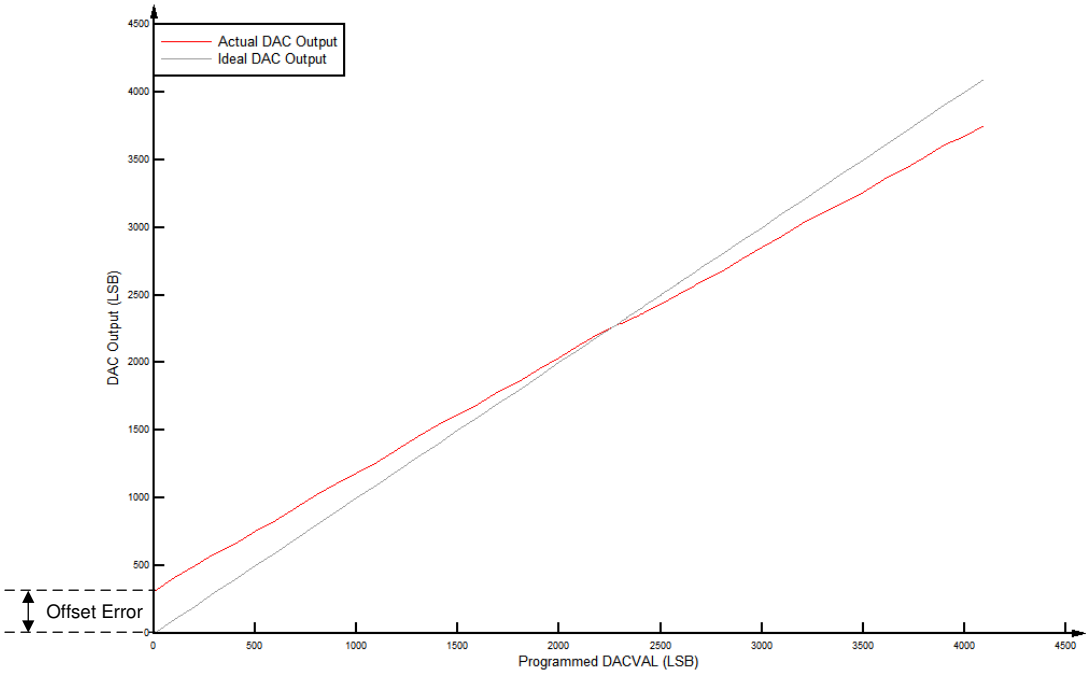

Figure 5-41. CMPSS DAC Static Offset

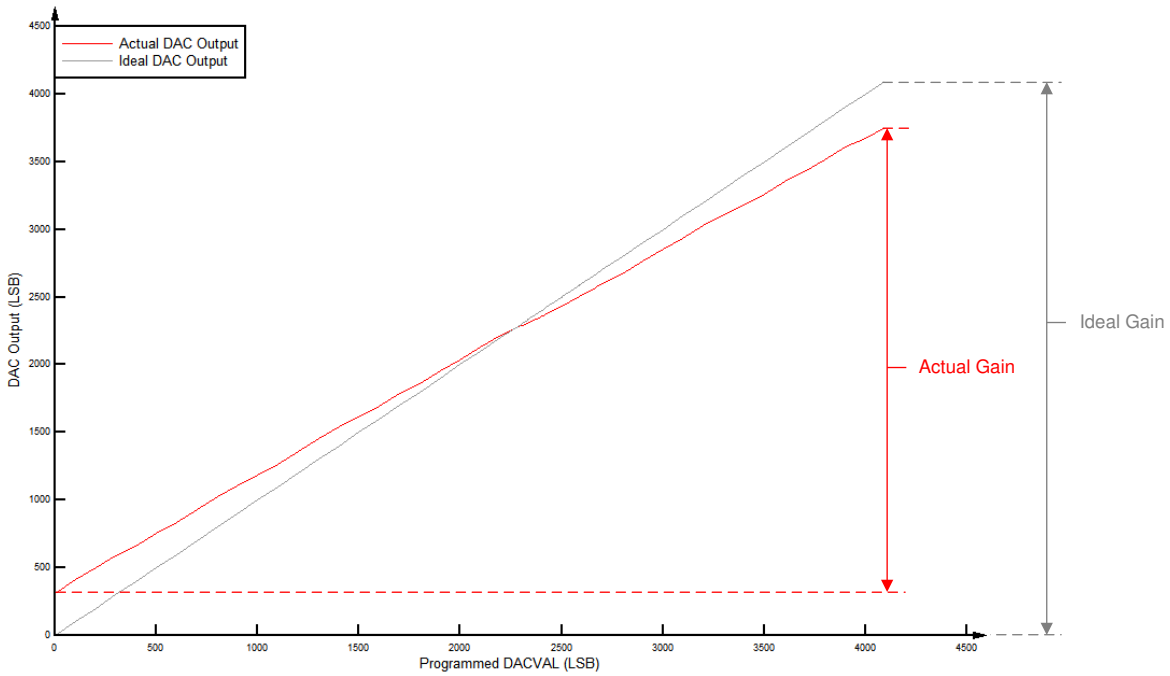

Figure 5-42. CMPSS DAC Static Gain

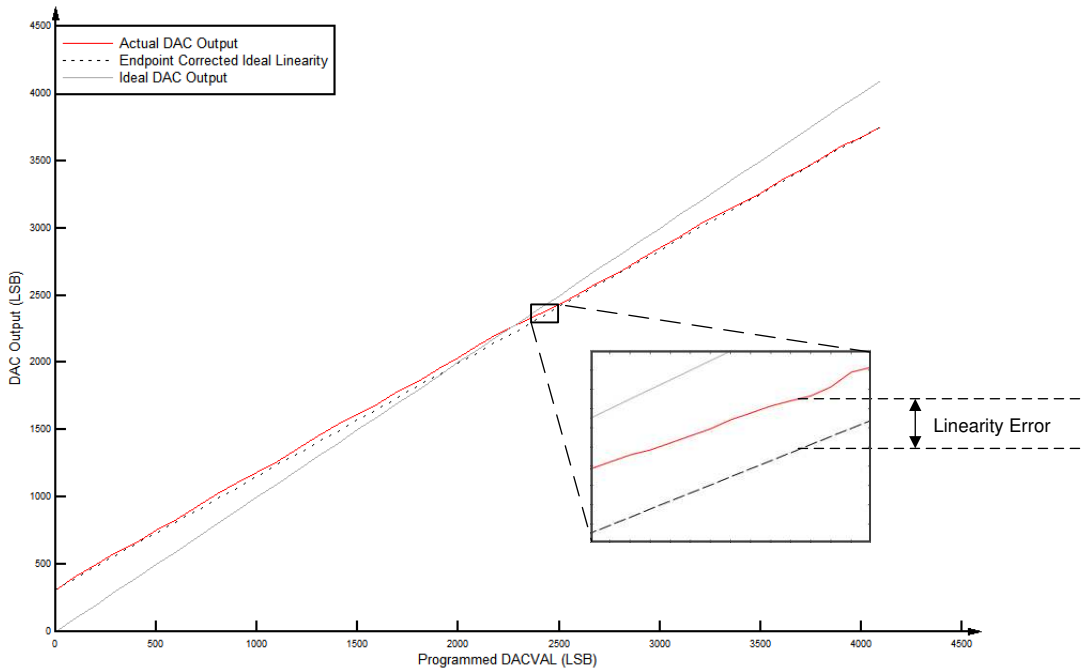

Figure 5-43. CMPSS DAC Static Linearity

版权 © 2014–2020, Texas Instruments Incorporated

5.10.3 Buffered Digital-to-Analog Converter (DAC)

The buffered DAC module consists of an internal 12-bit DAC and an analog output buffer that is capable of driving an external load. An integrated pulldown resistor on the DAC output helps to provide a known pin voltage when the output buffer is disabled. This pulldown resistor cannot be disabled and remains as a passive component on the pin, even for other shared pin mux functions. Software writes to the DAC value register can take effect immediately or can be synchronized with EPWMSYNCPER events.

Each buffered DAC has the following features:

- 12-bit programmable internal DAC
- Selectable reference voltage
- Pulldown resistor on output
- Ability to synchronize with EPWMSYNCPER

The block diagram for the buffered DAC is shown in 图 5-44.

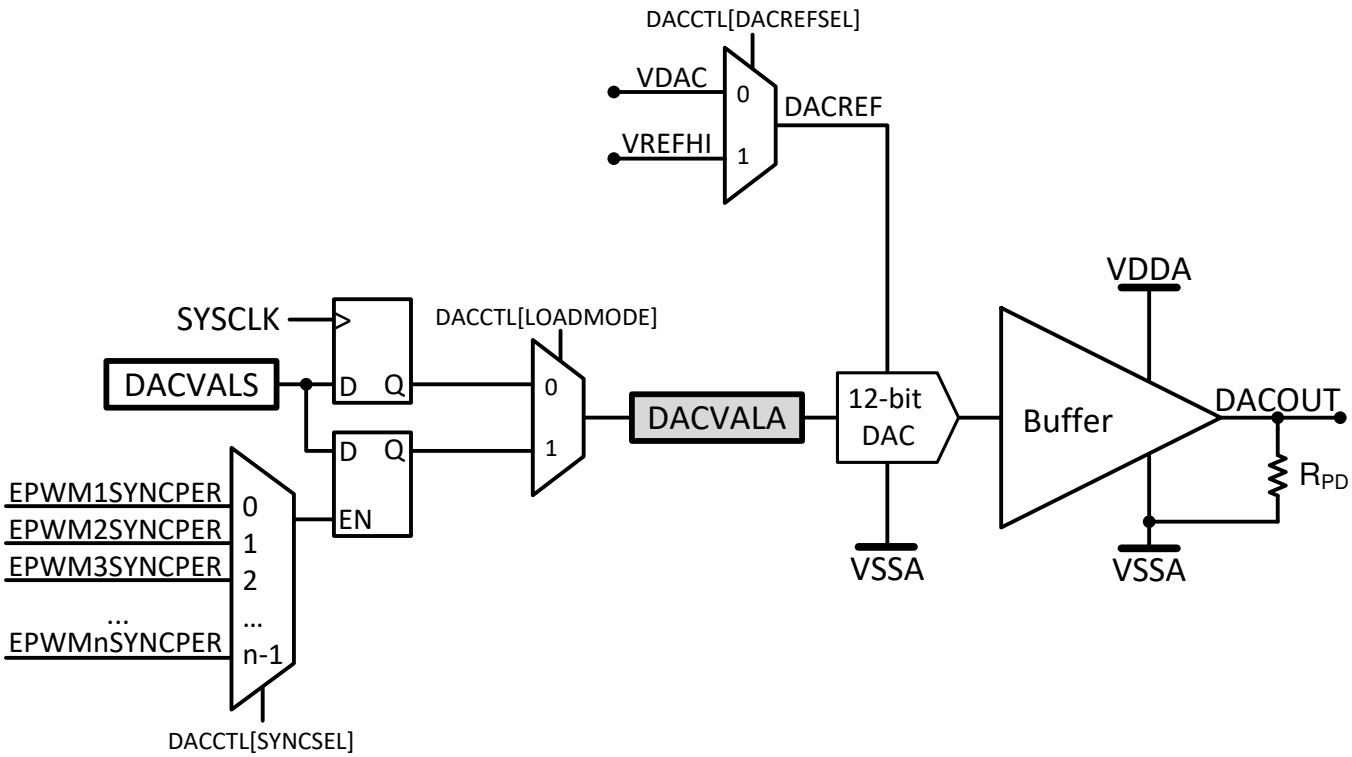

图 5-44. DAC Module Block Diagram

5.10.3.1 Buffered DAC Electrical Data and Timing

Table 5-56 shows the buffered DAC electrical characteristics. Figure 5-45 shows the buffered DAC offset. Figure 5-46 shows the buffered DAC gain. Figure 5-47 shows the buffered DAC linearity.

Table 5-56. Buffered DAC Electrical Characteristics

over recommended operating conditions (unless otherwise noted)(1)

PARAMETER	TEST CONDITIONS	MIN	TYP	MAX	UNIT
Power-up time				500(2)	µs
Offset error	Midpoint	–10		10	mV
Gain error(3)		–2.5		2.5	% of FSR
DNL(4)	Endpoint corrected	> –1	±0.4	1	LSB
INL	Endpoint corrected	–5	±2	5	LSB
DACOUTx settling time	Settling to 2 LSBs after 0.3V-to-3V transition		2		µs
Resolution			12		bits
Voltage output range(5)		0.3		V_{DDA} – 0.3	V
Capacitive load	Output drive capability			100	pF
Resistive load	Output drive capability	5			kΩ
R_{PD} pulldown resistor			50		kΩ
Reference voltage(6)	VDAC or V_{REFHI}	2.4	2.5 or 3.0	V_{DDA}	V
Reference input resistance(7)	VDAC or V_{REFHI}		170		kΩ
Output noise	Integrated noise from 100 Hz to 100 kHz		500		µVrms
	Noise density at 10 kHz		711		nVrms/√Hz
Glitch energy			1.5		V-ns
PSRR(8)	DC up to 1 kHz		70		dB
	100 kHz		30		
SNR	1020 Hz		67		dB
THD	1020 Hz		–63		dB
SFDR	1020 Hz, including harmonics and spurs		66		dBc
	1020 Hz, including only spurs		104		

(1) Typical values are measured with V_{REFHI} = 3.3 V unless otherwise noted. Minimum and Maximum values are tested or characterized with V_{REFHI} = 2.5 V.
(2) See the "Analog Bandgap References" advisory of the *TMS320F2837xS MCUs Silicon Errata*.
(3) Gain error is calculated for linear output range.
(4) The DAC output is monotonic.
(5) This is the linear output range of the DAC. The DAC can generate voltages outside this range, but the output voltage will not be linear due to the buffer.
(6) For best PSRR performance, VDAC or V_{REFHI} should be less than V_{DDA}.
(7) Per active Buffered DAC module.
(8) V_{REFHI} = 3.2 V, V_{DDA} = 3.3 V DC + 100 mV Sine.

NOTE

The VDAC pin must be kept below V_{DDA} + 0.3 V to ensure proper functional operation. If the VDAC pin exceeds this level, a blocking circuit may activate, and the internal value of VDAC may float to 0 V internally, giving improper DAC output.

Copyright © 2014–2020, Texas Instruments Incorporated

NOTE

The V_{REFHI} pin must be kept below V_{DDA} + 0.3 V to ensure proper functional operation. If the V_{REFHI} pin exceeds this level, a blocking circuit may activate, and the internal value of V_{REFHI} may float to 0 V internally, giving improper ADC conversion or DAC output.

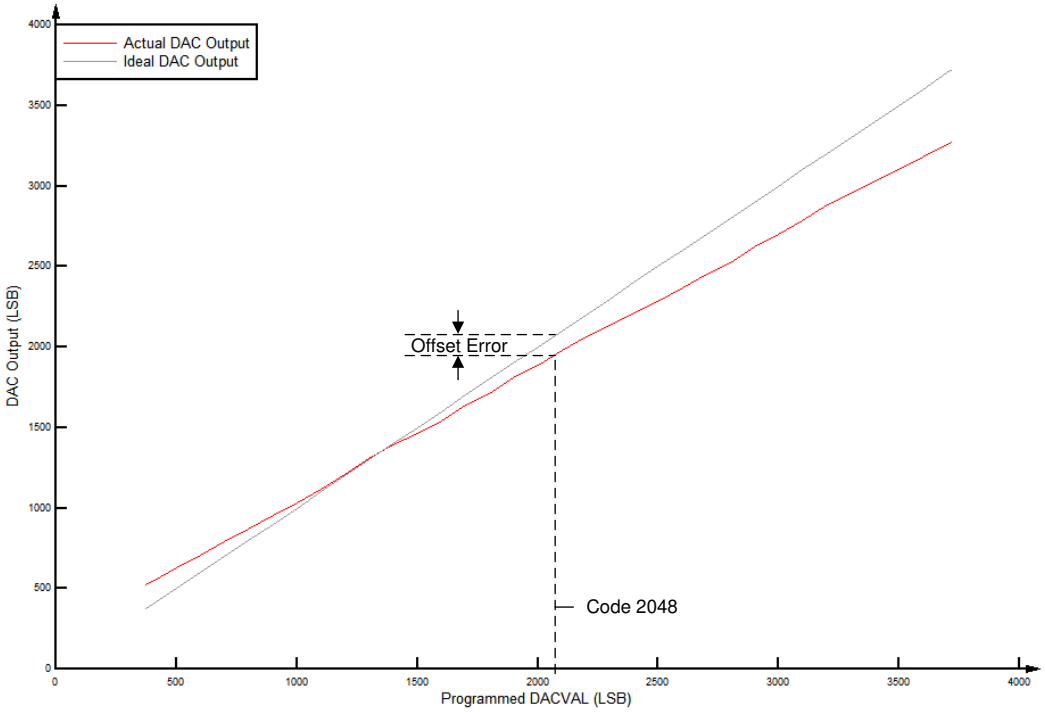

Figure 5-45. Buffered DAC Offset

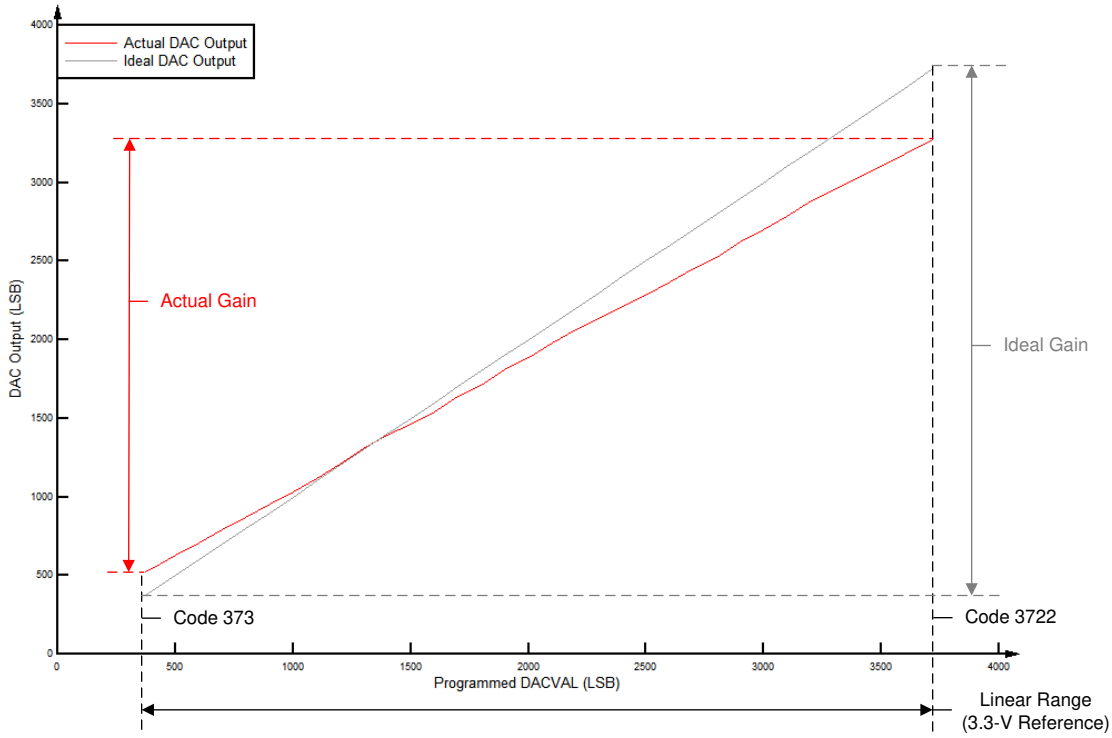

Figure 5-46. Buffered DAC Gain

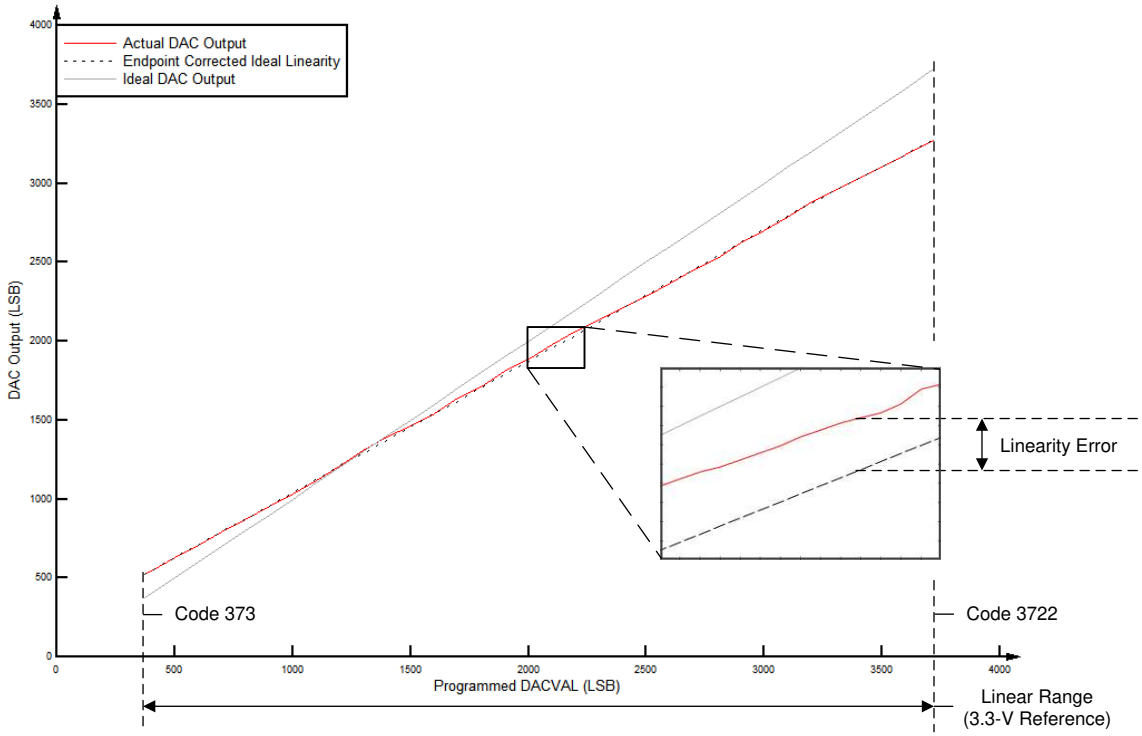

Figure 5-47. Buffered DAC Linearity

版权 © 2014–2020, Texas Instruments Incorporated

5.11 Control Peripherals

注

For the actual number of each peripheral on a specific device, see Table 3-1.

5.11.1 Enhanced Capture (eCAP)

The eCAP module can be used in systems where accurate timing of external events is important.

Applications for eCAP include:

- Speed measurements of rotating machinery (for example, toothed sprockets sensed through Hall sensors)
- Elapsed time measurements between position sensor pulses
- Period and duty cycle measurements of pulse train signals
- Decoding current or voltage amplitude derived from duty cycle encoded current/voltage sensors

The eCAP module includes the following features:

- 4-event time-stamp registers (each 32 bits)
- Edge-polarity selection for up to four sequenced time-stamp capture events
- Interrupt on either of the four events
- Single shot capture of up to four event timestamps
- Continuous mode capture of timestamps in a four-deep circular buffer
- Absolute time-stamp capture
- Difference (Delta) mode time-stamp capture
- All of the above resources dedicated to a single input pin
- When not used in capture mode, the eCAP module can be configured as a single-channel PWM output (APWM).

The eCAP inputs connect to any GPIO input through the Input X-BAR. The APWM outputs connect to GPIO pins through the Output X-BAR to OUTPUTx positions in the GPIO mux. See Section 4.4.2 and Section 4.4.3.

图 5-48 shows the block diagram of an eCAP module.

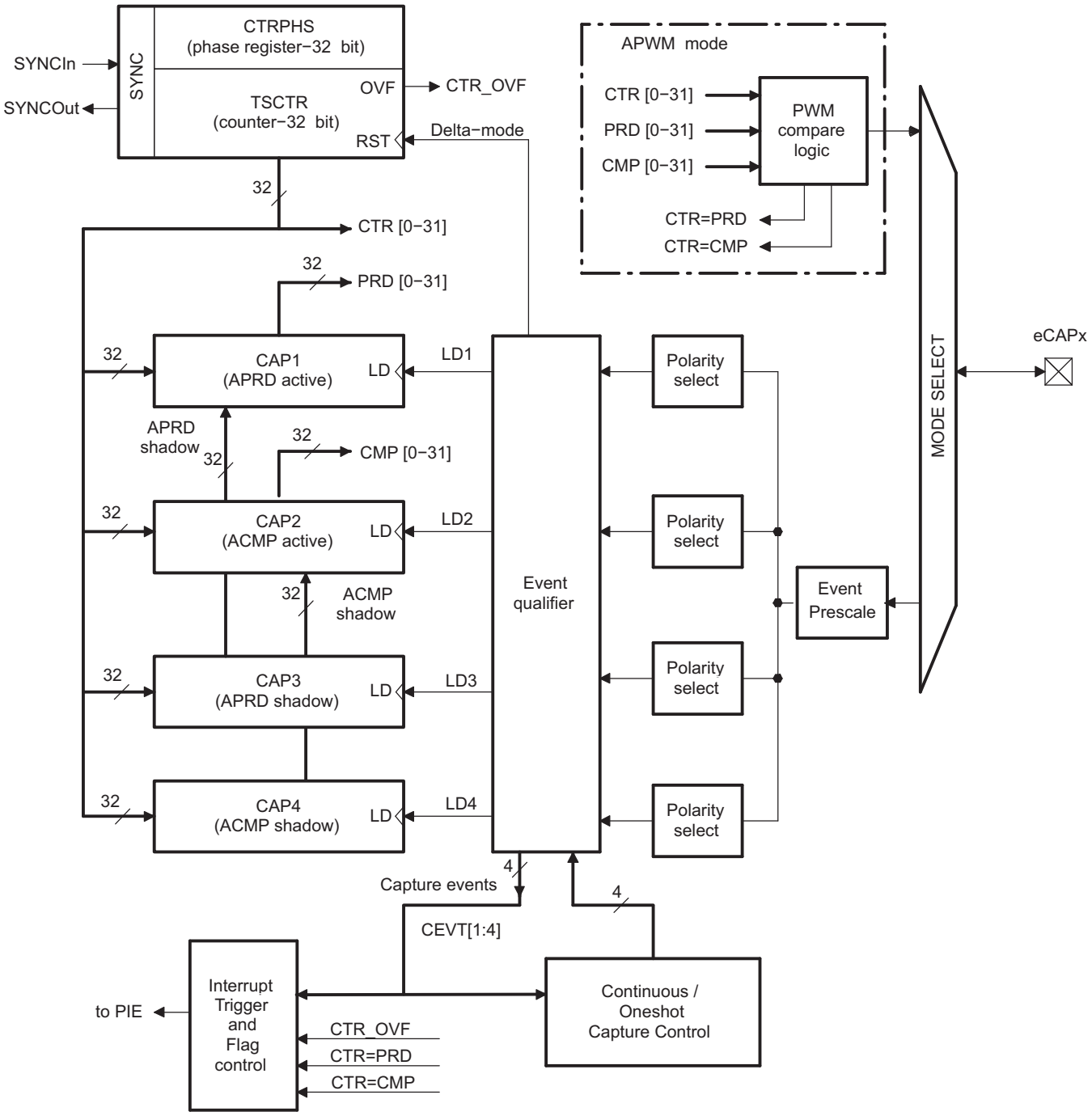

图 5-48. eCAP Block Diagram

The eCAP module is clocked by PERx.SYSCLK.

The clock enable bits (ECAP1–ECAP6) in the PCLKCR3 register turn off the eCAP module individually (for low-power operation). Upon reset, ECAP1ENCLK is set to low, indicating that the peripheral clock is off.

版权 © 2014–2020, Texas Instruments Incorporated

5.11.1.1 eCAP Electrical Data and Timing

Table 5-57 shows the eCAP timing requirement and Table 5-58 shows the eCAP switching characteristics.

Table 5-57. eCAP Timing Requirement(1)

		MIN	MAX	UNIT
$t_{w(CAP)}$ Capture input pulse width	Asynchronous	$2t_{c(SYSCLK)}$		cycles
	Synchronous	$2t_{c(SYSCLK)}$		cycles
	With input qualifier	$1t_{c(SYSCLK)} + t_{w(IQSW)}$		cycles

(1) For an explanation of the input qualifier parameters, see Table 5-24.

Table 5-58. eCAP Switching Characteristics

over recommended operating conditions (unless otherwise noted)

PARAMETER		MIN	MAX	UNIT
$t_{w(APWM)}$	Pulse duration, APWMx output high/low	20		ns

5.11.2 Enhanced Pulse Width Modulator (ePWM)

The ePWM peripheral is a key element in controlling many of the power electronic systems found in both commercial and industrial equipment. The ePWM type-4 module is able to generate complex pulse width waveforms with minimal CPU overhead by building the peripheral up from smaller modules with separate resources that can operate together to form a system. Some of the highlights of the ePWM type-4 module include complex waveform generation, dead-band generation, a flexible synchronization scheme, advanced trip-zone functionality, and global register reload capabilities.

图 5-49 shows the signal interconnections with the ePWM. 图 5-50 shows the ePWM trip input connectivity.

版权 © 2014–2020, Texas Instruments Incorporated

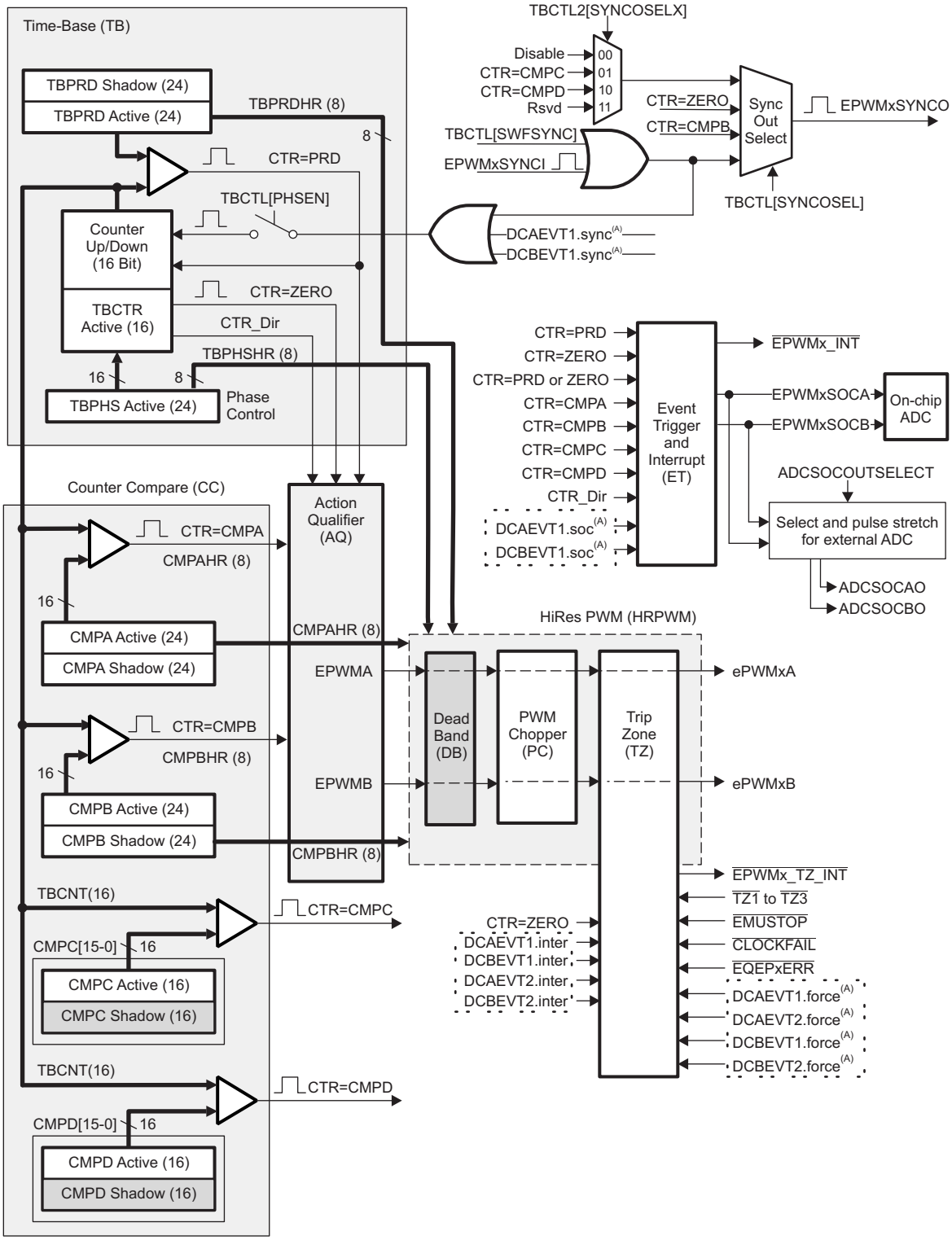

Copyright © 2017, Texas Instruments Incorporated

A. These events are generated by the ePWM digital compare (DC) submodule based on the levels of the TRIPIN inputs.

图 5-49. ePWM Submodules and Critical Internal Signal Interconnects

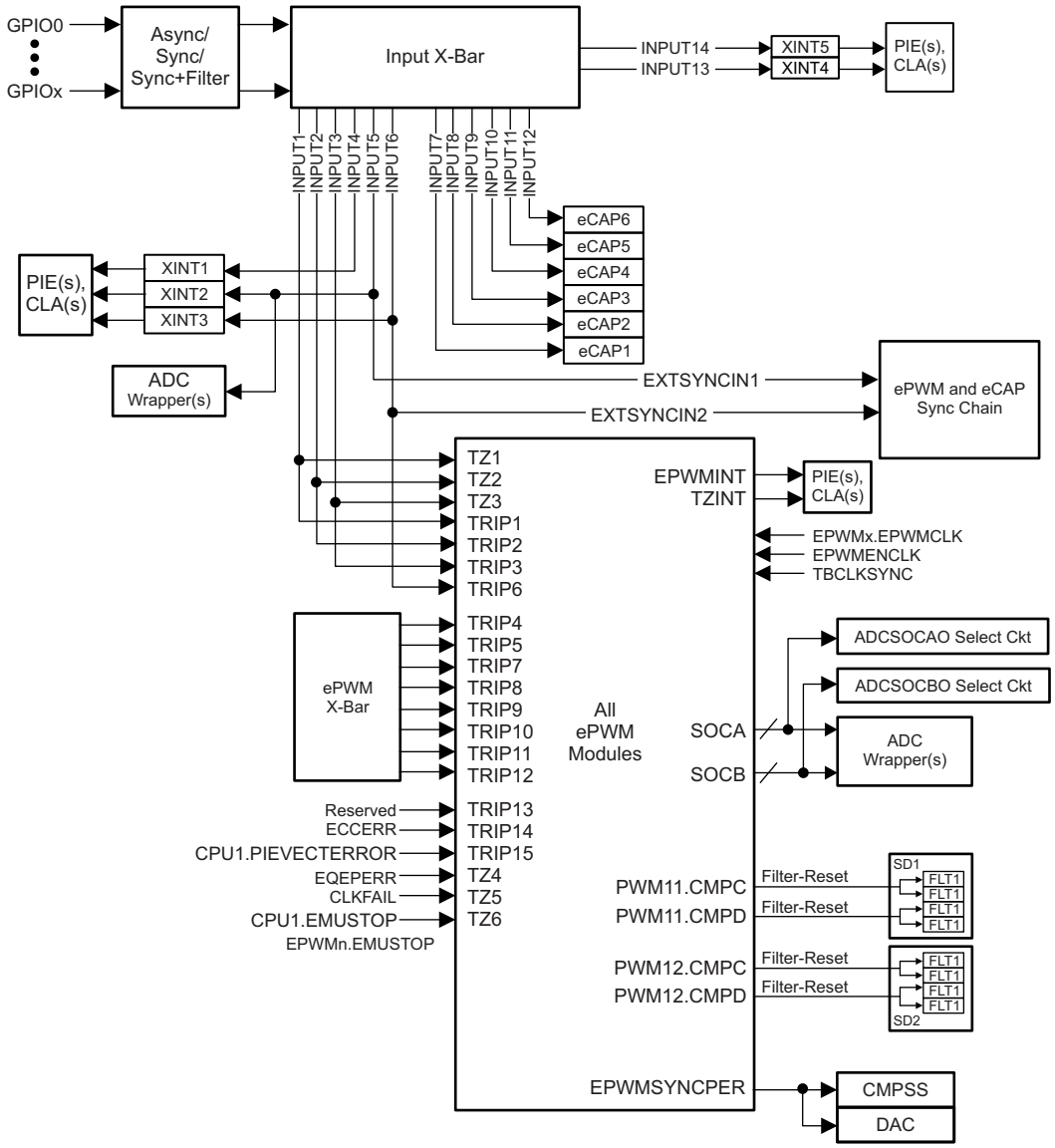

图 5-50. ePWM Trip Input Connectivity

版权 © 2014–2020, Texas Instruments Incorporated

5.11.2.1 Control Peripherals Synchronization

The ePWM and eCAP synchronization chain allows synchronization between multiple modules for the system. 图 5-51 shows the synchronization chain architecture.

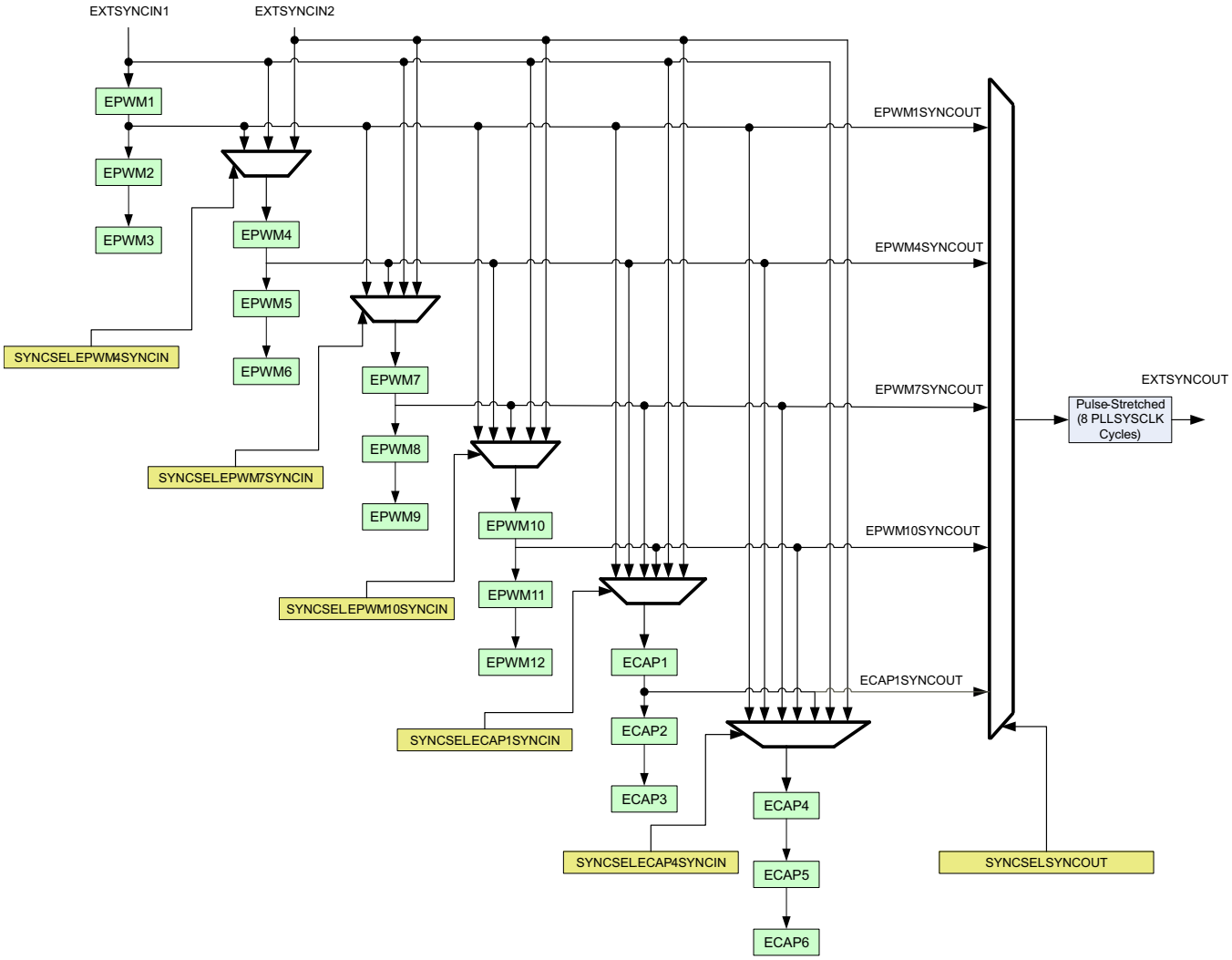

图 5-51. Synchronization Chain Architecture

5.11.2.2 ePWM Electrical Data and Timing

Table 5-59 shows the PWM timing requirements and Table 5-60 shows the PWM switching characteristics.

Table 5-59. ePWM Timing Requirements(1)

			MIN	MAX	UNIT
$f_{(EPWM)}$	Frequency, EPWMCLK(2)			100	MHz
$t_{w(SYNCIN)}$	Sync input pulse width	Asynchronous	$2t_{c(EPWMCLK)}$		cycles
		Synchronous	$2t_{c(EPWMCLK)}$		cycles
		With input qualifier	$1t_{c(EPWMCLK)} + t_{w(IQSW)}$		cycles

(1) For an explanation of the input qualifier parameters, see Table 5-24.
(2) For SYSCLK above 100 MHz, the EPWMCLK must be half of SYSCLK.

Table 5-60. ePWM Switching Characteristics

over recommended operating conditions (unless otherwise noted)

PARAMETER		MIN	MAX	UNIT
$t_{w(PWM)}$	Pulse duration, PWMx output high/low	20		ns
$t_{w(SYNCOUT)}$	Sync output pulse width	$8t_{c(SYSCLK)}$		cycles
$t_{d(TZ-PWM)}$	Delay time, trip input active to PWM forced high Delay time, trip input active to PWM forced low Delay time, trip input active to PWM Hi-Z		25	ns

5.11.2.2.1 Trip-Zone Input Timing

Table 5-61 shows the trip-zone input timing requirements. Figure 5-52 shows the PWM Hi-Z characteristics.

Table 5-61. Trip-Zone Input Timing Requirements(1)

		MIN	MAX	UNIT
$t_{w(TZ)}$ Pulse duration, $\overline{TZx}$ input low	Asynchronous	$1t_{c(EPWMCLK)}$		cycles
	Synchronous	$2t_{c(EPWMCLK)}$		cycles
	With input qualifier	$1t_{c(EPWMCLK)} + t_{w(IQSW)}$		cycles

(1) For an explanation of the input qualifier parameters, see Table 5-24.

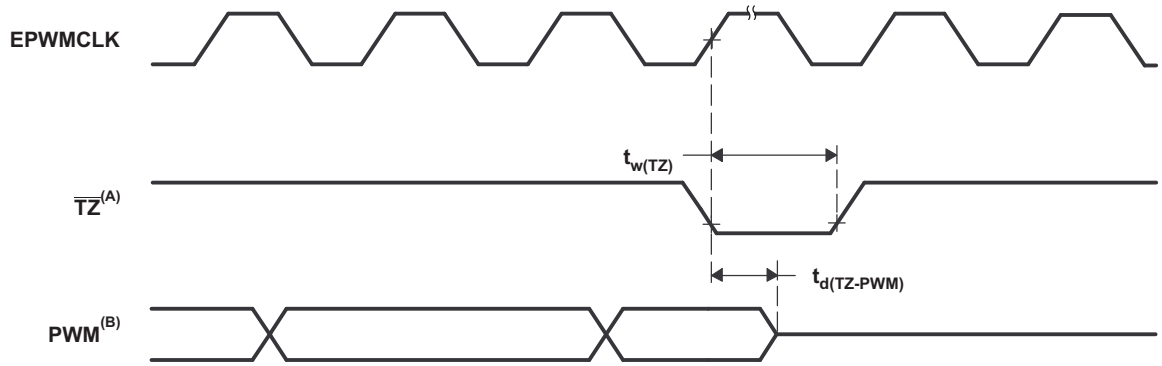

A. $\overline{TZ}$: $\overline{TZ1}$, $\overline{TZ2}$, $\overline{TZ3}$, TRIP1–TRIP12
B. PWM refers to all the PWM pins in the device. The state of the PWM pins after $\overline{TZ}$ is taken high depends on the PWM recovery software.

Figure 5-52. PWM Hi-Z Characteristics

版权 © 2014–2020, Texas Instruments Incorporated

5.11.2.3 External ADC Start-of-Conversion Electrical Data and Timing

表 5-62 shows the external ADC start-of-conversion switching characteristics. 图 5-53 shows the $\overline{\text{ADCSOCAO}}$ or $\overline{\text{ADCSOCBO}}$ timing.

表 5-62. External ADC Start-of-Conversion Switching Characteristics

over recommended operating conditions (unless otherwise noted)

PARAMETER		MIN	MAX	UNIT
$t_{w(ADCSOCL)}$	Pulse duration, $\overline{\text{ADCSOCxO}}$ low	$32t_{c(SYSCLK)}$		cycles

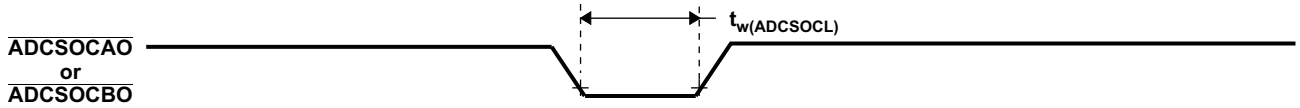

图 5-53. $\overline{\text{ADCSOCAO}}$ or $\overline{\text{ADCSOCBO}}$ Timing

5.11.3 Enhanced Quadrature Encoder Pulse (eQEP)

The eQEP module interfaces directly with linear or rotary incremental encoders to obtain position, direction, and speed information from rotating machines used in high-performance motion and position-control systems.

Each eQEP peripheral comprises five major functional blocks:

- Quadrature Capture Unit (QCAP)
- Position Counter/Control Unit (PCCU)
- Quadrature Decoder Unit (QDU)
- Unit Time Base for speed and frequency measurement (UTIME)
- Watchdog timer for detecting stalls (QWDOG)

The eQEP peripherals are clocked by PERx.SYSCLK. 图 5-54 shows the eQEP block diagram.

版权 © 2014–2020, Texas Instruments Incorporated

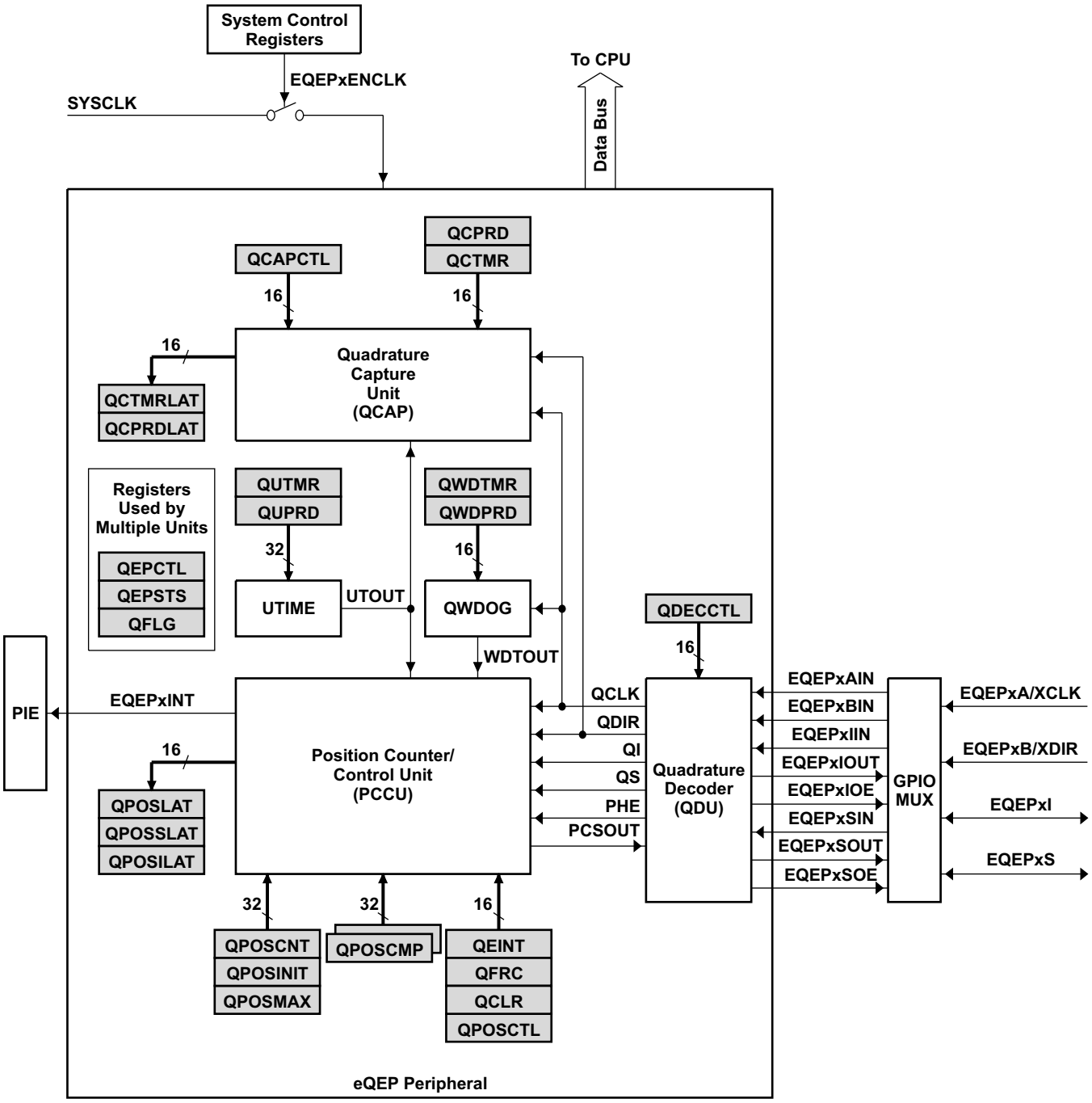

图 5-54. eQEP Block Diagram

5.11.3.1 eQEP Electrical Data and Timing

Table 5-63 lists the eQEP timing requirement and Table 5-64 lists the eQEP switching characteristics.

Table 5-63. eQEP Timing Requirements(1)

			MIN	MAX	UNIT
$t_{w(QEPP)}$	QEP input period	Asynchronous(2)/Synchronous	$2t_{c(SYSCLK)}$		cycles
		With input qualifier	$2[1t_{c(SYSCLK)} + t_{w(IQSW)}]$		cycles
$t_{w(INDEXH)}$	QEP Index Input High time	Asynchronous(2)/Synchronous	$2t_{c(SYSCLK)}$		cycles
		With input qualifier	$2t_{c(SYSCLK)} + t_{w(IQSW)}$		cycles
$t_{w(INDEXL)}$	QEP Index Input Low time	Asynchronous(2)/Synchronous	$2t_{c(SYSCLK)}$		cycles
		With input qualifier	$2t_{c(SYSCLK)} + t_{w(IQSW)}$		cycles
$t_{w(STROBH)}$	QEP Strobe High time	Asynchronous(2)/Synchronous	$2t_{c(SYSCLK)}$		cycles
		With input qualifier	$2t_{c(SYSCLK)} + t_{w(IQSW)}$		cycles
$t_{w(STROBL)}$	QEP Strobe Input Low time	Asynchronous(2)/Synchronous	$2t_{c(SYSCLK)}$		cycles
		With input qualifier	$2t_{c(SYSCLK)} + t_{w(IQSW)}$		cycles

(1) For an explanation of the input qualifier parameters, see Table 5-24.
(2) See the *TMS320F2837xS MCUs Silicon Errata* for limitations in the asynchronous mode.

Table 5-64. eQEP Switching Characteristics

over recommended operating conditions (unless otherwise noted)

PARAMETER		MIN	MAX	UNIT
$t_{d(CNTR)xin}$	Delay time, external clock to counter increment		$4t_{c(SYSCLK)}$	cycles
$t_{d(PCS\text{-}OUT)QEP}$	Delay time, QEP input edge to position compare sync output		$6t_{c(SYSCLK)}$	cycles

版权 © 2014–2020, Texas Instruments Incorporated

5.11.4 High-Resolution Pulse Width Modulator (HRPWM)

The HRPWM combines multiple delay lines in a single module and a simplified calibration system by using a dedicated calibration delay line. For each ePWM module, there are two HR outputs:

- HR Duty and Deadband control on Channel A
- HR Duty and Deadband control on Channel B

The HRPWM module offers PWM resolution (time granularity) that is significantly better than what can be achieved using conventionally derived digital PWM methods. The key points for the HRPWM module are:

- Significantly extends the time resolution capabilities of conventionally derived digital PWM
- This capability can be used in both single edge (duty cycle and phase-shift control) as well as dual edge control for frequency/period modulation.
- Finer time granularity control or edge positioning is controlled through extensions to the Compare A, B, phase, period and deadband registers of the ePWM module.

注

The minimum HRPWMCLK frequency allowed for HRPWM is 60 MHz.

5.11.4.1 HRPWM Electrical Data and Timing

Table 5-65 lists the high-resolution PWM timing requirements. Table 5-66 lists the high-resolution PWM switching characteristics.

Table 5-65. High-Resolution PWM Timing Requirements

		MIN	MAX	UNIT
$f_{(EPWM)}$	Frequency, EPWMCLK (1)		100	MHz
$f_{(HRPWM)}$	Frequency, HRPWMCLK	60	100	MHz

(1) For SYSCLK above 100 MHz, the EPWMCLK must be half of SYSCLK.

Table 5-66. High-Resolution PWM Characteristics

PARAMETER	MIN	TYP	MAX	UNIT
Micro Edge Positioning (MEP) step size (1)		150	310	ps

(1) The MEP step size will be largest at high temperature and minimum voltage on V_{DD}. MEP step size will increase with higher temperature and lower voltage and decrease with lower temperature and higher voltage.
Applications that use the HRPWM feature should use MEP Scale Factor Optimizer (SFO) estimation software functions. See the TI software libraries for details of using SFO functions in end applications. SFO functions help to estimate the number of MEP steps per SYSCLK period dynamically while the HRPWM is in operation.

5.11.5 Sigma-Delta Filter Module (SDFM)

The SDFM is a four-channel digital filter designed specifically for current measurement and resolver position decoding in motor control applications. Each channel can receive an independent sigma-delta (ΣΔ) modulated bit stream. The bit streams are processed by four individually programmable digital decimation filters. The filter set includes a fast comparator for immediate digital threshold comparisons for overcurrent and undercurrent monitoring. 图 5-55 shows a block diagram of the SDFMs.

SDFM features include:

- Eight external pins per SDFM module:
  - Four sigma-delta data input pins per SDFM module (SDx_Dy, where x = 1 to 2 and y = 1 to 4)
  - Four sigma-delta clock input pins per SDFM module (SDx_Cy, where x = 1 to 2 and y = 1 to 4)
- Four different configurable modulator clock modes:
  - Modulator clock rate equals modulator data rate
  - Modulator clock rate running at half the modulator data rate
  - Modulator data is Manchester encoded. Modulator clock not required.
  - Modulator clock rate is double that of modulator data rate
- Four independent configurable comparator units:
  - Four different filter type selection (Sinc1/Sinc2/Sincfast/Sinc3) options available
  - Ability to detect over-value and under-value conditions
  - Comparator Over-Sampling Ratio (COSR) value for comparator programmable from 1 to 32
- Four independent configurable data filter units:
  - Four different filter type selection (Sinc1/Sinc2/Sincfast/Sinc3) options available
  - Data filter Over-Sampling Ratio (DOSR) value for data filter unit programmable from 1 to 256
  - Ability to enable or disable individual filter module
  - Ability to synchronize all four independent filters of a SDFM module using the Master Filter Enable (MFE) bit or the PWM signals.
- Filter data can be 16-bit or 32-bit representation
- PWMs can be used to generate modulator clock for sigma-delta modulators

版权 © 2014–2020, Texas Instruments Incorporated

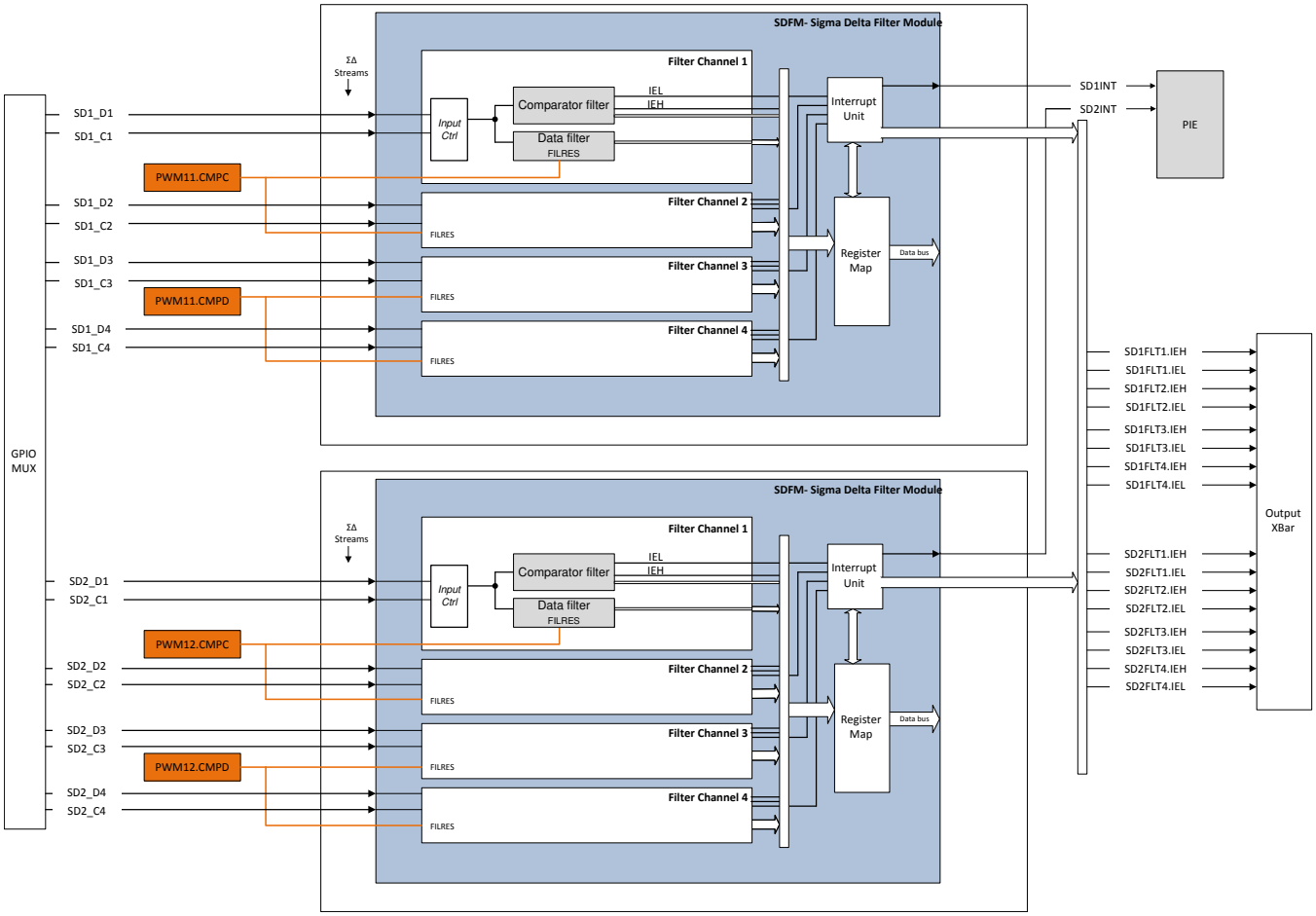

图 5-55. SDFM Block Diagram

5.11.5.1 SDFM Electrical Data and Timing (Using ASYNC)

SDFM operation with asynchronous GPIO is defined by setting GPyQSELn = 0b11. Table 5-67 lists the SDFM timing requirements when using the asynchronous GPIO (ASYNC) option. Figure 5-56 through Figure 5-59 show the SDFM timing diagrams.

Table 5-67. SDFM Timing Requirements When Using Asynchronous GPIO (ASYNC) Option

		MIN	MAX	UNIT
Mode 0				
$t_{c(SDC)M0}$	Cycle time, SDx_Cy	40	256 * SYSCLK period	ns
$t_{w(SDCH)M0}$	Pulse duration, SDx_Cy high	10	$t_{c(SDC)M0}$ – 10	ns
$t_{su(SDDV-SDCH)M0}$	Setup time, SDx_Dy valid before SDx_Cy goes high	5		ns
$t_{h(SDCH-SDD)M0}$	Hold time, SDx_Dy wait after SDx_Cy goes high	5		ns
Mode 1				
$t_{c(SDC)M1}$	Cycle time, SDx_Cy	80	256 * SYSCLK period	ns
$t_{w(SDCH)M1}$	Pulse duration, SDx_Cy high	10	$t_{c(SDC)M1}$ – 10	ns
$t_{su(SDDV-SDCL)M1}$	Setup time, SDx_Dy valid before SDx_Cy goes low	5		ns
$t_{su(SDDV-SDCH)M1}$	Setup time, SDx_Dy valid before SDx_Cy goes high	5		ns
$t_{h(SDCL-SDD)M1}$	Hold time, SDx_Dy wait after SDx_Cy goes low	5		ns
$t_{h(SDCH-SDD)M1}$	Hold time, SDx_Dy wait after SDx_Cy goes high	5		ns
Mode 2				
$t_{c(SDD)M2}$	Cycle time, SDx_Dy	8 * $t_{c(SYSCLK)}$	20 * $t_{c(SYSCLK)}$	ns
$t_{w(SDDH)M2}$	Pulse duration, SDx_Dy high	10		ns
Mode 3				
$t_{c(SDC)M3}$	Cycle time, SDx_Cy	40	256 * SYSCLK period	ns
$t_{w(SDCH)M3}$	Pulse duration, SDx_Cy high	10	$t_{c(SDC)M3}$ – 5	ns
$t_{su(SDDV-SDCH)M3}$	Setup time, SDx_Dy valid before SDx_Cy goes high	5		ns
$t_{h(SDCH-SDD)M3}$	Hold time, SDx_Dy wait after SDx_Cy goes high	5		ns

NOTE

The SDFM clock inputs (SDx_Cy pins) directly clock the SDFM module when there is no GPIO input synchronization. Any glitches or ringing noise on these inputs can corrupt the SDFM module operation. Special precautions should be taken on these signals to ensure a clean and noise-free signal that meets SDFM timing requirements. Precautions such as series termination for ringing due to any impedance mismatch of the clock driver and spacing of traces from other noisy signals are recommended.

Copyright © 2014–2020, Texas Instruments Incorporated

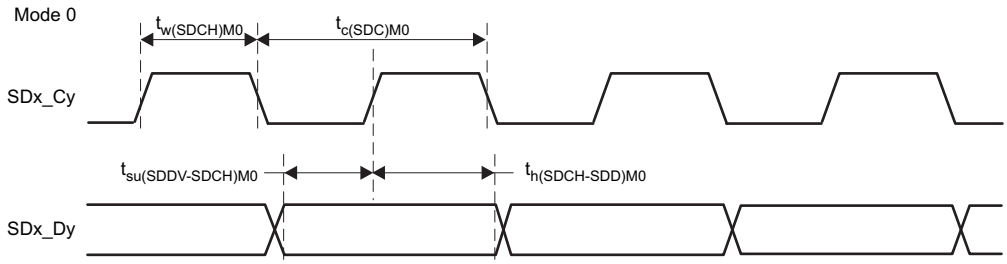

Figure 5-56. SDFM Timing Diagram – Mode 0

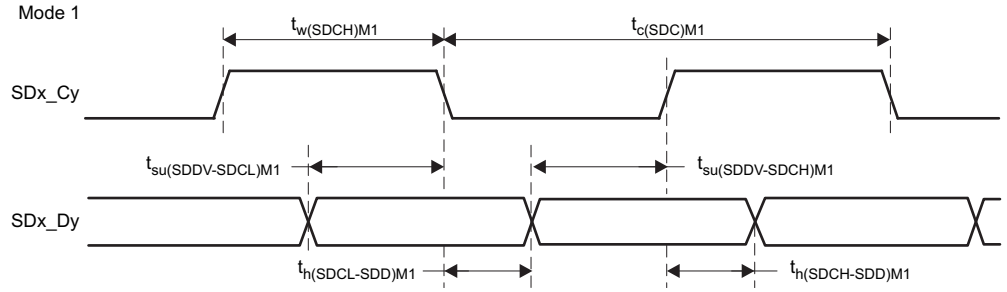

Figure 5-57. SDFM Timing Diagram – Mode 1

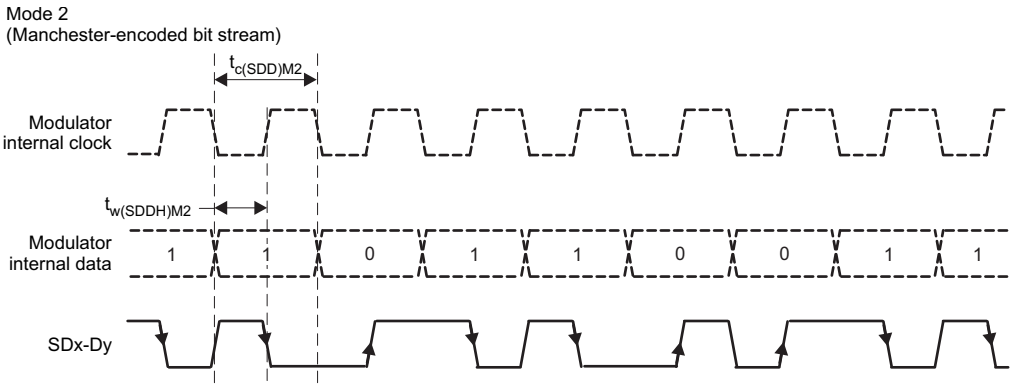

Figure 5-58. SDFM Timing Diagram – Mode 2

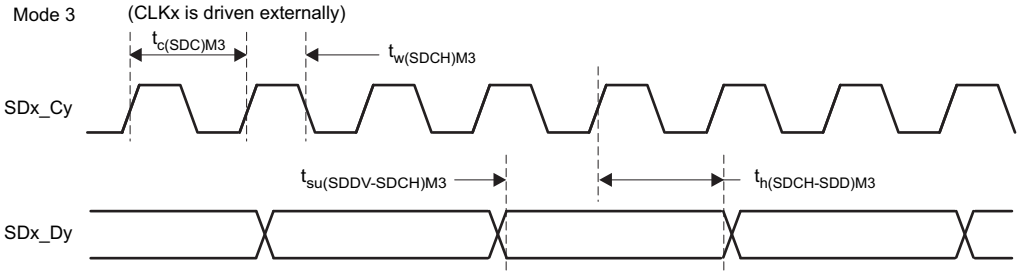

Figure 5-59. SDFM Timing Diagram – Mode 3

5.11.5.2 SDFM Electrical Data and Timing (Using 3-Sample GPIO Input Qualification)

SDFM operation with qualified GPIO (3-sample window) is defined by setting GPyQSELn = 0b01. When using this qualified GPIO (3-sample window) mode, the timing requirement for the $t_{w(GPI)}$ pulse duration of $2t_{c(SYSCLK)}$ must be met. It is important for both SD-Cx and SD-Dx pairs to be configured with the same GPIO qualification option. Table 5-68 lists the SDFM timing requirements when using the GPIO input qualification (3-sample window) option. Figure 5-56 through Figure 5-59 show the SDFM timing diagrams.

Table 5-68. SDFM Timing Requirements When Using GPIO Input Qualification (3-Sample Window(1)) Option

		MIN	MAX	UNIT
Mode 0				
$t_{c(SDC)M0}$	Cycle time, SDx_Cy	10 * SYSCLK period	256 * SYSCLK period	ns
$t_{w(SDCHL)M0}$	Pulse duration, SDx_Cy high/low	4 * SYSCLK period	6 * SYSCLK period	ns
$t_{w(SDDHL)M0}$	Pulse duration, SDx_Dy high/low	4 * SYSCLK period		ns
$t_{su(SDDV-SDCH)M0}$	Setup time, SDx_Dy valid before SDx_Cy goes high	2 * SYSCLK period		ns
$t_{h(SDCH-SDD)M0}$	Hold time, SDx_Dy wait after SDx_Cy goes high	2 * SYSCLK period		ns
Mode 1				
$t_{c(SDC)M1}$	Cycle time, SDx_Cy	20 * SYSCLK period	256 * SYSCLK period	ns
$t_{w(SDCH)M1}$	Pulse duration, SDx_Cy high	4 * SYSCLK period	6 * SYSCLK period	ns
$t_{w(SDDHL)M1}$	Pulse duration, SDx_Dy high/low	4 * SYSCLK period		ns
$t_{su(SDDV-SDCL)M1}$	Setup time, SDx_Dy valid before SDx_Cy goes low	2 * SYSCLK period		ns
$t_{su(SDDV-SDCH)M1}$	Setup time, SDx_Dy valid before SDx_Cy goes high	2 * SYSCLK period		ns
$t_{h(SDCL-SDD)M1}$	Hold time, SDx_Dy wait after SDx_Cy goes low	2 * SYSCLK period		ns
$t_{h(SDCH-SDD)M1}$	Hold time, SDx_Dy wait after SDx_Cy goes high	2 * SYSCLK period		ns
Mode 2				
$t_{c(SDD)M2}$	Cycle time, SDx_Dy	Option unavailable		
$t_{w(SDDH)M2}$	Pulse duration, SDx_Dy high			
Mode 3				
$t_{c(SDC)M3}$	Cycle time, SDx_Cy	10 * SYSCLK period	256 * SYSCLK period	ns
$t_{w(SDCHL)M3}$	Pulse duration, SDx_Cy high	4 * SYSCLK period	6 * SYSCLK period	ns
$t_{w(SDDHL)M3}$	Pulse duration, SDx_Dy high/low	4 * SYSCLK period		ns
$t_{su(SDDV-SDCH)M3}$	Setup time, SDx_Dy valid before SDx_Cy goes high	2 * SYSCLK period		ns
$t_{h(SDCH-SDD)M3}$	Hold time, SDx_Dy wait after SDx_Cy goes high	2 * SYSCLK period		ns

(1) SDFM timing requirements apply only when the GPIO input qualification type is the 3-sample window (GPyQSELx = 1; QUALPRD = 0) option. It is important that both the SD-Cx and SD-Dx pairs be configured with the 3-sample window option.

NOTE

The SDFM Qualified GPIO (3-sample) mode provides protection against SDFM module corruption due to occasional random noise glitches on the SDx_Cy pin that may result in a false comparator trip and filter output. For more details, refer to the "SDFM: Use Caution While Using SDFM Under Noisy Conditions" usage note in the *TMS320F2837xS MCUs Silicon Errata*.

The SDFM Qualified GPIO (3-sample) mode does not provide protection against persistent violations of the above timing requirements. Timing violations will result in data corruption proportional to the number of bits which violate the requirements.

版权 © 2014–2020, Texas Instruments Incorporated

5.12 Communications Peripherals

注

For the actual number of each peripheral on a specific device, see Table 3-1.

5.12.1 Controller Area Network (CAN)

The CAN module performs CAN protocol communication according to ISO 11898-1 (identical to Bosch® CAN protocol specification 2.0 A, B). The bit rate can be programmed to values up to 1 Mbps. A CAN transceiver chip is required for the connection to the physical layer (CAN bus).

For communication on a CAN network, individual message objects can be configured. The message objects and identifier masks are stored in the Message RAM.

All functions concerning the handling of messages are implemented in the message handler. These functions are: acceptance filtering; the transfer of messages between the CAN Core and the Message RAM; and the handling of transmission requests.

The register set of the CAN may be accessed directly by the CPU through the module interface. These registers are used to control and configure the CAN core and the message handler, and to access the message RAM.

The CAN module implements the following features:

- Complies with ISO11898-1 (Bosch® CAN protocol specification 2.0 A and B)
- Bit rates up to 1 Mbps
- Multiple clock sources
- 32 message objects (“message objects” are also referred to as “mailboxes” in this document; the two terms are used interchangeably), each with the following properties:
  - Configurable as receive or transmit
  - Configurable with standard (11-bit) or extended (29-bit) identifier
  - Supports programmable identifier receive mask
  - Supports data and remote frames
  - Holds 0 to 8 bytes of data
  - Parity-checked configuration and data RAM
- Individual identifier mask for each message object
- Programmable FIFO mode for message objects
- Programmable loop-back modes for self-test operation
- Suspend mode for debug support
- Software module reset
- Automatic bus-on, after bus-off state by a programmable 32-bit timer
- Message-RAM parity-check mechanism
- Two interrupt lines

注

For a CAN bit clock of 200 MHz, the smallest bit rate possible is 7.8125 kbps.

注

Depending on the timing settings used, the accuracy of the on-chip zero-pin oscillator (specified in the data manual) may not meet the requirements of the CAN protocol. In this situation, an external clock source must be used.

图 5-60 shows the CAN block diagram.

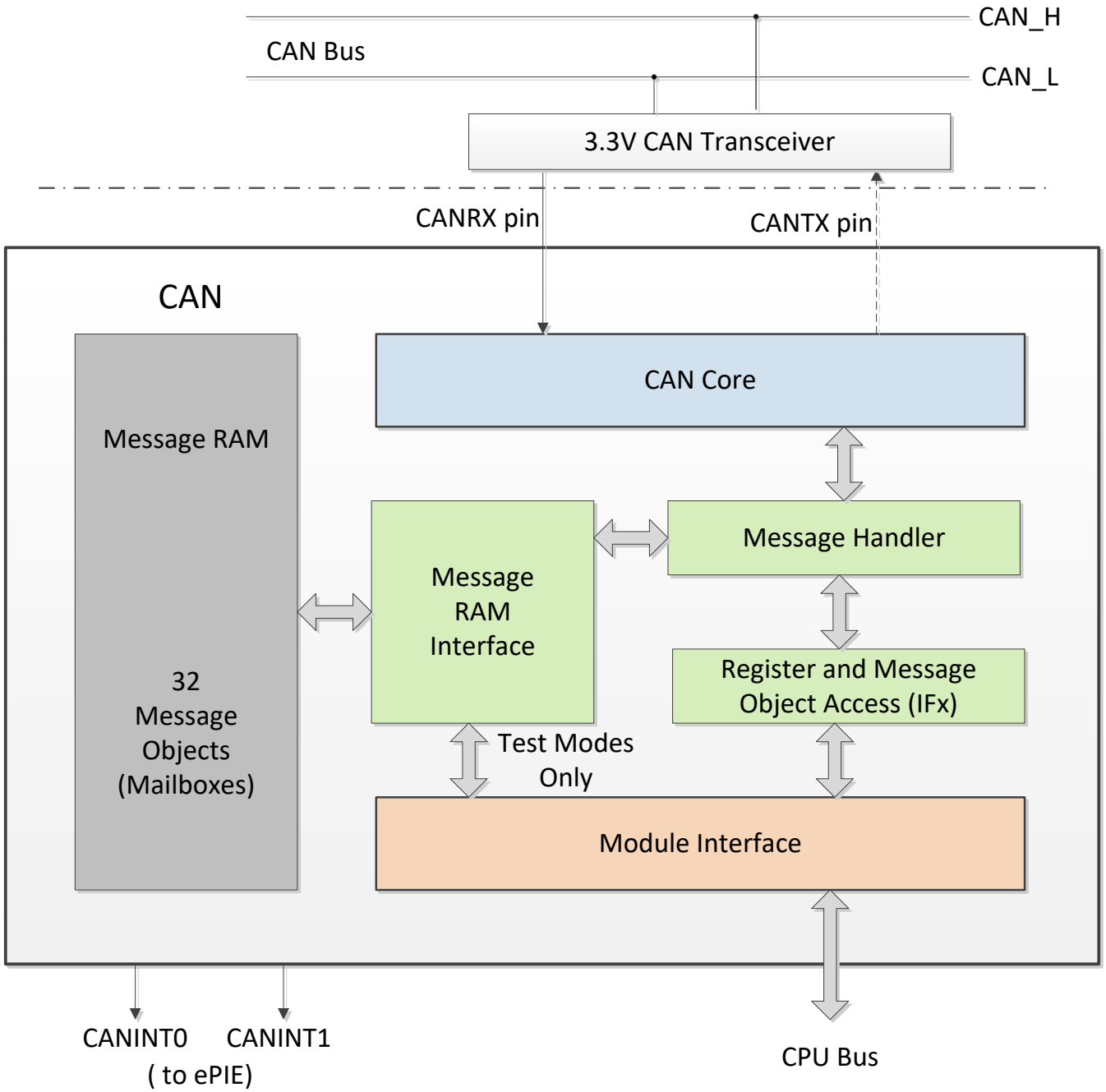

图 5-60. CAN Block Diagram

版权 © 2014–2020, Texas Instruments Incorporated

5.12.2 Inter-Integrated Circuit (I2C)

The I2C module has the following features:

- Compliance with the Philips Semiconductors I^2C-bus specification (version 2.1):
  - Support for 1-bit to 8-bit format transfers
  - 7-bit and 10-bit addressing modes
  - General call
  - START byte mode
  - Support for multiple master-transmitters and slave-receivers
  - Support for multiple slave-transmitters and master-receivers
  - Combined master transmit/receive and receive/transmit mode
  - Data transfer rate of from 10 kbps up to 400 kbps (I2C Fast-mode rate)
- One 16-byte receive FIFO and one 16-byte transmit FIFO
- One interrupt that can be used by the CPU. This interrupt can be generated as a result of one of the following conditions:
  - Transmit-data ready
  - Receive-data ready
  - Register-access ready
  - No-acknowledgment received
  - Arbitration lost
  - Stop condition detected
  - Addressed as slave
- An additional interrupt that can be used by the CPU when in FIFO mode
- Module enable/disable capability
- Free data format mode

图 5-61 shows how the I2C peripheral module interfaces within the device.

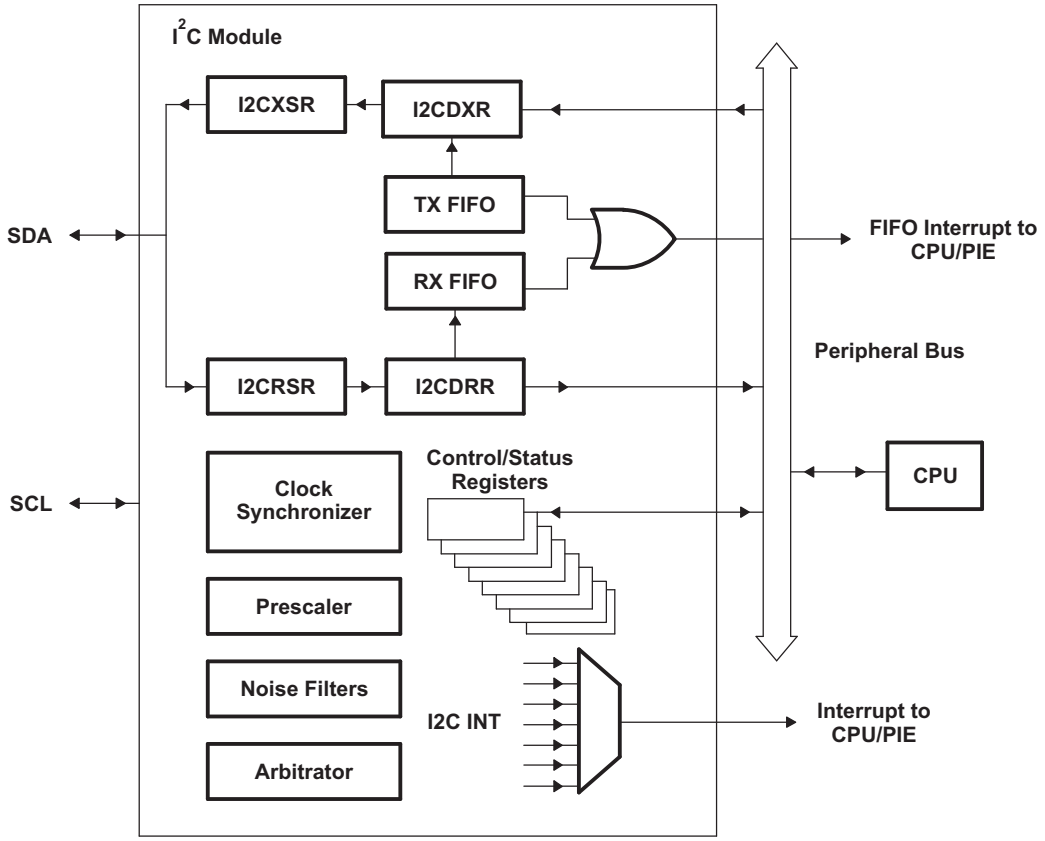

图 5-61. I2C Peripheral Module Interfaces

版权 © 2014–2020, Texas Instruments Incorporated

5.12.2.1 I2C Electrical Data and Timing

Table 5-69 shows the I2C timing requirements. Table 5-70 shows the I2C switching characteristics.

Table 5-69. I2C Timing Requirements

			MIN	MAX	UNIT
$t_{h(SDA-SCL)START}$	Hold time, START condition, SCL fall delay after SDA fall		0.6		µs
$t_{su(SCL-SDA)START}$	Setup time, Repeated START, SCL rise before SDA fall delay		0.6		µs
$t_{h(SCL-DAT)}$	Hold time, data after SCL fall		0		µs
$t_{su(DAT-SCL)}$	Setup time, data before SCL rise		100		ns
$t_{r(SDA)}$	Rise time, SDA	Input tolerance	20	300	ns
$t_{r(SCL)}$	Rise time, SCL	Input tolerance	20	300	ns
$t_{f(SDA)}$	Fall time, SDA	Input tolerance	11.4	300	ns
$t_{f(SCL)}$	Fall time, SCL	Input tolerance	11.4	300	ns
$t_{su(SCL-SDA)STOP}$	Setup time, STOP condition, SCL rise before SDA rise delay		0.6		µs

Table 5-70. I2C Switching Characteristics

over recommended operating conditions (unless otherwise noted)

PARAMETER		TEST CONDITIONS	MIN	MAX	UNIT
f_{SCL}	SCL clock frequency		0	400	kHz
$t_{w(SCLL)}$	Pulse duration, SCL clock low		1.3		µs
$t_{w(SCLH)}$	Pulse duration, SCL clock high		0.6		µs
$t_{w(SP)}$	Pulse duration of spikes that will be suppressed by the input filter		0	50	ns
t_{BUF}	Bus free time between STOP and START conditions		1.3		µs
$t_{v(SCL-DAT)}$	Valid time, data after SCL fall			0.9	µs
$t_{v(SCL-ACK)}$	Valid time, Acknowledge after SCL fall			0.9	µs
V_{IL}	Valid low-level input voltage		–0.3	$0.3 * V_{DDIO}$	V
V_{IH}	Valid high-level input voltage		$0.7 * V_{DDIO}$	$V_{DDIO} + 0.3$	V
V_{OL}	Low-level output voltage	Sinking 3 mA	0	0.4	V
I_I	Input current on pins	$0.1\ V_{bus} < V_i < 0.9\ V_{bus}$	–10	10	µA

NOTE

To meet all of the I2C protocol timing specifications, the I2C module clock must be configured from 7 MHz to 12 MHz.

5.12.3 Multichannel Buffered Serial Port (McBSP)

The McBSP module has the following features:

- Compatible with McBSP in TMS320C28x and TMS320F28x DSP devices
- Full-duplex communication
- Double-buffered data registers that allow a continuous data stream
- Independent framing and clocking for receive and transmit
- External shift clock generation or an internal programmable frequency shift clock
- 8-bit data transfer mode can be configured to transmit with LSB or MSB first
- Programmable polarity for both frame synchronization and data clocks
- Highly programmable internal clock and frame generation
- Direct interface to industry-standard CODECs, Analog Interface Chips (AICs), and other serially connected A/D and D/A devices
- Supports AC97, I2S, and SPI protocols
- McBSP clock rate,

$$CLKG = \frac{CLKSRG}{(1 + CLKGDV)}$$

where CLKSRG source could be LSPCLK, CLKX, or CLKR.

版权 © 2014–2020, Texas Instruments Incorporated

图 5-62 shows the block diagram of the McBSP module.

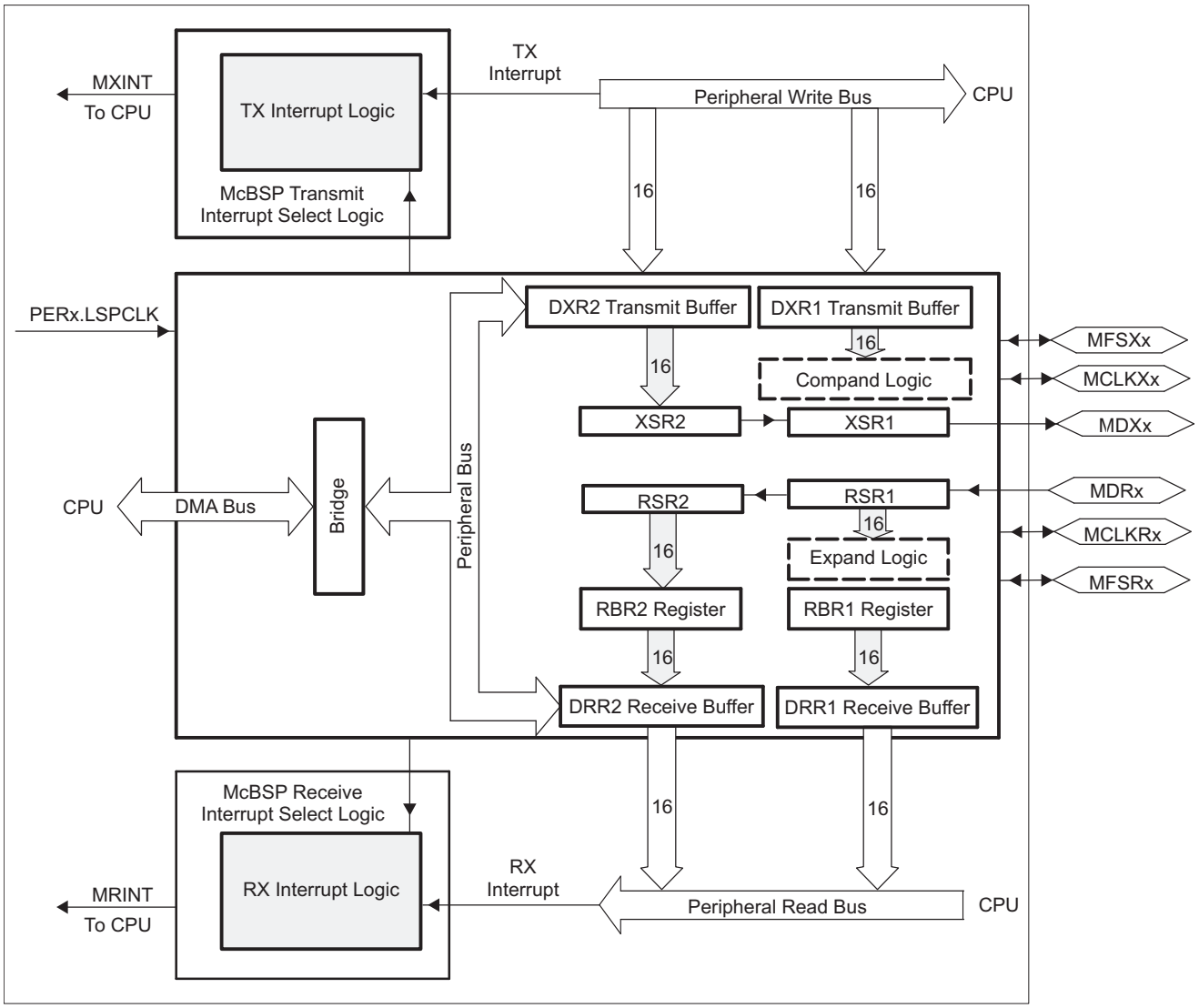

图 5-62. McBSP Block Diagram

5.12.3.1 McBSP Electrical Data and Timing

5.12.3.1.1 McBSP Transmit and Receive Timing

Table 5-71 shows the McBSP timing requirements. Table 5-72 shows the McBSP switching characteristics. 图 5-63 and 图 5-64 show the McBSP timing diagrams.

Table 5-71. McBSP Timing Requirements(1)(2)

NO.				MIN	MAX	UNIT
		McBSP module clock (CLKG, CLKX, CLKR) range		1		kHz
					25	MHz
		McBSP module cycle time (CLKG, CLKX, CLKR) range		40		ns
					1	ms
M11	$t_{c(CKRX)}$	Cycle time, CLKR/X	CLKR/X ext	2P		ns
M12	$t_{w(CKRX)}$	Pulse duration, CLKR/X high or CLKR/X low	CLKR/X ext	P – 7		ns
M13	$t_{r(CKRX)}$	Rise time, CLKR/X	CLKR/X ext		7	ns
M14	$t_{f(CKRX)}$	Fall time, CLKR/X	CLKR/X ext		7	ns
M15	$t_{su(FRH-CKRL)}$	Setup time, external FSR high before CLKR low	CLKR int	18		ns
			CLKR ext	2		
M16	$t_{h(CKRL-FRH)}$	Hold time, external FSR high after CLKR low	CLKR int	0		ns
			CLKR ext	6		
M17	$t_{su(DRV-CKRL)}$	Setup time, DR valid before CLKR low	CLKR int	18		ns
			CLKR ext	5		
M18	$t_{h(CKRL-DRV)}$	Hold time, DR valid after CLKR low	CLKR int	0		ns
			CLKR ext	3		
M19	$t_{su(FXH-CKXL)}$	Setup time, external FSX high before CLKX low	CLKX int	18		ns
			CLKX ext	2		
M20	$t_{h(CKXL-FXH)}$	Hold time, external FSX high after CLKX low	CLKX int	0		ns
			CLKX ext	6		

(1) Polarity bits CLKRP = CLKXP = FSRP = FSXP = 0. If the polarity of any of the signals is inverted, then the timing references of that signal are also inverted.
(2) 2P = 1/CLKG in ns. CLKG is the output of sample rate generator mux. CLKG = CLKSRG / (1 + CLKGDV). CLKSRG can be LSPCLK, CLKX, CLKR as source. CLKSRG ≤ (SYSCLK/2).

版权 © 2014–2020, Texas Instruments Incorporated

Table 5-72. McBSP Switching Characteristics[(1)(2)]

over recommended operating conditions (unless otherwise noted)

NO.	PARAMETER				MIN	MAX	UNIT
M1	$t_{c(CKRX)}$	Cycle time, CLKR/X		CLKR/X int	2P		ns
M2	$t_{w(CKRXH)}$	Pulse duration, CLKR/X high		CLKR/X int	D – 5 [(3)]	D + 5 [(3)]	ns
M3	$t_{w(CKRXL)}$	Pulse duration, CLKR/X low		CLKR/X int	C – 5 [(3)]	C + 5 [(3)]	ns
M4	$t_{d(CKRH-FRV)}$	Delay time, CLKR high to internal FSR valid		CLKR int	-7	7.5	ns
				CLKR ext	3	27	
M5	$t_{d(CKXH-FXV)}$	Delay time, CLKX high to internal FSX valid		CLKX int	-5	6	ns
				CLKX ext	3	27	
M6	$t_{dis(CKXH-DXHZ)}$	Disable time, CLKX high to DX high impedance following last data bit		CLKX int	–8	8	ns
				CLKX ext	3	15	
M7	$t_{d(CKXH-DXV)}$	Delay time, CLKX high to DX valid. This applies to all bits except the first bit transmitted.		CLKX int	–3	9	ns
				CLKX ext	5	25	
		Delay time, CLKX high to DX valid	DXENA = 0	CLKX int	–3	8	
				CLKX ext	5	20	
		Only applies to first bit transmitted when in Data Delay 1 or 2 (XDATDLY=01b or 10b) modes	DXENA = 1	CLKX int	P – 3	P + 8	
				CLKX ext	P + 5	P + 20	
M8	$t_{en(CKXH-DX)}$	Enable time, CLKX high to DX driven	DXENA = 0	CLKX int	-6		ns
				CLKX ext	4		
		Only applies to first bit transmitted when in Data Delay 1 or 2 (XDATDLY=01b or 10b) modes	DXENA = 1	CLKX int	P - 6		
				CLKX ext	P + 4		
M9	$t_{d(FXH-DXV)}$	Delay time, FSX high to DX valid	DXENA = 0	FSX int		8	ns
				FSX ext		17	
		Only applies to first bit transmitted when in Data Delay 0 (XDATDLY=00b) mode.	DXENA = 1	FSX int		P + 8	
				FSX ext		P + 17	
M10	$t_{en(FXH-DX)}$	Enable time, FSX high to DX driven	DXENA = 0	FSX int	-3		ns
				FSX ext	6		
		Only applies to first bit transmitted when in Data Delay 0 (XDATDLY=00b) mode	DXENA = 1	FSX int	P - 3		
				FSX ext	P + 6		

(1) Polarity bits CLKRP = CLKXP = FSRP = FSXP = 0. If the polarity of any of the signals is inverted, then the timing references of that signal are also inverted.
(2) 2P = 1/CLKG in ns.
(3) C = CLKRX low pulse width = P
D = CLKRX high pulse width = P

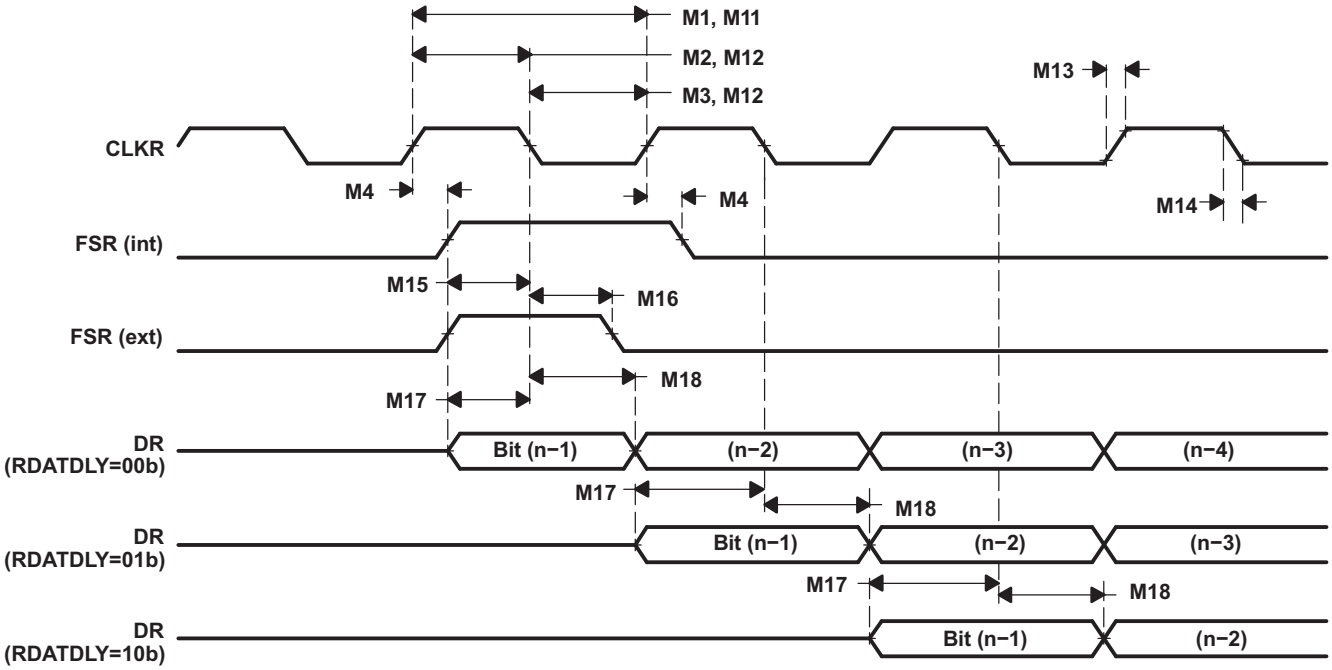

图 5-63. McBSP Receive Timing

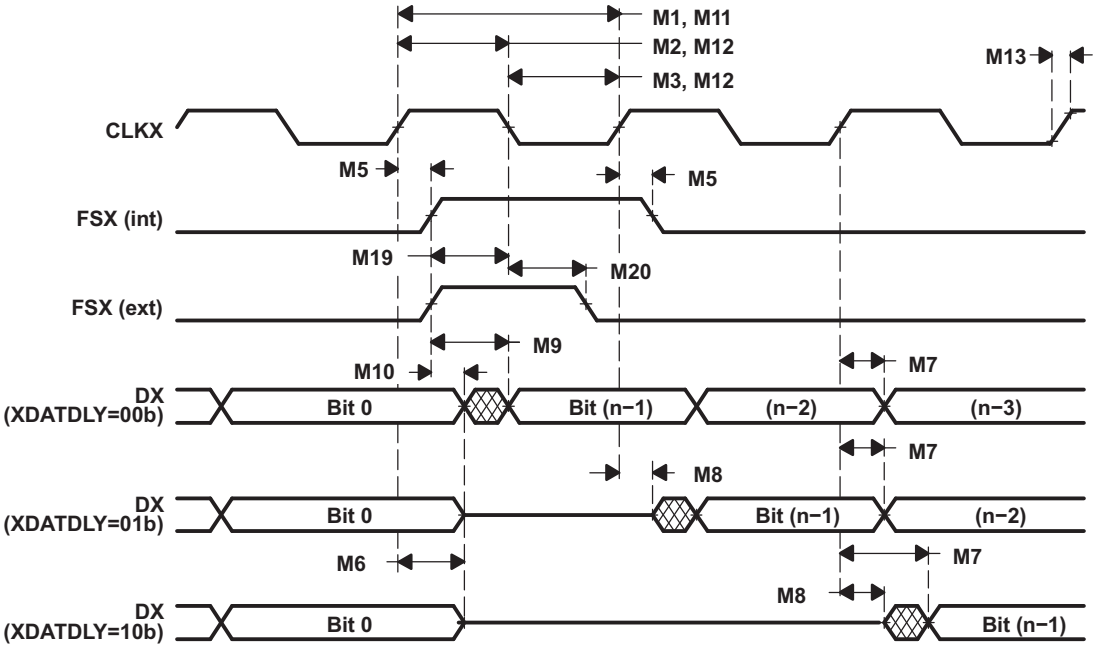

图 5-64. McBSP Transmit Timing

版权 © 2014–2020, Texas Instruments Incorporated

5.12.3.1.2 McBSP as SPI Master or Slave Timing

Table 5-73 lists the McBSP as SPI master timing requirements. Table 5-74 lists the McBSP as SPI master switching characteristics. Table 5-75 lists the McBSP as SPI slave timing requirements. Table 5-76 lists the McBSP as SPI slave switching characteristics.

图 5-65 through 图 5-68 show the McBSP as SPI master or slave timing diagrams.

Table 5-73. McBSP as SPI Master Timing Requirements

NO.			MIN	MAX	UNIT
CLOCK					
	$t_{c(CLKG)}$	Cycle time, CLKG (1)	2 * $t_{c(LSPCLK)}$		ns
	P	Cycle time, LSPCLK (1)	$t_{c(LSPCLK)}$		ns
M33, M42, M52, M61	$t_{c(CKX)}$	Cycle time, CLKX	2P		ns
CLKSTP = 10b, CLKXP = 0					
M30	$t_{su(DRV-CKXL)}$	Setup time, DR valid before CLKX low	30		ns
M31	$t_{h(CKXL-DRV)}$	Hold time, DR valid after CLKX low	1		ns
CLKSTP = 11b, CLKXP = 0					
M39	$t_{su(DRV-CKXH)}$	Setup time, DR valid before CLKX high	30		ns
M40	$t_{h(CKXH-DRV)}$	Hold time, DR valid after CLKX high	1		ns
CLKSTP = 10b, CLKXP = 1					
M49	$t_{su(DRV-CKXH)}$	Setup time, DR valid before CLKX high	30		ns
M50	$t_{h(CKXH-DRV)}$	Hold time, DR valid after CLKX high	1		ns
CLKSTP = 11b, CLKXP = 1					
M58	$t_{su(DRV-CKXL)}$	Setup time, DR valid before CLKX low	30		ns
M59	$t_{h(CKXL-DRV)}$	Hold time, DR valid after CLKX low	1		ns

(1) CLKG should be configured to LSPCLK/2 by setting CLKSM = 1 and CLKGDV = 1

Table 5-74. McBSP as SPI Master Switching Characteristics

over operating free-air temperature range (unless otherwise noted)

NO.	PARAMETER		MIN	TYP	MAX	UNIT
CLOCK						
M33	$t_{c(CLKG)}$	Cycle time, CLKG[1] (n * $t_{c(LSPCLK)}$)	40			ns
	P	Half CLKG cycle; 0.5 * $t_{c(CLKG)}$	20			ns
	n	LSPCLK to CLKG divider	2			ns
CLKSTP = 10b, CLKXP = 0						
M24	$t_{h(CKXL-FXL)}$	Hold time, FSX high after CLKX low	2P – 6			ns
M25	$t_{d(FXL-CKXH)}$	Delay time, FSX low to CLKX high	P – 6			ns
M26	$t_{d(CLKXH-DXV)}$	Delay time, CLKX high to DX valid	–4		6	ns
M28	$t_{dis(FXH-DXHZ)}$	Disable time, DX high impedance following last data bit from CLKX low	P – 8			ns
M29	$t_{d(FXL-DXV)}$	Delay time, FSX low to DX valid	P – 3		P + 6	ns
CLKSTP = 11b, CLKXP = 0						
M34	$t_{h(CKXL-FXH)}$	Hold time, FSX high after CLKX low	P – 6			ns
M35	$t_{d(FXL-CKXH)}$	Delay time, FSX low to CLKX high	P – 6			ns
M36	$t_{d(CLKXL-DXV)}$	Delay time, CLKX low to DX valid	–4		6	ns
M37	$t_{dis(CKXL-DXHZ)}$	Disable time, DX high impedance following last data bit from CLKX low	P – 6			ns
M38	$t_{d(FXL-DXV)}$	Delay time, FSX low to DX valid	–2		1	ns
CLKSTP = 10b, CLKXP = 1						
M43	$t_{h(CKXH-FXH)}$	Hold time, FSX high after CLKX high	2P – 6			ns
M44	$t_{d(FXL-CKXL)}$	Delay time, FSX low to CLKX low	P – 6			ns
M45	$t_{d(CLKXL-DXV)}$	Delay time, CLKX low to DX valid	–4		6	ns
M47	$t_{dis(FXH-DXHZ)}$	Disable time, DX high impedance following last data bit from CLKX low	P – 6			ns
M48	$t_{d(FXL-DXV)}$	Delay time, FSX low to DX valid	–2		1	ns
CLKSTP = 11b, CLKXP = 1						
M53	$t_{h(CKXH-FXH)}$	Hold time, FSX high after CLKX high	P – 6			ns
M54	$t_{d(FXL-CKXL)}$	Delay time, FSX low to CLKX low	2P – 6			ns
M55	$t_{d(CLKXH-DXV)}$	Delay time, CLKX high to DX valid	–4		6	ns
M56	$t_{dis(CKXH-DXHZ)}$	Disable time, DX high impedance following last data bit from CLKX high	P – 8			ns
M57	$t_{d(FXL-DXV)}$	Delay time, FSX low to DX valid	–2		1	ns

(1) CLKG should be configured to LSPCLK/2 by setting CLKSM = 1 and CLKGDV = 1.

版权 © 2014–2020, Texas Instruments Incorporated

Table 5-75. McBSP as SPI Slave Timing Requirements

NO.			MIN	MAX	UNIT
CLOCK					
	$t_{c(CLKG)}$	Cycle time, CLKG[(1)]	2 * $t_{c(LSPCLK)}$		ns
	P	Cycle time, LSPCLK[(1)]	$t_{c(LSPCLK)}$		ns
M33, M42, M52, M61	$t_{c(CKX)}$	Cycle time, CLKX[(2)]	16P		ns
CLKSTP = 10b, CLKXP = 0					
M30	$t_{su(DRV-CKXL)}$	Setup time, DR valid before CLKX low	8P – 10		ns
M31	$t_{h(CKXL-DRV)}$	Hold time, DR valid after CLKX low	8P – 10		ns
M32	$t_{su(BFXL-CKXH)}$	Setup time, FSX low before CLKX high	8P+10		ns
CLKSTP = 11b, CLKXP = 0					
M39	$t_{su(DRV-CKXH)}$	Setup time, DR valid before CLKX high	8P – 10		ns
M40	$t_{h(CKXH-DRV)}$	Hold time, DR valid after CLKX high	8P – 10		ns
M41	$t_{su(FXL-CKXH)}$	Setup time, FSX low before CLKX high	16P+10		ns
CLKSTP = 10b, CLKXP = 1					
M49	$t_{su(DRV-CKXH)}$	Setup time, DR valid before CLKX high	8P – 10		ns
M50	$t_{h(CKXH-DRV)}$	Hold time, DR valid after CLKX high	8P – 10		ns
M51	$t_{su(FXL-CKXL)}$	Setup time, FSX low before CLKX low	8P+10		ns
CLKSTP = 11b, CLKXP = 1					
M58	$t_{su(DRV-CKXL)}$	Setup time, DR valid before CLKX low	8P – 10		ns
M59	$t_{h(CKXL-DRV)}$	Hold time, DR valid after CLKX low	8P – 10		ns
M60	$t_{su(FXL-CKXL)}$	Setup time, FSX low before CLKX low	16P+10		ns

(1) CLKG should be configured to LSPCLK/2 by setting CLKSM = 1 and CLKGDV = 1
(2) For SPI slave modes CLKX must be a minimum of 8 CLKG cycles

Table 5-76. McBSP as SPI Slave Switching Characteristics

over operating free-air temperature range (unless otherwise noted)

NO.	PARAMETER		MIN	TYP	MAX	UNIT
CLOCK						
	2P	Cycle time, CLKG				ns
CLKSTP = 10b, CLKXP = 0						
M26	$t_{d(CLKXH-DXV)}$	Delay time, CLKX high to DX valid	3P + 6		5P + 20	ns
M28	$t_{dis(FXH-DXHZ)}$	Disable time, DX high impedance following last data bit from FSX high	6P + 6			ns
M29	$t_{d(FXL-DXV)}$	Delay time, FSX low to DX valid	4P + 6			ns
CLKSTP = 11b, CLKXP = 0						
M36	$t_{d(CLKXL-DXV)}$	Delay time, CLKX low to DX valid	3P + 6		5P + 20	ns
M37	$t_{dis(CKXL-DXHZ)}$	Disable time, DX high impedance following last data bit from CLKX low	7P + 6			ns
M38	$t_{d(FXL-DXV)}$	Delay time, FSX low to DX valid	4P + 6			ns
CLKSTP = 10b, CLKXP = 1						
M45	$t_{d(CLKXL-DXV)}$	Delay time, CLKX low to DX valid	3P + 6		5P + 20	ns
M47	$t_{dis(FXH-DXHZ)}$	Disable time, DX high impedance following last data bit from FSX high	6P + 6			ns
M48	$t_{d(FXL-DXV)}$	Delay time, FSX low to DX valid	4P + 6			ns
CLKSTP = 11b, CLKXP = 1						
M55	$t_{d(CLKXH-DXV)}$	Delay time, CLKX high to DX valid	3P + 6		5P + 20	ns
M56	$t_{dis(CKXH-DXHZ)}$	Disable time, DX high impedance following last data bit from CLKX high	7P + 6			ns
M57	$t_{d(FXL-DXV)}$	Delay time, FSX low to DX valid	4P + 6			ns

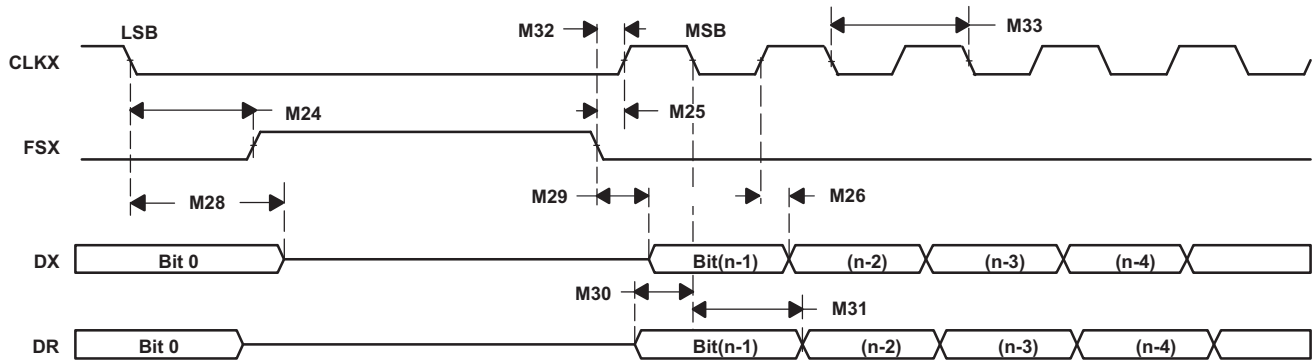

图 5-65. McBSP Timing as SPI Master or Slave: CLKSTP = 10b, CLKXP = 0

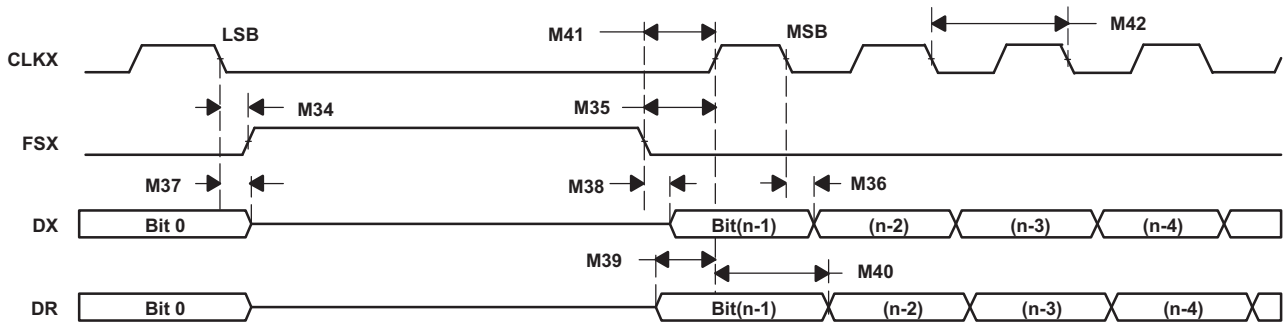

图 5-66. McBSP Timing as SPI Master or Slave: CLKSTP = 11b, CLKXP = 0

版权 © 2014–2020, Texas Instruments Incorporated

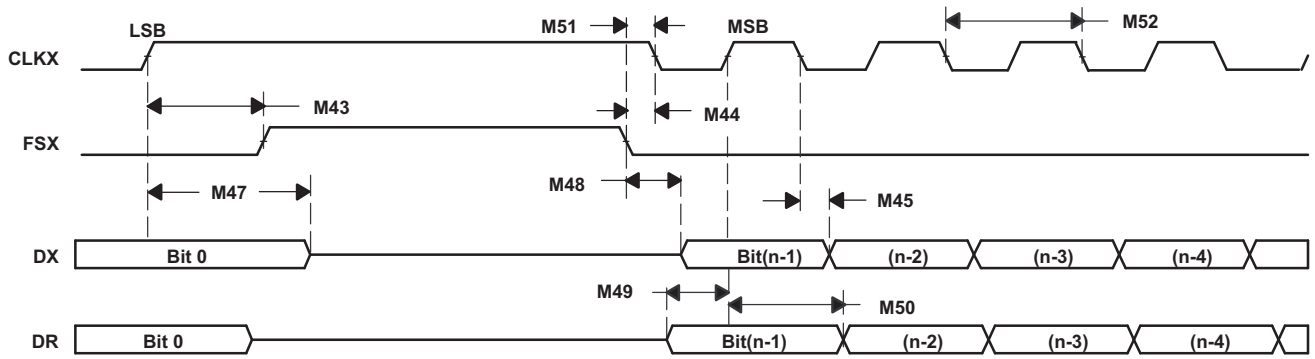

图 5-67. McBSP Timing as SPI Master or Slave: CLKSTP = 10b, CLKXP = 1

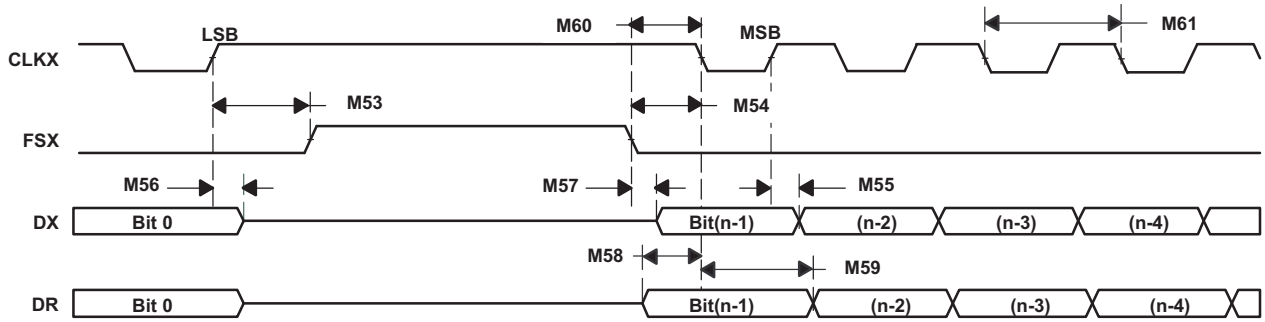

图 5-68. McBSP Timing as SPI Master or Slave: CLKSTP = 11b, CLKXP = 1

5.12.4 Serial Communications Interface (SCI)

The SCI is a 2-wire asynchronous serial port, commonly known as a UART. The SCI module supports digital communications between the CPU and other asynchronous peripherals that use the standard non-return-to-zero (NRZ) format

The SCI receiver and transmitter each have a 16-level-deep FIFO for reducing servicing overhead, and each has its own separate enable and interrupt bits. Both can be operated independently for half-duplex communication, or simultaneously for full-duplex communication. To specify data integrity, the SCI checks received data for break detection, parity, overrun, and framing errors. The bit rate is programmable to different speeds through a 16-bit baud-select register. 图 5-69 shows the SCI block diagram.

Features of the SCI module include:

- Two external pins:
  - SCITXD: SCI transmit-output pin
  - SCIRXD: SCI receive-input pin

    NOTE: Both pins can be used as GPIO if not used for SCI.
  - Baud rate programmable to 64K different rates
- Data-word format
  - One start bit
  - Data-word length programmable from 1 to 8 bits
  - Optional even/odd/no parity bit
  - 1 or 2 stop bits
- Four error-detection flags: parity, overrun, framing, and break detection
- Two wakeup multiprocessor modes: idle-line and address bit
- Half- or full-duplex operation
- Double-buffered receive and transmit functions
- Transmitter and receiver operations can be accomplished through interrupt-driven or polled algorithms with status flags.
  - Transmitter: TXRDY flag (transmitter-buffer register is ready to receive another character) and TX EMPTY flag (transmitter-shift register is empty)
  - Receiver: RXRDY flag (receiver-buffer register is ready to receive another character), BRKDT flag (break condition occurred), and RX ERROR flag (monitoring four interrupt conditions)
- Separate enable bits for transmitter and receiver interrupts (except BRKDT)
- NRZ format
- Auto baud-detect hardware logic
- 16-level transmit and receive FIFO

注

All registers in this module are 8-bit registers. When a register is accessed, the register data is in the lower byte (bits 7–0), and the upper byte (bits 15–8) is read as zeros. Writing to the upper byte has no effect.

版权 © 2014–2020, Texas Instruments Incorporated

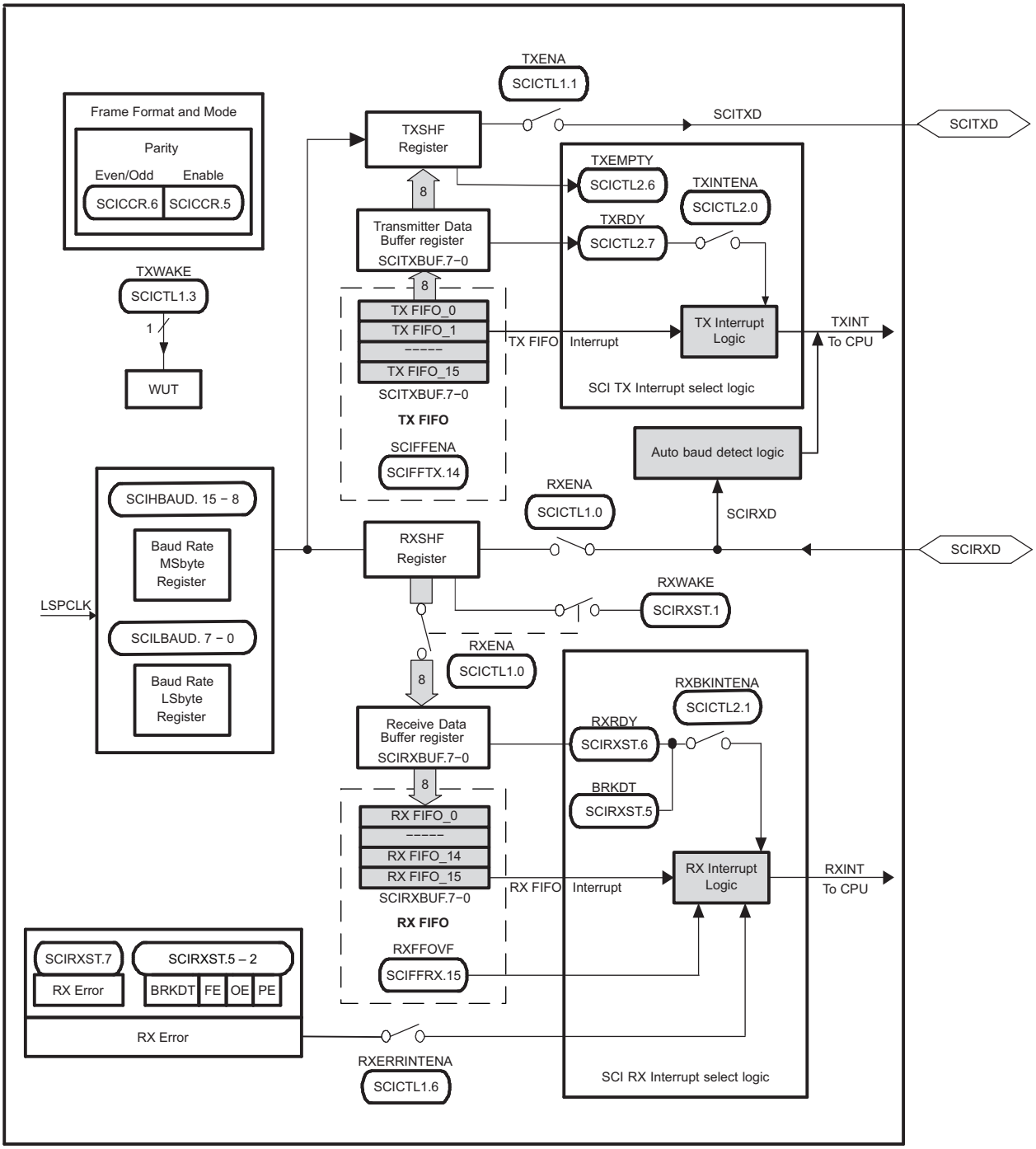

图 5-69. SCI Block Diagram

The major elements used in full-duplex operation include:

- A transmitter (TX) and its major registers:
  - SCITXBUF register – Transmitter Data Buffer register. Contains data (loaded by the CPU) to be transmitted
  - TXSHF register – Transmitter Shift register. Accepts data from the SCITXBUF register and shifts data onto the SCITXD pin, 1 bit at a time
- A receiver (RX) and its major registers:
  - RXSHF register – Receiver Shift register. Shifts data in from the SCIRXD pin, 1 bit at a time
  - SCIRXBUF register – Receiver Data Buffer register. Contains data to be read by the CPU. Data from a remote processor is loaded into the RXSHF register and then into the SCIRXBUF and SCIRXEMU registers
- A programmable baud generator
- Data-memory-mapped control and status registers enable the CPU to access the I2C module registers and FIFOs.

The SCI receiver and transmitter operate independently.

版权 © 2014–2020, Texas Instruments Incorporated

5.12.5 Serial Peripheral Interface (SPI)

The SPI is a high-speed synchronous serial input/output (I/O) port that allows a serial bit stream of programmed length (1 to 16 bits) to be shifted into and out of the device at a programmed bit-transfer rate. The SPI is normally used for communications between the microcontroller and external peripherals or another controller. Typical applications include external I/O or peripheral expansion through devices such as shift registers, display drivers, and ADCs. Multidevice communications are supported by the master/slave operation of the SPI. The port supports 16-level receive and transmit FIFOs for reducing CPU servicing overhead.

The SPI module features include:

- SPISOMI: SPI slave-output/master-input pin
- SPISIMO: SPI slave-input/master-output pin
- $\overline{\text{SPISTE}}$: SPI slave transmit-enable pin
- SPICLK: SPI serial-clock pin
- Two operational modes: master and slave
- Baud rate: 125 different programmable rates
- Data word length: 1 to 16 data bits
- Four clocking schemes (controlled by clock polarity and clock phase bits) include:
  - Falling edge without phase delay: SPICLK active-high. SPI transmits data on the falling edge of the SPICLK signal and receives data on the rising edge of the SPICLK signal.
  - Falling edge with phase delay: SPICLK active-high. SPI transmits data one half-cycle ahead of the falling edge of the SPICLK signal and receives data on the falling edge of the SPICLK signal.
  - Rising edge without phase delay: SPICLK inactive-low. SPI transmits data on the rising edge of the SPICLK signal and receives data on the falling edge of the SPICLK signal.
  - Rising edge with phase delay: SPICLK inactive-low. SPI transmits data one half-cycle ahead of the rising edge of the SPICLK signal and receives data on the rising edge of the SPICLK signal.
- Simultaneous receive-and-transmit operation (transmit function can be disabled in software)
- Transmitter and receiver operations are accomplished through either interrupt-driven or polled algorithms.
- 16-level transmit and receive FIFO
- Delayed transmit control
- 3-wire SPI mode
- $\overline{\text{SPISTE}}$ inversion for digital audio interface receive mode on devices with two SPI modules
- DMA support
- High-speed mode for up to 50-MHz full-duplex communication

The SPI operates in master or slave mode. The master initiates data transfer by sending the SPICLK signal. For both the slave and the master, data is shifted out of the shift registers on one edge of the SPICLK and latched into the shift register on the opposite SPICLK clock edge. If the CLOCK PHASE bit (SPICTL.3) is high, data is transmitted and received a half-cycle before the SPICLK transition. As a result, both controllers send and receive data simultaneously. The application software determines whether the data is meaningful or dummy data. There are three possible methods for data transmission:

- Master sends data; slave sends dummy data
- Master sends data; slave sends data
- Master sends dummy data; slave sends data

The master can initiate a data transfer at any time because it controls the SPICLK signal. The software, however, determines how the master detects when the slave is ready to broadcast data.

图 5-70 shows the SPI CPU Interface.

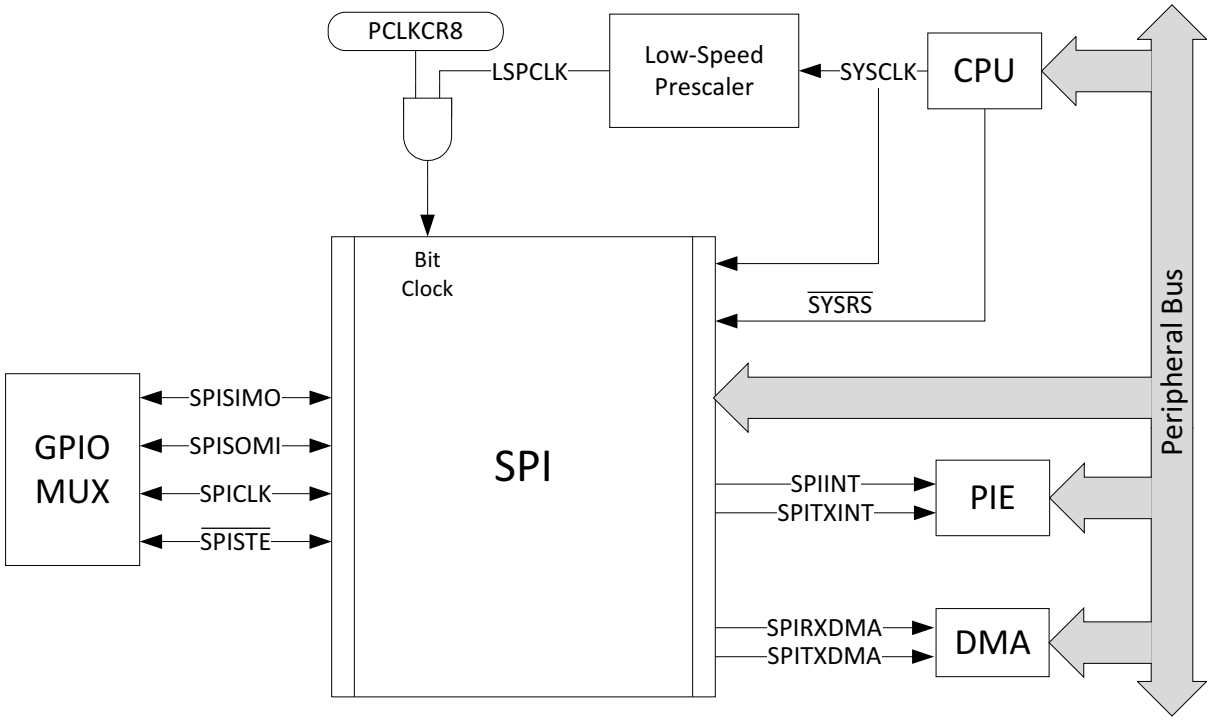

图 5-70. SPI CPU Interface

版权 © 2014–2020, Texas Instruments Incorporated

5.12.5.1 SPI Electrical Data and Timing

注

All timing parameters for SPI High-Speed Mode assume a load capacitance of 5 pF on SPICLK, SPISIMO, and SPISOMI.

For more information about the SPI in High-Speed mode, see the Serial Peripheral Interface (SPI) chapter of the *TMS320F2837xS Microcontrollers Technical Reference Manual*.

To use the SPI in High-Speed mode, the application must use the high-speed enabled GPIOs (see Section 4.4.5).

5.12.5.1.1 SPI Master Mode Timings

Table 5-77 lists the SPI master mode timing requirements. Table 5-78 lists the SPI master mode switching characteristics (clock phase = 0). Table 5-79 lists the SPI master mode switching characteristics (clock phase = 1). 图 5-71 shows the SPI master mode external timing where the clock phase = 0. 图 5-72 shows the SPI master mode external timing where the clock phase = 1.

Table 5-77. SPI Master Mode Timing Requirements

NO.			(BRR + 1) CONDITION (1)	MIN	MAX	UNIT
High Speed Mode						
8	$t_{su(SOMI)M}$	Setup time, SPISOMI valid before SPICLK	Even, Odd	1		ns
9	$t_{h(SOMI)M}$	Hold time, SPISOMI valid after SPICLK	Even, Odd	5		ns
Normal Mode						
8	$t_{su(SOMI)M}$	Setup time, SPISOMI valid before SPICLK	Even, Odd	20		ns
9	$t_{h(SOMI)M}$	Hold time, SPISOMI valid after SPICLK	Even, Odd	0		ns

(1) The (BRR + 1) condition is Even when (SPIBRR + 1) is even or SPIBRR is 0 or 2. It is Odd when (SPIBRR + 1) is odd and SPIBRR is greater than 3.

Table 5-78. SPI Master Mode Switching Characteristics (Clock Phase = 0)

over recommended operating conditions (unless otherwise noted)

NO.	PARAMETER		(BRR + 1) CONDITION(1)	MIN	MAX	UNIT
General						
1	$t_{c(SPC)M}$	Cycle time, SPICLK	Even	$4t_{c(LSPCLK)}$	$128t_{c(LSPCLK)}$	ns
			Odd	$5t_{c(LSPCLK)}$	$127t_{c(LSPCLK)}$	
2	$t_{w(SPC1)M}$	Pulse duration, SPICLK, first pulse	Even	$0.5t_{c(SPC)M} – 1$	$0.5t_{c(SPC)M} + 1$	ns
			Odd	$0.5t_{c(SPC)M} + 0.5t_{c(LSPCLK)} – 1$	$0.5t_{c(SPC)M} + 0.5t_{c(LSPCLK)} + 1$	
3	$t_{w(SPC2)M}$	Pulse duration, SPICLK, second pulse	Even	$0.5t_{c(SPC)M} – 1$	$0.5t_{c(SPC)M} + 1$	ns
			Odd	$0.5t_{c(SPC)M} – 0.5t_{c(LSPCLK)} – 1$	$0.5t_{c(SPC)M} – 0.5t_{c(LSPCLK)} + 1$	
23	$t_{d(SPC)M}$	Delay time, $\overline{SPISTE}$ active to SPICLK	Even	$1.5t_{c(SPC)M} - 3t_{c(SYSCLK)} – 7$	$1.5t_{c(SPC)M} - 3t_{c(SYSCLK)} + 5$	ns
			Odd	$1.5t_{c(SPC)M} - 4t_{c(SYSCLK)} – 7$	$1.5t_{c(SPC)M} - 4t_{c(SYSCLK)} + 5$	
24	$t_{v(STE)M}$	Valid time, SPICLK to $\overline{SPISTE}$ inactive	Even	$0.5t_{c(SPC)M} – 7$	$0.5t_{c(SPC)M} + 5$	ns
			Odd	$0.5t_{c(SPC)M} – 0.5t_{c(LSPCLK)} – 7$	$0.5t_{c(SPC)M} – 0.5t_{c(LSPCLK)} + 5$	
High Speed Mode						
4	$t_{d(SIMO)M}$	Delay time, SPICLK to SPISIMO valid	Even, Odd		1	ns
5	$t_{v(SIMO)M}$	Valid time, SPISIMO valid after SPICLK	Even	$0.5t_{c(SPC)M} – 2$		ns
			Odd	$0.5t_{c(SPC)M} – 0.5t_{c(LSPCLK)} – 2$		
Normal Mode						
4	$t_{d(SIMO)M}$	Delay time, SPICLK to SPISIMO valid	Even, Odd		6	ns
5	$t_{v(SIMO)M}$	Valid time, SPISIMO valid after SPICLK	Even	$0.5t_{c(SPC)M} – 5$		ns
			Odd	$0.5t_{c(SPC)M} – 0.5t_{c(LSPCLK)} – 5$		

(1) The (BRR + 1) condition is Even when (SPIBRR + 1) is even or SPIBRR is 0 or 2. It is Odd when (SPIBRR + 1) is odd and SPIBRR is greater than 3.

版权 © 2014–2020, Texas Instruments Incorporated

Table 5-79. SPI Master Mode Switching Characteristics (Clock Phase = 1)

over recommended operating conditions (unless otherwise noted)

NO.	PARAMETER		(BRR + 1) CONDITION(1)	MIN	MAX	UNIT
General						
1	$t_{c(SPC)M}$	Cycle time, SPICLK	Even	$4t_{c(LSPCLK)}$	$128t_{c(LSPCLK)}$	ns
			Odd	$5t_{c(LSPCLK)}$	$127t_{c(LSPCLK)}$	
2	$t_{w(SPCH)M}$	Pulse duration, SPICLK, first pulse	Even	$0.5t_{c(SPC)M} – 1$	$0.5t_{c(SPC)M} + 1$	ns
			Odd	$0.5t_{c(SPC)M} – 0.5t_{c(LSPCLK)} – 1$	$0.5t_{c(SPC)M} – 0.5t_{c(LSPCLK)} + 1$	
3	$t_{w(SPC2)M}$	Pulse duration, SPICLK, second pulse	Even	$0.5t_{c(SPC)M} – 1$	$0.5t_{c(SPC)M} + 1$	ns
			Odd	$0.5t_{c(SPC)M} + 0.5t_{c(LSPCLK)} – 1$	$0.5t_{c(SPC)M} + 0.5t_{c(LSPCLK)} + 1$	
23	$t_{d(SPC)M}$	Delay time, $\overline{SPISTE}$ valid to SPICLK	Even, Odd	2tc(SPC)M – 3tc(SYSCLK) – 7	2tc(SPC)M – 3tc(SYSCLK) + 5	ns
24	$t_{v(STE)M}$	Valid time, SPICLK to $\overline{SPISTE}$ invalid	Even	– 7	+5	ns
			Odd	– 7	+5	
High Speed Mode						
4	$t_{d(SIMO)M}$	Delay time, SPISIMO valid to SPICLK	Even	$0.5t_{c(SPC)M} – 1$		ns
			Odd	$0.5t_{c(SPC)M} + 0.5t_{c(LSPCLK)} – 1$		
5	$t_{v(SIMO)M}$	Valid time, SPISIMO valid after SPICLK	Even	$0.5t_{c(SPC)M} – 2$		ns
			Odd	$0.5t_{c(SPC)M} – 0.5t_{c(LSPCLK)} – 2$		
Normal Mode						
4	$t_{d(SIMO)M}$	Delay time, SPISIMO valid to SPICLK	Even	$0.5t_{c(SPC)M} – 5$		ns
			Odd	$0.5t_{c(SPC)M} + 0.5t_{c(LSPCLK)} – 5$		
5	$t_{v(SIMO)M}$	Valid time, SPISIMO valid after SPICLK	Even	$0.5t_{c(SPC)M} – 5$		ns
			Odd	$0.5t_{c(SPC)M} – 0.5t_{c(LSPCLK)} – 5$		

(1) The (BRR + 1) condition is Even when (SPIBRR + 1) is even or SPIBRR is 0 or 2. It is Odd when (SPIBRR + 1) is odd and SPIBRR is greater than 3.

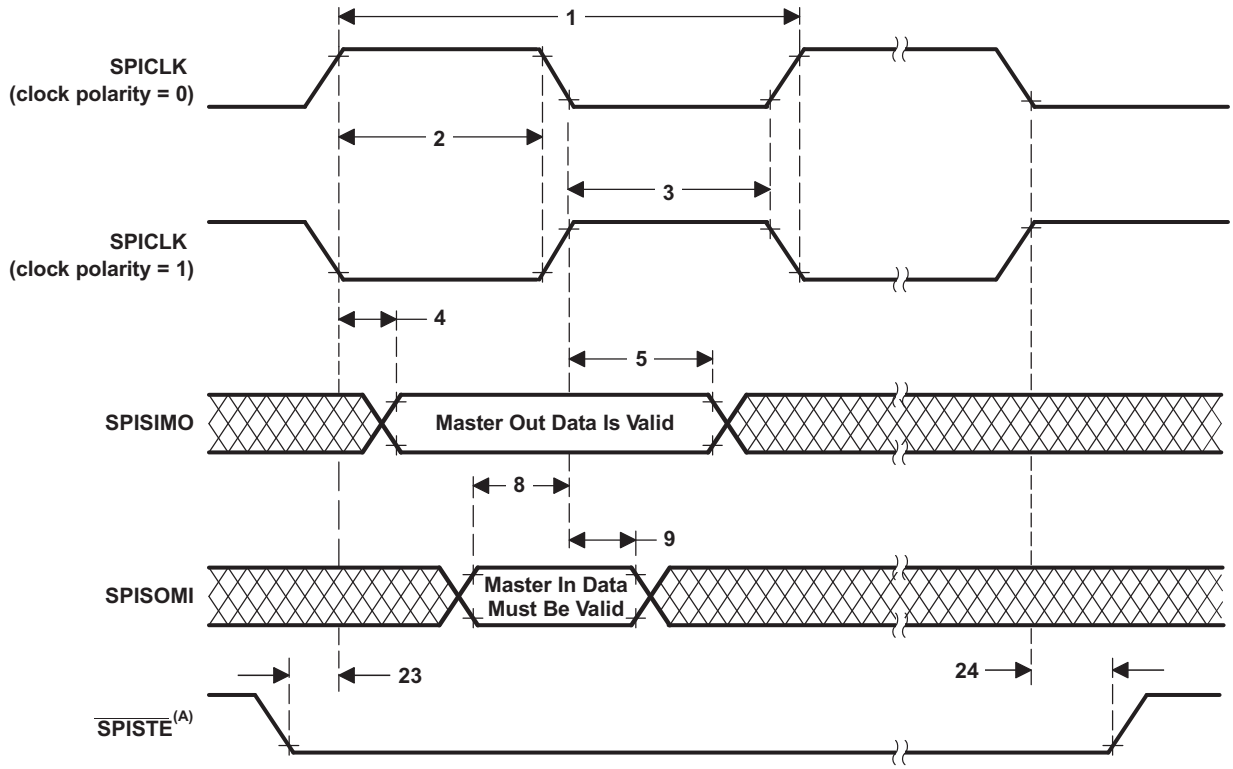

A. On the trailing end of the word, $\overline{\text{SPISTE}}$ will go inactive except between back-to-back transmit words in both FIFO and non-FIFO modes.

图 5-71. SPI Master Mode External Timing (Clock Phase = 0)

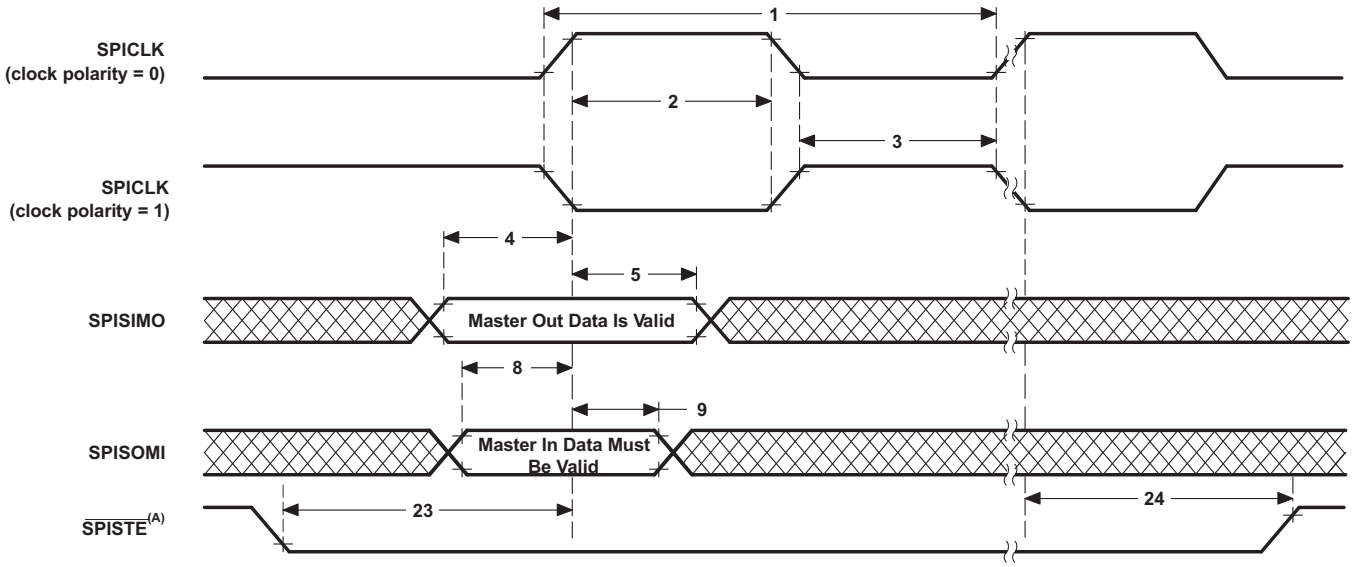

A. On the trailing end of the word, $\overline{\text{SPISTE}}$ will go inactive except between back-to-back transmit words in both FIFO and non-FIFO modes.

图 5-72. SPI Master Mode External Timing (Clock Phase = 1)

版权 © 2014–2020, Texas Instruments Incorporated

5.12.5.1.2 SPI Slave Mode Timings

Table 5-80 lists the SPI slave mode timing requirements. Table 5-81 lists the SPI slave mode switching characteristics. 图 5-73 shows the SPI slave mode external timing where the clock phase = 0. 图 5-74 shows the SPI slave mode external timing where the clock phase = 1.

Table 5-80. SPI Slave Mode Timing Requirements

NO.			MIN	MAX	UNIT
12	$t_{c(SPC)S}$	Cycle time, SPICLK	$4t_{c(SYSCLK)}$		ns
13	$t_{w(SPC1)S}$	Pulse duration, SPICLK, first pulse	$2t_{c(SYSCLK)} – 1$		ns
14	$t_{w(SPC2)S}$	Pulse duration, SPICLK, second pulse	$2t_{c(SYSCLK)} – 1$		ns
19	$t_{su(SIMO)S}$	Setup time, SPISIMO valid before SPICLK	$1.5t_{c(SYSCLK)}$		ns
20	$t_{h(SIMO)S}$	Hold time, SPISIMO valid after SPICLK	$1.5t_{c(SYSCLK)}$		ns
25	$t_{su(STE)S}$	Setup time, $\overline{SPISTE}$ valid before SPICLK	$2t_{c(SYSCLK)}$ +20		ns
26	$t_{h(STE)S}$	Hold time, $\overline{SPISTE}$ invalid after SPICLK	$1.5t_{c(SYSCLK)}$		ns

Table 5-81. SPI Slave Mode Switching Characteristics

over recommended operating conditions (unless otherwise noted)

NO.	PARAMETER		MIN	MAX	UNIT
High Speed Mode					
15	$t_{d(SOMI)S}$	Delay time, SPICLK to SPISOMI valid		9	ns
16	$t_{v(SOMI)S}$	Valid time, SPISOMI valid after SPICLK	0		ns
Normal Mode					
15	$t_{d(SOMI)S}$	Delay time, SPICLK to SPISOMI valid		20	ns
16	$t_{v(SOMI)S}$	Valid time, SPISOMI valid after SPICLK	0		ns

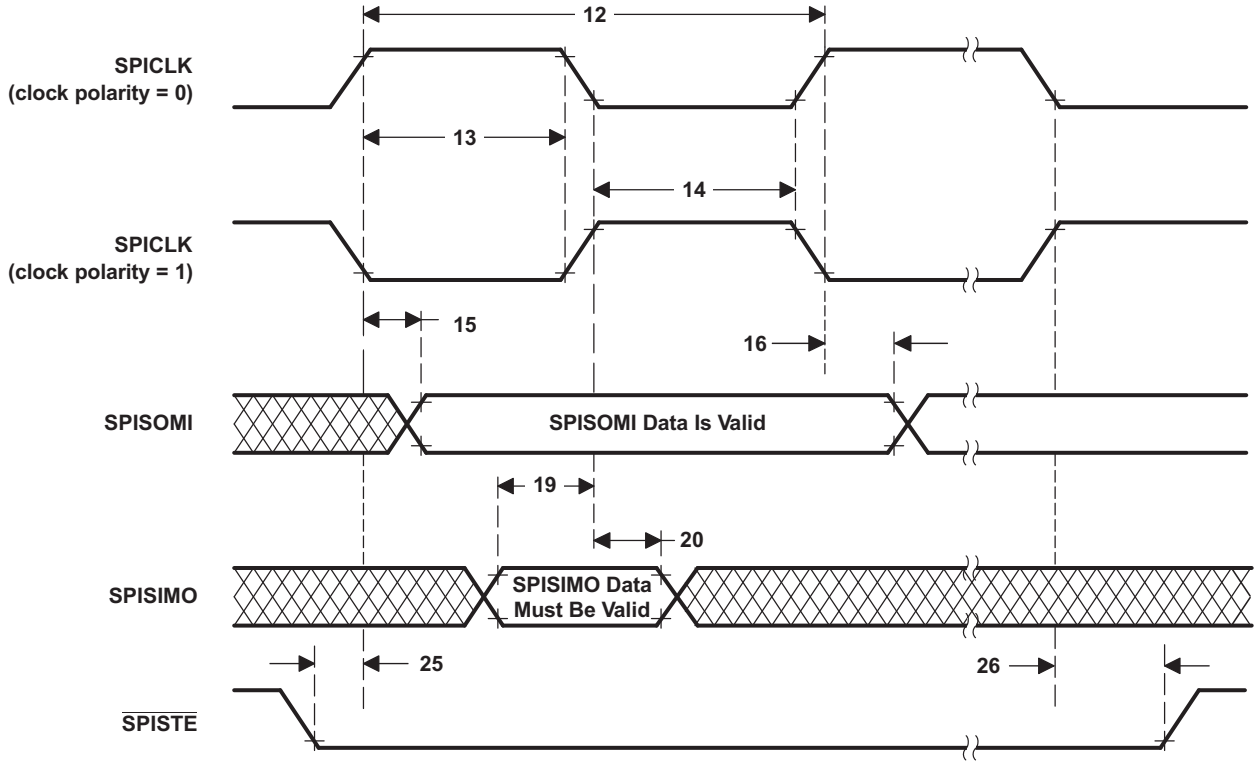

图 5-73. SPI Slave Mode External Timing (Clock Phase = 0)

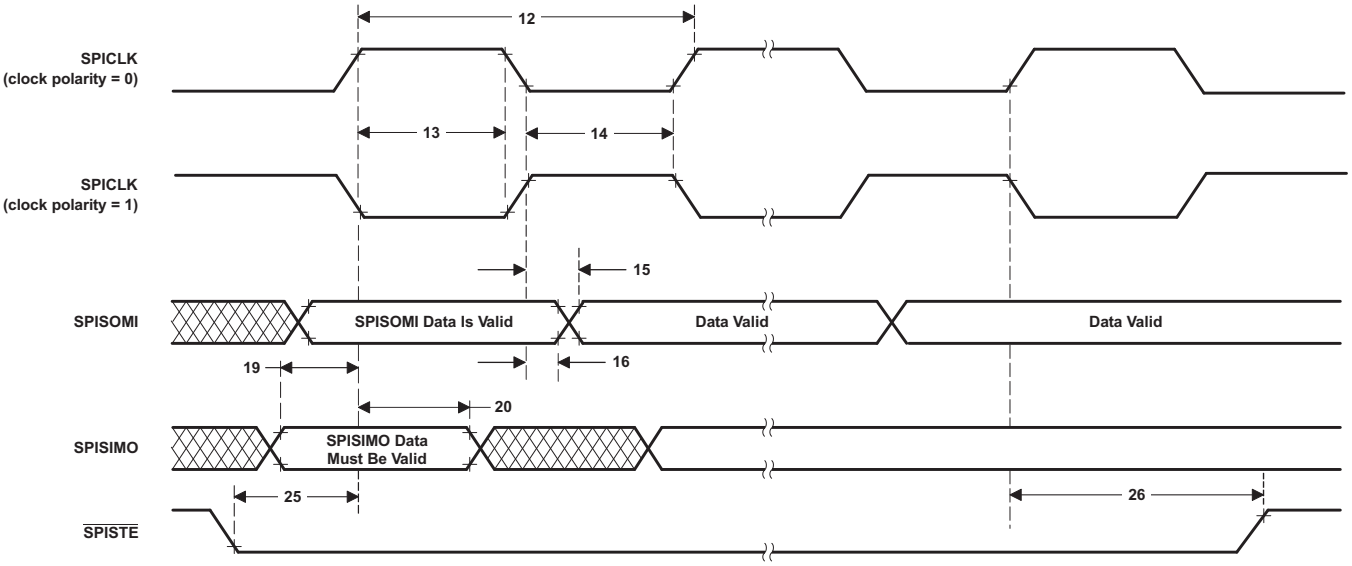

图 5-74. SPI Slave Mode External Timing (Clock Phase = 1)

版权 © 2014–2020, Texas Instruments Incorporated

5.12.6 Universal Serial Bus (USB) Controller

The USB controller operates as a full-speed or low-speed function controller during point-to-point communications with USB host or device functions.

The USB module has the following features:

- USB 2.0 full-speed and low-speed operation
- Integrated PHY
- Three transfer types: control, interrupt, and bulk
- 32 endpoints
  - One dedicated control IN endpoint and one dedicated control OUT endpoint
  - 15 configurable IN endpoints and 15 configurable OUT endpoints
- 4KB of dedicated endpoint memory

图 5-75 shows the USB block diagram.

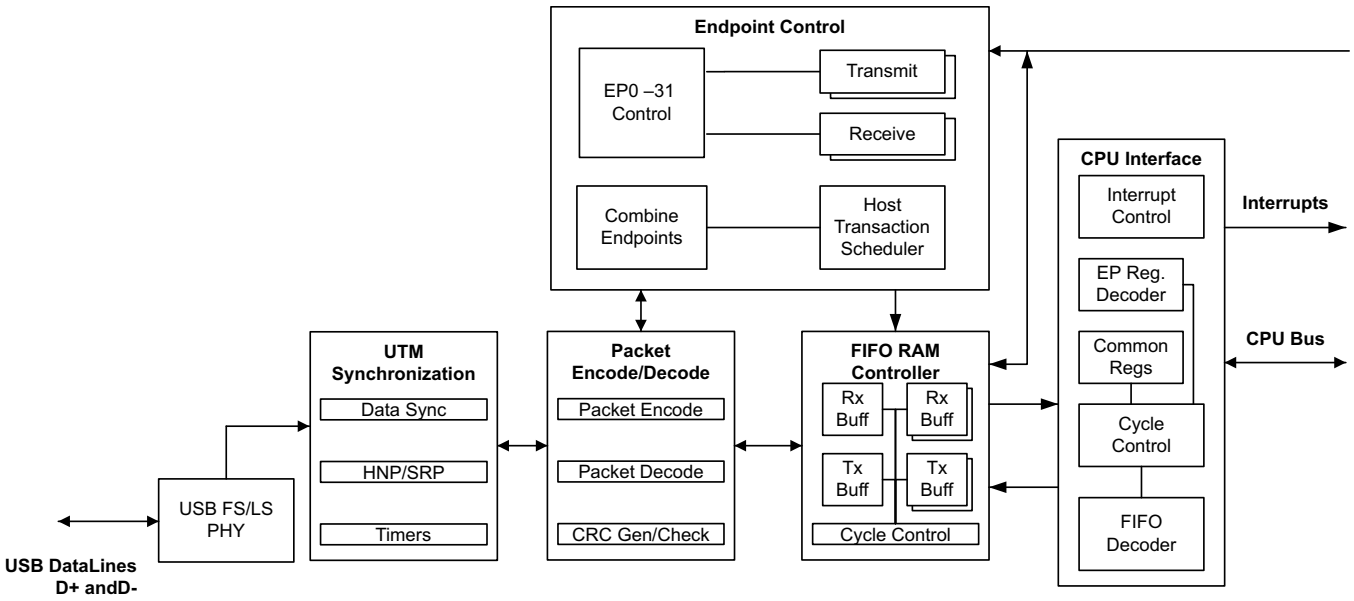

图 5-75. USB Block Diagram

注

The accuracy of the on-chip zero-pin oscillator (Table 5-18, Internal Oscillator Electrical Characteristics) will not meet the accuracy requirements of the USB protocol. An external clock source must be used for applications using USB. For applications using the USB boot mode, see 节 6.9 (Boot ROM and Peripheral Booting) for clock frequency requirements.

5.12.6.1 USB Electrical Data and Timing

Table 5-82 shows the USB input ports DP and DM timing requirements. Table 5-83 shows the USB output ports DP and DM switching characteristics.

Table 5-82. USB Input Ports DP and DM Timing Requirements

		MIN	MAX	UNIT
V(CM)	Differential input common mode range	0.8	2.5	V
Z(IN)	Input impedance	300		kΩ
VCRS	Crossover voltage	1.3	2.0	V
V_{IL}	Static SE input logic-low level	0.8		V
V_{IH}	Static SE input logic-high level		2.0	V
VDI	Differential input voltage		0.2	V

Table 5-83. USB Output Ports DP and DM Switching Characteristics

over recommended operating conditions (unless otherwise noted)

PARAMETER		TEST CONDITIONS	MIN	MAX	UNIT
V_{OH}	D+, D– single-ended	USB 2.0 load conditions	2.8	3.6	V
V_{OL}	D+, D– single-ended	USB 2.0 load conditions	0	0.3	V
Z(DRV)	D+, D– impedance		28	44	Ω
t_r	Rise time	Full speed, differential, C_L = 50 pF, 10%/90%, Rpu on D+	4	20	ns
t_f	Fall time	Full speed, differential, C_L = 50 pF, 10%/90%, Rpu on D+	4	20	ns

版权 © 2014–2020, Texas Instruments Incorporated

5.12.7 Universal Parallel Port (uPP) Interface

The uPP interface is a high-speed parallel interface with dedicated data lines and minimal control signals. The uPP interface is designed to interface cleanly with high-speed ADCs or DACs with 8-bit data width. It can also be interconnected with field-programmable gate arrays (FPGAs) or other uPP devices to achieve high-speed digital data transfer. It can operate in receive mode or transmit mode (simplex mode).

The uPP interface includes an internal DMA controller to maximize throughput and minimize CPU overhead during high-speed data transmission. All uPP transactions use internal DMA to feed data to or retrieve data from the I/O channels. Even though there is only one I/O channel, the DMA controller includes two DMA channels to support data interleave mode, in which all DMA resources service a single I/O channel.

On this device, the uPP interface is the dedicated resource for the CPU1 subsystem. CPU1, CPU1.CLA1, and CPU1.DMA have access to this module. Two dedicated 512-byte data RAMs (also known as MSG RAMs) are tightly coupled with the uPP module (one for each, TX and RX). These data RAMs are used to store the bulk of data to avoid frequent interruptions to the CPU. Only CPU1 and CPU1.CLA1 have access to these data RAMs. 图 5-76 shows the integration of the uPP on this device.

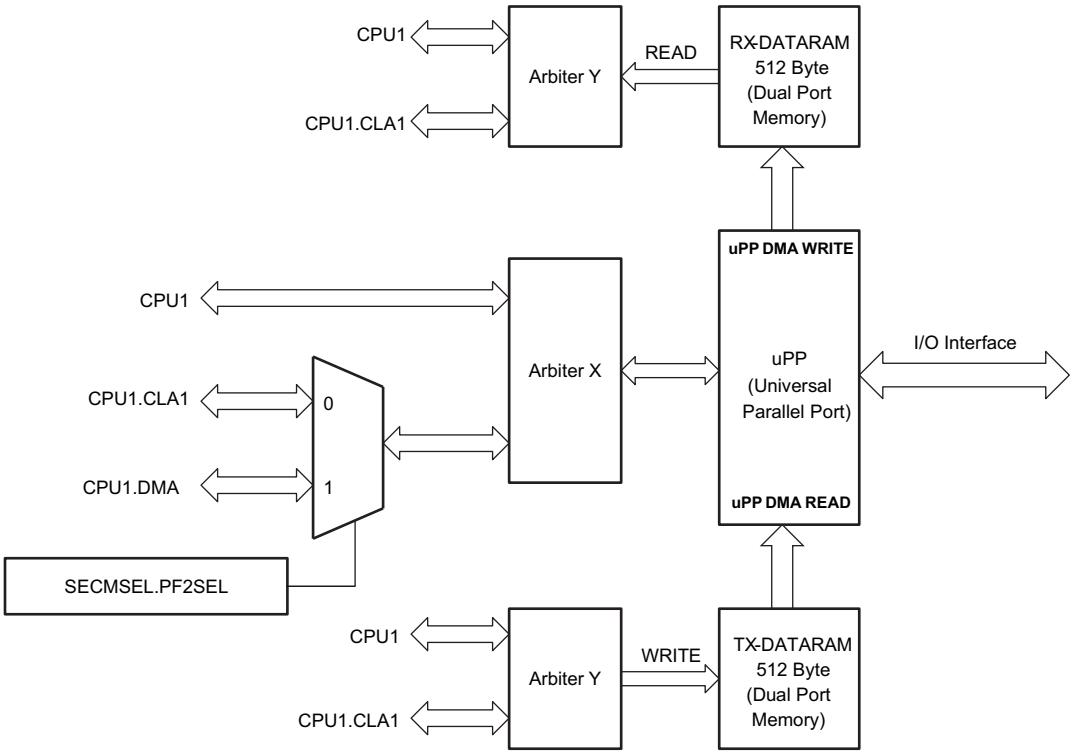

图 5-76. uPP Integration

注

On some TI devices, the uPP module is also called the Radio Peripheral Interface (RPI) module.

The uPP interface supports the following:

- Mainstream high-speed data converters with parallel conversion interface.
- Mainstream high-speed streaming interface with frame START indication.
- Mainstream high-speed streaming interface with data ENABLE indication.
- Mainstream high-speed streaming interface with synchronization WAIT signal.
- SDR (single-data-rate) or DDR (double-data-rate, interleaved) interface.
- Multiplexing of interleaved data in SDR transmit case.
- Demultiplexing and multiplexing of interleaved data in DDR case.
- I/O interface clock frequency up to 50 MHz for SDR, and 25 MHz for DDR.
- Single-channel 8-bit input receive or output transmit mode.
- Max throughput is 50MB/s for pure read or pure write.
- Available as a DSP to FPGA general-purpose streaming interface.

图 5-77 shows the uPP functional block diagram.

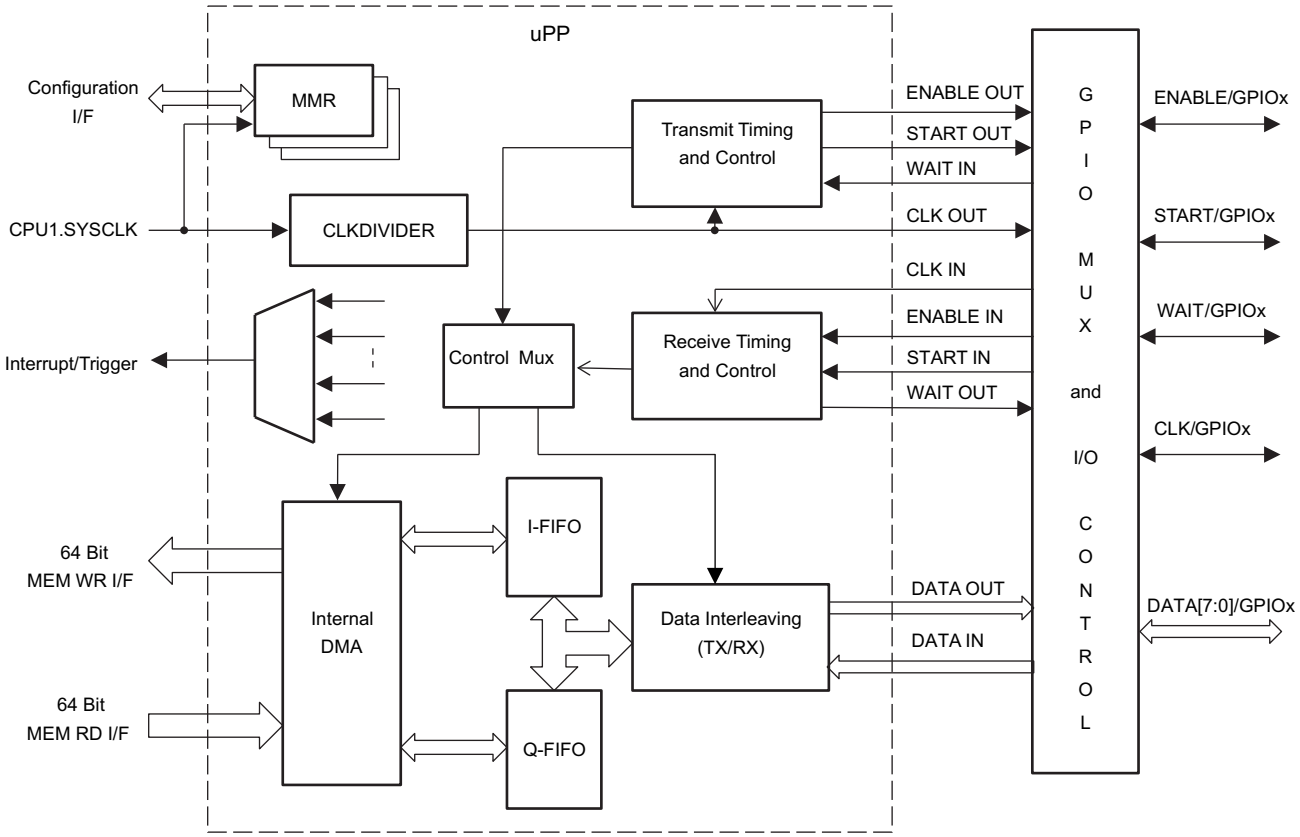

图 5-77. uPP Functional Block Diagram

版权 © 2014–2020, Texas Instruments Incorporated

5.12.7.1 uPP Electrical Data and Timing

Table 5-84 shows the uPP timing requirements. Table 5-85 shows the uPP switching characteristics. Figure 5-78 through Figure 5-81 show the uPP timing diagrams.

Table 5-84. uPP Timing Requirements

NO.				MIN	MAX	UNIT
1	$t_{c(CLK)}$	Cycle time, CLK	SDR mode	20		ns
			DDR mode	40		
2	$t_{w(CLKH)}$	Pulse width, CLK high	SDR mode	8		ns
			DDR mode	18		
3	$t_{w(CLKL)}$	Pulse width, CLK low	SDR mode	8		ns
			DDR mode	18		
4	$t_{su(STV-CLKH)}$	Setup time, START valid before CLK high		4		ns
5	$t_{h(CLKH-STV)}$	Hold time, START valid after CLK high		0.8		ns
6	$t_{su(ENV-CLKH)}$	Setup time, ENABLE valid before CLK high		4		ns
7	$t_{h(CLKH-ENV)}$	Hold time, ENABLE valid after CLK high		0.8		ns
8	$t_{su(DV-CLKH)}$	Setup time, DATA valid before CLK high		4		ns
9	$t_{h(CLKH-DV)}$	Hold time, DATA valid after CLK high		0.8		ns
10	$t_{su(DV-CLKL)}$	Setup time, DATA valid before CLK low		4		ns
11	$t_{h(CLKL-DV)}$	Hold time, DATA valid after CLK low		0.8		ns
19	$t_{su(WTV-CLKH)}$	Setup time, WAIT valid before CLK high	SDR mode	20		ns
20	$t_{h(CLKH-WTV)}$	Hold time, WAIT valid after CLK high	SDR mode	0		ns
21	$t_{su(WTV-CLKL)}$	Setup time, WAIT valid before CLK low	DDR mode	20		ns
22	$t_{h(CLKL-WTV)}$	Hold time, WAIT valid after CLK low	DDR mode	0		ns

Table 5-85. uPP Switching Characteristics

over recommended operating conditions (unless otherwise noted)

NO.	PARAMETER			MIN	MAX	UNIT
12	$t_{c(CLK)}$	Cycle time, CLK	SDR mode	20		ns
			DDR mode	40		
13	$t_{w(CLKH)}$	Pulse width, CLK high	SDR mode	8		ns
			DDR mode	18		
14	$t_{w(CLKL)}$	Pulse width, CLK low	SDR mode	8		ns
			DDR mode	18		
15	$t_{d(CLKH-STV)}$	Delay time, START valid after CLK high		3	12	ns
16	$t_{d(CLKH-ENV)}$	Delay time, ENABLE valid after CLK high		3	12	ns
17	$t_{d(CLKH-DV)}$	Delay time, DATA valid after CLK high		3	12	ns
18	$t_{d(CLKL-DV)}$	Delay time, DATA valid after CLK low		3	12	ns

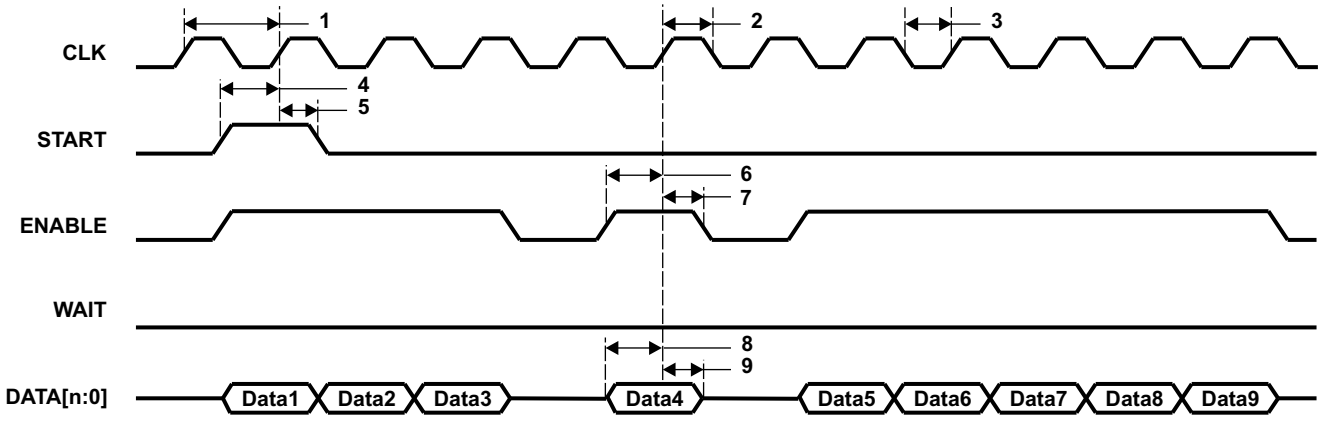

Figure 5-78. uPP Single Data Rate (SDR) Receive Timing

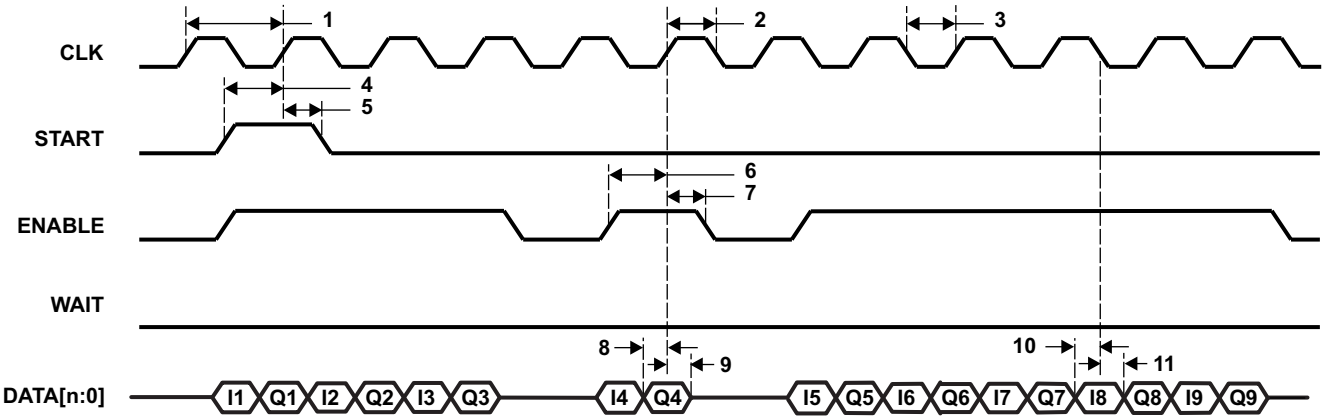

Figure 5-79. uPP Double Data Rate (DDR) Receive Timing

Copyright © 2014–2020, Texas Instruments Incorporated

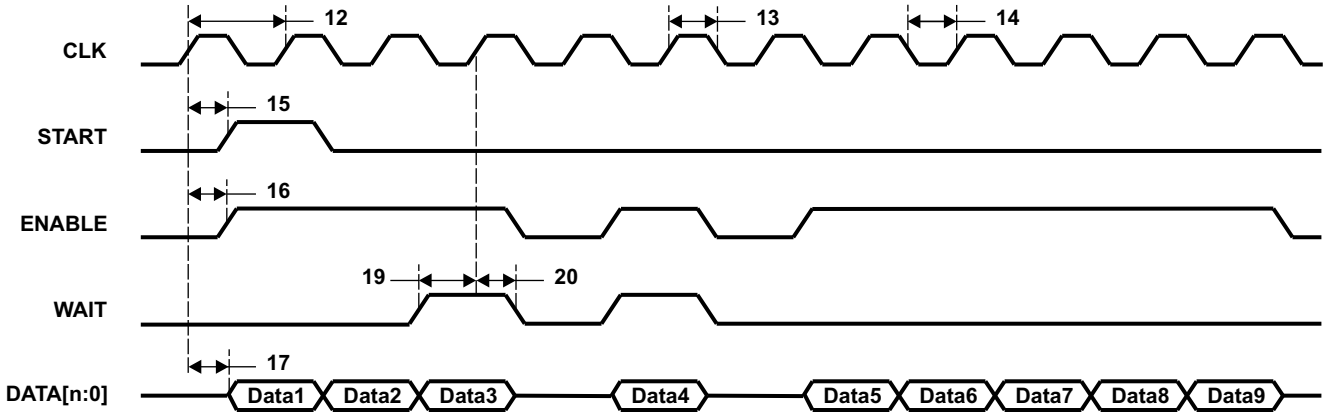

Figure 5-80. uPP Single Data Rate (SDR) Transmit Timing

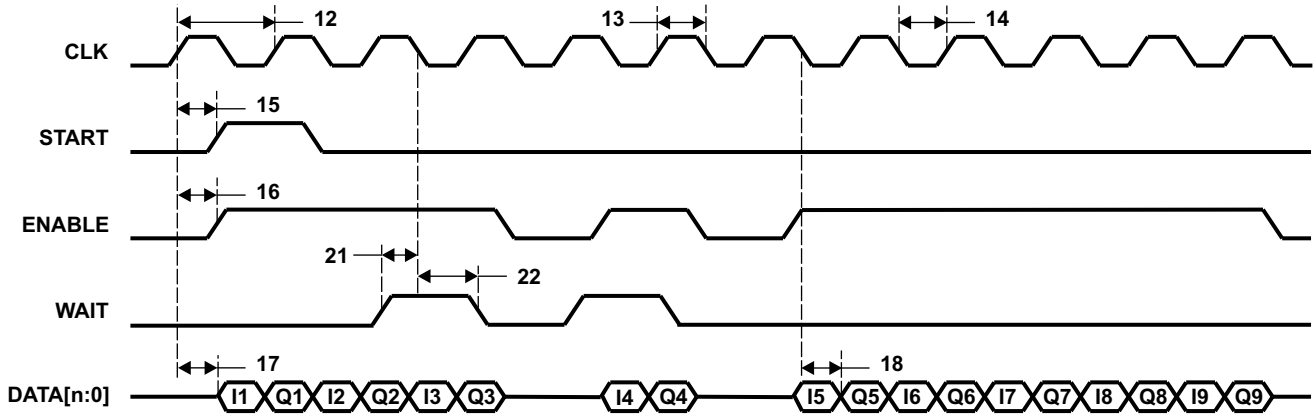

Figure 5-81. uPP Double Data Rate (DDR) Transmit Timing

6 Detailed Description

6.1 Overview

The TMS320F2837xS is a powerful 32-bit floating-point microcontroller unit (MCU) designed for advanced closed-loop control applications such as industrial motor drives; solar inverters and digital power; electrical vehicles and transportation; and sensing and signal processing. Complete development packages for digital power and industrial drives are available as part of the powerSUITE and DesignDRIVE initiatives.

The real-time control subsystem is based on TI's 32-bit C28x floating-point CPU, which provides 200 MHz of signal processing performance. The C28x CPU is further boosted by the new TMU accelerator, which enables fast execution of algorithms with trigonometric operations common in transforms and torque loop calculations; and the VCU accelerator, which reduces the time for complex math operations common in encoded applications.

The F2837xS microcontroller family features a CLA real-time control coprocessor. The CLA is an independent 32-bit floating-point processor that runs at the same speed as the main CPU. The CLA responds to peripheral triggers and executes code concurrently with the main C28x CPU. This parallel processing capability can effectively double the computational performance of a real-time control system. By using the CLA to service time-critical functions, the main C28x CPU is free to perform other tasks, such as communications and diagnostics.

The TMS320F2837xS supports up to 1MB (512KW) of onboard flash memory with error correction code (ECC) and up to 164KB (82KW) of SRAM. Two 128-bit secure zones are also available on the CPU for code protection.

Performance analog and control peripherals are also integrated on the F2837xS MCU to further enable system consolidation. Four independent 16-bit ADCs provide precise and efficient management of multiple analog signals, which ultimately boosts system throughput. The new sigma-delta filter module (SDFM) works in conjunction with the sigma-delta modulator to enable isolated current shunt measurements. The Comparator Subsystem (CMPSS) with windowed comparators allows for protection of power stages when current limit conditions are exceeded or not met. Other analog and control peripherals include DACs, PWMs, eCAPs, eQEPs, and other peripherals.

Peripherals such as EMIFs, CAN modules (ISO 11898-1/CAN 2.0B-compliant), and a new uPP interface extend the connectivity of the F2837xS. The uPP interface is a new feature of the C2000 MCUs and supports high-speed parallel connection to FPGAs or other processors with similar uPP interfaces. Lastly, a USB 2.0 port with MAC and PHY lets users easily add universal serial bus (USB) connectivity to their application.

6.2 Functional Block Diagram

图 6-1 shows the CPU system and associated peripherals.

版权 © 2014–2020, Texas Instruments Incorporated

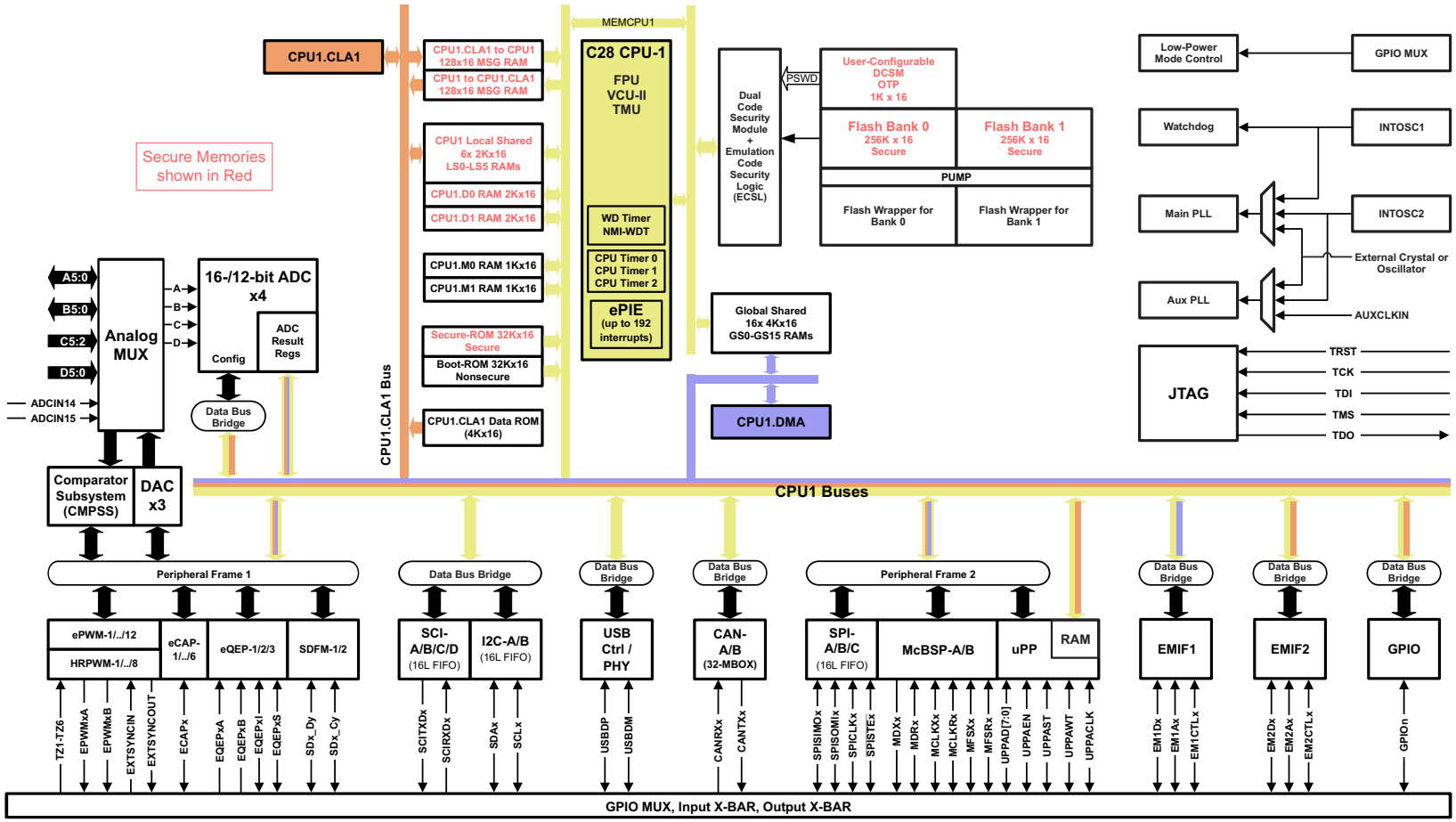

图 6-1. Functional Block Diagram

6.3 Memory

6.3.1 C28x Memory Map

The C28x memory map is described in 表 6-1. Memories accessible by the CLA or DMA (direct memory access) are noted as well.

表 6-1. C28x Memory Map

MEMORY	SIZE	START ADDRESS	END ADDRESS	CLA ACCESS	DMA ACCESS
M0 RAM	1K × 16	0x0000 0000	0x0000 03FF		
M1 RAM	1K × 16	0x0000 0400	0x0000 07FF		
PieVectTable	512 × 16	0x0000 0D00	0x0000 0EFF		
CLA to CPU MSGRAM	128 × 16	0x0000 1480	0x0000 14FF	Yes	
CPU to CLA MSGRAM	128 × 16	0x0000 1500	0x0000 157F	Yes	
UPP TX MSG RAM	512 × 16	0x0000 6C00	0x0000 6DFF	Yes	
UPP RX MSG RAM	512 × 16	0x0000 6E00	0x0000 6FFF	Yes	
LS0 RAM	2K × 16	0x0000 8000	0x0000 87FF	Yes	
LS1 RAM	2K × 16	0x0000 8800	0x0000 8FFF	Yes	
LS2 RAM	2K × 16	0x0000 9000	0x0000 97FF	Yes	
LS3 RAM	2K × 16	0x0000 9800	0x0000 9FFF	Yes	
LS4 RAM	2K × 16	0x0000 A000	0x0000 A7FF	Yes	
LS5 RAM	2K × 16	0x0000 A800	0x0000 AFFF	Yes	
D0 RAM	2K × 16	0x0000 B000	0x0000 B7FF		
D1 RAM	2K × 16	0x0000 B800	0x0000 BFFF		
GS0 RAM	4K × 16	0x0000 C000	0x0000 CFFF		Yes
GS1 RAM	4K × 16	0x0000 D000	0x0000 DFFF		Yes
GS2 RAM	4K × 16	0x0000 E000	0x0000 EFFF		Yes
GS3 RAM	4K × 16	0x0000 F000	0x0000 FFFF		Yes
GS4 RAM	4K × 16	0x0001 0000	0x0001 0FFF		Yes
GS5 RAM	4K × 16	0x0001 1000	0x0001 1FFF		Yes
GS6 RAM	4K × 16	0x0001 2000	0x0001 2FFF		Yes
GS7 RAM	4K × 16	0x0001 3000	0x0001 3FFF		Yes
GS8 RAM	4K × 16	0x0001 4000	0x0001 4FFF		Yes
GS9 RAM	4K × 16	0x0001 5000	0x0001 5FFF		Yes
GS10 RAM	4K × 16	0x0001 6000	0x0001 6FFF		Yes
GS11 RAM	4K × 16	0x0001 7000	0x0001 7FFF		Yes
GS12 RAM (1)	4K × 16	0x0001 8000	0x0001 8FFF		Yes
GS13 RAM (1)	4K × 16	0x0001 9000	0x0001 9FFF		Yes
GS14 RAM (1)	4K × 16	0x0001 A000	0x0001 AFFF		Yes
GS15 RAM (1)	4K × 16	0x0001 B000	0x0001 BFFF		Yes
CAN A Message RAM	2K × 16	0x0004 9000	0x0004 97FF		
CAN B Message RAM	2K × 16	0x0004 B000	0x0004 B7FF		
Flash Bank 0	256K × 16	0x0008 0000	0x000B FFFF		
Flash Bank 1	256K × 16	0x000C 0000	0x000F FFFF		
Secure ROM	32K × 16	0x003F 0000	0x003F 7FFF		
Boot ROM	32K × 16	0x003F 8000	0x003F FFBF		
Vectors	64 × 16	0x003F FFC0	0x003F FFFF		

(1) Available only on F28379S, F28378S, F28377S, and F28375S.

版权 © 2014–2020, Texas Instruments Incorporated

6.3.2 Flash Memory Map

The F28379S, F28378S, F28377S, and F28375S devices have two flash banks [512KB (256KW) each] for a total of 1MB (512KW). Only one bank can be programmed or erased at a time. The Flash API can be executed from RAM, or since there are two Flash banks for one CPU, the Flash API code can be executed from one bank to erase/program the other bank. Note that an extra wait state is automatically added when code is fetched or data is read from Bank 1 (compared to that of Bank 0), even for prefetched data. See 节 5.9.4 for details on flash wait states. Table 6-2 shows the addresses of flash sectors on F28379S, F28378S, F28377S, and F28375S.

Table 6-2. Addresses of Flash Sectors on F28379S, F28378S, F28377S, and F28375S

SECTOR	SIZE	START ADDRESS	END ADDRESS
OTP Sectors			
TI OTP	1K x 16	0x0007 0000	0x0007 03FF
Reserved(1)	1K x 16	0x0007 0800	0x0007 0BFF
User configurable DCSM OTP Bank 0	1K x 16	0x0007 8000	0x0007 83FF
Reserved	1K x 16	0x0007 8800	0x0007 8BFF
Bank 0 Sectors			
Sector 0	8K x 16	0x0008 0000	0x0008 1FFF
Sector 1	8K x 16	0x0008 2000	0x0008 3FFF
Sector 2	8K x 16	0x0008 4000	0x0008 5FFF
Sector 3	8K x 16	0x0008 6000	0x0008 7FFF
Sector 4	32K x 16	0x0008 8000	0x0008 FFFF
Sector 5	32K x 16	0x0009 0000	0x0009 7FFF
Sector 6	32K x 16	0x0009 8000	0x0009 FFFF
Sector 7	32K x 16	0x000A 0000	0x000A 7FFF
Sector 8	32K x 16	0x000A 8000	0x000A FFFF
Sector 9	32K x 16	0x000B 0000	0x000B 7FFF
Sector 10	8K x 16	0x000B 8000	0x000B 9FFF
Sector 11	8K x 16	0x000B A000	0x000B BFFF
Sector 12	8K x 16	0x000B C000	0x000B DFFF
Sector 13	8K x 16	0x000B E000	0x000B FFFF
Bank 1 Sectors			
Sector 14	8K x 16	0x000C 0000	0x000C 1FFF
Sector 15	8K x 16	0x000C 2000	0x000C 3FFF
Sector 16	8K x 16	0x000C 4000	0x000C 5FFF
Sector 17	8K x 16	0x000C 6000	0x000C 7FFF
Sector 18	32K x 16	0x000C 8000	0x000C FFFF
Sector 19	32K x 16	0x000D 0000	0x000D 7FFF
Sector 20	32K x 16	0x000D 8000	0x000D FFFF
Sector 21	32K x 16	0x000E 0000	0x000E 7FFF
Sector 22	32K x 16	0x000E 8000	0x000E FFFF
Sector 23	32K x 16	0x000F 0000	0x000F 7FFF
Sector 24	8K x 16	0x000F 8000	0x000F 9FFF
Sector 25	8K x 16	0x000F A000	0x000F BFFF
Sector 26	8K x 16	0x000F C000	0x000F DFFF
Sector 27	8K x 16	0x000F E000	0x000F FFFF
Flash ECC Locations			
TI OTP ECC	128 x 16	0x0107 0000	0x0107 007F

(1) Any kind of access to this region may result in a spurious ECC error event.

Table 6-2. Addresses of Flash Sectors on F28379S, F28378S, F28377S, and F28375S (continued)

SECTOR	SIZE	START ADDRESS	END ADDRESS
Reserved	128 x 16	0x0107 0200	0x0107 027F
User-configurable DCSM OTP ECC Bank 0	128 x 16	0x0107 1000	0x0107 107F
Reserved	128 x 16	0x0107 1200	0x0107 127F
Flash ECC (Sector 0)	1K x 16	0x0108 0000	0x0108 03FF
Flash ECC (Sector 1)	1K x 16	0x0108 0400	0x0108 07FF
Flash ECC (Sector 2)	1K x 16	0x0108 0800	0x0108 0BFF
Flash ECC (Sector 3)	1K x 16	0x0108 0C00	0x0108 0FFF
Flash ECC (Sector 4)	4K x 16	0x0108 1000	0x0108 1FFF
Flash ECC (Sector 5)	4K x 16	0x0108 2000	0x0108 2FFF
Flash ECC (Sector 6)	4K x 16	0x0108 3000	0x0108 3FFF
Flash ECC (Sector 7)	4K x 16	0x0108 4000	0x0108 4FFF
Flash ECC (Sector 8)	4K x 16	0x0108 5000	0x0108 5FFF
Flash ECC (Sector 9)	4K x 16	0x0108 6000	0x0108 6FFF
Flash ECC (Sector 10)	1K x 16	0x0108 7000	0x0108 73FF
Flash ECC (Sector 11)	1K x 16	0x0108 7400	0x0108 77FF
Flash ECC (Sector 12)	1K x 16	0x0108 7800	0x0108 7BFF
Flash ECC (Sector 13)	1K x 16	0x0108 7C00	0x0108 7FFF
Flash ECC (Sector 14)	1K x 16	0x0108 0000	0x0108 03FF
Flash ECC (Sector 15)	1K x 16	0x0108 0400	0x0108 07FF
Flash ECC (Sector 16)	1K x 16	0x0108 0800	0x0108 0BFF
Flash ECC (Sector 17)	1K x 16	0x0108 0C00	0x0108 0FFF
Flash ECC (Sector 18)	4K x 16	0x0108 1000	0x0108 1FFF
Flash ECC (Sector 19)	4K x 16	0x0108 2000	0x0108 2FFF
Flash ECC (Sector 20)	4K x 16	0x0108 3000	0x0108 3FFF
Flash ECC (Sector 21)	4K x 16	0x0108 4000	0x0108 4FFF
Flash ECC (Sector 22)	4K x 16	0x0108 5000	0x0108 5FFF
Flash ECC (Sector 23)	4K x 16	0x0108 6000	0x0108 6FFF
Flash ECC (Sector 24)	1K x 16	0x0108 7000	0x0108 73FF
Flash ECC (Sector 25)	1K x 16	0x0108 7400	0x0108 77FF
Flash ECC (Sector 26)	1K x 16	0x0108 7800	0x0108 7BFF
Flash ECC (Sector 27)	1K x 16	0x0108 7C00	0x0108 7FFF

版权 © 2014–2020, Texas Instruments Incorporated

The F28376S and F28374S devices have one flash bank of 512KB (256KW) and the code to program the flash should be executed out of RAM. See 节 5.9.4 for details on flash wait states. Table 6-3 shows the addresses of flash sectors on F28376S and F28374S.

Table 6-3. Addresses of Flash Sectors on F28376S and F28374S

SECTOR	SIZE	START ADDRESS	END ADDRESS
OTP Sectors			
TI OTP Bank 0	1K x 16	0x0007 0000	0x0007 03FF
User configurable DCSM OTP Bank 0	1K x 16	0x0007 8000	0x0007 83FF
Sectors			
Sector 0	8K x 16	0x0008 0000	0x0008 1FFF
Sector 1	8K x 16	0x0008 2000	0x0008 3FFF
Sector 2	8K x 16	0x0008 4000	0x0008 5FFF
Sector 3	8K x 16	0x0008 6000	0x0008 7FFF
Sector 4	32K x 16	0x0008 8000	0x0008 FFFF
Sector 5	32K x 16	0x0009 0000	0x0009 7FFF
Sector 6	32K x 16	0x0009 8000	0x0009 FFFF
Sector 7	32K x 16	0x000A 0000	0x000A 7FFF
Sector 8	32K x 16	0x000A 8000	0x000A FFFF
Sector 9	32K x 16	0x000B 0000	0x000B 7FFF
Sector 10	8K x 16	0x000B 8000	0x000B 9FFF
Sector 11	8K x 16	0x000B A000	0x000B BFFF
Sector 12	8K x 16	0x000B C000	0x000B DFFF
Sector 13	8K x 16	0x000B E000	0x000B FFFF
Flash ECC Locations			
TI OTP ECC Bank 0	128 x 16	0x0107 0000	0x0107 007F
User-configurable DCSM OTP ECC Bank 0	128 x 16	0x0107 1000	0x0107 107F
Flash ECC (Sector 0)	1K x 16	0x0108 0000	0x0108 03FF
Flash ECC (Sector 1)	1K x 16	0x0108 0400	0x0108 07FF
Flash ECC (Sector 2)	1K x 16	0x0108 0800	0x0108 0BFF
Flash ECC (Sector 3)	1K x 16	0x0108 0C00	0x0108 0FFF
Flash ECC (Sector 4)	4K x 16	0x0108 1000	0x0108 1FFF
Flash ECC (Sector 5)	4K x 16	0x0108 2000	0x0108 2FFF
Flash ECC (Sector 6)	4K x 16	0x0108 3000	0x0108 3FFF
Flash ECC (Sector 7)	4K x 16	0x0108 4000	0x0108 4FFF
Flash ECC (Sector 8)	4K x 16	0x0108 5000	0x0108 5FFF
Flash ECC (Sector 9)	4K x 16	0x0108 6000	0x0108 6FFF
Flash ECC (Sector 10)	1K x 16	0x0108 7000	0x0108 73FF
Flash ECC (Sector 11)	1K x 16	0x0108 7400	0x0108 77FF
Flash ECC (Sector 12)	1K x 16	0x0108 7800	0x0108 7BFF
Flash ECC (Sector 13)	1K x 16	0x0108 7C00	0x0108 7FFF

6.3.3 EMIF Chip Select Memory Map

The EMIF memory map is shown in 表 6-4.

表 6-4. EMIF Chip Select Memory Map

EMIF CHIP SELECT	SIZE (1)	START ADDRESS	END ADDRESS	CLA ACCESS	DMA ACCESS
EMIF1_CS0n - Data	256M × 16	0x8000 0000	0x8FFF FFFF		Yes
EMIF1_CS2n - Program + Data (2)	2M × 16	0x0010 0000	0x002F FFFF		Yes
EMIF1_CS3n - Program + Data	512K × 16	0x0030 0000	0x0037 FFFF		Yes
EMIF1_CS4n - Program + Data	393K × 16	0x0038 0000	0x003D FFFF		Yes
EMIF2_CS0n - Data	3M × 16	0x9000 0000	0x91FF FFFF		
EMIF2_CS2n - Program + Data	4K × 16	0x0000 2000	0x0000 2FFF	Yes (Data only)	

(1) Available memory size listed in this table is the maximum possible size assuming 32-bit memory. This may not apply to other memory sizes because of pin mux setting. See Section 4.4.1 to find the available address lines for your use case.
(2) The 2M × 16 size is for a 32-bit interface with the assumption that 16-bit accesses are not performed; hence, byte enables are not used (tied to active value on board). If byte enables are used, then the maximum size is smaller because byte enables are muxed with address pins (see Section 4.4.1). If 16-bit memory is used, then the maximum size is 1M × 16.

6.3.4 Peripheral Registers Memory Map

The peripheral registers memory map can be found in 表 6-5. Registers in the peripheral frames share a secondary master (CLA or DMA) selection with all other registers within the same peripheral frame. See the *TMS320F2837xS Microcontrollers Technical Reference Manual* for details on the CPU subsystem and secondary master selection.

表 6-5. Peripheral Registers Memory Map

REGISTERS	STRUCTURE NAME	START ADDRESS	END ADDRESS	PROTECTED (1)	CLA ACCESS	DMA ACCESS
AdcaResultRegs	ADC_RESULT_REGS	0x0000 0B00	0x0000 0B1F		Yes	Yes
AdcbResultRegs	ADC_RESULT_REGS	0x0000 0B20	0x0000 0B3F		Yes	Yes
AdccResultRegs	ADC_RESULT_REGS	0x0000 0B40	0x0000 0B5F		Yes	Yes
AdcdResultRegs	ADC_RESULT_REGS	0x0000 0B60	0x0000 0B7F		Yes	Yes
CpuTimer0Regs	CPUTIMER_REGS	0x0000 0C00	0x0000 0C07			
CpuTimer1Regs	CPUTIMER_REGS	0x0000 0C08	0x0000 0C0F			
CpuTimer2Regs	CPUTIMER_REGS	0x0000 0C10	0x0000 0C17			
PieCtrlRegs	PIE_CTRL_REGS	0x0000 0CE0	0x0000 0CFF			
Cla1SoftIntRegs	CLA_SOFTINT_REGS	0x0000 0CE0	0x0000 0CFF		Yes – CLA only, no CPU access	
DmaRegs	DMA_REGS	0x0000 1000	0x0000 11FF			
Cla1Regs	CLA_REGS	0x0000 1400	0x0000 147F			
Peripheral Frame 1						
EPwm1Regs	EPWM_REGS	0x0000 4000	0x0000 40FF	Yes	Yes	Yes
EPwm2Regs	EPWM_REGS	0x0000 4100	0x0000 41FF	Yes	Yes	Yes
EPwm3Regs	EPWM_REGS	0x0000 4200	0x0000 42FF	Yes	Yes	Yes
EPwm4Regs	EPWM_REGS	0x0000 4300	0x0000 43FF	Yes	Yes	Yes
EPwm5Regs	EPWM_REGS	0x0000 4400	0x0000 44FF	Yes	Yes	Yes
EPwm6Regs	EPWM_REGS	0x0000 4500	0x0000 45FF	Yes	Yes	Yes
EPwm7Regs	EPWM_REGS	0x0000 4600	0x0000 46FF	Yes	Yes	Yes
EPwm8Regs	EPWM_REGS	0x0000 4700	0x0000 47FF	Yes	Yes	Yes
EPwm9Regs	EPWM_REGS	0x0000 4800	0x0000 48FF	Yes	Yes	Yes
EPwm10Regs	EPWM_REGS	0x0000 4900	0x0000 49FF	Yes	Yes	Yes
EPwm11Regs	EPWM_REGS	0x0000 4A00	0x0000 4AFF	Yes	Yes	Yes
EPwm12Regs	EPWM_REGS	0x0000 4B00	0x0000 4BFF	Yes	Yes	Yes
ECap1Regs	ECAP_REGS	0x0000 5000	0x0000 501F	Yes	Yes	Yes

版权 © 2014–2020, Texas Instruments Incorporated

表 6-5. Peripheral Registers Memory Map (continued)

REGISTERS	STRUCTURE NAME	START ADDRESS	END ADDRESS	PROTECTED[(1)]	CLA ACCESS	DMA ACCESS
ECap2Regs	ECAP_REGS	0x0000 5020	0x0000 503F	Yes	Yes	Yes
ECap3Regs	ECAP_REGS	0x0000 5040	0x0000 505F	Yes	Yes	Yes
ECap4Regs	ECAP_REGS	0x0000 5060	0x0000 507F	Yes	Yes	Yes
ECap5Regs	ECAP_REGS	0x0000 5080	0x0000 509F	Yes	Yes	Yes
ECap6Regs	ECAP_REGS	0x0000 50A0	0x0000 50BF	Yes	Yes	Yes
EQep1Regs	EQEP_REGS	0x0000 5100	0x0000 513F	Yes	Yes	Yes
EQep2Regs	EQEP_REGS	0x0000 5140	0x0000 517F	Yes	Yes	Yes
EQep3Regs	EQEP_REGS	0x0000 5180	0x0000 51BF	Yes	Yes	Yes
DacaRegs	DAC_REGS	0x0000 5C00	0x0000 5C0F	Yes	Yes	Yes
DacbRegs	DAC_REGS	0x0000 5C10	0x0000 5C1F	Yes	Yes	Yes
DaccRegs	DAC_REGS	0x0000 5C20	0x0000 5C2F	Yes	Yes	Yes
Cmpss1Regs	CMPSS_REGS	0x0000 5C80	0x0000 5C9F	Yes	Yes	Yes
Cmpss2Regs	CMPSS_REGS	0x0000 5CA0	0x0000 5CBF	Yes	Yes	Yes
Cmpss3Regs	CMPSS_REGS	0x0000 5CC0	0x0000 5CDF	Yes	Yes	Yes
Cmpss4Regs	CMPSS_REGS	0x0000 5CE0	0x0000 5CFF	Yes	Yes	Yes
Cmpss5Regs	CMPSS_REGS	0x0000 5D00	0x0000 5D1F	Yes	Yes	Yes
Cmpss6Regs	CMPSS_REGS	0x0000 5D20	0x0000 5D3F	Yes	Yes	Yes
Cmpss7Regs	CMPSS_REGS	0x0000 5D40	0x0000 5D5F	Yes	Yes	Yes
Cmpss8Regs	CMPSS_REGS	0x0000 5D60	0x0000 5D7F	Yes	Yes	Yes
Sdfm1Regs	SDFM_REGS	0x0000 5E00	0x0000 5E7F	Yes	Yes	Yes
Sdfm2Regs	SDFM_REGS	0x0000 5E80	0x0000 5EFF	Yes	Yes	Yes
Peripheral Frame 2						
McbspaRegs	MCBSP_REGS	0x0000 6000	0x0000 603F	Yes	Yes	Yes
McbspbRegs	MCBSP_REGS	0x0000 6040	0x0000 607F	Yes	Yes	Yes
SpiaRegs	SPI_REGS	0x0000 6100	0x0000 610F	Yes	Yes	Yes
SpibRegs	SPI_REGS	0x0000 6110	0x0000 611F	Yes	Yes	Yes
SpicRegs	SPI_REGS	0x0000 6120	0x0000 612F	Yes	Yes	Yes
UppRegs	UPP_REGS	0x0000 6200	0x0000 62FF	Yes	Yes	Yes
WdRegs	WD_REGS	0x0000 7000	0x0000 703F	Yes		
NmiIntruptRegs	NMI_INTRUPT_REGS	0x0000 7060	0x0000 706F	Yes		
XintRegs	XINT_REGS	0x0000 7070	0x0000 707F	Yes		
SciaRegs	SCI_REGS	0x0000 7200	0x0000 720F	Yes		
ScibRegs	SCI_REGS	0x0000 7210	0x0000 721F	Yes		
ScicRegs	SCI_REGS	0x0000 7220	0x0000 722F	Yes		
ScidRegs	SCI_REGS	0x0000 7230	0x0000 723F	Yes		
I2caRegs	I2C_REGS	0x0000 7300	0x0000 733F	Yes		
I2cbRegs	I2C_REGS	0x0000 7340	0x0000 737F	Yes		
AdcaRegs	ADC_REGS	0x0000 7400	0x0000 747F	Yes	Yes	
AdcbRegs	ADC_REGS	0x0000 7480	0x0000 74FF	Yes	Yes	
AdccRegs	ADC_REGS	0x0000 7500	0x0000 757F	Yes	Yes	
AdcdRegs	ADC_REGS	0x0000 7580	0x0000 75FF	Yes	Yes	
InputXbarRegs	INPUT_XBAR_REGS	0x0000 7900	0x0000 791F	Yes		
XbarRegs	XBAR_REGS	0x0000 7920	0x0000 793F	Yes		
TrigRegs	TRIG_REGS	0x0000 7940	0x0000 794F	Yes		
DmaClaSrcSelRegs	DMA_CLA_SRC_SEL_REGS	0x0000 7980	0x0000 798F	Yes		
EPwmXbarRegs	EPWM_XBAR_REGS	0x0000 7A00	0x0000 7A3F	Yes		
OutputXbarRegs	OUTPUT_XBAR_REGS	0x0000 7A80	0x0000 7ABF	Yes		
GpioCtrlRegs	GPIO_CTRL_REGS	0x0000 7C00	0x0000 7D7F	Yes		
GpioDataRegs	GPIO_DATA_REGS	0x0000 7F00	0x0000 7F2F	Yes	Yes	
UsbaRegs	USB_REGS	0x0004 0000	0x0004 0FFF	Yes		

表 6-5. Peripheral Registers Memory Map (continued)

REGISTERS	STRUCTURE NAME	START ADDRESS	END ADDRESS	PROTECTED[(1)]	CLA ACCESS	DMA ACCESS
Emif1Regs	EMIF_REGS	0x0004 7000	0x0004 77FF	Yes		
Emif2Regs	EMIF_REGS	0x0004 7800	0x0004 7FFF	Yes		
CanaRegs	CAN_REGS	0x0004 8000	0x0004 87FF	Yes		
CanbRegs	CAN_REGS	0x0004 A000	0x0004 A7FF	Yes		
FlashPumpSemaphoreRegs	FLASH_PUMP_SEMAPHORE_REGS	0x0005 0024	0x0005 0025	Yes		
DevCfgRegs	DEV_CFG_REGS	0x0005 D000	0x0005 D17F	Yes		
AnalogSubsysRegs	ANALOG_SUBSYS_REGS	0x0005 D180	0x0005 D1FF	Yes		
ClkCfgRegs	CLK_CFG_REGS	0x0005 D200	0x0005 D2FF	Yes		
CpuSysRegs	CPU_SYS_REGS	0x0005 D300	0x0005 D3FF	Yes		
RomPrefetchRegs	ROM_PREFETCH_REGS	0x0005 E608	0x0005 E60B	Yes		
DcsmZ1Regs	DCSM_Z1_REGS	0x0005 F000	0x0005 F02F	Yes		
DcsmZ2Regs	DCSM_Z2_REGS	0x0005 F040	0x0005 F05F	Yes		
DcsmCommonRegs	DCSM_COMMON_REGS	0x0005 F070	0x0005 F07F	Yes		
MemCfgRegs	MEM_CFG_REGS	0x0005 F400	0x0005 F47F	Yes		
Emif1ConfigRegs	EMIF1_CONFIG_REGS	0x0005 F480	0x0005 F49F	Yes		
Emif2ConfigRegs	EMIF2_CONFIG_REGS	0x0005 F4A0	0x0005 F4BF	Yes		
AccessProtectionRegs	ACCESS_PROTECTION_REGS	0x0005 F4C0	0x0005 F4FF	Yes		
MemoryErrorRegs	MEMORY_ERROR_REGS	0x0005 F500	0x0005 F53F	Yes		
RomWaitStateRegs	ROM_WAIT_STATE_REGS	0x0005 F540	0x0005 F541	Yes		
Flash0CtrlRegs	FLASH_CTRL_REGS	0x0005 F800	0x0005 FAFF	Yes		
Flash0EccRegs	FLASH_ECC_REGS	0x0005 FB00	0x0005 FB3F	Yes		
Flash1CtrlRegs	FLASH_CTRL_REGS	0x0005 FC00	0x0005 FEFF	Yes		
Flash1EccRegs	FLASH_ECC_REGS	0x0005 FF00	0x0005 FF3F	Yes		

(1) The CPU (not applicable for CLA or DMA) contains a write followed by read protection mode to ensure that any read operation that follows a write operation within a protected address range is executed as written by delaying the read operation until the write is initiated.

版权 © 2014–2020, Texas Instruments Incorporated

6.3.5 Memory Types

表 6-6 provides more information about each memory type.

表 6-6. Memory Types

MEMORY TYPE	ECC-CAPABLE	PARITY	SECURITY	HIBERNATE RETENTION	ACCESS PROTECTION
M0, M1	Yes	–	–	Yes	–
D0, D1	Yes	–	Yes	–	Yes
LSx	–	Yes	Yes	–	Yes
GSx	–	Yes	–	–	Yes
CPU/CLA MSGRAM	–	Yes	Yes	–	Yes
Boot ROM	–	–	–	N/A	–
Secure ROM	–	–	Yes	N/A	–
Flash	Yes	–	Yes	N/A	N/A
User-configurable DCSM OTP	Yes	–	Yes	N/A	N/A

6.3.5.1 Dedicated RAM (Mx and Dx RAM)

The CPU subsystem has four dedicated ECC-capable RAM blocks: M0, M1, D0, and D1. M0/M1 memories are small nonsecure blocks that are tightly coupled with the CPU (that is, only the CPU has access to them). D0/D1 memories are secure blocks and also have the access-protection feature (CPU write/CPU fetch protection).

6.3.5.2 Local Shared RAM (LSx RAM)

RAM blocks which are dedicated to each subsystem and are accessible to its CPU and CLA only, are called local shared RAMs (LSx RAMs).

All LSx RAM blocks have parity. These memories are secure and have the access protection (CPU write/CPU fetch) feature.

By default, these memories are dedicated to the CPU only, and the user could choose to share these memories with the CLA by configuring the MSEL_LSx bit field in the LSxMSEL registers appropriately.

表 6-7 shows the master access for the LSx RAM.

表 6-7. Master Access for LSx RAM (With Assumption That all Other Access Protections are Disabled)

MSEL_LSx	CLAPGM_LSx	CPU ALLOWED ACCESS	CLA ALLOWED ACCESS	COMMENT
00	X	All	–	LSx memory is configured as CPU dedicated RAM.
01	0	All	Data Read Data Write	LSx memory is shared between CPU and CLA1.
01	1	Emulation Read Emulation Write	Fetch Only	LSx memory is CLA1 program memory.

6.3.5.3 Global Shared RAM (GSx RAM)

RAM blocks which are accessible from both the CPU and DMA are called global shared RAMs (GSx RAMs). Both the CPU and DMA have full read and write access to these memories.

All GSx RAM blocks have parity.

The GSx RAMs have access protection (CPU write/CPU fetch/DMA write).

6.3.5.4 CLA Message RAM (CLA MSGRAM)

These RAM blocks can be used to share data between the CPU and CLA. The CLA has read and write access to the "CLA to CPU MSGRAM." The CPU has read and write access to the "CPU to CLA MSGRAM." The CPU and CLA both have read access to both MSGRAMs.

This RAM has parity.

版权 © 2014–2020, Texas Instruments Incorporated

6.4 Identification

表 6-8 shows the Device Identification Registers.

表 6-8. Device Identification Registers

NAME	ADDRESS	SIZE (x16)	DESCRIPTION	
PARTIDH	0x0005 D00A	2	Device part identification number(1)	
			TMS320F28379S	0x**F9 0400
			TMS320F28378S	0x**FA 0400
			TMS320F28377S	0x**FF 0400
			TMS320F28376S	0x**FE 0400
			TMS320F28375S	0x**FD 0400
			TMS320F28374S	0x**FC 0400
REVID	0x0005 D00C	2	Silicon revision number	
			Revision B	0x0000 0002
			Revision C	0x0000 0003
UID_UNIQUE	0x0007 03CC	2	Unique identification number. This number is different on each individual device with the same PARTIDH. This can be used as a serial number in the application. This number is present only on TMS Revision C devices.	
JTAG ID	N/A	N/A	JTAG Device ID	0x0B99 C02F

(1) PARTIDH may have one of two values for each part number, with the eight most significant bits identified with '**' above being 0x00 or 0x02.

6.5 Bus Architecture – Peripheral Connectivity

表 6-9 shows a broad view of the peripheral and configuration register accessibility from each bus master. Peripherals within peripheral frames 1 or 2 will all be mapped to the respective secondary master as a group (if SPI is assigned to CPU1.DMA, then McBSP is also assigned to CPU1.DMA).

表 6-9. Bus Master Peripheral Access

PERIPHERALS (BY BUS ACCESS TYPE)	CPU1.DMA	CPU1.CLA1	CPU1
Peripheral Frame 1: • ePWM/HRPWM • SDFM • eCAP (1) • eQEP (1) • CMPSS (1) • DAC (1)	Y	Y	Y
Peripheral Frame 2: • SPI • McBSP • uPP (1)	Y	Y	Y
SCI			Y
I2C			Y
CAN			Y
ADC Configuration		Y	Y
EMIF1	Y		Y
EMIF2		Y	Y
USB			Y
Device Capability, Peripheral Reset, Peripheral CPU Select			Y
GPIO Pin Mapping and Configuration			Y
Analog System Control			Y
uPP Message RAMs		Y	Y
Reset Configuration			Y
Clock and PLL Configuration			Y
System Configuration (WD, NMIWD, LPM, Peripheral Clock Gating)			Y
Flash Configuration			Y
CPU Timers			Y
DMA and CLA Trigger Source Select			Y
GPIO Data (2)		Y	Y
ADC Results	Y	Y	Y

(1) These modules are on a Peripheral Frame with DMA access; however, they cannot trigger a DMA transfer.
(2) The GPIO Data Registers are unique for each CPU1 and CPU1.CLAx. When the GPIO Pin Mapping Register is configured to assign a GPIO to a particular master, the respective GPIO Data Register will control the GPIO. See the General-Purpose Input/Output (GPIO) chapter of the *TMS320F2837xS Microcontrollers Technical Reference Manual* for more details.

版权 © 2014–2020, Texas Instruments Incorporated

6.6 C28x Processor

The CPU is a 32-bit fixed-point processor. This device draws from the best features of digital signal processing; reduced instruction set computing (RISC); and microcontroller architectures, firmware, and tool sets.

The CPU features include a modified Harvard architecture and circular addressing. The RISC features are single-cycle instruction execution, register-to-register operations, and modified Harvard architecture. The microcontroller features include ease of use through an intuitive instruction set, byte packing and unpacking, and bit manipulation. The modified Harvard architecture of the CPU enables instruction and data fetches to be performed in parallel. The CPU can read instructions and data while it writes data simultaneously to maintain the single-cycle instruction operation across the pipeline. The CPU does this over six separate address/data buses.

For more information on CPU architecture and instruction set, see the *TMS320C28x CPU and Instruction Set Reference Guide*.

6.6.1 Floating-Point Unit

The C28x plus floating-point (C28x+FPU) processor extends the capabilities of the C28x fixed-point CPU by adding registers and instructions to support IEEE single-precision floating-point operations.

Devices with the C28x+FPU include the standard C28x register set plus an additional set of floating-point unit registers. The additional floating-point unit registers are the following:

- Eight floating-point result registers, RnH (where n = 0–7)
- Floating-point Status Register (STF)
- Repeat Block Register (RB)

All of the floating-point registers, except the repeat block register, are shadowed. This shadowing can be used in high-priority interrupts for fast context save and restore of the floating-point registers.

For more information, see the *TMS320C28x Extended Instruction Sets Technical Reference Manual*.

6.6.2 Trigonometric Math Unit

The TMU extends the capabilities of a C28x+FPU by adding instructions and leveraging existing FPU instructions to speed up the execution of common trigonometric and arithmetic operations listed in 表 6-10.

表 6-10. TMU Supported Instructions

INSTRUCTIONS	C EQUIVALENT OPERATION	PIPELINE CYCLES
MPY2PIF32 RaH,RbH	a = b * 2pi	2/3
DIV2PIF32 RaH,RbH	a = b / 2pi	2/3
DIVF32 RaH,RbH,RcH	a = b/c	5
SQRTF32 RaH,RbH	a = sqrt(b)	5
SINPUF32 RaH,RbH	a = sin(b*2pi)	4
COSPUF32 RaH,RbH	a = cos(b*2pi)	4
ATANPUF32 RaH,RbH	a = atan(b)/2pi	4
QUADF32 RaH,RbH,RcH,RdH	Operation to assist in calculating ATANPU2	5

No changes have been made to existing instructions, pipeline or memory bus architecture. All TMU instructions use the existing FPU register set (R0H to R7H) to carry out their operations. A detailed explanation of the workings of the FPU can be found in the *TMS320C28x Extended Instruction Sets Technical Reference Manual*.

6.6.3 Viterbi, Complex Math, and CRC Unit II

The VCU-II is the second-generation Viterbi, Complex Math, and CRC extension to the C28x CPU. The VCU-II extends the capabilities of the C28x CPU by adding registers and instructions to accelerate the performance of Fast Fourier Transforms (FFTs) and communications-based algorithms. The C28x+VCU-II supports the following algorithm types:

- **Viterbi Decoding**

  Viterbi decoding is commonly used in baseband communications applications. The Viterbi decode algorithm consists of three main parts: branch metric calculations, compare-select (Viterbi butterfly), and a traceback operation. 表 6-11 shows a summary of the VCU performance for each of these operations.

表 6-11. Viterbi Decode Performance

VITERBI OPERATION	VCU CYCLES
Branch Metric Calculation (code rate = 1/2)	1
Branch Metric Calculation (code rate = 1/3)	2p
Viterbi Butterfly (add-compare-select)	2 (1)
Traceback per Stage	3 (2)

(1) C28x CPU takes 15 cycles per butterfly.
(2) C28x CPU takes 22 cycles per stage.

- **Cyclic Redundancy Check**

  Cyclic redundancy check (CRC) algorithms provide a straightforward method for verifying data integrity over large data blocks, communication packets, or code sections. The C28x+VCU can perform 8-bit, 16-bit, 24-bit, and 32-bit CRCs. For example, the VCU can compute the CRC for a block length of 10 bytes in 10 cycles. A CRC result register contains the current CRC, which is updated whenever a CRC instruction is executed.

- **Complex Math**

  Complex math is used in many applications, a few of which are:

  – Fast Fourier Transform

    The complex FFT is used in spread spectrum communications, as well as in many signal processing algorithms.

  – Complex filters

    Complex filters improve data reliability, transmission distance, and power efficiency. The C28x+VCU can perform a complex I and Q multiply with coefficients (four multiplies) in a single cycle. In addition, the C28x+VCU can read/write the real and imaginary parts of 16-bit complex data to memory in a single cycle.

  表 6-12 shows a summary of the VCU operations enabled by the VCU.

版权 © 2014–2020, Texas Instruments Incorporated

表 6-12. Complex Math Performance

COMPLEX MATH OPERATION	VCU CYCLES	NOTES
Add or Subtract	1	32 +/- 32 = 32-bit (Useful for filters)
Add or Subtract	1	16 +/- 32 = 15-bit (Useful for FFT)
Multiply	2p	16 x 16 = 32-bit
Multiply and Accumulate (MAC)	2p	32 + 32 = 32-bit, 16 x 16 = 32-bit
RPT MAC	2p+N	Repeat MAC. Single cycle after the first operation.

For more information, see the *TMS320C28x Extended Instruction Sets Technical Reference Manual*.

6.7 Control Law Accelerator

The CLA is an independent single-precision (32-bit) FPU processor with its own bus structure, fetch mechanism, and pipeline. Eight individual CLA tasks can be specified. Each task is started by software or a peripheral such as the ADC, ePWM, eCAP, eQEP, or CPU Timer 0. The CLA executes one task at a time to completion. When a task completes, the main CPU is notified by an interrupt to the PIE and the CLA automatically begins the next highest-priority pending task. The CLA can directly access the ADC Result registers, ePWM, eCAP, eQEP, Comparator and DAC registers. Dedicated message RAMs provide a method to pass additional data between the main CPU and the CLA.

图 6-2 shows the CLA block diagram.

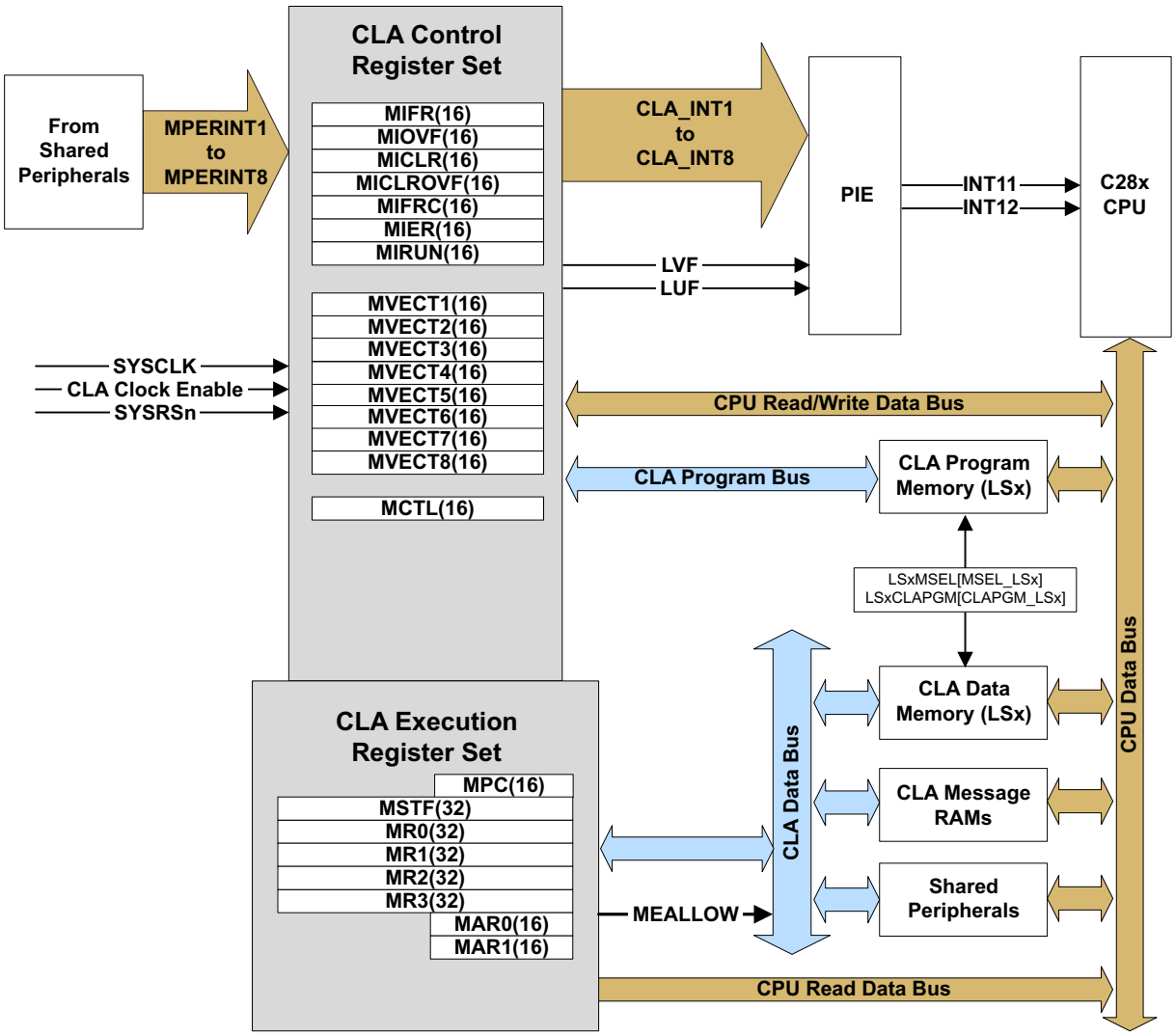

图 6-2. CLA Block Diagram

版权 © 2014–2020, Texas Instruments Incorporated

6.8 Direct Memory Access

The CPU has its own 6-channel DMA module. The DMA module provides a hardware method of transferring data between peripherals and/or memory without intervention from the CPU, thereby freeing up bandwidth for other system functions. Additionally, the DMA has the capability to orthogonally rearrange the data as it is transferred as well as “ping-pong” data between buffers. These features are useful for structuring data into blocks for optimal CPU processing.

The DMA module is an event-based machine, meaning it requires a peripheral or software trigger to start a DMA transfer. Although it can be made into a periodic time-driven machine by configuring a timer as the interrupt trigger source, there is no mechanism within the module itself to start memory transfers periodically. The interrupt trigger source for each of the six DMA channels can be configured separately and each channel contains its own independent PIE interrupt to let the CPU know when a DMA transfer has either started or completed. Five of the six channels are exactly the same, while Channel 1 has the ability to be configured at a higher priority than the others.

DMA features include:

- Six channels with independent PIE interrupts
- Peripheral interrupt trigger sources
  - ADC interrupts and EVT signals
  - Multichannel buffered serial port transmit and receive
  - External interrupts
  - CPU timers
  - EPWMxSOC signals
  - SPIx transmit and receive
  - SDFM
  - Software trigger
- Data sources and destinations:
  - GSx RAM
  - ADC result registers
  - ePWMx
  - SPI
  - McBSP
  - EMIF
- Word Size: 16-bit or 32-bit (SPI and McBSP limited to 16-bit)
- Throughput: four cycles/word (without arbitration)

图 6-3 shows a device-level block diagram of the DMA.

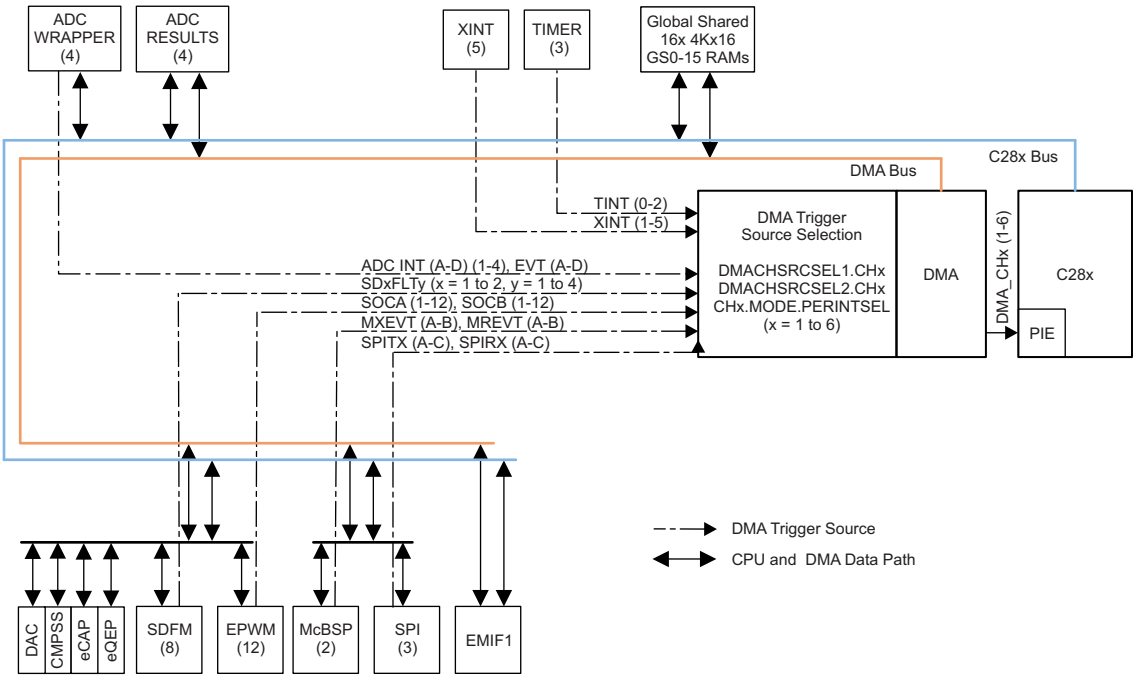

图 6-3. DMA Block Diagram

版权 © 2014–2020, Texas Instruments Incorporated

6.9 Boot ROM and Peripheral Booting

The device boot ROM contains bootloading software. The device boot ROM is executed each time the device comes out of reset. Users can configure the device to boot to flash (using GET mode) or choose to boot the device through one of the bootable peripherals by configuring the boot mode GPIO pins.

表 6-13 shows the possible boot modes supported on the device. The default boot mode pins are GPIO72 (boot mode pin 1) and GPIO 84 (boot mode pin 0). Users may choose to have weak pullups for boot mode pins if they use a peripheral on these pins as well, so the pullups can be overdriven. On this device, customers can change the factory default boot mode pins by programming user-configurable Dual Code Security Module (DCSM) OTP locations. This is recommended only for cases in which the factory default boot mode pins do not fit into the customer design. More details on the locations to be programmed is available in the *TMS320F2837xS Microcontrollers Technical Reference Manual*.

表 6-13. Device Boot Mode

MODE NO.	CPU1 BOOT MODE	$\overline{\text{TRST}}$	GPIO72 (BOOT MODE PIN 1)	GPIO84 (BOOT MODE PIN 0)
0	Parallel I/O	0	0	0
1	SCI Mode	0	0	1
2	Wait Boot Mode	0	1	0
3	Get Mode	0	1	1
4-7	EMU Boot Mode (debug probe connected)	1	X	X

注

The default behavior of Get mode is boot-to-flash. On unprogrammed devices, using Get mode will result in repeated watchdog resets, which may prevent proper JTAG connection and device initialization. Use Wait mode or another boot mode for unprogrammed devices.

CAUTION

Some reset sources are internally driven by the device. The user must ensure the pins used for boot mode are not actively driven by other devices in the system for these cases. The boot configuration has a provision for changing the boot pins in OTP. For more details, see the *TMS320F2837xS Microcontrollers Technical Reference Manual*.

6.9.1 EMU Boot or Emulation Boot

The CPU enters this boot when it detects that $\overline{\text{TRST}}$ is HIGH (that is, when a debug probe/debugger is connected). In this mode, the user can program the EMU_BOOTCTRL control-word (at location 0xD00) to instruct the device on how to boot. If the contents of the EMU_BOOTCTRL location are invalid, then the device would default to WAIT Boot mode. The emulation boot allows users to verify the device boot before programming the boot mode into OTP. Note that EMU_BOOTCTRL is not actually a register, but refers to a location in RAM (PIE RAM). PIE RAM starts at 0xD00, but the first few locations are reserved (when initializing the PIE vector table in application code) for these boot ROM variables.

6.9.2 WAIT Boot Mode

The device in this boot mode loops in the boot ROM. This mode is useful if users want to connect a debugger on a secure device or if users do not want the device to execute an application in flash yet.

6.9.3 Get Mode

The default behavior of Get mode is boot-to-flash. This behavior can be changed by programming the Zx-OTPBOOTCTRL locations in user configurable DCSM OTP. The user configurable DCSM OTP on this device is divided in to two secure zones: Z1 and Z2. The Get mode function in boot ROM first checks if a valid OTPBOOTCTRL value is programmed in Z1. If the answer is yes, then the device boots as per the Z1-OTPBOOTCTRL location. The Z2-OTPBOOTCTRL location is read and decodes only if Z1-OTPBOOTCTRL is invalid or not programmed. If either Zx-OTPBOOTCTRL location is not programmed, then the device defaults to factory default operation, which is to use factory default boot mode pins to boot to flash if the boot mode pins are set to GET MODE. Users can choose the device through which to boot—SPI, I2C, CAN, and USB—by programming proper values into the user configurable DCSM OTP. More details on this can be found in the *TMS320F2837xS Microcontrollers Technical Reference Manual*.

版权 © 2014–2020, Texas Instruments Incorporated

6.9.4 Peripheral Pins Used by Bootloaders

表 6-14 shows the GPIO pins used by each peripheral bootloader. This device supports two sets of GPIOs for each mode, as shown in 表 6-14.

表 6-14. GPIO Pins Used by Each Peripheral Bootloader

BOOTLOADER	GPIO PINS	NOTES
SCI-Boot0	SCITXDA: GPIO84 SCIRXDA: GPIO85	SCIA Boot I/O option 1 (default SCI option when chosen through Boot Mode GPIOs)
SCI-Boot1	SCIRXDA: GPIO28 SCITXDA: GPIO29	SCIA Boot option 2 – with alternate I/Os.
Parallel Boot	D0 – GPIO65 D1 – GPIO64 D2 – GPIO58 D3 – GPIO59 D4 – GPIO60 D5 – GPIO61 D6 – GPIO62 D7 – GPIO63 HOST_CTRL – GPIO70 DSP_CTRL – GPIO69	
CAN-Boot0	CANRXA: GPIO70 CANTXA: GPIO71	CAN-A Boot – I/O option 1
CAN-Boot1	CANRXA: GPIO62 CANTXA: GPIO63	CAN-A Boot – I/O option 2
I2C-Boot0	SDAA: GPIO91 SCLA: GPIO92	I2CA Boot – I/O option 1
I2C-Boot1	SDAA: GPIO32 SCLA: GPIO33	I2CA Boot – I/O option 2
SPI-Boot0	SPISIMOA - GPIO58 SPISOMIA - GPIO59 SPICLKA - GPIO60 SPISTEA - GPIO61	SPIA Boot – I/O option 1
SPI-Boot1	SPISIMOA – GPIO16 SPISOMIA – GPIO17 SPICLKA – GPIO18 SPISTEA – GPIO19	SPIA Boot – I/O option 2
USB Boot	USB0DM - GPIO42 USB0DP - GPIO43	The USB Bootloader will switch the clock source to the external crystal oscillator (X1 and X2 pins). A 20-MHz crystal should be present on the board if this boot mode is selected.

6.10 Dual Code Security Module

The dual code security module (DCSM) prevents access to on-chip secure memories. The term “secure” means access to secure memories and resources is blocked. The term “unsecure” means access is allowed; for example, through a debugging tool such as Code Composer Studio™ (CSS).

The code security mechanism offers protection for two zones, Zone 1 (Z1) and Zone 2 (Z2). The security implementation for both the zones is identical. Each zone has its own dedicated secure resource (OTP memory and secure ROM) and allocated secure resource (CLA, LSx RAM, and flash sectors).

The security of each zone is ensured by its own 128-bit password (CSM password). The password for each zone is stored in an OTP memory location based on a zone-specific link pointer. The link pointer value can be changed to program a different set of security settings (including passwords) in OTP.

Code Security Module Disclaimer

THE CODE SECURITY MODULE (CSM) INCLUDED ON THIS DEVICE WAS DESIGNED TO PASSWORD PROTECT THE DATA STORED IN THE ASSOCIATED MEMORY AND IS WARRANTED BY TEXAS INSTRUMENTS (TI), IN ACCORDANCE WITH ITS STANDARD TERMS AND CONDITIONS, TO CONFORM TO TI'S PUBLISHED SPECIFICATIONS FOR THE WARRANTY PERIOD APPLICABLE FOR THIS DEVICE.

TI DOES NOT, HOWEVER, WARRANT OR REPRESENT THAT THE CSM CANNOT BE COMPROMISED OR BREACHED OR THAT THE DATA STORED IN THE ASSOCIATED MEMORY CANNOT BE ACCESSED THROUGH OTHER MEANS. MOREOVER, EXCEPT AS SET FORTH ABOVE, TI MAKES NO WARRANTIES OR REPRESENTATIONS CONCERNING THE CSM OR OPERATION OF THIS DEVICE, INCLUDING ANY IMPLIED WARRANTIES OF MERCHANTABILITY OR FITNESS FOR A PARTICULAR PURPOSE.

IN NO EVENT SHALL TI BE LIABLE FOR ANY CONSEQUENTIAL, SPECIAL, INDIRECT, INCIDENTAL, OR PUNITIVE DAMAGES, HOWEVER CAUSED, ARISING IN ANY WAY OUT OF YOUR USE OF THE CSM OR THIS DEVICE, WHETHER OR NOT TI HAS BEEN ADVISED OF THE POSSIBILITY OF SUCH DAMAGES. EXCLUDED DAMAGES INCLUDE, BUT ARE NOT LIMITED TO LOSS OF DATA, LOSS OF GOODWILL, LOSS OF USE OR INTERRUPTION OF BUSINESS OR OTHER ECONOMIC LOSS.

版权 © 2014–2020, Texas Instruments Incorporated

6.11 Timers

CPU-Timers 0, 1, and 2 are identical 32-bit timers with presettable periods and with 16-bit clock prescaling. The timers have a 32-bit count-down register that generates an interrupt when the counter reaches zero. The counter is decremented at the CPU clock speed divided by the prescale value setting. When the counter reaches zero, it is automatically reloaded with a 32-bit period value.

CPU-Timer 0 is for general use and is connected to the PIE block. CPU-Timer 1 is also for general use and is connected to INT13 of the CPU. CPU-Timer 2 is reserved for TI-RTOS. It is connected to INT14 of the CPU. If TI-RTOS is not being used, CPU-Timer 2 is available for general use.

CPU-Timer 2 can be clocked by any one of the following:

- SYSCLK (default)
- Internal zero-pin oscillator 1 (INTOSC1)
- Internal zero-pin oscillator 2 (INTOSC2)
- X1 (XTAL)
- AUXPLLCLK

6.12 Nonmaskable Interrupt With Watchdog Timer (NMIWD)

The NMIWD module is used to handle system-level errors. The conditions monitored are:

- Missing system clock due to oscillator failure
- Uncorrectable ECC error on CPU access to flash memory
- Uncorrectable ECC error on CPU, CLA, or DMA access to RAM

If the CPU does not respond to the latched error condition, then the NMI watchdog will trigger a reset after a programmable time interval. The default time is 65536 SYSCLK cycles.

6.13 Watchdog

The watchdog module is the same as the one on previous TMS320C2000™ MCUs, but with an optional lower limit on the time between software resets of the counter. This windowed countdown is disabled by default, so the watchdog is fully backwards-compatible.

The watchdog generates either a reset or an interrupt. It is clocked from the internal oscillator with a selectable frequency divider.

图 6-4 shows the various functional blocks within the watchdog module.

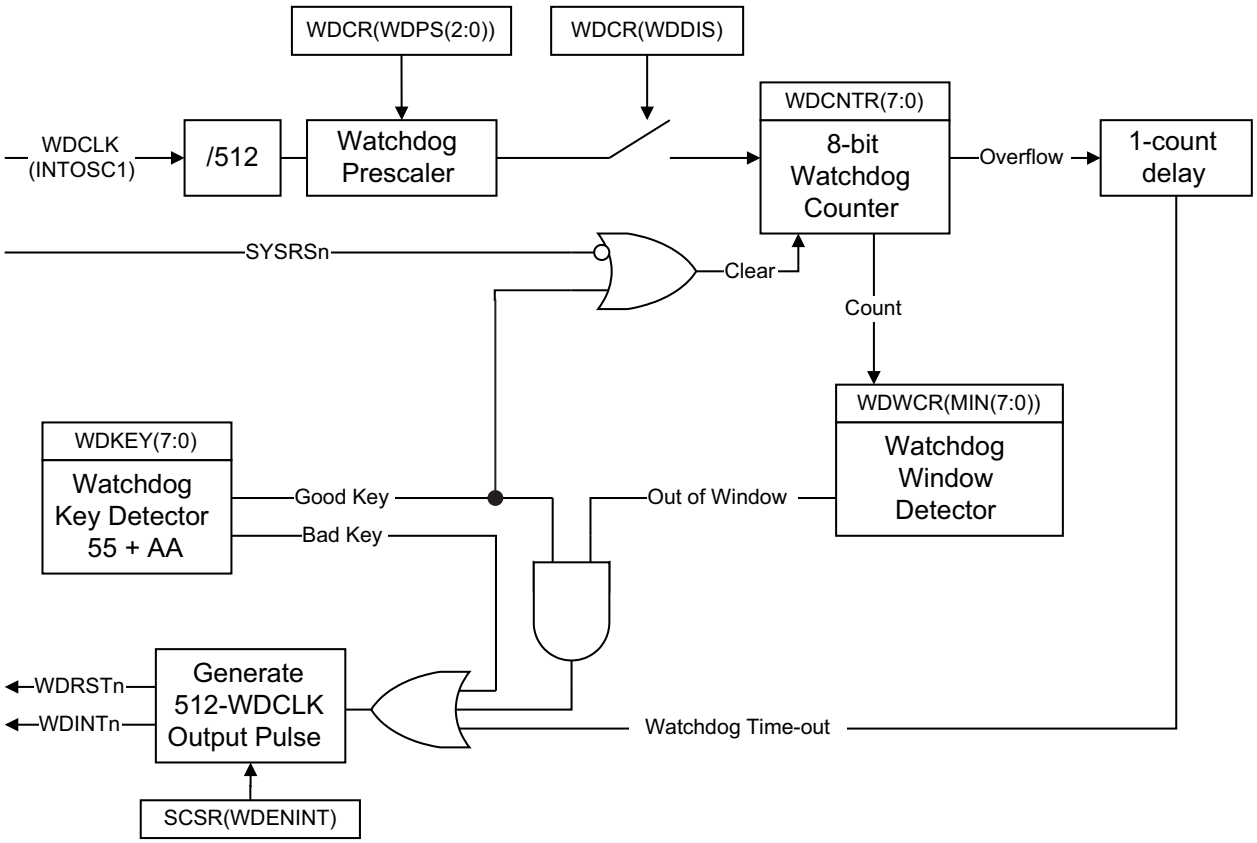

图 6-4. Windowed Watchdog

版权 © 2014–2020, Texas Instruments Incorporated

6.14 Configurable Logic Block (CLB)

The C2000 configurable logic block (CLB) is a collection of blocks that can be interconnected using software to implement custom digital logic functions or enhance existing on-chip peripherals. The CLB is able to enhance existing peripherals through a set of crossbar interconnections, which provide a high level of connectivity to existing control peripherals such as enhanced pulse width modulators (ePWM), enhanced capture modules (eCAP), and enhanced quadrature encoder pulse modules (eQEP). The crossbars also allow the CLB to be connected to external GPIO pins. In this way, the CLB can be configured to interact with device peripherals to perform small logical functions such as comparators, or to implement custom serial data exchange protocols. Through the CLB, functions that would otherwise be accomplished using external logic devices can now be implemented inside the MCU.

The CLB peripheral is configured through the CLB tool. For more information on the CLB tool, available examples, application reports and users guide, please refer to the following location in your C2000Ware package (C2000Ware_2_00_00_03 and higher):

C2000WARE_INSTALL_LOCATION\utilities\clb_tool\clb_syscfg\doc

CLB Tool User Guide

How to Design with the C2000™ CLB Application Report

How to Migrate Custom Logic From an FPGA/CPLD to C2000™ CLB Application Report

The CLB module and its interconnects are shown in 图 6-5.

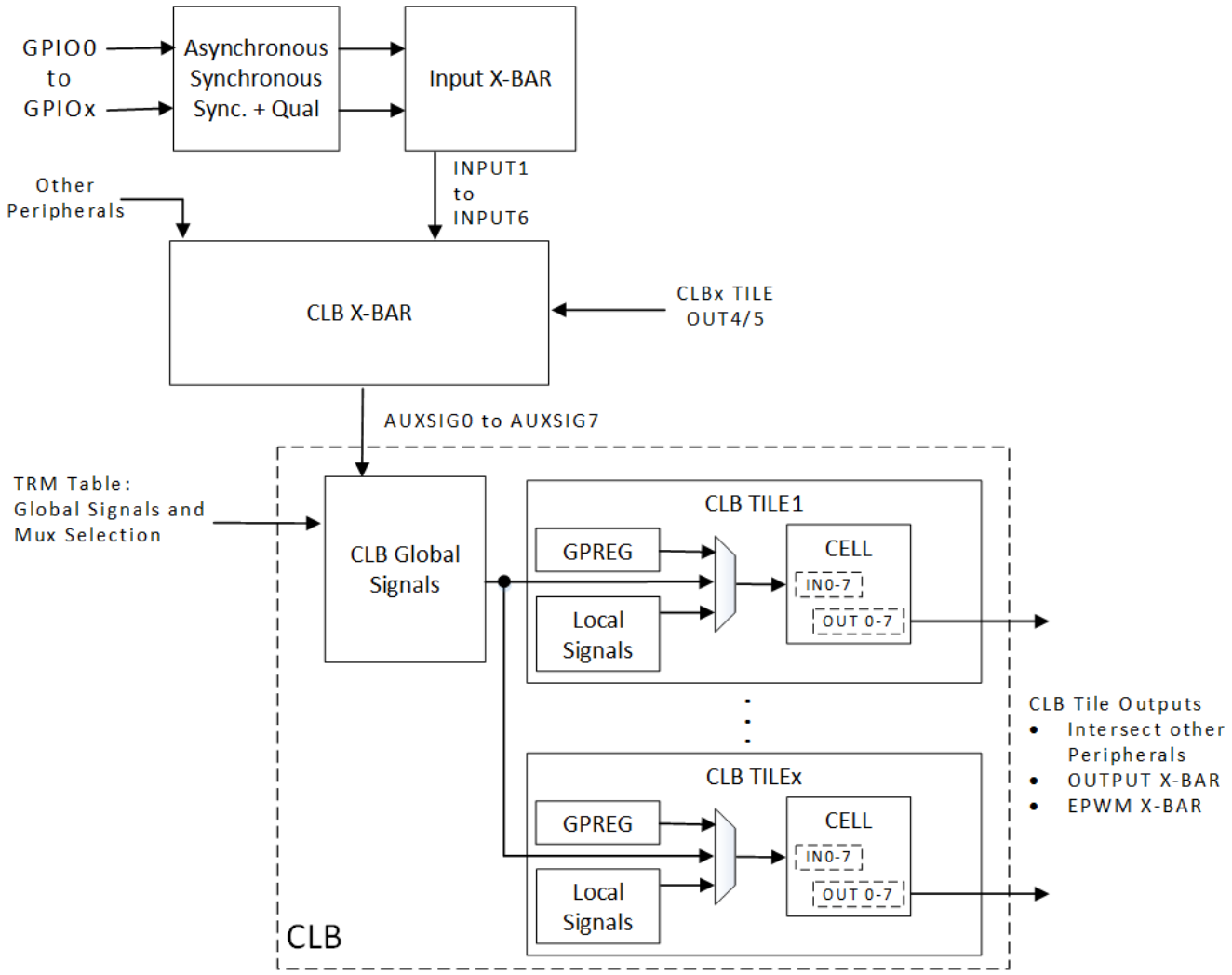

图 6-5. CLB Overview

Absolute encoder protocol interfaces are now provided as Position Manager solutions in the C2000Ware MotorControl SDK. Configuration files, application programmer interface (API), and use examples for such solutions are provided with C2000Ware MotorControl SDK. In some solutions, the TI-configured CLB is used with other on-chip resources, such as the SPI port or the C28x CPU, to perform more complex functionality. See Table 3-1 for the devices that support the CLB feature.

版权 © 2014–2020, Texas Instruments Incorporated

6.15 Functional Safety

TMS320C2000™ MCUs are equipped with a TI release validation-based C28x and CLA Compiler Qualification Kit (CQ-Kit), which is available for free and may be requested at the SafeTI Compiler Qualification Kit web page.

Additionally, C2000™ MCUs are supported by the TI C2000 Support from Embedded Coder from MathWorks® to generate C2000-optimized code from a Simulink® model. Simulink® enables Model-Based Design to ease the systematic compliance process with certified tools, including Embedded Coder®, Simulink® model verification tools, Polyspace® code verification tools, and the IEC Certification Kit for ISO 26262 and IEC 61508 compliance. For more information, see the How to Use Simulink for ISO 26262 Projects article.

The *Error Detection in SRAM Application Report* provides technical information about the nature of the SRAM bit cell and bit array, as well as the sources of SRAM failures. It then presents methods for managing memory failures in electronic systems. This discussion is intended for electronic system developers or integrators who are interested in improving the robustness of the embedded SRAM.

Functional safety-compliant products are developed using an ISO 26262/IEC 61508-compliant hardware development process that is independently assessed and certified to meet ASIL D/SIL 3 systematic capability (see certificate). The TMS320F2837D, TMS320F2837xS, and TMS320F2807x MCUs have been certified to meet a component-level random hardware capability of ASIL B/SIL 2 (see certificate).

The Functional Safety Compliant enablers include:

- A Functional Safety Manual
- A detailed, tunable, quantitative Failure Modes, Effects, and Diagnostics Analysis (FMEDA)
- A software diagnostic library that will help shorten the time to implement various software safety mechanisms
- A CLA Self-Test Library (STL) that ensures >90% Diagnostic Coverage for permanent faults
- A collection of application reports to help in the development of functionally safe systems.

A functional safety manual that describes all of the hardware and software functional safety mechanisms is available. See the *Safety Manual for TMS320F2837xD, TMS320F2837xS, and TMS320F2807x*.

A detailed, tunable, fault-injected, quantitative FMEDA that enables the calculation of random hardware metrics—as outlined in the International Organization for Standardization ISO 26262 and the International Electrotechnical Commission IEC 61508 for automotive and industrial applications, respectively—is also available. This tunable FMEDA must be requested; see the *C2000™ SafeTI Package for Automotive and Industrial MCUs User's Guide*.

- A white paper outlining the value (or benefit) of a tunable FMEDA is available. See the *SafeTI Functional Safety: A tunable FMEDA for C2000™ MCUs* publication.
- Parts 1 and 2 of a five-part FMEDA tuning training are available. See the C2000™ SafeTI Tunable FMEDA Training page.
  Parts 3, 4, and 5 are packaged with the tunable FMEDA, and must be requested.

The C2000 SafeTI Diagnostic Software Library is a collection of different safety mechanisms designed to detect faults. These safety mechanisms target different device components, including the C28x core, the control law accelerator (CLA), system control, static random access memory (SRAM), flash, and communications and control peripherals. The software safety mechanisms leverage available hardware safety features such as the C28x hardware built-in self-test (HWBIST); error detection and correction functionality on memories; parallel signature analysis circuitry; missing clock detection logic; watchdog counters; and hardware redundancy.

Also included are software functional safety manual, user guides, example projects, and source code to help users shorten system integration time. The library package includes a compliance support package (CSP), a series of documents that TI used to develop and test the diagnostic software library. The CSP provides the necessary documentation and reports to assist users with compliance to functional safety standards: software safety requirements specifications; a software architecture document; software

module design documents; software module unit test plans; software module unit test documents; static analysis reports; unit test reports; dynamic analysis reports; functional test reports; and traceability documents. Users can use these documents to comply with route 1s (as described in IEC 61508-3, section 7.4.2.12) to reuse a preexisting software element to implement all or part of a safety function. The contents of the CSP could also help users make important decisions for overall system safety compliance.

A Control Law Accelerator Self-Test Library (STL) (at the C2000 SafeTI Diagnostic Software Library page) is specifically designed, developed, tested, assessed, and approved to meet > 90% diagnostic coverage of the CLA processing element. The CLA STL enables customers to use the CLA in their functionally safe control systems by providing functional safety diagnostic measures for the CLA. The CLA STL allows customers concerned with functional safety to take advantage of the CLA, thus enabling greater processing power. The CLA STL software package includes the STL source code and library, as well as self-test application (STA) example and additional user guides. The user guides and STA example detail how to integrate the CLA diagnostic testing into functional safety customer application designs. Additionally, the *C2000™ CLA Self-Test Library Application Report* provides an overview and describes the system integration considerations of the CLA STL.

Two related application reports offer details about how to develop functionally safe systems with C2000 real-time control devices:

- *C2000™ Hardware Built-In Self-Test* discusses the HWBIST safety mechanism, along with its functions and features, in the F2807x/F2837xS/F2837xD series of C2000 devices. The report also addresses some system-level considerations when using the HWBIST feature and explains how customers can use the diagnostic library on their system.
- *C2000™ CPU Memory Built-In Self-Test* describes embedded memory validation using the C28x central processing unit (CPU) during an active control loop. It discusses system challenges to memory validation as well as the different solutions provided by C2000 devices and software. Finally, it presents the Diagnostic Library implementations for memory testing.

版权 © 2014–2020, Texas Instruments Incorporated

7 Applications, Implementation, and Layout

注

Information in the following sections is not part of the TI component specification, and TI does not warrant its accuracy or completeness. TI's customers are responsible for determining suitability of components for their purposes. Customers should validate and test their design implementation to confirm system functionality.

7.1 TI Reference Design

The TI Reference Design Library is a robust reference design library spanning analog, embedded processor, and connectivity. Created by TI experts to help you jump start your system design, all reference designs include schematic or block diagrams, BOMs, and design files to speed your time to market. Search and download designs at the Select TI reference designs page.

Industrial Servo Drive and AC Inverter Drive Reference Design
The DesignDRIVE Development Kit is a reference design for a complete industrial drive directly connecting to a three-phase ACI or PMSM motor. Many drive topologies can be created from the combined control, power, and communications technologies included on this single platform. This platform includes multiple position sensor interfaces, diverse current sensing techniques, hot-side partitioning options, and expansion for safety and industrial Ethernet.

Differential Signal Conditioning Circuit for Current and Voltage Measurement Using Fluxgate Sensors
This design provides a 4-channel signal conditioning solution for differential ADCs integrated into a microcontroller measuring motor current using fluxgate sensors. Also provided is an alternative measurement circuit with external differential SAR ADCs as well as circuits for high-speed overcurrent and earth fault detection. Proper differential signal conditioning improves noise immunity on critical current measurements in motor drives. This reference design can help increase the effective resolution of the analog-to-digital conversion, improving motor drive efficiency.

8 器件和文档支持

8.1 器件和开发支持工具命名规则

为了标明产品开发周期的阶段，TI 为所有 TMS320™MCU 器件和支持工具的器件型号指定前缀。每一个 TMS320 MCU 商用系列成员产品具有以下三个前缀中的一个：TMX、TMP 或者 TMS（例如，**TMS**320F28379S）。德州仪器 (TI) 建议为其支持的工具使用三个可用前缀指示符中的两个：TMDX 和 TMDS。这些前缀代表了产品从工程原型机（其中 TMX 针对器件，而 TMDX 针对工具）直到完全合格的生产器件和工具（其中 TMS 针对器件，而 TMDS 针对工具）的产品开发进化阶段。

器件开发进化流程：

TMX 试验器件，不一定代表最终器件的电气规格

TMP 最终硅片，符合器件的电气规格，但是未完成质量和可靠性验证

TMS 完全合格的生产器件

支持工具开发发展流程：

TMDX 还未经完整的德州仪器 (TI) 内部质量测试的开发支持工具

TMDS 完全合格的开发支持产品

TMX 和 TMP 器件和 TMDX 开发支持工具出货时带有如下的免责声明：
“开发产品用于内部评估用途。”

TMS 器件和 TMDS 开发支持工具已进行完全特性描述，并且器件的质量和可靠性已经完全论证。TI 的标准保修证书适用。

预测显示原型器件（TMX 或者 TMP）的故障率大于标准生产器件。由于它们的预计的最终使用故障率仍未定义，德州仪器建议不要将这些器件用于任何生产系统。只有合格的产品器件将被使用。

TI 器件的命名规则还包括一个带有器件系列名称的后缀。这个后缀包括封装类型（例如 PTP）和温度范围（如 T）。图 8-1 提供了解读任一系列产品成员完整器件名称的图例。

要获取器件型号以及更多订购信息，请访问 TI 网站 (www.ti.com.cn) 或者联系您的 TI 销售代表。

有关裸片器件命名规则标记的其他 说明 ，请参阅*《TMS320F2837xS MCU 器件勘误表》*。

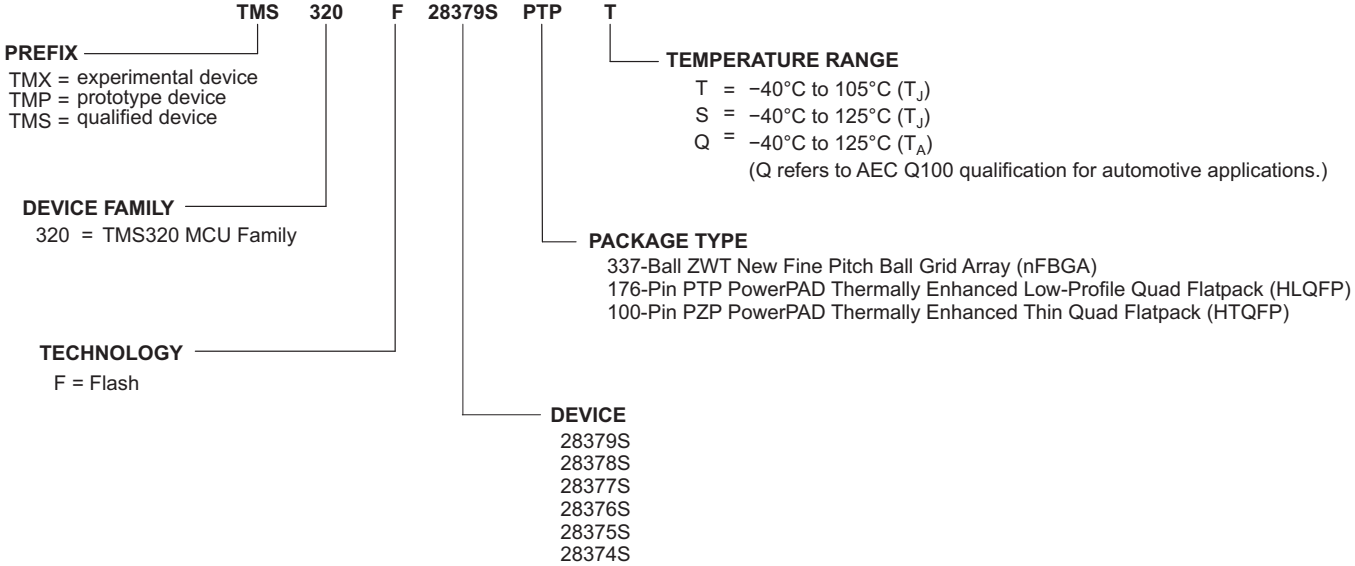

图 **8-1.** 器件命名规则

版权 © 2014–2020, Texas Instruments Incorporated

8.2 标记

图 8-2 提供了 2837xS 器件标记示例并定义了各个标记。您可以通过封装顶部所示的符号判断器件的修订版本，如 图 8-2 所示。一些原型器件的标记可能会与此处所示的标记有所不同。

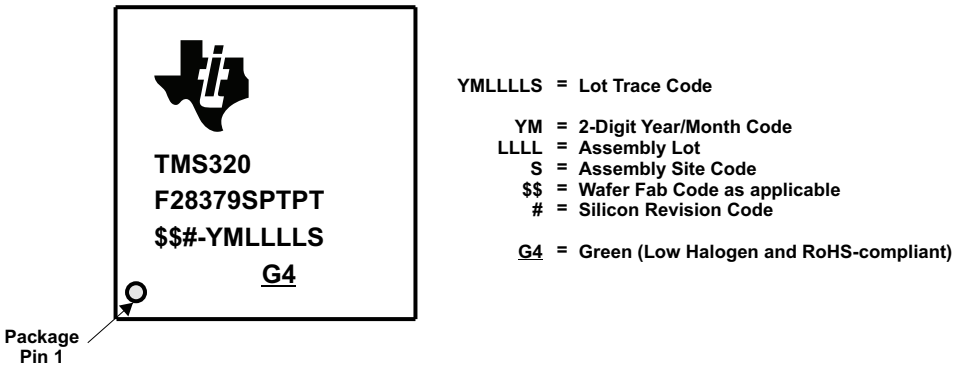

图 **8-2.** 器件标记示例

表 **8-1.** 根据批次追踪代码确定器件的修订版本

器件修订版本代码	器件修订版本	修订版本 ID(1) 地址：0x5D00C	备注
B	B	0x0002	该器件修订版本的代码为 TMX。
C	C	0x0003	该器件修订版本的代码为 TMS。

(1) 器件修订版本 ID

8.3 工具和软件

TI 提供大量的开发工具。下面列出了部分用于评估器件性能、生成代码和开发解决方案的工具和软件。要查看 C2000™ 实时控制 MCU 的所有可用工具和软件，请访问 C2000 实时控制 MCU - 设计和开发页面。

开发工具

用于 C2000 实时控制开发套件的 F28379D controlCARD
德州仪器 (TI) 提供的 F28379D controlCARD 支持位置管理器，是用于初期软件开发以及短期内构建系统原型、试验台和许多其他需要轻松获得高性能控制器的项目的理想产品。所有 C2000 controlCARD 均是使用 HSEC180 或 DIMM100 外形尺寸来提供薄型单板控制器解决方案的完整板级模块。主机系统只需为 controlCARD 提供单个 5V 电源轨，即可使其运行全部功能。

F28379D 实验套件
C2000™ MCU 实验套件提供了一个使用德州仪器 (TI) C2000 32 位微控制器系列进行实时、闭环控制开发的强大硬件原型设计平台。此平台作为一种非常出色的工具，可定制和验证众多常见电力电子 应用的解决方案，这些应用包括电机控制、数字电源、光伏逆变器、数字 LED 照明、精密传感等等。

软件工具

用于 C2000 MCU 的 C2000Ware
用于 C2000 微控制器的 C2000Ware 是一系列紧密结合的开发软件和文档，旨在最大限度地缩短软件开发时间。从特定于器件的驱动程序和库到器件外设示例，C2000Ware 能够为开始进行开发和评估提供坚实的基础。相较于 ™，目前推荐使用 C2000Ware 作为内容交付工具。 ControlSUITE™，建议使用 C2000Ware 作为内容交付工具。

用于 C2000 微控制器的 Code Composer Studio™ (CCS) 集成开发环境 (IDE)
Code Composer Studio 是支持 TI 的微控制器和嵌入式处理器产品系列的集成开发环境 (IDE)。Code Composer Studio 包含一整套用于开发和调试嵌入式应用 的工具的工具。它包含了优化的 C/C++ 编译器、源代码编辑器、项目构建环境、调试器、描述器以及其他多种 功能。直观的 IDE 提供了单一用户界面，可帮助用户完成应用开发流程的每个步骤。熟悉的工具和界面使用户能够比以前更快地入手。Code Composer Studio 将 Eclipse 软件框架的优点和 TI 先进的嵌入式调试功能相结合，为嵌入式开发人员提供了一种功能丰富的优异开发环境。

引脚多路复用工具
引脚多路复用实用程序是一款软件工具，可提供图形用户界面，用于配置引脚多路复用设置、解决冲突以及指定 TI MPU 的 I/O 单元特性。

F021 闪存应用编程接口
F021 闪存应用编程接口 (API) 提供的软件函数库可用于对 F021 片上闪存执行编程、擦除和验证操作。

UniFlash 独立闪存工具
UniFlash 是一个独立工具，用于通过 GUI、命令行或脚本接口对片上闪存进行编程。

版权 © 2014–2020, Texas Instruments Incorporated

模型

您可以从产品的“工具与软件”页面下载各种模型。这些模型包括 I/O 缓冲器信息规范 (IBIS) 模型和边界扫描说明 语言 (BSDL) 模型。要查看所有可用模型，请访问每个器件的“工具与软件”页面的“模型”部分，具体链接见 表 8-2。

培训

为了帮助设计工程师充分利用 C2000 微控制器 特性 和性能，TI 开发了各种培训资源。通过利用在线培训资料和可下载的实际操作技术讲座，可方便地获得 C2000 微控制器系列的全方位实际知识。这些培训资源旨在简化学习过程，同时缩短开发时间并加快产品上市速度。有关各种培训资源的更多信息，请访问 C2000™ 实时控制 MCU - 支持和培训站点。

有关具体的 F2837xD/F2837xS/F2807x 实践技术培训资源，请访问 C2000™ MCU 器件讲座。

8.4 文档支持

要接收文档更新通知，请导航至 TI.com.cn 上的器件产品文件夹。单击右上角的*通知我*进行注册，即可每周接收产品信息更改摘要。有关更改的详细信息，请查看任何已修订文档中包含的修订历史记录。

下面列出了介绍处理器、相关外设以及其他配套技术资料的最新文档。

勘误表

《TMS320F2837xS MCU 器件勘误表》 介绍了器件的已知问题并提供了权变措施。

技术参考手册

《TMS320F2837xS 微控制器技术参考手册》 详述了 2837xS 微控制器每个外设和子系统的集成、环境和功能 说明以及编程模型。

CPU 用户指南

《TMS320C28x CPU 和指令集参考指南》介绍了 TMS320C28x 定点数字信号处理器 (DSP) 的中央处理器 (CPU) 和汇编语言指令。此参考指南还介绍了上述 DSP 所 提供 的仿真特性。

《TMS320C28x 扩展指令集技术参考手册》介绍了 TMU、VCU-II 和 FPU 加速器的架构、流水线和指令集。

外设指南

《C2000 实时控制外设参考指南》介绍了 28x DSP 的外设参考指南。

工具指南

《TMS320C28x 汇编语言工具 v19.6.0.STS 用户指南》介绍了用于 TMS320C28x 器件的汇编语言工具（用于开发汇编语言代码的汇编器和其他工具）、汇编器指令、宏、通用目标文件格式和符号调试指令。

《TMS320C28x 优化 C/C++ 编译器 v19.6.0.STS 用户指南》介绍了 TMS320C28x C/C++ 编译器。此编译器接受 ANSI 标准 C/C++ 源代码，并为 TMS320C28x 器件生成 TMS320 DSP 汇编语言源代码。

应用报告

《半导体封装方法》介绍了准备向最终用户发货时半导体器件所用的封装方法。

《计算嵌入式处理器的有效使用寿命》介绍了如何计算 TI 嵌入式处理器 (EP) 在电子系统中运行时的有效使用寿命。本文档的目标读者为希望确定 TI EP 的可靠性是否符合终端系统可靠性要求的总工程师。

《IBIS（I/O 缓冲器信息规范）建模简介》讨论了 IBIS 的各个方面，包括其历史、优势、兼容性、模型生成流程、输入/输出结构建模中的数据要求以及未来趋势。

《C2000™ 微控制器串行闪存编程》介绍了如何使用闪存内核和 ROM 加载程序对器件进行串行编程。

版权 © 2014–2020, Texas Instruments Incorporated

8.5 相关链接

下表列出了快速访问链接。类别包括技术文档、支持和社区资源、工具和软件，以及立即订购快速访问。

表 **8-2.** 相关链接

器件	产品文件夹	立即订购	技术文档	工具和软件	支持和社区
TMS320F28379S	单击此处	单击此处	单击此处	单击此处	单击此处
TMS320F28378S	单击此处	单击此处	单击此处	单击此处	单击此处
TMS320F28377S	单击此处	单击此处	单击此处	单击此处	单击此处
TMS320F28376S	单击此处	单击此处	单击此处	单击此处	单击此处
TMS320F28375S	单击此处	单击此处	单击此处	单击此处	单击此处
TMS320F28374S	单击此处	单击此处	单击此处	单击此处	单击此处

8.6 Support Resources

TI E2E™ support forums are an engineer's go-to source for fast, verified answers and design help — straight from the experts. Search existing answers or ask your own question to get the quick design help you need.

Linked content is provided "AS IS" by the respective contributors. They do not constitute TI specifications and do not necessarily reflect TI's views; see TI's Terms of Use.

8.7 商标

PowerPAD, C2000, Code Composer Studio, TMS320C2000, TMS320, ControlSUITE, 用于 C2000 微控制器的 Code Composer Studio, E2E are trademarks of Texas Instruments.
Bosch is a registered trademark of Robert Bosch GmbH Corporation.
MathWorks, Simulink, Embedded Coder, Polyspace are registered trademarks of The MathWorks, Inc.
All other trademarks are the property of their respective owners.

8.8 静电放电警告

ESD 可能会损坏该集成电路。德州仪器 (TI) 建议通过适当的预防措施处理所有集成电路。如果不遵守正确的处理措施和安装程序，可能会损坏集成电路。

ESD 的损坏小至导致微小的性能降级，大至整个器件故障。 精密的集成电路可能更容易受到损坏，这是因为非常细微的参数更改都可能会导致器件与其发布的规格不相符。

8.9 Glossary

TI Glossary This glossary lists and explains terms, acronyms, and definitions.

9 机械、封装和可订购信息

9.1 封装信息

以下页面包含机械、封装和可订购信息。这些信息是指定器件的最新可用数据。数据如有变更，恕不另行通知，且不会对此文档进行修订。如需获取此数据表的浏览器版本，请查阅左侧的导航栏。

版权 © 2014–2020, Texas Instruments Incorporated

PACKAGE OUTLINE

PZP0100N

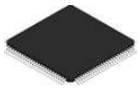

PowerPAD™ TQFP - 1.2 mm max height

PLASTIC QUAD FLATPACK

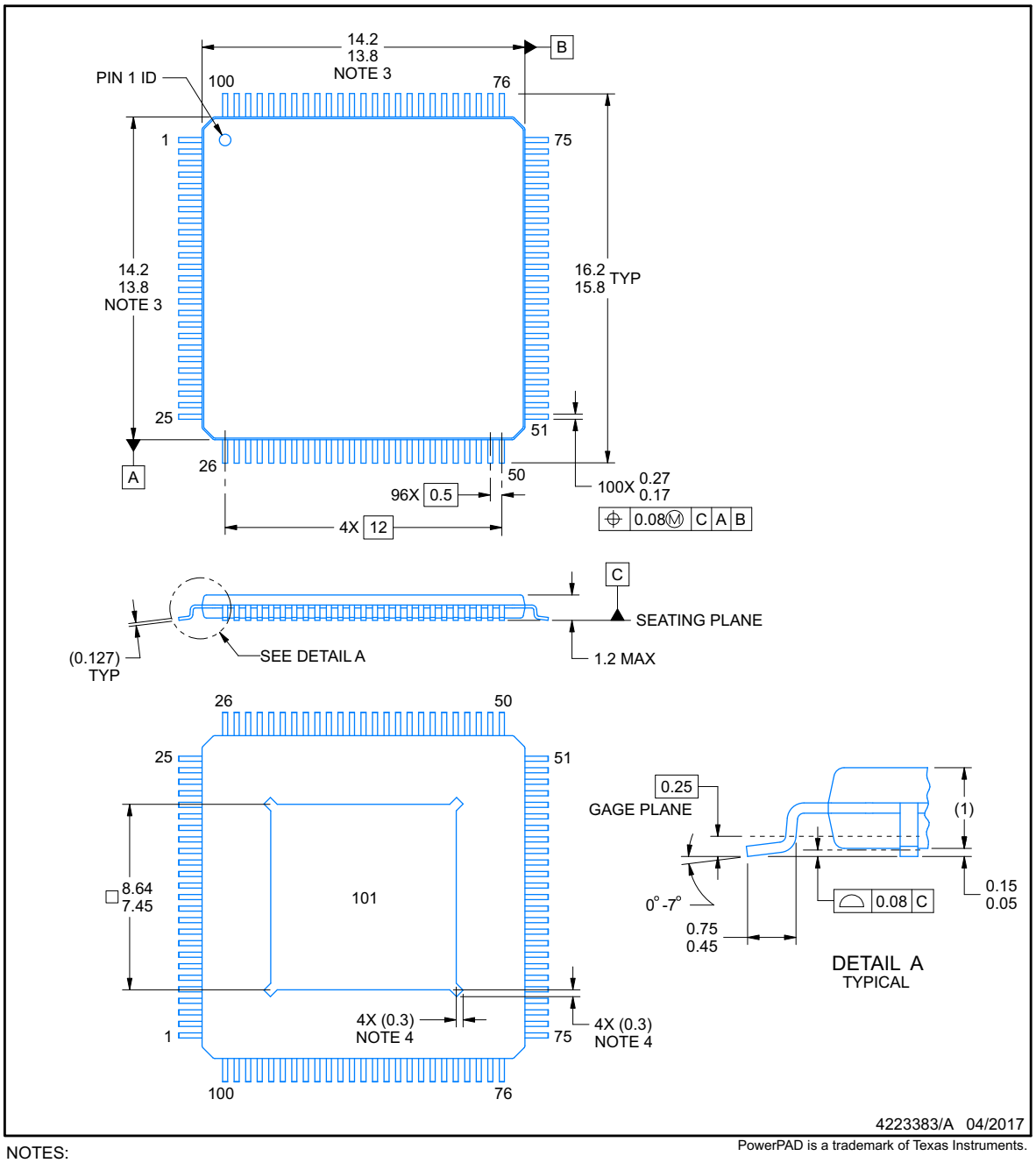

PowerPAD is a trademark of Texas Instruments.

NOTES:

1. All linear dimensions are in millimeters. Any dimensions in parenthesis are for reference only. Dimensioning and tolerancing per ASME Y14.5M.
2. This drawing is subject to change without notice.
3. This dimension does not include mold flash, protrusions, or gate burrs.
4. Strap features may not be present.
5. Reference JEDEC registration MS-026.

版权 © 2014–2020, Texas Instruments Incorporated

EXAMPLE BOARD LAYOUT

PZP0100N — **PowerPAD™ TQFP - 1.2 mm max height**

PLASTIC QUAD FLATPACK

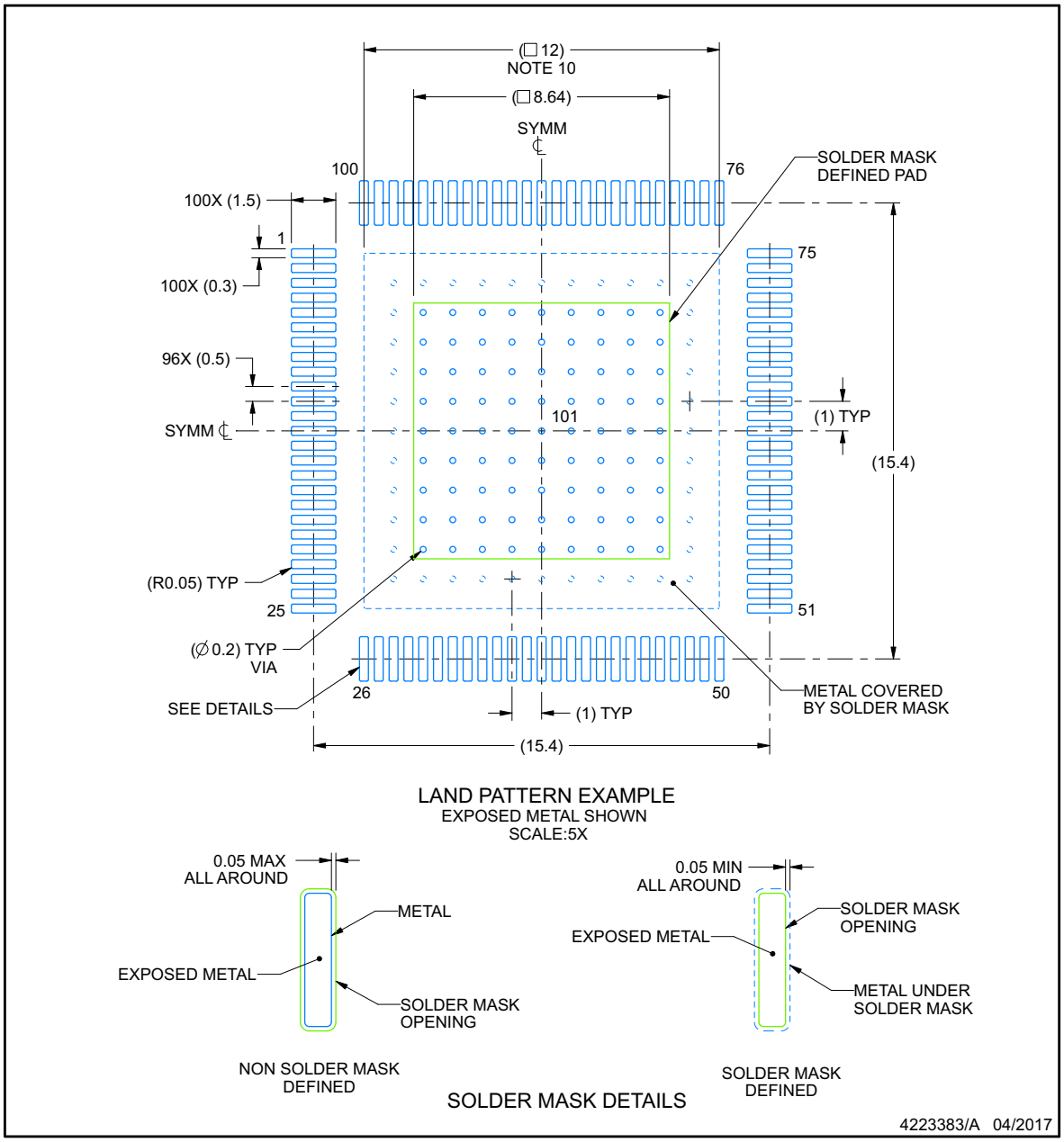

NOTES: (continued)

6. Publication IPC-7351 may have alternate designs.
7. Solder mask tolerances between and around signal pads can vary based on board fabrication site.
8. This package is designed to be soldered to a thermal pad on the board. See technical brief, Powerpad thermally enhanced package, Texas Instruments Literature No. SLMA002 (www.ti.com/lit/slma002) and SLMA004 (www.ti.com/lit/slma004).
9. Vias are optional depending on application, refer to device data sheet. It is recommended that vias under paste be filled, plugged or tented.
10. Size of metal pad may vary due to creepage requirement.

版权 © 2014–2020, Texas Instruments Incorporated

EXAMPLE STENCIL DESIGN

PZP0100N **PowerPAD™ TQFP - 1.2 mm max height**

PLASTIC QUAD FLATPACK

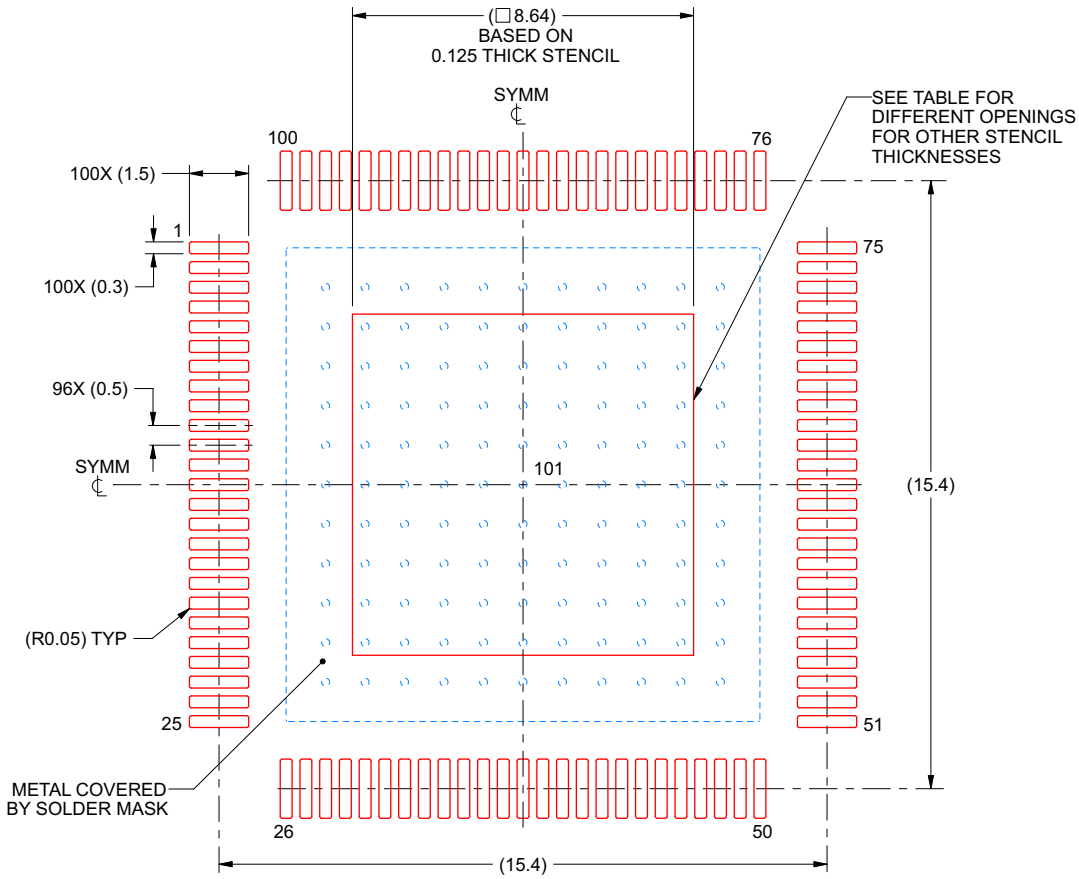

SOLDER PASTE EXAMPLE
EXPOSED PAD
100% PRINTED SOLDER COVERAGE BY AREA
SCALE:6X

STENCIL THICKNESS	SOLDER STENCIL OPENING
0.1	9.66 X 9.66
0.125	8.64 X 8.64 (SHOWN)
0.150	7.89 X 7.89
0.175	7.3 X 7.3

4223383/A 04/2017

NOTES: (continued)

11. Laser cutting apertures with trapezoidal walls and rounded corners may offer better paste release. IPC-7525 may have alternate design recommendations.
12. Board assembly site may have different recommendations for stencil design.

版权 © 2014–2020, Texas Instruments Incorporated

PACKAGE OUTLINE

PTP0176F

PowerPAD™ HLQFP - 1.6 mm max height

PLASTIC QUAD FLATPACK

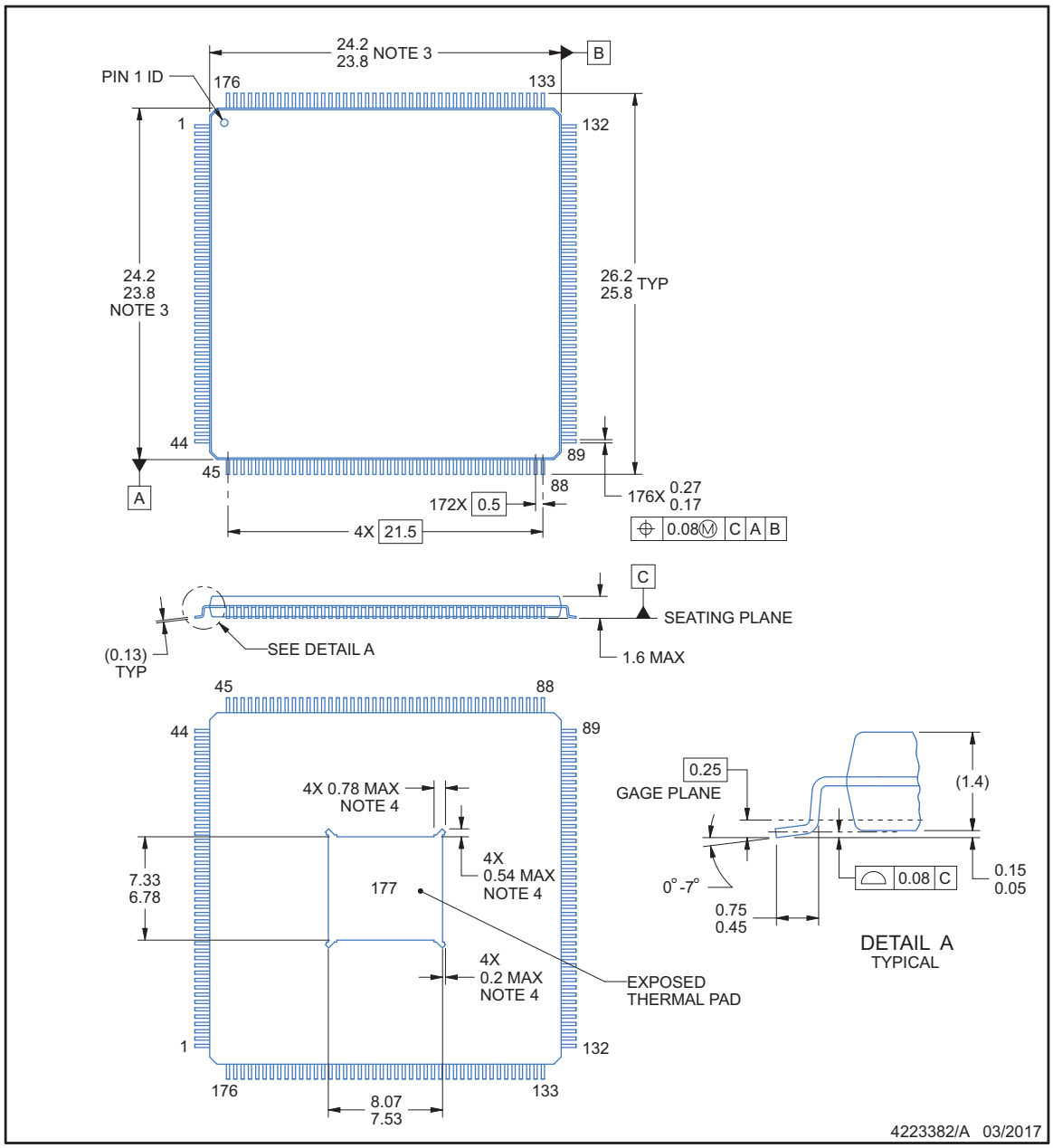

PowerPAD is a trademark of Texas Instruments.

NOTES:

1. All linear dimensions are in millimeters. Any dimensions in parenthesis are for reference only. Dimensioning and tolerancing per ASME Y14.5M.
2. This drawing is subject to change without notice.
3. This dimension does not include mold flash, protrusions, or gate burrs.
4. Strap features my not present.
5. Reference JEDEC registration MS-026.

版权 © 2014–2020, Texas Instruments Incorporated

EXAMPLE BOARD LAYOUT

PTP0176F

PowerPAD™ HLQFP - 1.6 mm max height

PLASTIC QUAD FLATPACK

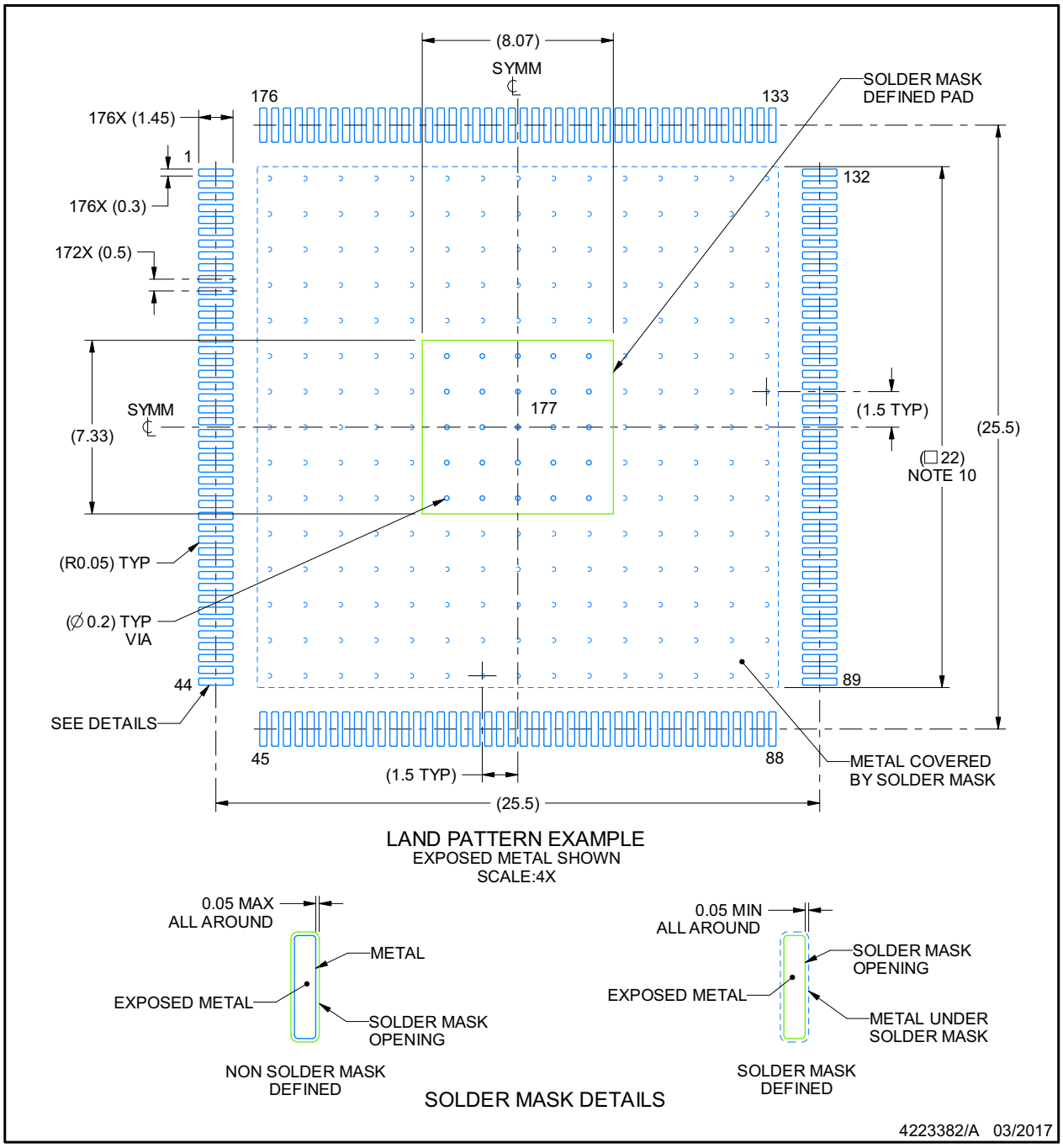

NOTES: (continued)

6. Publication IPC-7351 may have alternate designs.
7. Solder mask tolerances between and around signal pads can vary based on board fabrication site.
8. This package is designed to be soldered to a thermal pad on the board. See technical brief, Powerpad thermally enhanced package, Texas Instruments Literature No. SLMA002 (www.ti.com/lit/slma002) and SLMA004 (www.ti.com/lit/slma004).
9. Vias are optional depending on application, refer to device data sheet. It is recommended that vias under paste be filled, plugged or tented.
10. Size of metal pad may vary due to creepage requirement.

EXAMPLE STENCIL DESIGN

PTP0176F **PowerPAD™ HLQFP - 1.6 mm max height**

PLASTIC QUAD FLATPACK

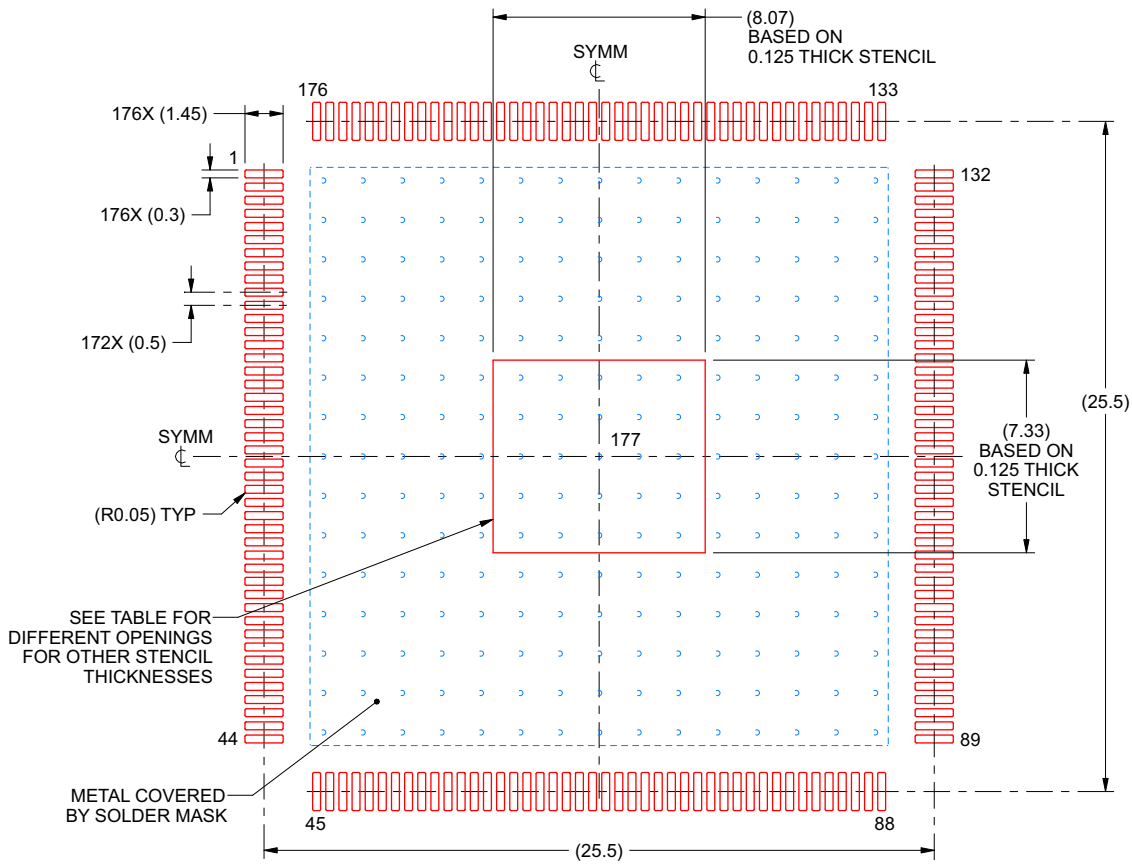

SOLDER PASTE EXAMPLE
EXPOSED PAD
100% PRINTED SOLDER COVERAGE BY AREA
SCALE:4X

STENCIL THICKNESS	SOLDER STENCIL OPENING
0.1	9.02 X 8.2
0.125	8.07 X 7.33 (SHOWN)
0.150	7.37 X 6.69
0.175	6.82 X 6.2

4223382/A 03/2017

NOTES: (continued)

11. Laser cutting apertures with trapezoidal walls and rounded corners may offer better paste release. IPC-7525 may have alternate design recommendations.
12. Board assembly site may have different recommendations for stencil design.

版权 © 2014–2020, Texas Instruments Incorporated

PACKAGING INFORMATION

Orderable Device	Status (1)	Package Type	Package Drawing	Pins	Package Qty	Eco Plan (2)	Lead finish/ Ball material (6)	MSL Peak Temp (3)	Op Temp (°C)	Device Marking (4/5)	Samples
TMS320F28374SPTPS	ACTIVE	HLQFP	PTP	176	40	RoHS & Green	NIPDAU	Level-3-260C-168 HR	-40 to 125	TMS320 F28374SPTPS	Samples
TMS320F28374SPTPSR	ACTIVE	HLQFP	PTP	176	200	RoHS & Green	NIPDAU	Level-3-260C-168 HR	-40 to 125	TMS320 F28374SPTPS	Samples
TMS320F28374SPTPT	ACTIVE	HLQFP	PTP	176	40	RoHS & Green	NIPDAU	Level-3-260C-168 HR	-40 to 105	TMS320 F28374SPTPT	Samples
TMS320F28374SPZPS	ACTIVE	HTQFP	PZP	100	90	RoHS & Green	NIPDAU	Level-3-260C-168 HR	-40 to 125	TMS320 F28374SPZPS	Samples
TMS320F28374SPZPT	ACTIVE	HTQFP	PZP	100	90	RoHS & Green	NIPDAU	Level-3-260C-168 HR	-40 to 105	TMS320 F28374SPZPT	Samples
TMS320F28374SZWTS	ACTIVE	NFBGA	ZWT	337	90	RoHS & Green	SNAGCU	Level-3-260C-168 HR	-40 to 125	TMS320 F28374SZWTS	Samples
TMS320F28374SZWTT	ACTIVE	NFBGA	ZWT	337	90	RoHS & Green	SNAGCU	Level-3-260C-168 HR	-40 to 105	TMS320 F28374SZWTT	Samples
TMS320F28374SZWTTR	ACTIVE	NFBGA	ZWT	337	1000	RoHS & Green	SNAGCU	Level-3-260C-168 HR	-40 to 105	TMS320 F28374SZWTT	Samples
TMS320F28375SPTPS	ACTIVE	HLQFP	PTP	176	40	RoHS & Green	NIPDAU	Level-3-260C-168 HR	-40 to 125	TMS320 F28375SPTPS	Samples
TMS320F28375SPTPT	ACTIVE	HLQFP	PTP	176	40	RoHS & Green	NIPDAU	Level-3-260C-168 HR	-40 to 105	TMS320 F28375SPTPT	Samples
TMS320F28375SPZPQ	ACTIVE	HTQFP	PZP	100	90	RoHS & Green	NIPDAU	Level-3-260C-168 HR	-40 to 125	TMS320 F28375SPZPQ	Samples
TMS320F28375SPZPQR	ACTIVE	HTQFP	PZP	100	1000	RoHS & Green	NIPDAU	Level-3-260C-168 HR	-40 to 125	TMS320 F28375SPZPQ	Samples
TMS320F28375SPZPS	ACTIVE	HTQFP	PZP	100	90	RoHS & Green	NIPDAU	Level-3-260C-168 HR	-40 to 125	TMS320 F28375SPZPS	Samples
TMS320F28375SPZPT	ACTIVE	HTQFP	PZP	100	90	RoHS & Green	NIPDAU	Level-3-260C-168 HR	-40 to 105	TMS320 F28375SPZPT	Samples
TMS320F28375SZWTS	ACTIVE	NFBGA	ZWT	337	90	RoHS & Green	SNAGCU	Level-3-260C-168 HR	-40 to 125	TMS320 F28375SZWTS	Samples
TMS320F28375SZWTT	ACTIVE	NFBGA	ZWT	337	90	RoHS & Green	SNAGCU	Level-3-260C-168 HR	-40 to 105	TMS320 F28375SZWTT	Samples
TMS320F28376SPTPS	ACTIVE	HLQFP	PTP	176	40	RoHS & Green	NIPDAU	Level-3-260C-168 HR	-40 to 125	TMS320	Samples

Orderable Device	Status (1)	Package Type	Package Drawing	Pins	Package Qty	Eco Plan (2)	Lead finish/ Ball material (6)	MSL Peak Temp (3)	Op Temp (°C)	Device Marking (4/5)	Samples
										F28376SPTPS	
TMS320F28376SPTPT	ACTIVE	HLQFP	PTP	176	40	RoHS & Green	NIPDAU	Level-3-260C-168 HR	-40 to 105	TMS320 F28376SPTPT	Samples
TMS320F28376SPZPS	ACTIVE	HTQFP	PZP	100	90	RoHS & Green	NIPDAU	Level-3-260C-168 HR	-40 to 125	TMS320 F28376SPZPS	Samples
TMS320F28376SPZPT	ACTIVE	HTQFP	PZP	100	90	RoHS & Green	NIPDAU	Level-3-260C-168 HR	-40 to 105	TMS320 F28376SPZPT	Samples
TMS320F28376SZWTS	ACTIVE	NFBGA	ZWT	337	90	RoHS & Green	SNAGCU	Level-3-260C-168 HR	-40 to 125	TMS320 F28376SZWTS	Samples
TMS320F28376SZWTT	ACTIVE	NFBGA	ZWT	337	90	RoHS & Green	SNAGCU	Level-3-260C-168 HR	-40 to 105	TMS320 F28376SZWTT	Samples
TMS320F28377SPTPQ	ACTIVE	HLQFP	PTP	176	40	RoHS & Green	NIPDAU	Level-3-260C-168 HR	-40 to 125	TMS320 F28377SPTPQ	Samples
TMS320F28377SPTPS	ACTIVE	HLQFP	PTP	176	40	RoHS & Green	NIPDAU	Level-3-260C-168 HR	-40 to 125	TMS320 F28377SPTPS	Samples
TMS320F28377SPTPT	ACTIVE	HLQFP	PTP	176	40	RoHS & Green	NIPDAU	Level-3-260C-168 HR	-40 to 105	TMS320 F28377SPTPT	Samples
TMS320F28377SPZPQ	ACTIVE	HTQFP	PZP	100	90	RoHS & Green	NIPDAU	Level-3-260C-168 HR	-40 to 125	TMS320 F28377SPZPQ	Samples
TMS320F28377SPZPS	ACTIVE	HTQFP	PZP	100	90	RoHS & Green	NIPDAU	Level-3-260C-168 HR	-40 to 125	TMS320 F28377SPZPS	Samples
TMS320F28377SPZPT	ACTIVE	HTQFP	PZP	100	90	RoHS & Green	NIPDAU	Level-3-260C-168 HR	-40 to 105	TMS320 F28377SPZPT	Samples
TMS320F28377SZWTQ	ACTIVE	NFBGA	ZWT	337	90	RoHS & Green	SNAGCU	Level-3-260C-168 HR	-40 to 125	TMS320 F28377SZWTQ	Samples
TMS320F28377SZWTS	ACTIVE	NFBGA	ZWT	337	90	RoHS & Green	SNAGCU	Level-3-260C-168 HR	-40 to 125	TMS320 F28377SZWTS	Samples
TMS320F28377SZWTT	ACTIVE	NFBGA	ZWT	337	90	RoHS & Green	SNAGCU	Level-3-260C-168 HR	-40 to 105	TMS320 F28377SZWTT	Samples
TMS320F28378SPTPS	ACTIVE	HLQFP	PTP	176	40	RoHS & Green	NIPDAU	Level-3-260C-168 HR	-40 to 125	TMS320 F28378SPTPS	Samples
TMS320F28378SPZPS	ACTIVE	HTQFP	PZP	100	90	RoHS & Green	NIPDAU	Level-3-260C-168 HR	-40 to 125	TMS320 F28378SPZPS	Samples
TMS320F28379SPTPS	ACTIVE	HLQFP	PTP	176	40	RoHS & Green	NIPDAU	Level-3-260C-168 HR	-40 to 125	TMS320 F28379SPTPS	Samples

Orderable Device	Status (1)	Package Type	Package Drawing	Pins	Package Qty	Eco Plan (2)	Lead finish/ Ball material (6)	MSL Peak Temp (3)	Op Temp (°C)	Device Marking (4/5)	Samples
TMS320F28379SPTPT	ACTIVE	HLQFP	PTP	176	40	RoHS & Green	NIPDAU	Level-3-260C-168 HR	-40 to 105	TMS320 F28379SPTPT	Samples
TMS320F28379SPZPS	ACTIVE	HTQFP	PZP	100	90	RoHS & Green	NIPDAU	Level-3-260C-168 HR	-40 to 125	TMS320 F28379SPZPS	Samples
TMS320F28379SPZPT	ACTIVE	HTQFP	PZP	100	90	RoHS & Green	NIPDAU	Level-3-260C-168 HR	-40 to 105	TMS320 F28379SPZPT	Samples
TMS320F28379SZWTS	ACTIVE	NFBGA	ZWT	337	90	RoHS & Green	SNAGCU	Level-3-260C-168 HR	-40 to 125	TMS320 F28379SZWTS	Samples
TMS320F28379SZWTT	ACTIVE	NFBGA	ZWT	337	90	RoHS & Green	SNAGCU	Level-3-260C-168 HR	-40 to 105	TMS320 F28379SZWTT	Samples

(1) The marketing status values are defined as follows:
ACTIVE: Product device recommended for new designs.
LIFEBUY: TI has announced that the device will be discontinued, and a lifetime-buy period is in effect.
NRND: Not recommended for new designs. Device is in production to support existing customers, but TI does not recommend using this part in a new design.
PREVIEW: Device has been announced but is not in production. Samples may or may not be available.
OBSOLETE: TI has discontinued the production of the device.

(2) **RoHS:** TI defines "RoHS" to mean semiconductor products that are compliant with the current EU RoHS requirements for all 10 RoHS substances, including the requirement that RoHS substance do not exceed 0.1% by weight in homogeneous materials. Where designed to be soldered at high temperatures, "RoHS" products are suitable for use in specified lead-free processes. TI may reference these types of products as "Pb-Free".
RoHS Exempt: TI defines "RoHS Exempt" to mean products that contain lead but are compliant with EU RoHS pursuant to a specific EU RoHS exemption.
Green: TI defines "Green" to mean the content of Chlorine (Cl) and Bromine (Br) based flame retardants meet JS709B low halogen requirements of <=1000ppm threshold. Antimony trioxide based flame retardants must also meet the <=1000ppm threshold requirement.

(3) MSL, Peak Temp. - The Moisture Sensitivity Level rating according to the JEDEC industry standard classifications, and peak solder temperature.

(4) There may be additional marking, which relates to the logo, the lot trace code information, or the environmental category on the device.

(5) Multiple Device Markings will be inside parentheses. Only one Device Marking contained in parentheses and separated by a "~" will appear on a device. If a line is indented then it is a continuation of the previous line and the two combined represent the entire Device Marking for that device.

(6) Lead finish/Ball material - Orderable Devices may have multiple material finish options. Finish options are separated by a vertical ruled line. Lead finish/Ball material values may wrap to two lines if the finish value exceeds the maximum column width.

Important Information and Disclaimer: The information provided on this page represents TI's knowledge and belief as of the date that it is provided. TI bases its knowledge and belief on information provided by third parties, and makes no representation or warranty as to the accuracy of such information. Efforts are underway to better integrate information from third parties. TI has taken and continues to take reasonable steps to provide representative and accurate information but may not have conducted destructive testing or chemical analysis on incoming materials and chemicals. TI and TI suppliers consider certain information to be proprietary, and thus CAS numbers and other limited information may not be available for release.

In no event shall TI's liability arising out of such information exceed the total purchase price of the TI part(s) at issue in this document sold by TI to Customer on an annual basis.

TAPE AND REEL INFORMATION

REEL DIMENSIONS

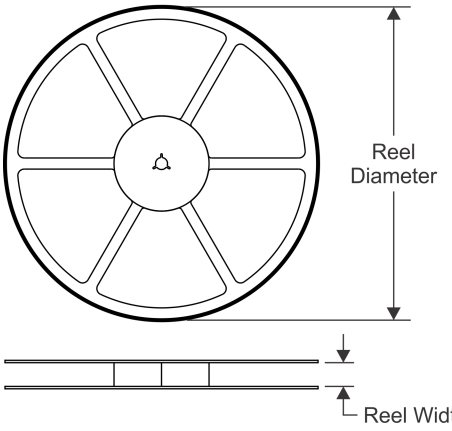

TAPE DIMENSIONS

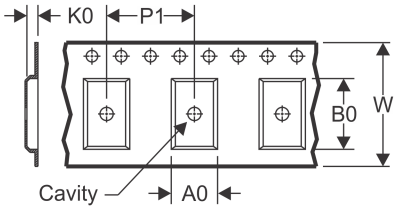

A0	Dimension designed to accommodate the component width
B0	Dimension designed to accommodate the component length
K0	Dimension designed to accommodate the component thickness
W	Overall width of the carrier tape
P1	Pitch between successive cavity centers

QUADRANT ASSIGNMENTS FOR PIN 1 ORIENTATION IN TAPE

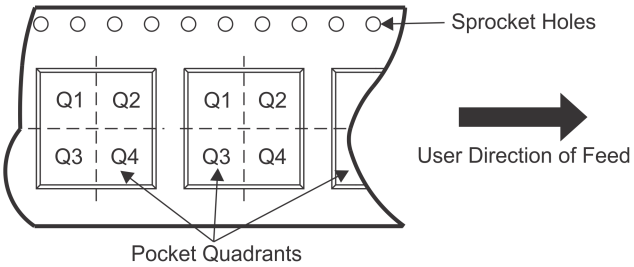

*All dimensions are nominal

Device	Package Type	Package Drawing	Pins	SPQ	Reel Diameter (mm)	Reel Width W1 (mm)	A0 (mm)	B0 (mm)	K0 (mm)	P1 (mm)	W (mm)	Pin1 Quadrant
TMS320F28375SPZPQR	HTQFP	PZP	100	1000	330.0	24.4	17.0	17.0	1.5	20.0	24.0	Q2

TAPE AND REEL BOX DIMENSIONS

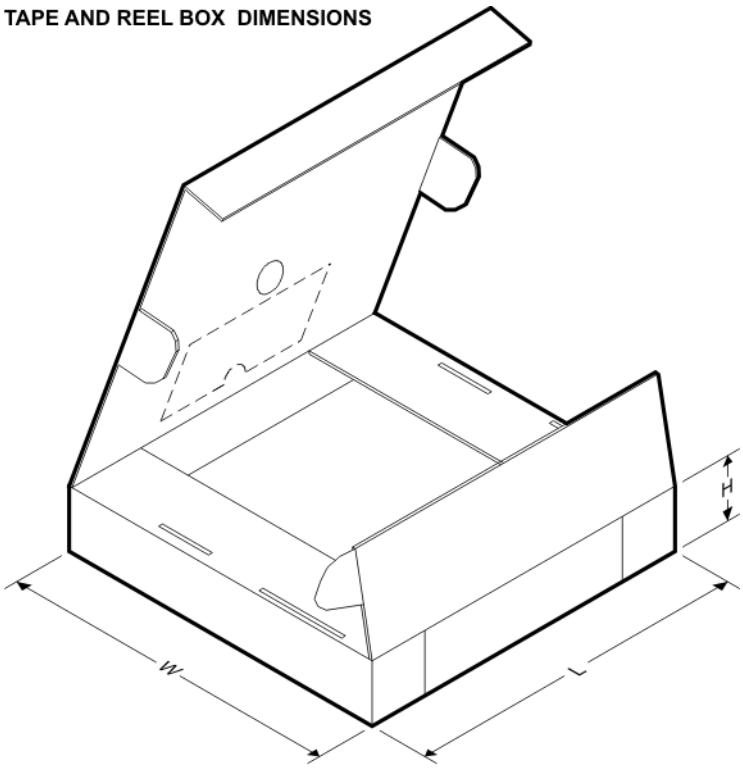

*All dimensions are nominal

Device	Package Type	Package Drawing	Pins	SPQ	Length (mm)	Width (mm)	Height (mm)
TMS320F28375SPZPQR	HTQFP	PZP	100	1000	367.0	367.0	55.0

TRAY

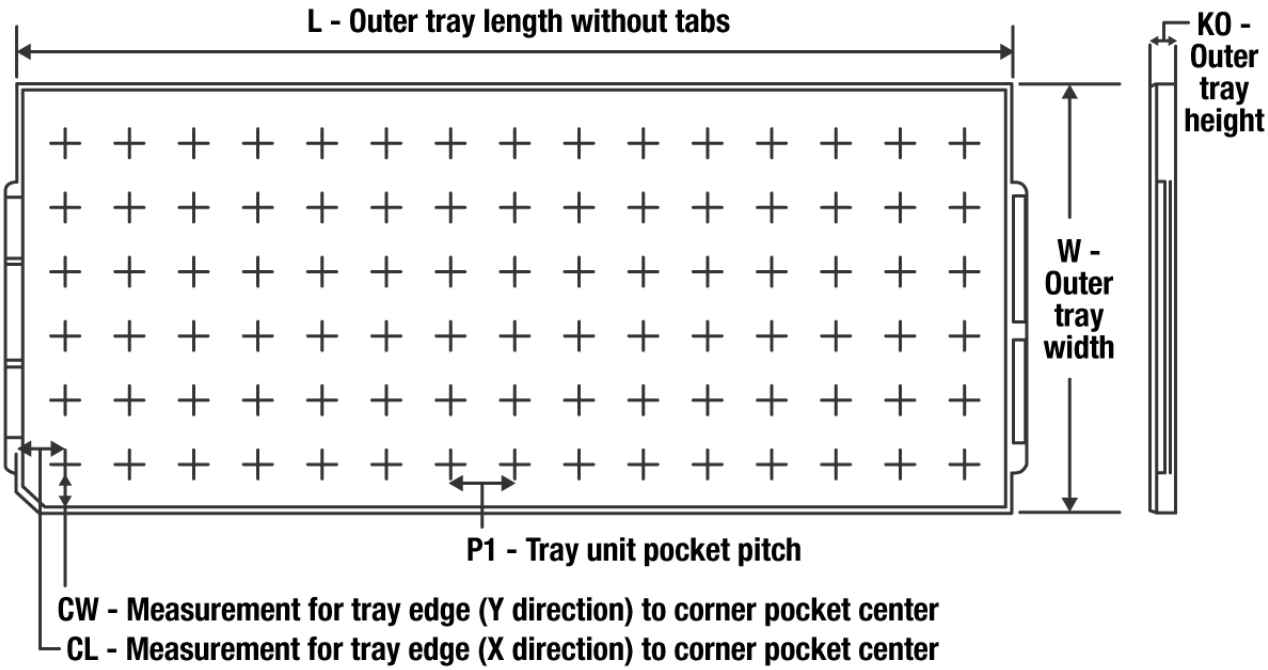

Chamfer on Tray corner indicates Pin 1 orientation of packed units.

*All dimensions are nominal

Device	Package Name	Package Type	Pins	SPQ	Unit array matrix	Max temperature (°C)	L (mm)	W (mm)	K0 (µm)	P1 (mm)	CL (mm)	CW (mm)
TMS320F28374SPTPT	PTP	HLQFP	176	40	4x10	150	315	135.9	7620	20.7	30.4	20.7
TMS320F28374SPZPT	PZP	HTQFP	100	90	6 X 15	150	315	135.9	7620	15.4	20.3	21
TMS320F28374SZWTT	ZWT	NFBGA	337	90	6 X 15	150	315	135.9	7620	20	17.5	15.45
TMS320F28375SPTPS	PTP	HLQFP	176	40	4x10	150	315	135.9	7620	20.7	30.4	20.7
TMS320F28375SPTPT	PTP	HLQFP	176	40	4x10	150	315	135.9	7620	20.7	30.4	20.7
TMS320F28375SPZPQ	PZP	HTQFP	100	90	6 X 15	150	315	135.9	7620	15.4	20.3	21
TMS320F28375SPZPT	PZP	HTQFP	100	90	6 X 15	150	315	135.9	7620	15.4	20.3	21
TMS320F28375SZWTT	ZWT	NFBGA	337	90	6 X 15	150	315	135.9	7620	20	17.5	15.45
TMS320F28376SPTPT	PTP	HLQFP	176	40	4x10	150	315	135.9	7620	20.7	30.4	20.7
TMS320F28376SZWTT	ZWT	NFBGA	337	90	6 X 15	150	315	135.9	7620	20	17.5	15.45
TMS320F28377SPTPQ	PTP	HLQFP	176	40	4x10	150	315	135.9	7620	20.7	30.4	20.7
TMS320F28377SPTPS	PTP	HLQFP	176	40	4x10	150	315	135.9	7620	20.7	30.4	20.7
TMS320F28377SPTPT	PTP	HLQFP	176	40	4x10	150	315	135.9	7620	20.7	30.4	20.7
TMS320F28377SPZPQ	PZP	HTQFP	100	90	6 X 15	150	315	135.9	7620	15.4	20.3	21
TMS320F28377SPZPS	PZP	HTQFP	100	90	6 X 15	150	315	135.9	7620	15.4	20.3	21
TMS320F28377SPZPT	PZP	HTQFP	100	90	6 X 15	150	315	135.9	7620	15.4	20.3	21
TMS320F28377SZWTQ	ZWT	NFBGA	337	90	6 X 15	150	315	135.9	7620	20	17.5	15.45

Device	Package Name	Package Type	Pins	SPQ	Unit array matrix	Max temperature (°C)	L (mm)	W (mm)	K0 (µm)	P1 (mm)	CL (mm)	CW (mm)
TMS320F28377SZWTS	ZWT	NFBGA	337	90	6 X 15	150	315	135.9	7620	20	17.5	15.45
TMS320F28377SZWTT	ZWT	NFBGA	337	90	6 X 15	150	315	135.9	7620	20	17.5	15.45
TMS320F28378SPTPS	PTP	HLQFP	176	40	4x10	150	315	135.9	7620	20.7	30.4	20.7
TMS320F28378SPZPS	PZP	HTQFP	100	90	6 X 15	150	315	135.9	7620	15.4	20.3	21
TMS320F28379SPTPS	PTP	HLQFP	176	40	4x10	150	315	135.9	7620	20.7	30.4	20.7
TMS320F28379SPTPT	PTP	HLQFP	176	40	4x10	150	315	135.9	7620	20.7	30.4	20.7
TMS320F28379SPZPS	PZP	HTQFP	100	90	6 X 15	150	315	135.9	7620	15.4	20.3	21
TMS320F28379SPZPT	PZP	HTQFP	100	90	6 X 15	150	315	135.9	7620	15.4	20.3	21
TMS320F28379SZWTS	ZWT	NFBGA	337	90	6 X 15	150	315	135.9	7620	20	17.5	15.45
TMS320F28379SZWTT	ZWT	NFBGA	337	90	6 X 15	150	315	135.9	7620	20	17.5	15.45

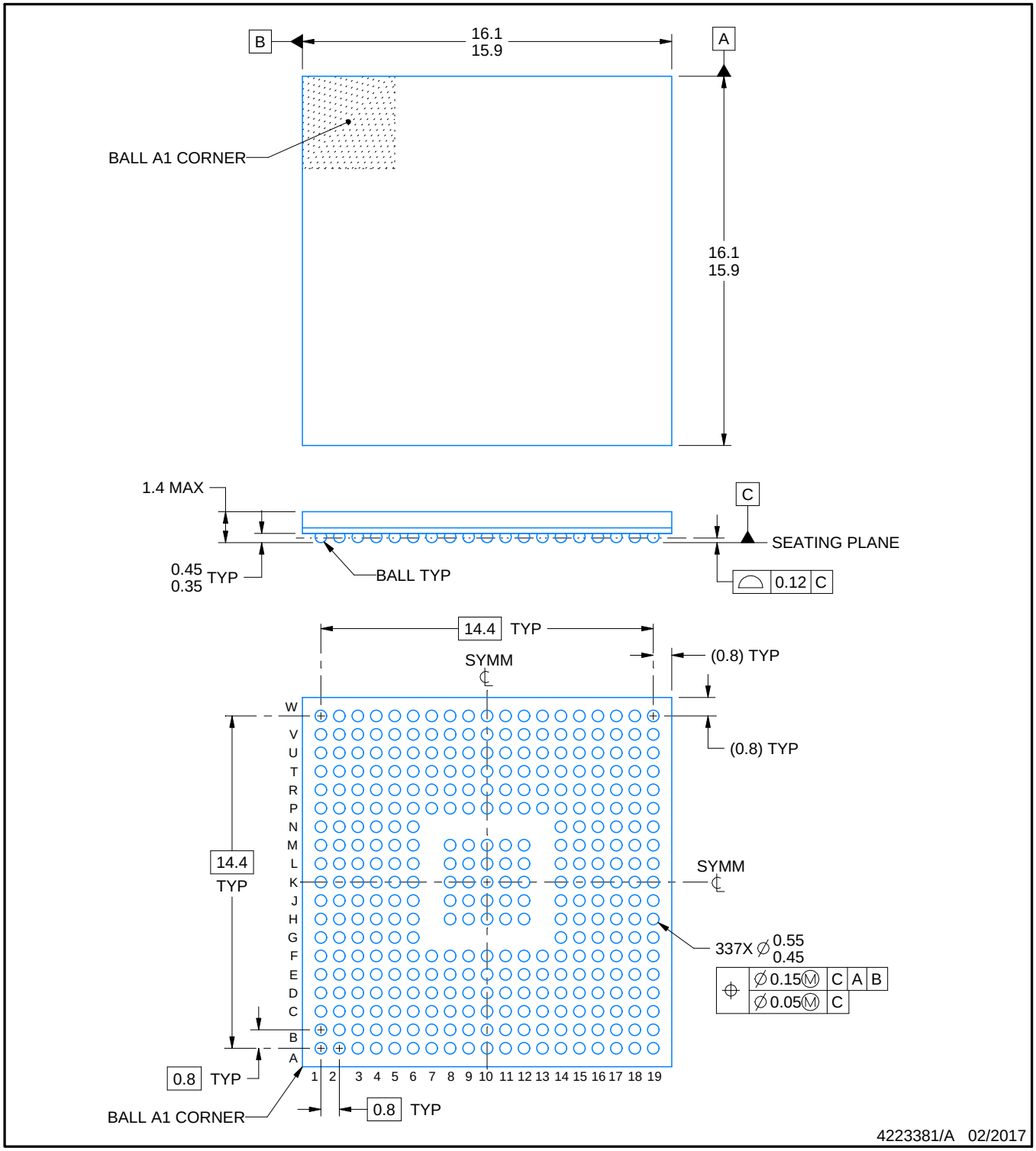

NOTES:

1. All linear dimensions are in millimeters. Any dimensions in parenthesis are for reference only. Dimensioning and tolerancing per ASME Y14.5M.
2. This drawing is subject to change without notice.

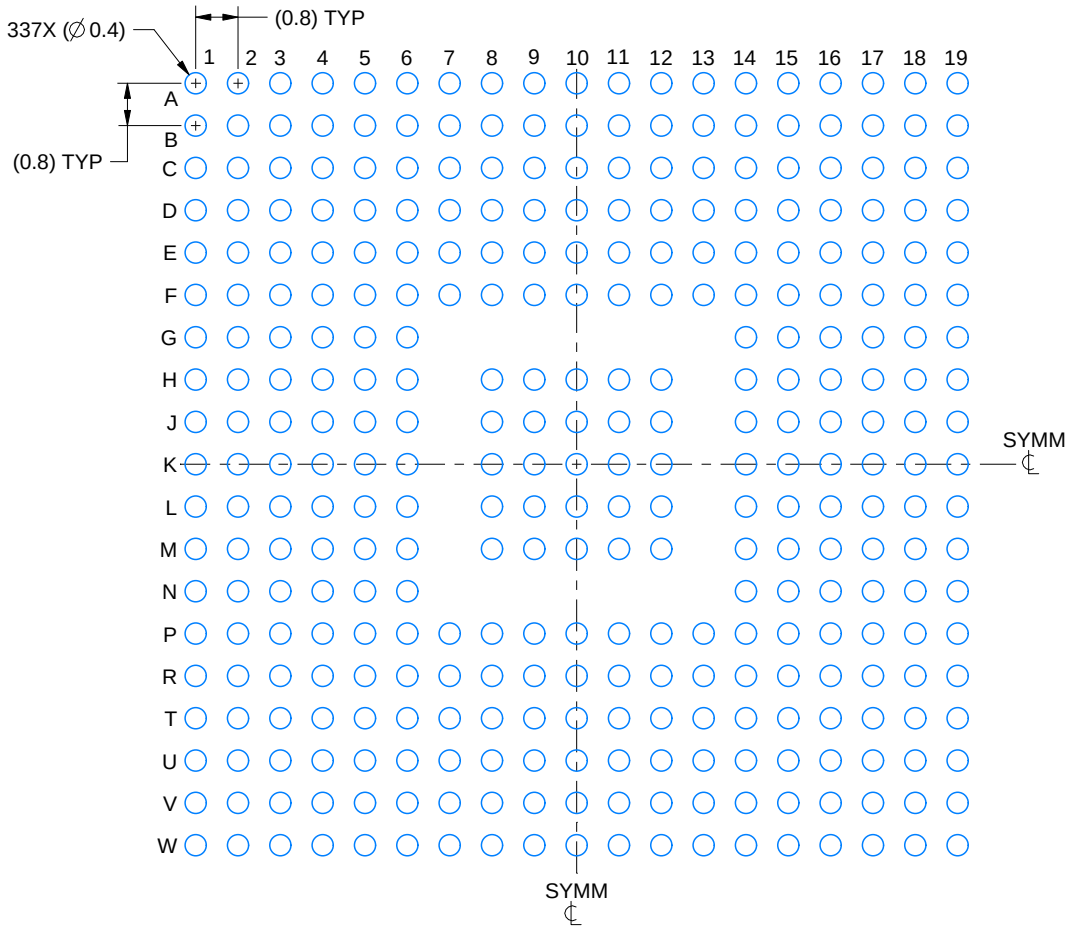

LAND PATTERN EXAMPLE
EXPOSED METAL SHOWN
SCALE:7X

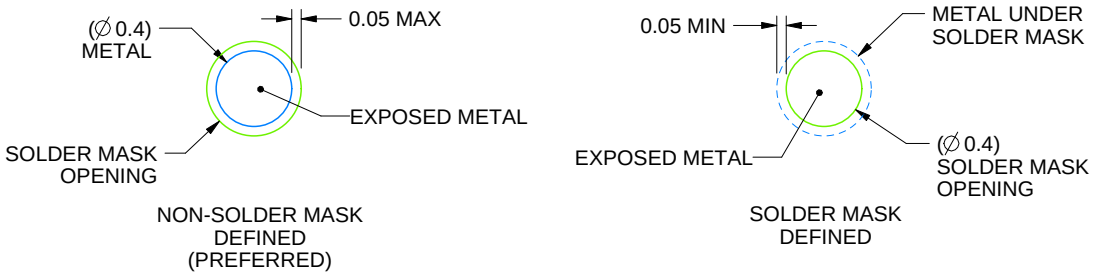

SOLDER MASK DETAILS
NOT TO SCALE

4223381/A 02/2017

NOTES: (continued)

3. Final dimensions may vary due to manufacturing tolerance considerations and also routing constraints.
For information, see Texas Instruments literature number SPRAA99 (www.ti.com/lit/spraa99).

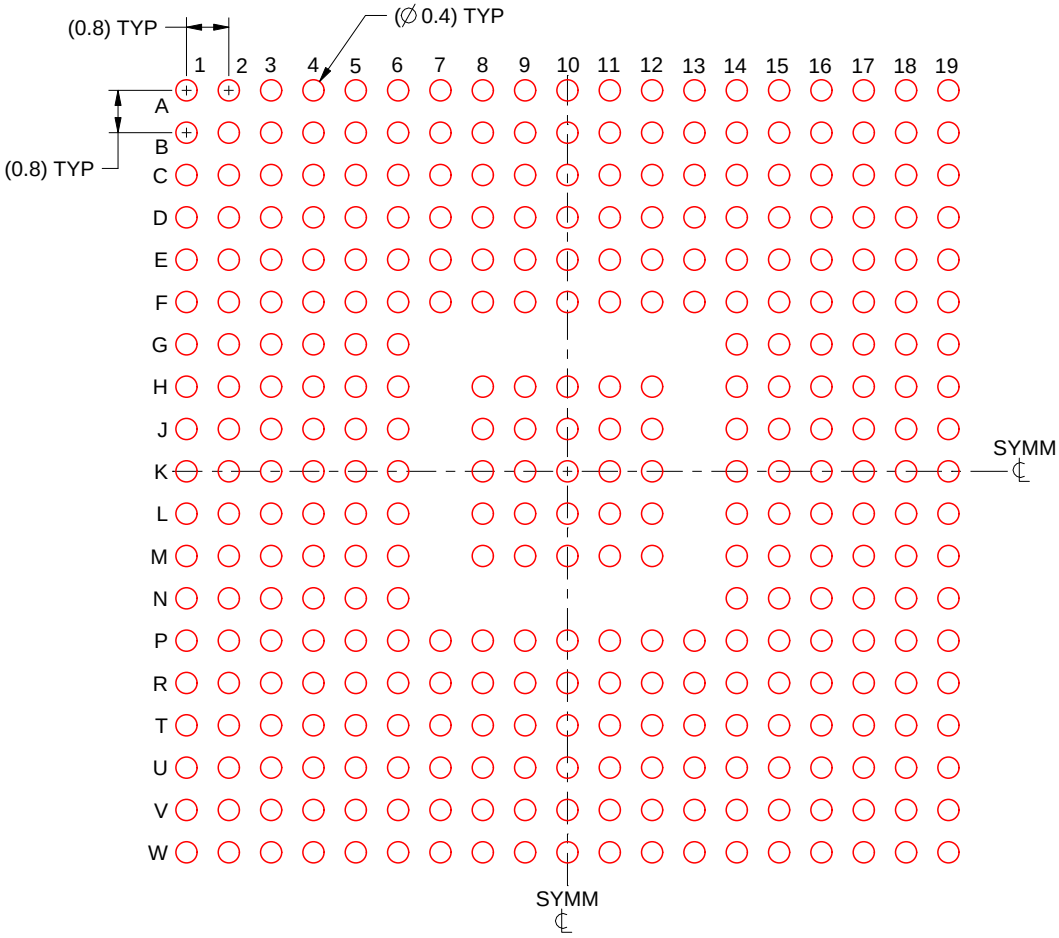

SOLDER PASTE EXAMPLE
BASED ON 0.15 mm THICK STENCIL
SCALE:7X

4223381/A 02/2017

NOTES: (continued)

4. Laser cutting apertures with trapezoidal walls and rounded corners may offer better paste release.

重要声明和免责声明

TI“按原样”提供技术和可靠性数据（包括数据表）、设计资源（包括参考设计）、应用或其他设计建议、网络工具、安全信息和其他资源，不保证没有瑕疵且不做出任何明示或暗示的担保，包括但不限于对适销性、某特定用途方面的适用性或不侵犯任何第三方知识产权的暗示担保。

这些资源可供使用 TI 产品进行设计的熟练开发人员使用。您将自行承担以下全部责任：(1) 针对您的应用选择合适的 TI 产品，(2) 设计、验证并测试您的应用，(3) 确保您的应用满足相应标准以及任何其他功能安全、信息安全、监管或其他要求。

这些资源如有变更，恕不另行通知。TI 授权您仅可将这些资源用于研发本资源所述的 TI 产品的应用。严禁对这些资源进行其他复制或展示。您无权使用任何其他 TI 知识产权或任何第三方知识产权。您应全额赔偿因在这些资源的使用中对 TI 及其代表造成的任何索赔、损害、成本、损失和债务，TI 对此概不负责。

TI 提供的产品受 TI 的销售条款或 ti.com 上其他适用条款/TI 产品随附的其他适用条款的约束。TI 提供这些资源并不会扩展或以其他方式更改 TI 针对 TI 产品发布的适用的担保或担保免责声明。

TI 反对并拒绝您可能提出的任何其他或不同的条款。

邮寄地址：Texas Instruments, Post Office Box 655303, Dallas, Texas 75265
Copyright © 2022，德州仪器 (TI) 公司