TPS6211x 17-V, 1.5-A, Synchronous Step-Down Converter

1 Features

- High-Efficiency Synchronous Step-Down Converter With up to 95% Efficiency
- 3.1-V to 17-V Operating Input Voltage Range
- Adjustable Output Voltage Range: 1.2 V to 16 V
- Fixed Output Voltage Options Available in 3.3 V and 5 V
- Synchronizable to External Clock: Up to 1.4 MHz
- Up to 1.5-A Output Current
- High Efficiency Over a Wide Load-Current Range Due to PFM/PWM Operation Mode
- 100% Maximum Duty Cycle for Lowest Dropout
- 20-µA Quiescent Current (Typical)
- Overtemperature and Overcurrent Protected
- Available in 16-Pin VQFN Package

2 Applications

- Point-of-Load Regulation From 12-V Buses
- Organizers, PDAs, and Handheld PCs
- Handheld Scanners

3 Description

The TPS6211x devices are a family of low-noise synchronous step-down DC-DC converters that are ideally suited for systems powered from a 2- to 4-cell Li-ion battery or from a 12-V or 15-V rail.

The TPS6211x devices are synchronous pulse width modulation (PWM) converters with integrated N- and P-channel power MOSFET switches. Synchronous rectification is used to increase efficiency and to reduce external component count. To achieve highest efficiency over a wide load-current range, the converter enters a power-saving, pulse frequency modulation (PFM) mode at light load currents. Operating frequency is typically 1 MHz, allowing the use of small inductor and capacitor values. The device can be synchronized to an external clock signal in the range of 0.8 MHz to 1.4 MHz. For low-noise operation, the converter can be operated in PWM-only mode. In shutdown mode, the current consumption is reduced to less than 2 µA. The TPS6211x family of devices are available in the 16-pin (RSA) VQFN package, and operate over a free-air temperature range of –40°C to 85°C.

Device Information(1)

PART NUMBER	PACKAGE	BODY SIZE (NOM)
TPS62110	VQFN (16)	4.00 mm × 4.00 mm
TPS62111		
TPS62112		
TPS62113		

(1) For all available packages, see the orderable addendum at the end of the data sheet.

4 Typical Application Schematic

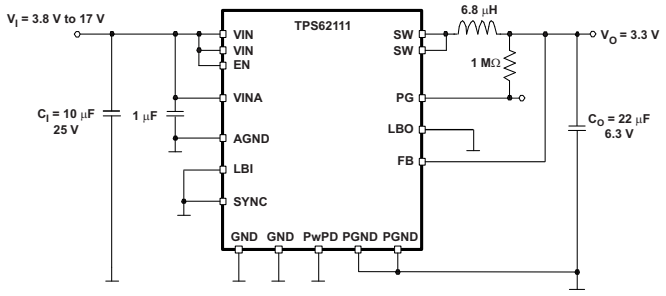

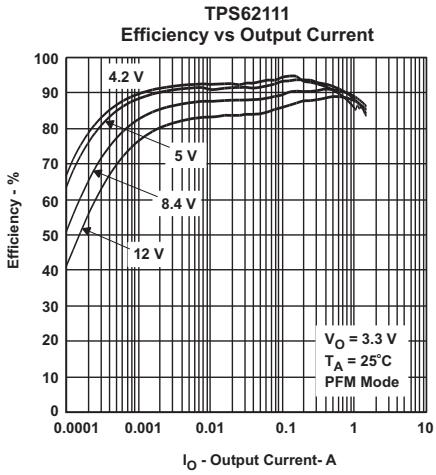

An IMPORTANT NOTICE at the end of this data sheet addresses availability, warranty, changes, use in safety-critical applications, intellectual property matters and other important disclaimers. PRODUCTION DATA.

Table of Contents

1 Features ... 1
2 Applications ... 1
3 Description ... 1
4 Typical Application Schematic ... 1
5 Revision History ... 2
6 Device Comparison Table ... 4
7 Pin Configuration and Functions ... 4
8 Specifications ... 5
8.1 Absolute Maximum Ratings ... 5
8.2 ESD Ratings ... 5
8.3 Recommended Operating Conditions ... 5
8.4 Thermal Information ... 5
8.5 Electrical Characteristics ... 6
8.6 Typical Characteristics ... 8
9 Detailed Description ... 9
9.1 Overview ... 9
9.2 Functional Block Diagram ... 10
9.3 Feature Description ... 10
9.4 Device Functional Modes ... 12
10 Application and Implementation ... 15
10.1 Application Information ... 15
10.2 Typical Applications ... 15
10.3 System Examples ... 22
11 Power Supply Recommendations ... 23
12 Layout ... 23
12.1 Layout Guidelines ... 23
12.2 Layout Example ... 24
13 Device and Documentation Support ... 25
13.1 Device Support ... 25
13.2 Related Links ... 25
13.3 Community Resources ... 25
13.4 Trademarks ... 25
13.5 Electrostatic Discharge Caution ... 25
13.6 Glossary ... 25
14 Mechanical, Packaging, and Orderable Information ... 25

5 Revision History

NOTE: Page numbers for previous revisions may differ from page numbers in the current version.

Changes from Revision D (January 2014) to Revision E	Page
• Added *Pin Configuration and Functions* section, *ESD Ratings* table, *Feature Description* section, *Device Functional Modes*, *Application and Implementation* section, *Power Supply Recommendations* section, *Layout* section, *Device and Documentation Support* section, and *Mechanical, Packaging, and Orderable Information* section	1

Changes from Revision C (October 2012) to Revision D	Page
• Changed the FUNCTIONAL BLOCK DIAGRAM to include the SYNC pin	10
• Changed the Revision History list	22

Changes from Revision B (October 2012) to Revision C	Page
• Changed ESD - HBM From: 4 kV To: 2 kV	5
• Deleted ESD - MM	5
• Changed ESD - CDM From: 1.5 kV To: 500 V	5
• Changed the CONSTANT-FREQUENCY MODE OF OPERATION (SYNC = HIGH) section	13

Changes from Revision A (February 2009) to Revision B	Page
• Changed Description text From: 2-cell Li-ion battery To: 2 to 4-cell Li-ion battery..	1
• Added text to the Terminal Functions EN pin description - Do not leave floating.	4
• Added ESD information to the ABSOLUTE MAXIMUM RATINGS table	5
• Changed From: Dissipation Ratings table To: Thermal Information table	5
• Added TPS62113 to the OUTPUT section of the Electrical Characteristics	7
• Changed Note A of the Functional Block Diagram.	10
• Changed the ENABLE section	10
• Changed the LOW-BATTERY DETECTOR (Standard Version) section	11

Copyright © 2005–2015, Texas Instruments Incorporated

- Deleted the PwPD pin from Figure 4, ... 11
- Changed the ENABLE/Low-Battery Detector (Enhanced Version) TPS62113 Only section 11
- Changed the POWER-GOOD COMPARATOR section 11
- Added the THERMAL SHUTDOWN section 12
- Changed the SOFT START section 12
- Deleted "by pulling the SYNC pin LOW." - CONSTANT-FREQUENCY MODE OF OPERATION (SYNC = HIGH) 13
- Changed 13
- Changed PwPD to ETPad in Figure 6 to Figure 21 15
- Changed the INPUT-CAPACITOR SELECTION section 18
- Changed Figure 19 and Figure 20 21
- Added section: Layout Consideration 23

6 Device Comparison Table

PACKAGED DEVICES PLASTIC VQFN 16 PIN(1) (RSA)	OUTPUT VOLTAGE	LBI/LBO FUNCTIONALITY
TPS62110	Adjustable 1.2 V to 16 V	Standard
TPS62111	Fixed 3.3 V	Standard
TPS62112	Fixed 5 V	Standard
TPS62113	Adjustable 1.2 V to 16 V	Enhanced

(1) The RSA package is available in tape and reel. Add R suffix (TPS62110RSAR) to order quantities of 3000 parts per reel. Add T suffix (TPS62110RSAT) to order quantities of 250 parts per reel.

7 Pin Configuration and Functions

RSA Package
16-Pin VQFN
Top View

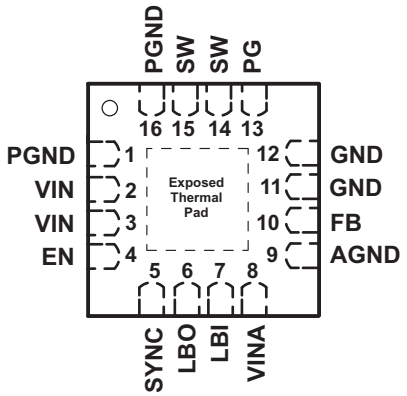

Pin Functions

PIN		I/O	DESCRIPTION
NAME	NO.		
AGND	9	I	Analog ground, connect to GND and PGND.
EN	4	I	Enable. A logic high enables the converter; logic low forces the device into shutdown mode reducing the supply current to less than 2 µA. Do not leave floating.
FB	10	I	Feedback pin for the fixed output voltage versions. Connect to V_{OUT} for these devices. For the adjustable versions, an external resistive divider is connected to this pin. The internal voltage divider is disabled for the adjustable versions.
GND	11, 12	I	Ground
LBI	7	I	Low-battery input. Do not leave floating.
LBO	6	O	Open-drain, low-battery output. This pin is pulled low if LBI is below its threshold. If not used, the pin may be left floating or connected to GND.
PG	13	O	Power good comparator output. This is an open-drain output. A pullup resistor should be connected between PG and VOUT. The output goes high when the output voltage is greater than 98.4% of the nominal value. If not used, the pin may be left floating or connected to GND.
PGND	1, 16	I	Power ground. Connect all power grounds to this pin.
SW	14, 15	O	Connect the inductor to this pin. This pin is the switch pin and connected to the drain of the internal power MOSFETS.
SYNC	5	I	Input for synchronization to external clock signal. Synchronizes the converter switching frequency to an external clock signal with CMOS level. Also controls power save mode by being tied high or low.
			SYNC = HIGH: Low-noise mode enabled, fixed-frequency PWM operation is forced
			SYNC = LOW (GND): Power save mode enabled, PFM/PWM mode enabled
VIN	2, 3	I	Supply voltage input (power stage)

Copyright © 2005–2015, Texas Instruments Incorporated

Pin Functions (continued)

PIN		I/O	DESCRIPTION
NAME	NO.		
VINA	8	I	Supply voltage input (support circuits)
Exposed Thermal Pad	–	–	Connect to AGND. Must be soldered to achieve appropriate power dissipation and mechanical reliability.

8 Specifications

8.1 Absolute Maximum Ratings

over operating free-air temperature range (unless otherwise noted) (1)

		MIN	MAX	UNIT
V_{CC}	Supply voltage at VIN, VINA	–0.3	20	V
V_I	Voltage at SW	–1	20	V
	Voltage at EN, SYNC, LBO, PG	–0.3	20	
	Voltage at LBI, FB	–0.3	7	
I_O	Output current at SW		2400	mA
T_J	Maximum junction temperature		150	°C
T_A	Operating free-air temperature	–40	85	°C
T_{stg}	Storage temperature	–65	150	°C

(1) Stresses beyond those listed under *Absolute Maximum Ratings* may cause permanent damage to the device. These are stress ratings only and functional operation of the device at these or any other conditions beyond those indicated under *Recommended Operating Conditions* is not implied. Exposure to absolute-maximum-rated conditions for extended periods may affect device reliability.

8.2 ESD Ratings

		VALUE	UNIT
$V_{(ESD)}$ Electrostatic discharge	Human body model (HBM), per ANSI/ESDA/JEDEC JS-001 (1)	±2000	V
	Charged-device model (CDM), per JEDEC specification JESD22-C101 (2)	±500	

(1) JEDEC document JEP155 states that 500-V HBM allows safe manufacturing with a standard ESD control process.
(2) JEDEC document JEP157 states that 250-V CDM allows safe manufacturing with a standard ESD control process.

8.3 Recommended Operating Conditions

		MIN	NOM	MAX	UNIT
V_{CC}	Supply voltage at VIN, VINA	3.1		17	V
	Maximum voltage at PG, LBO, EN, SYNC			17	V
T_J	Operating junction temperature	–40		125	°C

8.4 Thermal Information

THERMAL METRIC (1)		TPS6211x RSA (VQFN) 16 PINS	UNIT
$R_{\theta JA}$	Junction-to-ambient thermal resistance	48.2	°C/W
$R_{\theta JC(top)}$	Junction-to-case (top) thermal resistance	45.4	°C/W
$R_{\theta JB}$	Junction-to-board thermal resistance	16.3	°C/W
ψ_{JT}	Junction-to-top characterization parameter	0.5	°C/W
ψ_{JB}	Junction-to-board characterization parameter	16.4	°C/W
$R_{\theta JC(bot)}$	Junction-to-case (bottom) thermal resistance	3.3	°C/W

(1) For more information about traditional and new thermal metrics, see the *Semiconductor and IC Package Thermal Metrics* application report, SPRA953.

Copyright © 2005–2015, Texas Instruments Incorporated

8.5 Electrical Characteristics

V_I = 12 V, V_O = 3.3 V, I_O = 600 mA, EN = V_I, T_A = –40°C to 85°C (unless otherwise noted)

PARAMETER		TEST CONDITIONS	MIN	TYP	MAX	UNIT
SUPPLY CURRENT						
V_I	Input voltage		3.1		17	V
$I_{(Q)}$	Operating quiescent current	I_O = 0 mA, SYNC = GND, V_I = 7.2 V, T_A = 25°C (1)		20		µA
		I_O = 0 mA, SYNC = GND, V_I = 17 V (1)		23	26	
$I_{Q(LBI)}$	Quiescent current with enhanced LBI comparator version (TPS62113 only).	EN = V_I , LBI = GND		10		µA
$I_{(SD)}$	Shutdown current	EN = GND		1.5	5	µA
		EN = GND, T_A = 25°C, V_I = 7.2 V		1.5	3	
ENABLE						
V_{IH}	EN high-level input voltage		1.3			V
V_{IL}	EN low-level input voltage				0.3	V
	EN trip-point hysteresis			170		mV
I_{lkg}	EN input leakage current	EN = GND or V_I, V_I = 12 V		0.01	0.2	µA
$I_{(EN)}$	EN input current	0.6 V ≤ $V_{(EN)}$ ≤ 4 V		10	20	µA
$V_{(UVLO)}$	Undervoltage lockout threshold	Input voltage falling	2.8	3	3.1	V
	Undervoltage lockout hysteresis			250	300	mV
POWER SWITCH						
$R_{DS(ON)}$	P-channel MOSFET ON-resistance	V_I ≥ 5.4 V; I_O = 350 mA		165	250	mΩ
		V_I = 3.5 V; I_O = 200 mA		340		
		V_I = 3 V; I_O = 100 mA		490		
I_{lkg}	P-channel MOSFET leakage current	V_{DS} = 17 V		0.1	1	µA
I_{LIMF}	P-channel MOSFET current limit	V_I = 7.2 V, V_O = 3.3 V	2100	2400	2600	mA
$R_{DS(ON)}$	N-channel MOSFET ON-resistance	V_I ≥ 5.4 V; I_O = 350 mA		145	200	mΩ
		V_I = 3.5 V; I_O = 200 mA		170		
		V_I = 3 V; I_O = 100 mA		200		
I_{lkg}	N-channel MOSFET leakage current	V_{DS} = 17 V		0.1	2	µA
PG OUTPUT, LBI, LBO						
$V_{(PG)}$	Power good trip voltage			V_O – 1.6%		V
	Power good delay time	V_O ramping positive		50		µs
		V_O ramping negative		200		
V_{OL}	PG, LBO output-low voltage	$V_{(FB)}$ = 0.8 × V_O nominal, I_{OL} = 1 mA			0.3	V
I_{OL}	PG, LBO sink current			1		mA
I_{lkg}	PG, LBO output leakage current	$V_{(FB)}$ = V_O nominal, $V_{(LBI)}$ = V_I		0.01	0.25	µA
	Minimum supply voltage for valid power good, LBI, LBO signal			3		V
V_{LBI}	LBI input trip voltage	Input voltage falling		1.256		V
I_{lkg}	LBI input leakage current			10	100	nA
	LBI input trip-point accuracy				1.5%	
$V_{LBI,HYS}$	Low-battery input hysteresis			25		mV

(1) Device is not switching.

Copyright © 2005–2015, Texas Instruments Incorporated

Electrical Characteristics (continued)

V_I = 12 V, V_O = 3.3 V, I_O = 600 mA, EN = V_I, T_A = –40°C to 85°C (unless otherwise noted)

PARAMETER		TEST CONDITIONS		MIN	TYP	MAX	UNIT
OSCILLATOR							
f_S	Oscillator frequency			900	1000	1100	kHz
$f_{(SYNC)}$	Synchronization range	CMOS-logic clock signal on SYNC pin		800		1400	kHz
V_{IH}	SYNC high-level input voltage			1.5			V
V_{IL}	SYNC low-level input voltage					0.3	V
I_{lkg}	SYNC input leakage current	SYNC = GND or VIN			0.01	0.2	µA
	SYNC trip-point hysteresis				170		mV
I_{lkg}	SYNC input leakage current	0.6 V ≤ $V_{(SYNC)}$ ≤ 4 V			10	20	µA
	Duty cycle of external clock signal			30%		90%	
OUTPUT							
V_O	Adjustable output voltage range	TPS62110 TPS62113		1.153		16	V
V_{FB}	Feedback voltage	TPS62110 TPS62113			1.153		V
I_{lkg}	FB input leakage current	TPS62110 TPS62113			10	100	nA
	Feedback voltage tolerance	TPS62110 TPS62113	V_I = 3.1 V to 17 V; 0 mA < I_O < 1500 mA(2)	–2%		2%	
	Fixed output voltage tolerance(3)	TPS62111	V_I = 3.8 V to 17 V; 0 mA < I_O < 1500 mA(2)	–3%		3%	
		TPS62112	V_I = 5.5 V to 17 V; 0 mA < I_O < 1500 mA(2)	–3%		3%	
I_O	Maximum output current	V_I ≥ 3 V (once undervoltage lockout voltage exceeded)			100		mA
		V_I ≥ 3.5 V			500		
		V_I ≥ 4.3 V			1200		
		V_I ≥ 6 V			1500		
	Current into internal voltage divider for fixed voltage versions				5		µA
η	Efficiency	V_I = 7.2 V; V_O = 3.3 V; I_O = 600 mA			92%		
		V_I = 12 V, V_o = 5 V, I_o = 600 mA					
	Duty-cycle range for main switches	at 1 MHz		10%		100%	
	Minimum t_{on} time for main switch			100			ns
T_{SD}	Shutdown temperature				145		°C
	Start-up time	I_O = 800 mA, V_I = 12 V, V_o = 3.3 V			1		ms

(2) The maximum output current depends on the input voltage. See the *maximum output current* for further restrictions on the minimum input voltage.
(3) The output voltage accuracy includes line and load regulation over the full temperature range T_A = –40°C to 85°C. See *No-Load Operation*.

8.6 Typical Characteristics

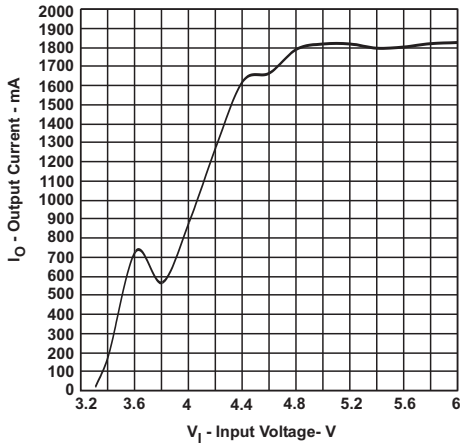

Figure 1. TPS62111 Maximum Output Current vs Input Voltage

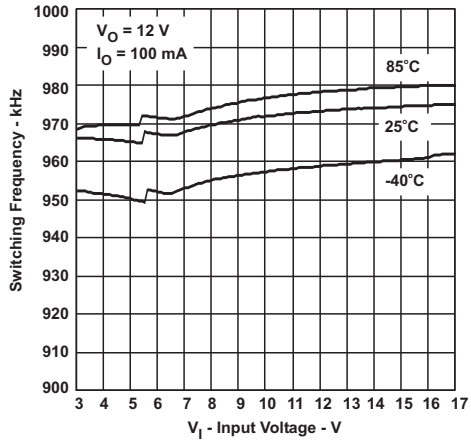

Figure 2. Switching Frequency vs Input Voltage

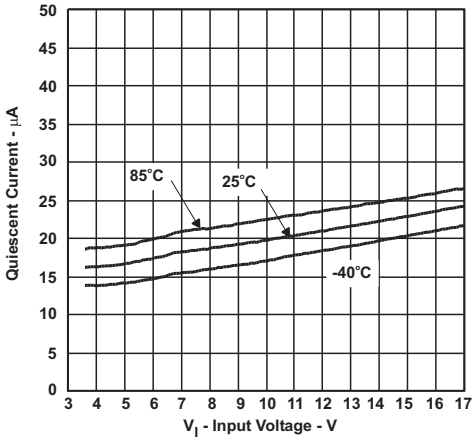

Figure 3. Quiescent Current vs Input Voltage

Copyright © 2005–2015, Texas Instruments Incorporated

9 Detailed Description

9.1 Overview

The TPS6211x family of devices are synchronous step-down converters that operate with a 1-MHz fixed-frequency pulse-width modulation (PWM) at moderate-to-heavy load currents, and enters the power-save mode at light load current.

During PWM operation, the converter uses a unique fast-response voltage-mode control scheme with input-voltage feedforward. Good line and load regulation is achieved with the use of small input and output ceramic capacitors. At the beginning of each clock cycle initiated by the clock signal (S), the P-channel MOSFET switch is turned on, and the inductor current ramps up until the comparator trips and the control logic turns the switch off. The switch is turned off by the current limit comparator if the current limit of the P-channel switch is exceeded. After the dead time prevents current shoot through, the N-channel MOSFET rectifier is turned on, and the inductor current ramps down. The next cycle is initiated by the clock signal turning off the N-channel rectifier, and turning on the P-channel switch.

The error amplifier as well as the input voltage determines the rise time of the sawtooth generator. Therefore, any change in input voltage or output voltage directly controls the duty cycle of the converter, giving a very good line- and load-transient regulation.

Copyright © 2005–2015, Texas Instruments Incorporated

9.2 Functional Block Diagram

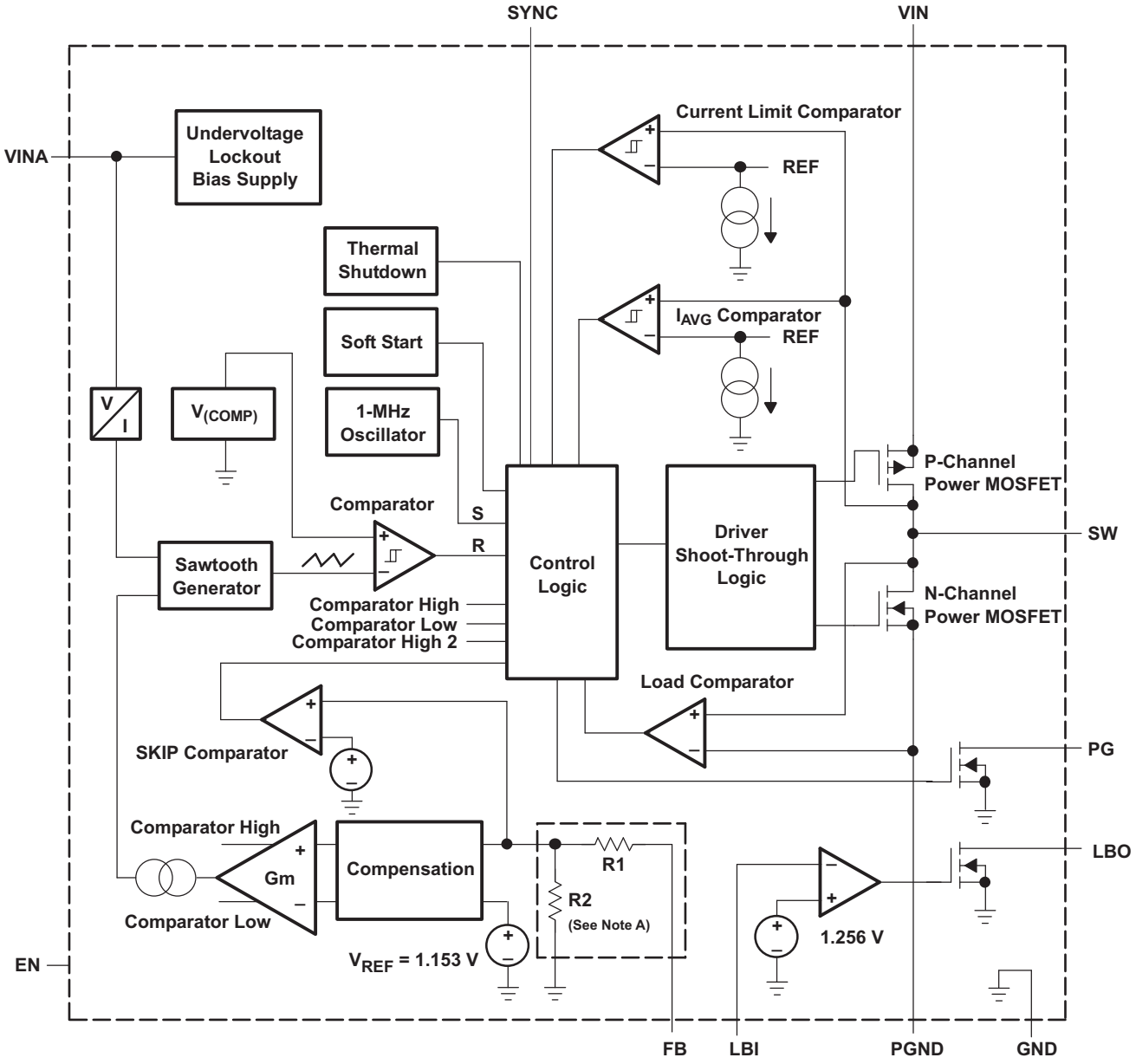

For the adjustable version (TPS62110 and TPS62113), the internal feedback divider is disabled and the FB pin is directly connected to the internal compensation block.

9.3 Feature Description

9.3.1 Enable

A logic low on EN forces the TPS6211x devices into shutdown. In shutdown, the power switch, drivers, voltage reference, oscillator, and all other functions are turned off. The LBO pin is high impedance, while PG is held low. The supply current is reduced to less than 2 µA in the shutdown mode. When the device is in thermal shutdown, the band gap is forced to be switched on even if the device is set into shutdown by pulling EN to GND.

Copyright © 2005–2015, Texas Instruments Incorporated

Feature Description (continued)

If an output voltage is present when the device is disabled, which could be due to an external voltage source or a super capacitor, the reverse leakage current is specified under electrical characteristics. Pulling the enable pin high starts up the TPS6211x devices with the soft-start. If the EN pin is connected to any voltage other than V_I or GND, an increased leakage current of typically 10 µA and up to 20 µA can occur. See *TPS6211x Driving EN and SYNC Pins* (SLVA295) for details.

9.3.2 Low-Battery Detector (Standard Version)

The low-battery output (LBO) is an open-drain type which goes low when the voltage at the low-battery input (LBI) falls below the trip point of 1.256 V ±1.5%. The voltage at which the low-battery warning is issued can be adjusted with a resistive divider as shown in Figure 4. TI recommends the sum of resistors R1 + R2 as well as the sum of resistors R5 + R6 to be in the 100-kΩ to 1-MΩ range for high efficiency at low output current. An external pullup resistor can be connected to V_O, or any other voltage rail in the voltage range of 0 V to 17 V. During start-up, the LBO output signal is invalid for the first 500 µs. LBO is high-impedance when the device is disabled. If the low-battery comparator function is not used, connect LBI to ground. The low-battery detector is disabled when the device is disabled.

When the LBI is used to supervise the battery voltage and shut down the TPS6211x devices at low-input voltages, the battery voltage rises when its current drops to zero. The implemented hysteresis on the LBI pin may not be sufficient for all types of batteries. Figure 4 shows how an additional external hysteresis can be implemented. See *Adding Hysteresis to Low-Battery Input on the TPS62113* (SLVA373) for details.

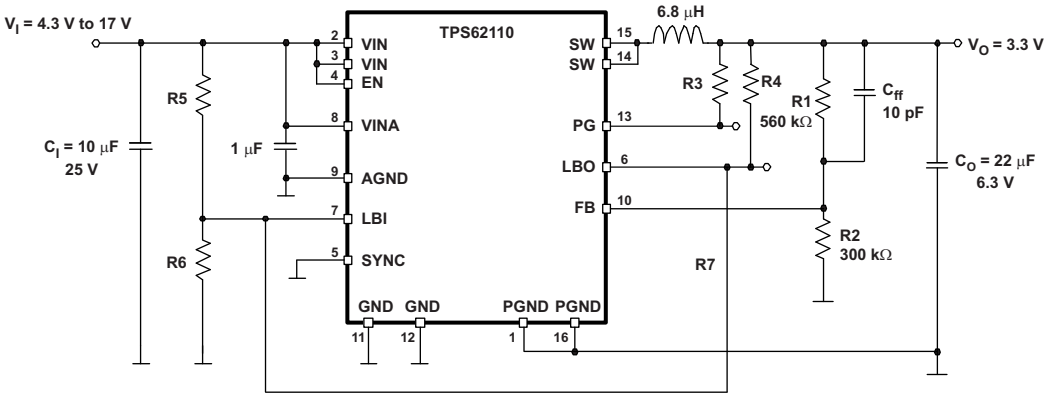

Figure 4. LBI With Increased Hysteresis

9.3.3 Enable/Low-Battery Detector - Enhanced Version (TPS62113 Only)

The TPS62113 device offers an enhanced LBI functionality to provide a precise, user-programmable undervoltage shutdown. No additional supply voltage supervisor (SVS) is needed to provide this function. When the enable (EN) pin is pulled high, only the internal bandgap voltage reference is switched on to provide a reference source for the LBI comparator. As long as the voltage at LBI is less than the LBI trip point, all other internal circuits are shut down, reducing the supply current to 10 µA. As soon as input voltage at LBI rises above the LBI trip point of 1.256 V, the device is completely enabled and starts switching.

This functionality is the only difference between the TPS62110 and TPS62113 devices.

9.3.4 Power Good Comparator

The power good (PG) comparator is an open-drain output capable of sinking 1 mA (typical). The PG is only active when the device is enabled (EN = high). When the device is disabled (EN = low), the PG pin is pulled to GND.

The PG output is only valid after a 250-µs delay when the device is enabled and the supply voltage is greater than the undervoltage lockout $V_{(UVLO)}$.

The PG pin becomes active-high when the output voltage exceeds 98.4% (typical) of its nominal value. Leave the PG pin floating or grounded when not used.

Feature Description (continued)

9.3.5 Undervoltage Lockout

The undervoltage lockout (UVLO) circuit prevents the device from misoperation at low-input voltages. It prevents the converter from turning on the switch or rectifier MOSFET under undefined conditions. The minimum input voltage to start up the TPS6211x devices is 3.4 V (worst case). The device shuts down at 2.8 V minimum.

9.3.6 Synchronization

If no clock signal is applied, the converter operates with a typical switching frequency of 1 MHz. It is possible to synchronize the converter to an external clock within a frequency range from 0.8 MHz to 1.4 MHz only. The device automatically detects the rising edge of the first clock and synchronizes immediately to the external clock. If the clock signal is stopped, the converter automatically switches back to the internal clock and continues operation. The switch over is initiated if no rising edge on the SYNC pin is detected for a duration of four clock cycles. Therefore, the maximum delay time can be 6.25 µs if the internal clock has its minimum frequency of 800 kHz.

If the device is synchronized to an external clock, the power save mode is disabled, and the devices stay in forced PWM mode.

Connecting the SYNC pin to the GND pin enables the power save mode. The converter operates in the PWM mode at moderate-to-heavy loads, and in the PFM mode during light loads, which maintains high efficiency over a wide load current range.

9.3.7 Thermal Shutdown

The junction temperature (T_J) of the device is monitored by an internal temperature sensor. If T_J exceeds 145°C typical, the device goes into thermal shutdown. Both the high-side and low-side power FETs are turned off and PG goes high impedance. When T_J decreases by typically 10°C, the converter resumes normal operation.

9.4 Device Functional Modes

9.4.1 Soft Start

The TPS6211x has an internal soft-start circuit that limits the inrush current during start-up. This prevents possible voltage drops of the input voltage when a battery or a high-impedance power source is connected to the input of the TPS6211x devices.

The soft start is implemented as a digital circuit increasing the switch current in steps of 300 mA, 600 mA, and 1200 mA for 250 µs each. Then, the switch current limit is set to 2.4 A typical. Therefore, the start-up time depends on the output capacitor and load current. Typical start-up time with a 22-µF output capacitor and 800-mA load current is 1 ms.

The TPS6211x devices can start into a prebiased output. During monotonic prebiased start-up, the N-channel MOSFET is not allowed to turn on until the internal ramp of the device sets an output voltage greater than the prebias voltage.

9.4.2 Constant-Frequency Mode of Operation (Sync = High)

In constant-frequency mode, the output voltage is regulated by varying the duty cycle of the PWM signal in the range of 100% to 10%. Connecting the SYNC pin to a voltage greater than 1.5 V forces the converter to operate permanently in the PWM mode even at light- or no-load currents. The advantage is that the converter operates with a fixed switching frequency that allows simple filtering of the switching frequency for noise-sensitive applications. In this mode, the efficiency is lower compared to the power-save mode during light loads. The N-MOSFET of the devices stays on even when the current into the output drops to zero. This prevents the device from going into discontinuous mode, and the device transfers unused energy back to the input. Therefore, there is no ringing at the output, which usually occurs in discontinuous mode. The duty cycle range in constant-frequency mode is 100% to 10%.

Copyright © 2005–2015, Texas Instruments Incorporated

Device Functional Modes (continued)

9.4.3 Power Save Mode of Operation (Sync = Low)

As the load current decreases, the converter enters the power-save mode of operation. During power-save mode, the converter operates with reduced switching frequency in pulse-frequency modulation (PFM), and with a minimum quiescent current to maintain high efficiency. Whenever the average output current goes below the skip threshold, the converter enters the power-save mode. The average current depends on the input voltage. It is about 200 mA at low input voltages and up to 400 mA with maximum input voltage. The average output current must be less than the threshold for at least 32 clock cycles to enter the power-save mode. During the power-save mode, the output voltage is monitored with a comparator, and the output voltage is regulated to a typical value between the nominal output voltage and 0.8% above the nominal output voltage. When the output voltage falls below the nominal output voltage, the P-channel switch turns on. The P-channel switch is turned off as the peak switch current is reached. The N-channel rectifier is turned on, and the inductor current ramps down. As the inductor current approaches zero, the N-channel rectifier is turned off and the switch is turned on starting the next pulse. When the output voltage cannot be reached with a single pulse, the device continues to switch with its normal operating frequency until the comparator detects the output voltage to be 0.8% above the nominal output voltage. This control method reduces the quiescent current to 20 µA (typical), and reduces the switching frequency to a minimum that achieves the highest converter efficiency. Figure 5 shows the typical power save mode operation.

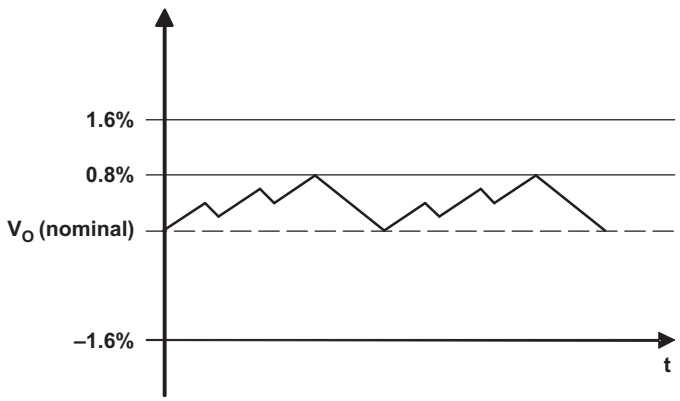

Figure 5. Power Save Mode Output-Voltage Thresholds

Use Equation 1 the typical PFM (SKIP) current threshold for the TPS6211x devices.

$$I_{SKIP} \approx \frac{V_I}{25\ \Omega} \tag{1}$$

Equation 1 is valid for input voltages up to 7 V. For higher voltages, the skip current threshold is not increased further. The converter enters the fixed-frequency PWM mode as soon as the output voltage falls below V_O – 1.6% (nominal).

9.4.4 100% Duty-Cycle, Low-Dropout Operation

The TPS6211x devices offer the lowest possible input-to-output voltage difference while still maintaining operation with the use of the 100% duty-cycle mode. In this mode, the P-channel switch is constantly turned on. This is particularly useful in battery-powered applications to achieve the longest operation time, taking full advantage of the whole battery voltage range. The minimum input voltage to maintain regulation depends on the load current and output voltage, and is calculated using Equation 2.

$$V_I(\min) = V_O(\max) + I_O(\max) \times \left(R_{DS(ON)}(\max) + R_L\right)$$

I_O (max) = Maximum output current plus inductor ripple current

$R_{DS(ON)}$(max) = Maximum P-Channel switch resistance

R_L = DC resistance of the inductor

V_O(max) = Nominal output voltage plus maximum output voltage tolerance (2)

Device Functional Modes (continued)

9.4.5 No-Load Operation

When the converter operates in the forced PWM mode and there is no load connected to the output, the converter regulates the output voltage by allowing the inductor current to reverse for a short time.

Copyright © 2005–2015, Texas Instruments Incorporated

10 Application and Implementation

NOTE

Information in the following applications sections is not part of the TI component specification, and TI does not warrant its accuracy or completeness. TI's customers are responsible for determining suitability of components for their purposes. Customers should validate and test their design implementation to confirm system functionality.

10.1 Application Information

The TPS6211x devices are a family of low-noise synchronous step-down DC-DC converters that are ideally suited for systems powered from a 2- to 4-cell Li-ion battery or from a 12-V or 15-V rail.

10.2 Typical Applications

10.2.1 Standard Connection for Adjustable Version

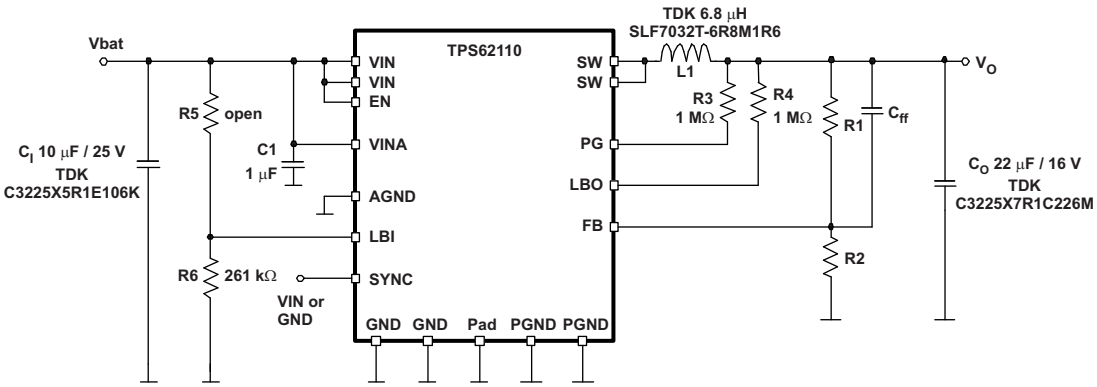

For an output voltage lower than 2.5 V, TI recommends an output capacitor of 33 µF or greater to improve load transient performance.

Figure 6. Standard Connection for Adjustable Version

10.2.1.1 Design Requirements

The design guidelines provide a component selection to operate the device within the *Recommended Operating Conditions*.

Table 1. Bill of Materials for the Adjustable Version

REFERENCE	PART NUMBER	VALUE	MANUFACTURER
Ci	C3225X5R1E106K	10 µF	TDK
Co	C3225X7R1C226M	22 µF	TDK
L1	SLF7032T-6R8M1R6	6.8 µH	TDK
C1	TMK212B7105KG-T	1 µF	Taiyo Yuden
IC1	TPS62110	-	Texas Instruments
R1	generic metal film resistor; tolerance 1%	220 kΩ (depending on desired output voltage)	—
R2	generic metal film resistor; tolerance 1%	390 kΩ (depending on desired output voltage)	—
R3, R4	generic metal film resistor; tolerance 1%	1 MΩ	—
R5	generic metal film resistor; tolerance 1%	open	—
R6	generic metal film resistor; tolerance 1%	261 kΩ	—

Typical Applications (continued)

Table 1. Bill of Materials for the Adjustable Version (continued)

REFERENCE	PART NUMBER	VALUE	MANUFACTURER
C(ff)	generic ceramic capacitor; COG	10 pF (depending on output voltage)	—

10.2.1.2 Detailed Design Procedure

The graphs were generated using the EVM with the setup according to Figure 6, unless otherwise noted. Graphs for an output voltage of 1.5 V and 1.8 V were generated using the TPS62110 device with the output voltage dividers adjusted according Table 2.

$$V_O = V_{FB} \times \frac{R1 + R2}{R2} \qquad R1 = R2 \times \left(\frac{V_O}{V_{FB}}\right) - R2$$

$$V_{FB} = 1.153\ V \tag{3}$$

Table 2. Recommended Resistors

OUTPUT VOLTAGE	R1	R2	NOMINAL VOLTAGE	TYPICAL C_{ff}
9 V	680 kΩ	100 kΩ	8.993 V	22 pF
5 V	510 kΩ	150 kΩ	5.073 V	10 pF
3.3 V	560 kΩ	300 kΩ	3.305 V	10 pF
2.5 V	390 kΩ	330 kΩ	2.515 V	10 pF
1.8 V	220 kΩ	390 kΩ	1.803 V	10 pF
1.5 V	100 kΩ	330 kΩ	1.502 V	10 pF

10.2.1.2.1 External Component Selection

The control loop of the TPS6211x family of devices requires a certain value for the output inductor and the output capacitor for stable operation. As long as the nominal value of L × C ≥ 6.2 µH × 22 µF, the control loop has enough phase margin and the device is stable. Reducing the inductor value without increasing the output capacitor (or vice versa) may cause stability problems. There are applications where it may be useful to increase the value of the output capacitor, and so on, for a low-transient output-voltage change. From a stability point of view, the inductor value could be decreased to keep the L × C product constant. However, there are drawbacks if the inductor value is decreased. A low inductor value causes a high inductor ripple current, and therefore reduces the maximum DC output current. Table 3 gives the advantages and disadvantages when designing the inductor and output capacitor.

Table 3. Advantages and Disadvantages When Designing the Inductor and Output Capacitor

	INFLUENCE ON STABILITY	ADVANTAGE	DISADVANTAGE
Increase C_{out} (>22 µF)	Uncritical	Less output voltage ripple	None
		Less output voltage overshoot / undershoot during load transient	
Decrease C_{out} (<22 µF)	Critical Increase inductor value >6.8 µH also	None	Higher-output voltage ripple
			High-output voltage overshoot / undershoot during load transient
			Less gain and phase margin
Increase L (>6.8 µH)	Uncritical	Less inductor current ripple	More energy stored in the inductor → higher voltage overshoot during load transient
		Higher DC output current possible if operated close to the current limit	Smaller current rise → higher voltage undershoot during load transient → do not decrease the value of C_{out} due to these effects

Copyright © 2005–2015, Texas Instruments Incorporated

Table 3. Advantages and Disadvantages When Designing the Inductor and Output Capacitor (continued)

	INFLUENCE ON STABILITY	ADVANTAGE	DISADVANTAGE
Decrease L (<6.8 µH)	Critical Increase output capacitor value > 22 µF also	Small voltage overshoot and undershoot during load transient	High inductor current ripple especially at high input voltage and low output voltage

10.2.1.2.2 Inductor Selection

As shown in Table 3, the inductor value can be increased to greater values. For good performance, the peak-to-peak inductor-current ripple should be less than 30% of the maximum DC output current. Especially at input voltages greater than 12 V, it makes sense to increase the inductor value to keep the inductor-current ripple low. In such applications, the inductor value can be increased to 10 µH or 22 µH. Values greater than 22 µH should be avoided to keep the voltage overshoot during load transient in an acceptable range.

After choosing the inductor value, two additional inductor parameters should be considered:

- Current rating of the inductor
- DC resistance

The DC resistance of the inductance directly influences the efficiency of the converter. Therefore, an inductor with lowest DC resistance should be selected for highest efficiency. To avoid saturation of the inductor, the inductor should be rated at least for the maximum output current plus the inductor ripple current which is calculated using Equation 4.

$$\Delta I_L = V_O \times \frac{1 - \frac{V_O}{V_I}}{L \times f} \qquad I_L\,max = I_O\,max + \frac{\Delta I_L}{2}$$

where

- f = Switching frequency (1000 kHz typical)
- L = Inductor value
- ΔI_L = Peak-to-peak inductor ripple current
- I_L(max) = Maximum inductor current (4)

The highest inductor current occurs at maximum V_I. A more conservative approach is to select the inductor current rating just for the maximum switch current of the TPS6211x, which is 2.4 A (typically). See Table 4 for recommended inductors.

Table 4. List of Inductors

MANUFACTURER	PART NO.	INDUCTANCE	DC RESISTANCE	SATURATION CURRENT
Coilcraft	MSS6132-682	6.8 µH	65 mΩ (maximum)	1.5 A
	HA3808-AL	6.8 µH	99 mΩ (typical)	4.4 A
Epcos	B82462G4682M	6.8 µH	50 mΩ (maximum)	1.5 A
Sumida	CDRH5D28-6R2	6.2 µH	33 mΩ (typical)	1.8 A
TDK	SLF6028T-6R8M1R5	6.8 µH	35 mΩ (typical)	1.5 A
	SLF7032T-6R8M1R6	6.8 µH	41 mΩ (typical)	1.6 A
Wurth	7447789006	6.8 µH	44 mΩ (typical)	2.75 A
	7447779006	6.8 µH	33 mΩ (typical)	3.3 A
	744053006	6.2 µH	45 mΩ (typical)	1.8 A

10.2.1.2.3 Output Capacitor Selection

A 22-µF (typical) output capacitor is needed with a 6.8-µH inductor. For an output voltage greater than 5 V, a 33-µF (minimum) output capacitor is required for stability. For best performance, a low-ESR ceramic output capacitor is needed.

The RMS ripple current is calculated using Equation 5.

$$I_{RMS}(C_O) = V_O \times \frac{1 - \frac{V_O}{V_I}}{L \times f} \times \frac{1}{2 \times \sqrt{3}} \quad (5)$$

The overall output ripple voltage is the sum of the voltage spike caused by the output capacitor ESR plus the voltage ripple caused by charging and discharging the output capacitor:

$$\Delta V_O = V_O \times \frac{1 - \frac{V_O}{V_I}}{L \times f} \times \left(\frac{1}{8 \times C_O \times f} + R_{ESR} \right)$$

where

- the highest output voltage ripple occurs at the highest input voltage V_I. (6)

10.2.1.2.4 Input Capacitor Selection

The nature of the buck converter is a pulsating input current; therefore, a low ESR input capacitor is required for best input voltage filtering and for minimizing the interference with other circuits caused by high input voltage spikes. The input capacitor should have a minimum value of 10 µF and can be increased without any limit for better input voltage filtering. The input capacitor should be rated for the maximum input ripple current and is calculated using Equation 7.

$$I_{RMS} = I_O \max \times \sqrt{\frac{V_O}{V_I} \times \left(1 - \frac{V_O}{V_I}\right)} \quad (7)$$

The worst-case RMS ripple current occurs at D = 0.5 and is calculated as: $I_{RMS} = I_O/2$. Ceramic capacitors show a good performance because of their low ESR value, and they are less sensitive against voltage transients compared to tantalum capacitors. Place the input capacitor as close as possible to the VIN and PGND pins of the IC for best performance.

An additional 1-µF input capacitor is required from VINA to AGND. VIN and VINA must be connected to the same source. TI does not recommend an RC filter from VIN to VINA.

10.2.1.2.5 Feedforward Capacitor Selection

The feedforward capacitor (C_{ff}) is needed to compensate for parasitic capacitance from the feedback pin to GND. Typically, a value of 4.7 pF to 22 pF is needed for an output voltage divider with a equivalent resistance (R1 in parallel with R2) in the 150-kΩ range. The value can be chosen based on best transient performance and lowest output voltage ripple in PFM mode.

10.2.1.2.6 Recommended Capacitors

TI recommends using only X5R or X7R ceramic capacitors as input and output capacitors. Ceramic capacitors show a DC-bias effect. This effect reduces the effective capacitance when a DC-bias voltage is applied across a ceramic capacitor, as on the output and input capacitor of a DC-DC converter. The effect may lead to a significant capacitance drop, especially for high input and output voltages and small capacitor packages. See the manufacturer's data sheet about the performance with a DC bias voltage applied. It may be necessary to choose a higher voltage rating or nominal capacitance value to get the required value at the operating point. The capacitors listed in Table 5 have been tested with the TPS6211x devices with good performance.

Table 5. List of Capacitors

MANUFACTURER	PART NUMBER	SIZE	VOLTAGE	CAPACITANCE	TYPE
Taiyo Yuden	TMK316BJ106KL	1206	25 V	10 µF	Ceramic
	EMK325BJ226KM	1210	16 V	22 µF	
TDK	C3225X5R1E106M	1210	25 V	10 µF	Ceramic
	C3225X7R1C226M		16 V	22 µF	
	C3216X5R1E106MT	1206	25 V	10 µF	

Copyright © 2005–2015, Texas Instruments Incorporated

10.2.1.3 Application Curves

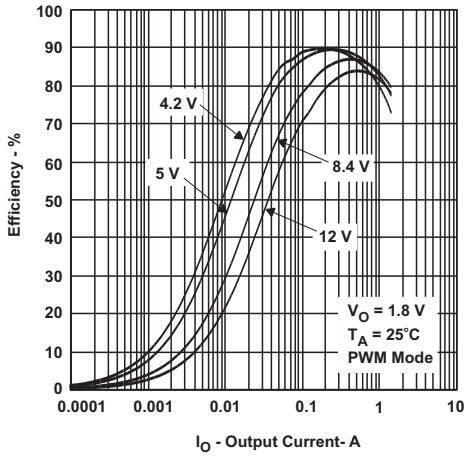

Figure 7. TPS62110 Efficiency vs Output Current

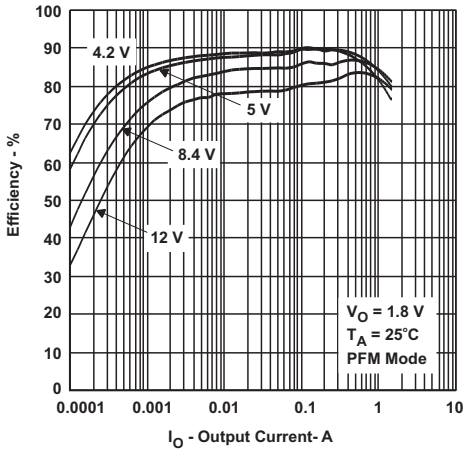

Figure 8. TPS62110 Efficiency vs Output Current

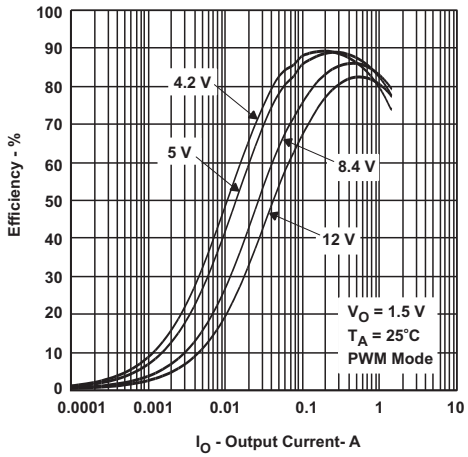

Figure 9. TPS62110 Efficiency vs Output Current

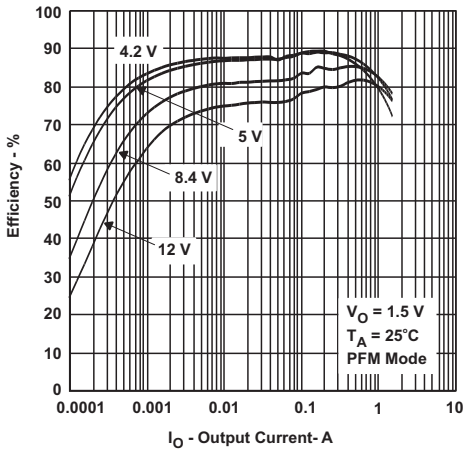

Figure 10. TPS62110 Efficiency vs Output Current

10.2.2 Standard Connection for Fixed-Voltage Version

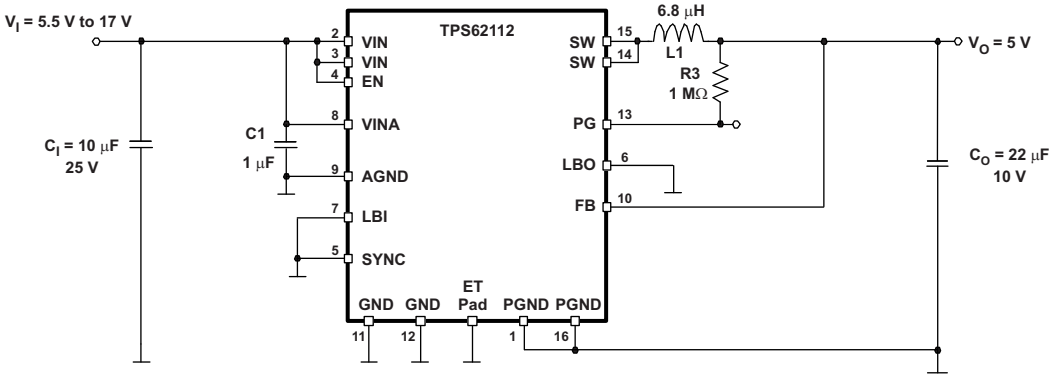

Figure 11. Standard Connection for Fixed-Voltage Version

10.2.2.1 Design Requirements

The design guidelines provide a component selection to operate the device within the *Recommended Operating Conditions*.

Table 6. Bill of Materials for the Fixed Voltage Versions

REFERENCE	PART NUMBER	VALUE	MANUFACTURER
Ci	C3225X5R1E106K	10 µF	TDK
Co	C3225X7R1C226M	22 µF	TDK
L1	SLF7032T-6R8M1R6	6.8 µH	TDK
C1	TMK212B7105KG-T	1 µF	Taiyo Yuden
IC1	TPS62112	—	Texas Instruments
R3	generic metal film resistor; tolerance 1%	1 MΩ	—

10.2.2.2 Detailed Design Procedure

The graphs were generated using the EVM with the setup according to Figure 6, unless otherwise noted. Graphs for an output voltage of 5 V and 3.3 V were generated using the TPS62111 and TPS62112 devices with R1 = 0 Ω and R2 = open.

10.2.2.3 Application Curves

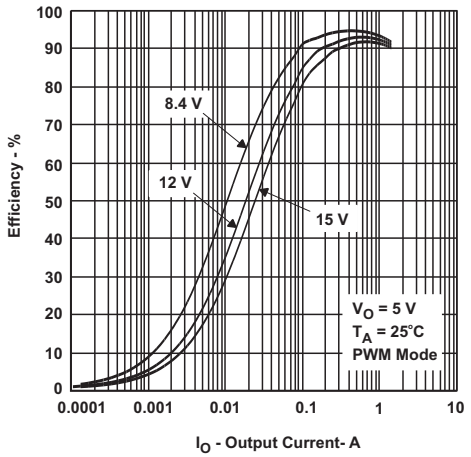

Figure 12. TPS62112 Efficiency vs Output Current

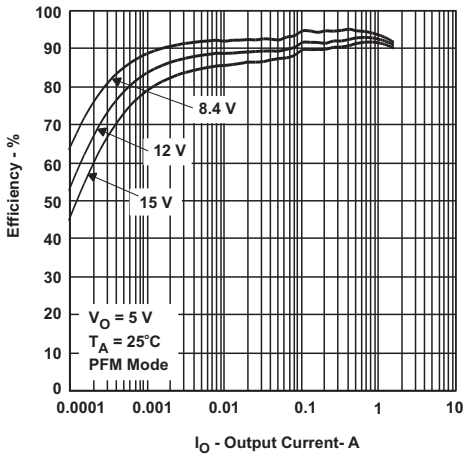

Figure 13. TPS62112 Efficiency vs Output Current

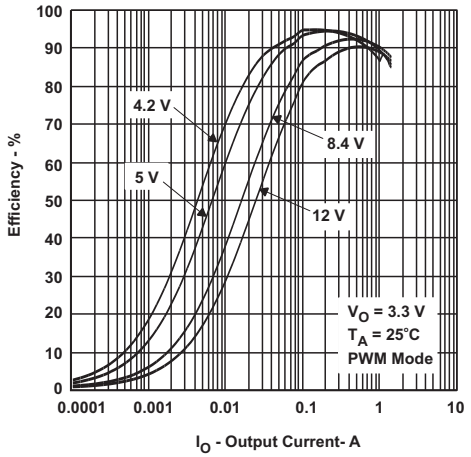

Figure 14. TPS62111 Efficiency vs Output Current

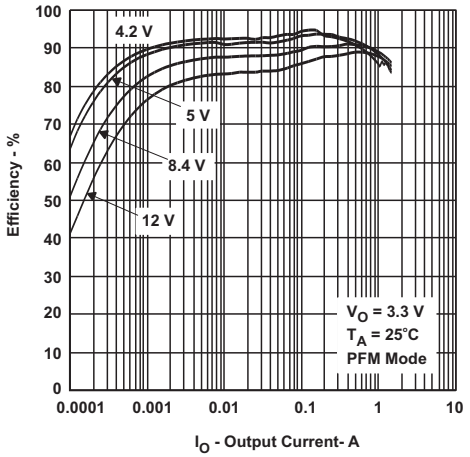

Figure 15. TPS62111 Efficiency vs Output Current

Copyright © 2005–2015, Texas Instruments Incorporated

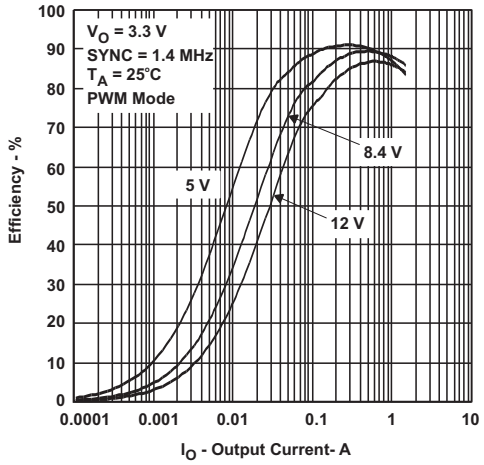

Figure 16. TPS62111 Efficiency vs Output Current

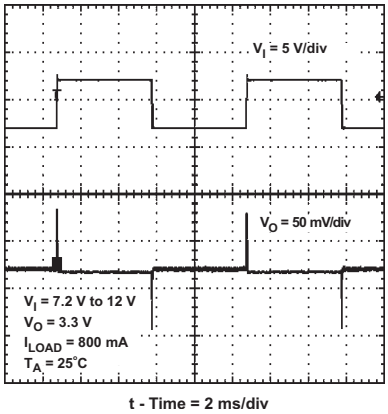

Figure 17. TPS62111 Line Transient

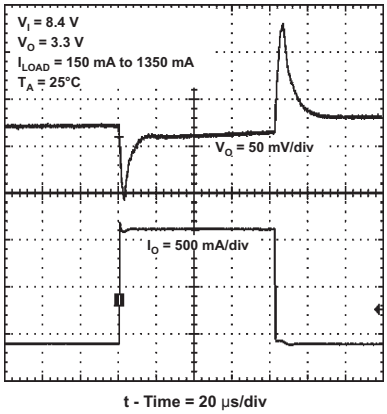

Figure 18. TPS62111 Load Transient

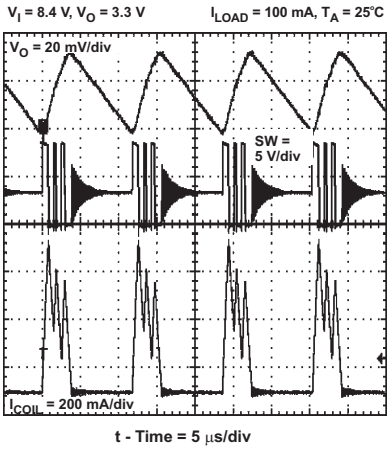

Figure 19. TPS62111 Output Ripple

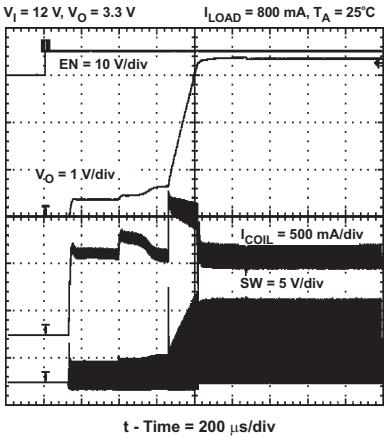

Figure 20. TPS62111 Start-up Timing

10.3 System Examples

The TPS62110 device can be used within an adjustable output voltage range from 1.2 V to 16 V. Figure 21 shows and application example with 9-V output.

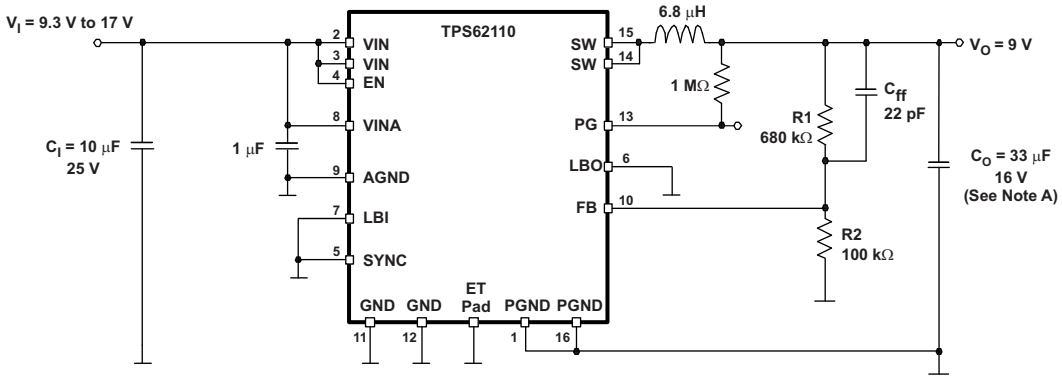

A. For an output voltage greater than 5 V, an output capacitor of 33 µF minimum is required for stability.

Figure 21. Application With 9-V Output

Copyright © 2005–2015, Texas Instruments Incorporated

11 Power Supply Recommendations

The TPS6211x family of devices has no special requirements for its input power supply. The output current of the input power supply must be rated according to the supply voltage, output voltage, and output current of the TPS6211x devices.

12 Layout

12.1 Layout Guidelines

A proper layout is critical for the operation of a switched-mode power supply (SMPS), even more at high switching frequencies. Therefore, the PCB layout of the TPS6211x devices demands careful attention to ensure operation and to get the performance specified. A poor layout can lead to issues like poor regulation (both line and load), stability and accuracy weaknesses, increased EMI radiation, and noise sensitivity.

Provide low inductive and resistive paths for loops with high di/dt. Therefore, paths conducting the switched load current should be as short and wide as possible. The input and output capacitance should be placed as close as possible to the IC pins and parallel wiring over long distances as well as narrow traces should be avoided. Provide low capacitive paths (with respect to all other nodes) for wires with high dv/dt. Therefore, keep the SW node small. Loops which conduct an alternating current should outline an area as small as possible, as this area is proportional to the energy radiated.

Sensitive nodes like FB and LBI need to be connected with short wires and not nearby high dv/dt signals (that is, SW). The FB resistors, R1 and R2, and LBI resistors, R5 and R6, should be kept close to the IC and connect directly to those pins and AGND. The 1-µF capacitor on VINA should connect directly from VINA to AGND.

All grounds (GND, AGND, and PGND) are directly connected to the exposed thermal pad. The exposed thermal pad must be soldered to the circuit board for mechanical reliability and to achieve appropriate power dissipation.

See Figure 22 for the recommended layout of the TPS6211x.

12.2 Layout Example

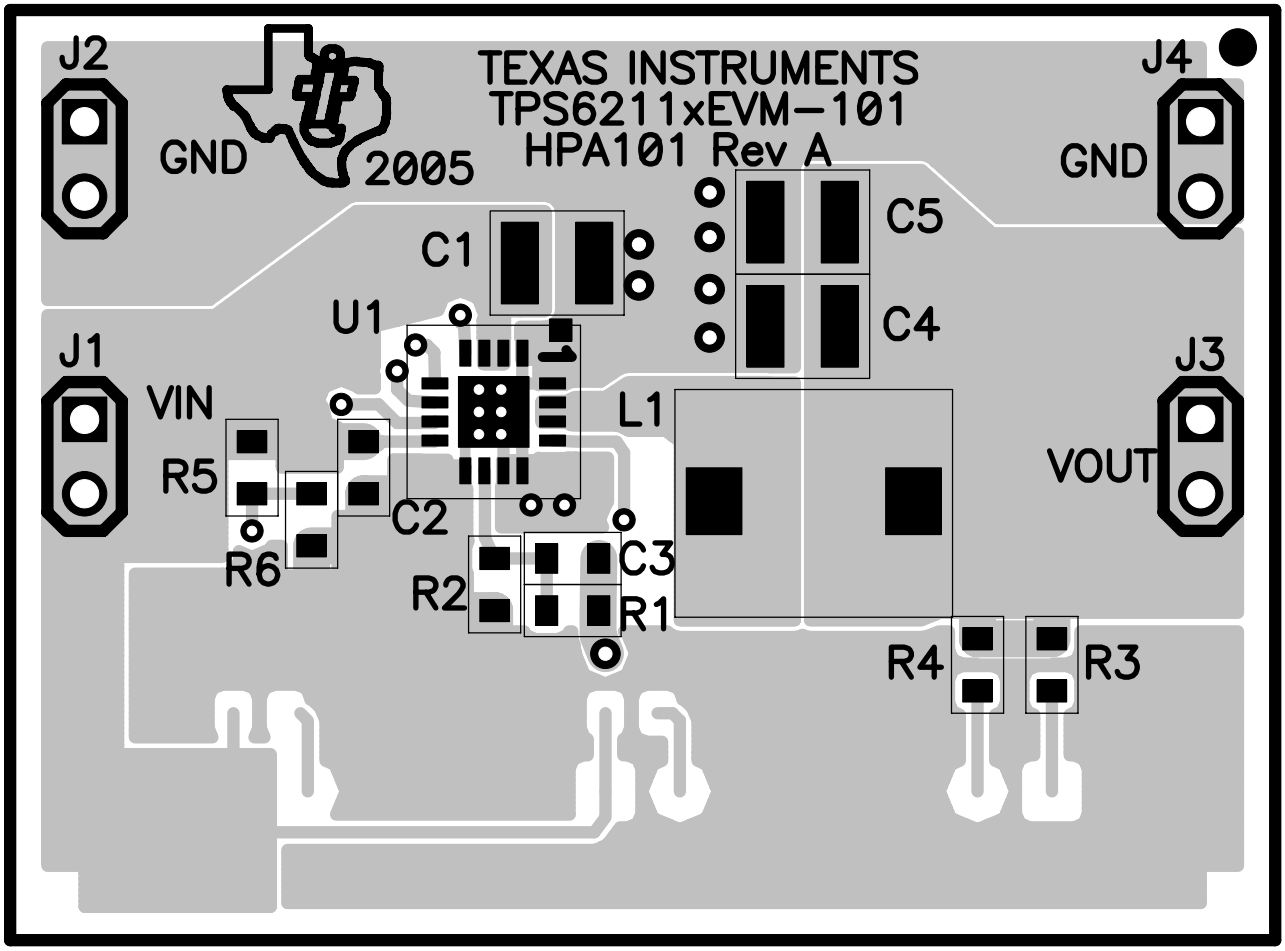

Figure 22. Recommended Layout

Copyright © 2005–2015, Texas Instruments Incorporated

13 Device and Documentation Support

13.1 Device Support

TPS6211x Driving EN and SYNC Pins, SLVA295

Adding Hysteresis to Low-Battery Input on the TPS62113, SLVA373

13.1.1 Third-Party Products Disclaimer

TI'S PUBLICATION OF INFORMATION REGARDING THIRD-PARTY PRODUCTS OR SERVICES DOES NOT CONSTITUTE AN ENDORSEMENT REGARDING THE SUITABILITY OF SUCH PRODUCTS OR SERVICES OR A WARRANTY, REPRESENTATION OR ENDORSEMENT OF SUCH PRODUCTS OR SERVICES, EITHER ALONE OR IN COMBINATION WITH ANY TI PRODUCT OR SERVICE.

13.2 Related Links

Table 7 lists quick access links. Categories include technical documents, support and community resources, tools and software, and quick access to sample or buy.

Table 7. Related Links

PARTS	PRODUCT FOLDER	SAMPLE & BUY	TECHNICAL DOCUMENTS	TOOLS & SOFTWARE	SUPPORT & COMMUNITY
TPS62110	Click here	Click here	Click here	Click here	Click here
TPS62111	Click here	Click here	Click here	Click here	Click here
TPS62112	Click here	Click here	Click here	Click here	Click here
TPS62113	Click here	Click here	Click here	Click here	Click here

13.3 Community Resources

The following links connect to TI community resources. Linked contents are provided "AS IS" by the respective contributors. They do not constitute TI specifications and do not necessarily reflect TI's views; see TI's Terms of Use.

TI E2E™ Online Community ***TI's Engineer-to-Engineer (E2E) Community.*** Created to foster collaboration among engineers. At e2e.ti.com, you can ask questions, share knowledge, explore ideas and help solve problems with fellow engineers.

Design Support ***TI's Design Support*** Quickly find helpful E2E forums along with design support tools and contact information for technical support.

13.4 Trademarks

E2E is a trademark of Texas Instruments.
All other trademarks are the property of their respective owners.

13.5 Electrostatic Discharge Caution

These devices have limited built-in ESD protection. The leads should be shorted together or the device placed in conductive foam during storage or handling to prevent electrostatic damage to the MOS gates.

13.6 Glossary

SLYZ022 — *TI Glossary*.

This glossary lists and explains terms, acronyms, and definitions.

14 Mechanical, Packaging, and Orderable Information

The following pages include mechanical, packaging, and orderable information. This information is the most current data available for the designated devices. This data is subject to change without notice and revision of this document. For browser-based versions of this data sheet, refer to the left-hand navigation.

PACKAGING INFORMATION

Orderable Device	Status (1)	Package Type	Package Drawing	Pins	Package Qty	Eco Plan (2)	Lead finish/ Ball material (6)	MSL Peak Temp (3)	Op Temp (°C)	Device Marking (4/5)	Samples
TPS62110RSAR	ACTIVE	QFN	RSA	16	3000	RoHS & Green	NIPDAU	Level-2-260C-1 YEAR	-40 to 85	TPS 62110	Samples
TPS62110RSARG4	ACTIVE	QFN	RSA	16	3000	RoHS & Green	NIPDAU	Level-2-260C-1 YEAR	-40 to 85	TPS 62110	Samples
TPS62110RSAT	ACTIVE	QFN	RSA	16	250	RoHS & Green	NIPDAU	Level-2-260C-1 YEAR	-40 to 85	TPS 62110	Samples
TPS62110RSATG4	ACTIVE	QFN	RSA	16	250	RoHS & Green	NIPDAU	Level-2-260C-1 YEAR	-40 to 85	TPS 62110	Samples
TPS62111RSAR	ACTIVE	QFN	RSA	16	3000	RoHS & Green	NIPDAU	Level-2-260C-1 YEAR	-40 to 85	TPS 62111	Samples
TPS62111RSARG4	ACTIVE	QFN	RSA	16	3000	RoHS & Green	NIPDAU	Level-2-260C-1 YEAR	-40 to 85	TPS 62111	Samples
TPS62111RSAT	ACTIVE	QFN	RSA	16	250	RoHS & Green	NIPDAU	Level-2-260C-1 YEAR	-40 to 85	TPS 62111	Samples
TPS62111RSATG4	ACTIVE	QFN	RSA	16	250	RoHS & Green	NIPDAU	Level-2-260C-1 YEAR	-40 to 85	TPS 62111	Samples
TPS62112RSAR	ACTIVE	QFN	RSA	16	3000	RoHS & Green	NIPDAU	Level-2-260C-1 YEAR	-40 to 85	TPS 62112	Samples
TPS62112RSARG4	ACTIVE	QFN	RSA	16	3000	RoHS & Green	NIPDAU	Level-2-260C-1 YEAR	-40 to 85	TPS 62112	Samples
TPS62112RSAT	ACTIVE	QFN	RSA	16	250	RoHS & Green	NIPDAU	Level-2-260C-1 YEAR	-40 to 85	TPS 62112	Samples
TPS62113RSAR	ACTIVE	QFN	RSA	16	3000	RoHS & Green	NIPDAU	Level-2-260C-1 YEAR	-40 to 85	TPS 62113	Samples
TPS62113RSAT	ACTIVE	QFN	RSA	16	250	RoHS & Green	NIPDAU	Level-2-260C-1 YEAR	-40 to 85	TPS 62113	Samples

(1) The marketing status values are defined as follows:
ACTIVE: Product device recommended for new designs.
LIFEBUY: TI has announced that the device will be discontinued, and a lifetime-buy period is in effect.
NRND: Not recommended for new designs. Device is in production to support existing customers, but TI does not recommend using this part in a new design.
PREVIEW: Device has been announced but is not in production. Samples may or may not be available.
OBSOLETE: TI has discontinued the production of the device.

(2) **RoHS:** TI defines "RoHS" to mean semiconductor products that are compliant with the current EU RoHS requirements for all 10 RoHS substances, including the requirement that RoHS substance do not exceed 0.1% by weight in homogeneous materials. Where designed to be soldered at high temperatures, "RoHS" products are suitable for use in specified lead-free processes. TI may reference these types of products as "Pb-Free".
RoHS Exempt: TI defines "RoHS Exempt" to mean products that contain lead but are compliant with EU RoHS pursuant to a specific EU RoHS exemption.
Green: TI defines "Green" to mean the content of Chlorine (Cl) and Bromine (Br) based flame retardants meet JS709B low halogen requirements of <=1000ppm threshold. Antimony trioxide based flame retardants must also meet the <=1000ppm threshold requirement.

(3) MSL, Peak Temp. - The Moisture Sensitivity Level rating according to the JEDEC industry standard classifications, and peak solder temperature.

(4) There may be additional marking, which relates to the logo, the lot trace code information, or the environmental category on the device.

(5) Multiple Device Markings will be inside parentheses. Only one Device Marking contained in parentheses and separated by a "~" will appear on a device. If a line is indented then it is a continuation of the previous line and the two combined represent the entire Device Marking for that device.

(6) Lead finish/Ball material - Orderable Devices may have multiple material finish options. Finish options are separated by a vertical ruled line. Lead finish/Ball material values may wrap to two lines if the finish value exceeds the maximum column width.

Important Information and Disclaimer: The information provided on this page represents TI's knowledge and belief as of the date that it is provided. TI bases its knowledge and belief on information provided by third parties, and makes no representation or warranty as to the accuracy of such information. Efforts are underway to better integrate information from third parties. TI has taken and continues to take reasonable steps to provide representative and accurate information but may not have conducted destructive testing or chemical analysis on incoming materials and chemicals. TI and TI suppliers consider certain information to be proprietary, and thus CAS numbers and other limited information may not be available for release.

In no event shall TI's liability arising out of such information exceed the total purchase price of the TI part(s) at issue in this document sold by TI to Customer on an annual basis.

OTHER QUALIFIED VERSIONS OF TPS62110, TPS62111, TPS62112 :

- Automotive: TPS62110-Q1
- Enhanced Product: TPS62110-EP, TPS62111-EP, TPS62112-EP

NOTE: Qualified Version Definitions:

- Automotive - Q100 devices qualified for high-reliability automotive applications targeting zero defects
- Enhanced Product - Supports Defense, Aerospace and Medical Applications

TAPE AND REEL INFORMATION

REEL DIMENSIONS

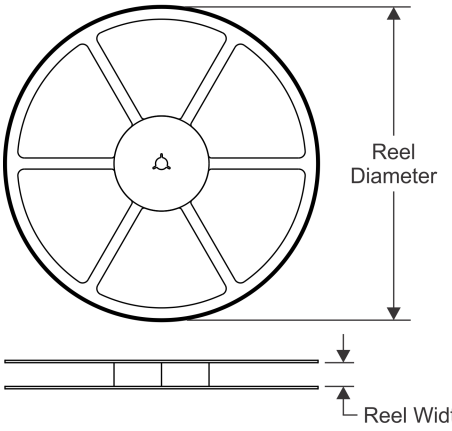

TAPE DIMENSIONS

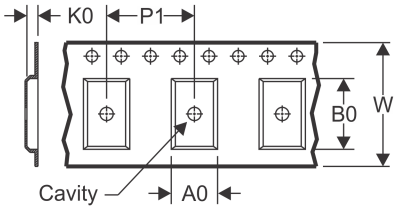

A0	Dimension designed to accommodate the component width
B0	Dimension designed to accommodate the component length
K0	Dimension designed to accommodate the component thickness
W	Overall width of the carrier tape
P1	Pitch between successive cavity centers

QUADRANT ASSIGNMENTS FOR PIN 1 ORIENTATION IN TAPE

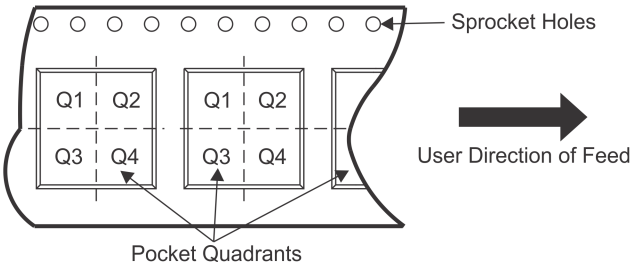

*All dimensions are nominal

Device	Package Type	Package Drawing	Pins	SPQ	Reel Diameter (mm)	Reel Width W1 (mm)	A0 (mm)	B0 (mm)	K0 (mm)	P1 (mm)	W (mm)	Pin1 Quadrant
TPS62110RSAR	QFN	RSA	16	3000	330.0	12.4	4.25	4.25	1.15	8.0	12.0	Q2
TPS62110RSAT	QFN	RSA	16	250	180.0	12.4	4.25	4.25	1.15	8.0	12.0	Q2
TPS62111RSAR	QFN	RSA	16	3000	330.0	12.4	4.25	4.25	1.15	8.0	12.0	Q2
TPS62111RSAT	QFN	RSA	16	250	180.0	12.4	4.25	4.25	1.15	8.0	12.0	Q2
TPS62112RSAR	QFN	RSA	16	3000	330.0	12.4	4.25	4.25	1.15	8.0	12.0	Q2
TPS62112RSAT	QFN	RSA	16	250	180.0	12.4	4.25	4.25	1.15	8.0	12.0	Q2
TPS62113RSAR	QFN	RSA	16	3000	330.0	12.4	4.25	4.25	1.15	8.0	12.0	Q2
TPS62113RSAT	QFN	RSA	16	250	180.0	12.4	4.25	4.25	1.15	8.0	12.0	Q2

TAPE AND REEL BOX DIMENSIONS

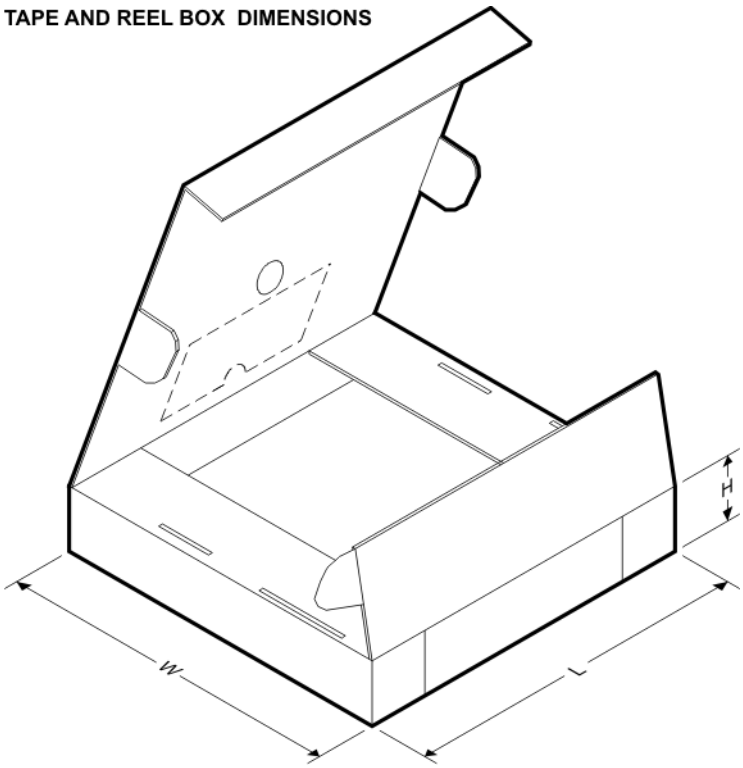

*All dimensions are nominal

Device	Package Type	Package Drawing	Pins	SPQ	Length (mm)	Width (mm)	Height (mm)
TPS62110RSAR	QFN	RSA	16	3000	367.0	367.0	35.0
TPS62110RSAT	QFN	RSA	16	250	210.0	185.0	35.0
TPS62111RSAR	QFN	RSA	16	3000	367.0	367.0	35.0
TPS62111RSAT	QFN	RSA	16	250	210.0	185.0	35.0
TPS62112RSAR	QFN	RSA	16	3000	367.0	367.0	35.0
TPS62112RSAT	QFN	RSA	16	250	210.0	185.0	35.0
TPS62113RSAR	QFN	RSA	16	3000	367.0	367.0	35.0
TPS62113RSAT	QFN	RSA	16	250	210.0	185.0	35.0

RSA (S-PVQFN-N16) PLASTIC QUAD FLATPACK NO-LEAD

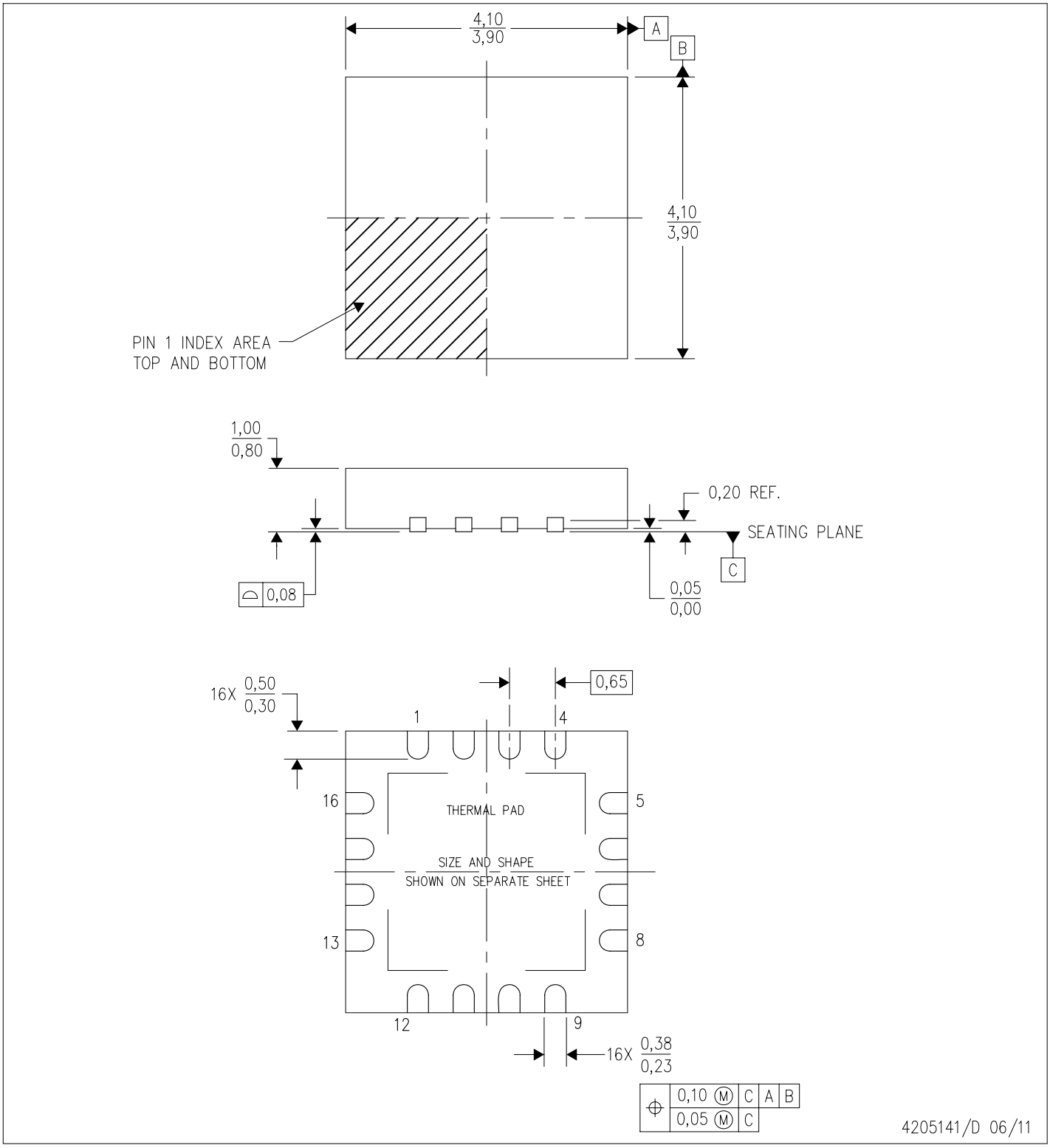

NOTES:
A. All linear dimensions are in millimeters. Dimensioning and tolerancing per ASME Y14.5M-1994.
B. This drawing is subject to change without notice.
C. Quad Flatpack, No-leads (QFN) package configuration.
D. The package thermal pad must be soldered to the board for thermal and mechanical performance.
E. See the additional figure in the Product Data Sheet for details regarding the exposed thermal pad features and dimensions.
F. Falls within JEDEC MO-220.

RSA (S–PVQFN–N16) PLASTIC QUAD FLATPACK NO–LEAD

THERMAL INFORMATION

This package incorporates an exposed thermal pad that is designed to be attached directly to an external heatsink. The thermal pad must be soldered directly to the printed circuit board (PCB). After soldering, the PCB can be used as a heatsink. In addition, through the use of thermal vias, the thermal pad can be attached directly to the appropriate copper plane shown in the electrical schematic for the device, or alternatively, can be attached to a special heatsink structure designed into the PCB. This design optimizes the heat transfer from the integrated circuit (IC).

For information on the Quad Flatpack No–Lead (QFN) package and its advantages, refer to Application Report, QFN/SON PCB Attachment, Texas Instruments Literature No. SLUA271. This document is available at www.ti.com.

The exposed thermal pad dimensions for this package are shown in the following illustration.

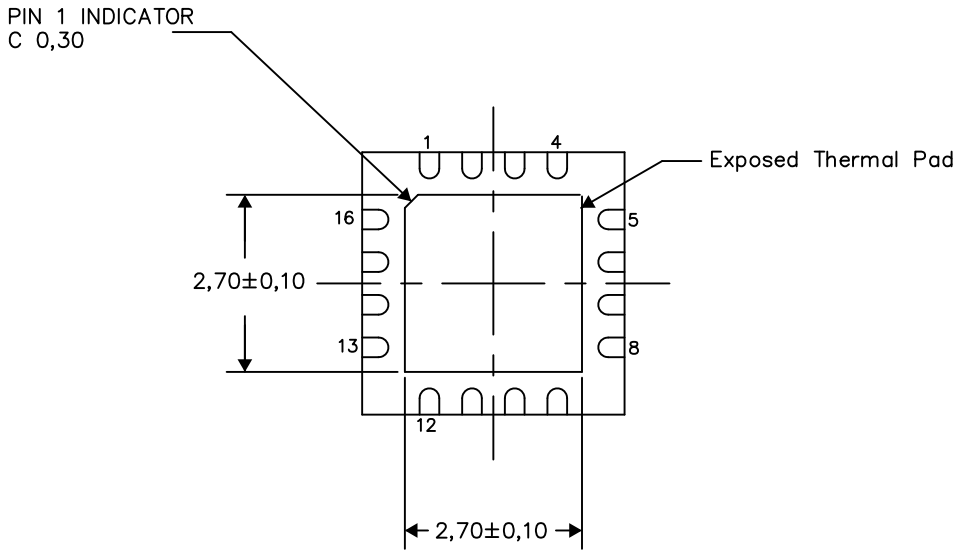

Bottom View

Exposed Thermal Pad Dimensions

4206364–2/0 09/15

NOTES:
A. All linear dimensions are in millimeters

RSA (S–PVQFN–N16) PLASTIC QUAD FLATPACK NO–LEAD

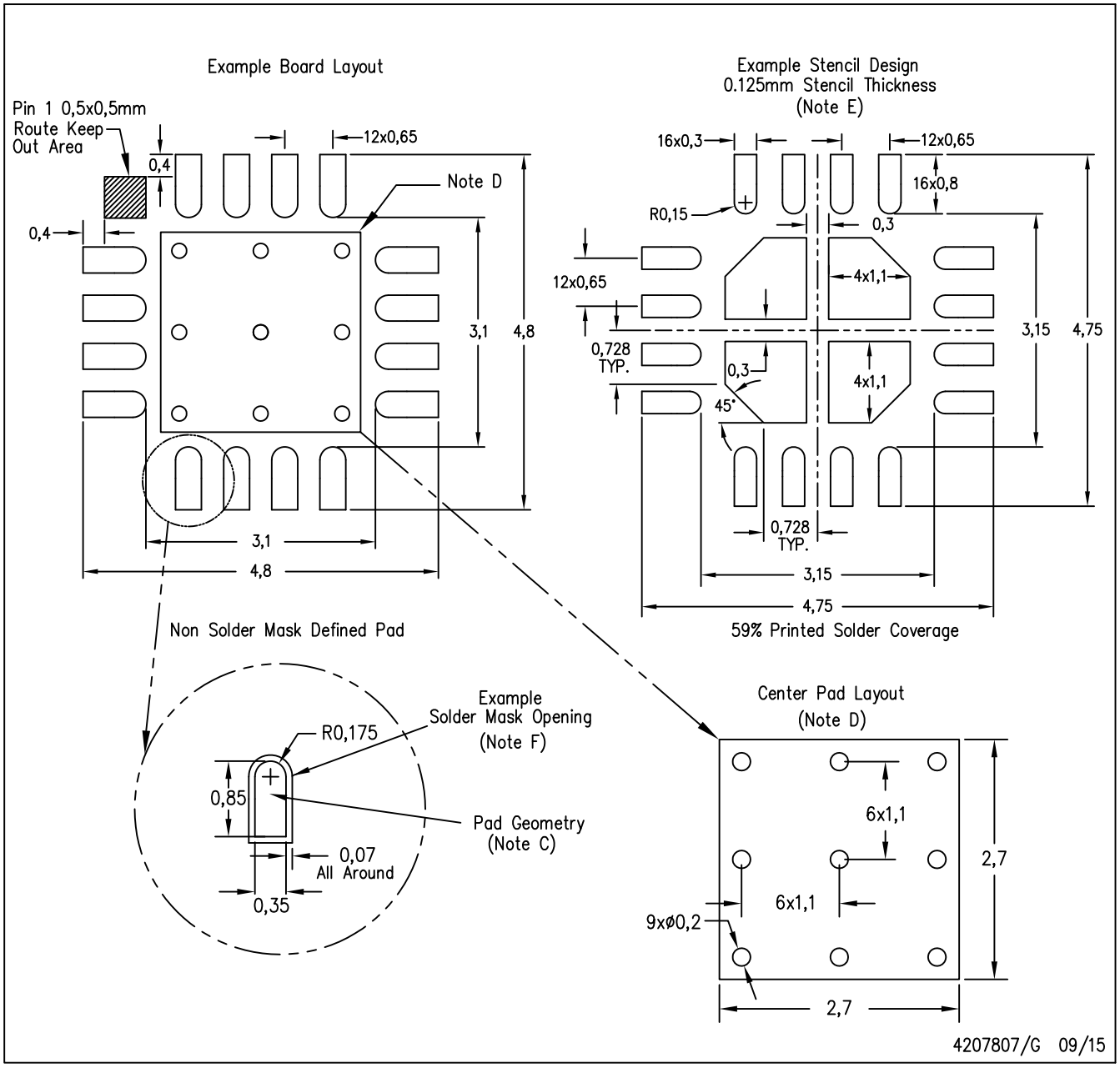

NOTES:
A. All linear dimensions are in millimeters.
B. This drawing is subject to change without notice.
C. Publication IPC–7351 is recommended for alternate designs.
D. This package is designed to be soldered to a thermal pad on the board. Refer to Application Note, QFN Packages, Texas Instruments Literature No. SLUA271, and also the Product Data Sheets for specific thermal information, via requirements, and recommended board layout. These documents are available at www.ti.com <http://www.ti.com>.
E. Laser cutting apertures with trapezoidal walls and also rounding corners will offer better paste release. Customers should contact their board assembly site for stencil design recommendations. Refer to IPC 7525 for stencil design considerations.
F. Customers should contact their board fabrication site for solder mask tolerances.

IMPORTANT NOTICE AND DISCLAIMER

TI PROVIDES TECHNICAL AND RELIABILITY DATA (INCLUDING DATASHEETS), DESIGN RESOURCES (INCLUDING REFERENCE DESIGNS), APPLICATION OR OTHER DESIGN ADVICE, WEB TOOLS, SAFETY INFORMATION, AND OTHER RESOURCES “AS IS” AND WITH ALL FAULTS, AND DISCLAIMS ALL WARRANTIES, EXPRESS AND IMPLIED, INCLUDING WITHOUT LIMITATION ANY IMPLIED WARRANTIES OF MERCHANTABILITY, FITNESS FOR A PARTICULAR PURPOSE OR NON-INFRINGEMENT OF THIRD PARTY INTELLECTUAL PROPERTY RIGHTS.

These resources are intended for skilled developers designing with TI products. You are solely responsible for (1) selecting the appropriate TI products for your application, (2) designing, validating and testing your application, and (3) ensuring your application meets applicable standards, and any other safety, security, or other requirements. These resources are subject to change without notice. TI grants you permission to use these resources only for development of an application that uses the TI products described in the resource. Other reproduction and display of these resources is prohibited. No license is granted to any other TI intellectual property right or to any third party intellectual property right. TI disclaims responsibility for, and you will fully indemnify TI and its representatives against, any claims, damages, costs, losses, and liabilities arising out of your use of these resources.

TI’s products are provided subject to TI’s Terms of Sale (www.ti.com/legal/termsofsale.html) or other applicable terms available either on ti.com or provided in conjunction with such TI products. TI’s provision of these resources does not expand or otherwise alter TI’s applicable warranties or warranty disclaimers for TI products.

Mailing Address: Texas Instruments, Post Office Box 655303, Dallas, Texas 75265
Copyright © 2020, Texas Instruments Incorporated