SN65C116xE Dual Differential Drivers and Receivers With ±15-kV ESD Protection

1 Features

- Meet or Exceed Standards TIA/EIA-422-B and ITU Recommendation V.11
- Operate From Single 5-V Power Supply
- ESD Protection for RS-422 Bus Pins
  - ±15-kV Human-Body Model (HBM)
  - ±8-kV IEC 61000-4-2, Contact Discharge
  - ±8-kV IEC 61000-4-2, Air-Gap Discharge
- Low Supply-Current Requirements: 9 mA Maximum
- Low Pulse Skew
- Receiver Input Impedance . . . 17 kΩ (Typical)
- Receiver Input Sensitivity . . . ±200 mV
- Receiver Common-Mode Input Voltage Range of –7 V to +7 V
- Glitch-Free Power-Up/Power-Down Protection
- Receiver 3-State Outputs Active-Low Enable (SN65C1167E Only)

2 Applications

- AC and Servo Motor Drives
- Factory Automation and Control
- Wireless Infrastructure

3 Description

The SN65C1167E and SN65C1168E consist of dual drivers and dual receivers with ±15-kV ESD (Human Body Model [HBM]) and ±8-kV ESD (IEC61000-4-2 Air-Gap Discharge and Contact Discharge) for RS-422 bus pins. The devices meet the requirements of TIA/EIA-422-B and ITU recommendation V.11.

The SN65C1167E combines dual 3-state differential line drivers and 3-state differential line receivers, both of which operate from a single 5-V power supply. The driver and receiver have active-high and active-low enables, respectively, which can be connected together externally to function as direction control.

SN65C1168E drivers have individual active-high enables.

Device Information(1)

PART NUMBER	PACKAGE	BODY SIZE (NOM)
SN65C116xE	SO (16)	10.30 mm × 5.30 mm
	TSSOP (16)	5.00 mm × 4.40 mm
	VQFN (16)	4.00 mm × 3.50 mm

(1) For all available packages, see the orderable addendum at the end of the data sheet.

Block Diagram

SN65C1167E

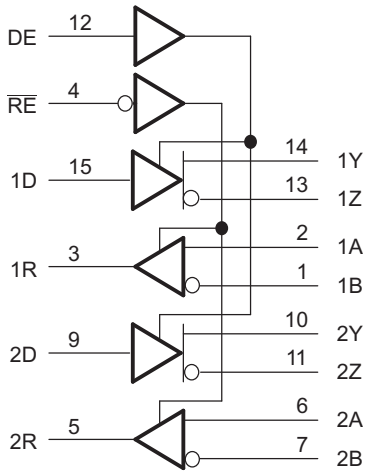

SN65C1168E

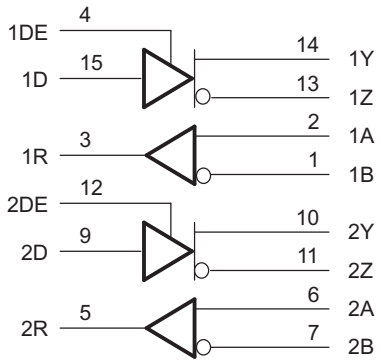

Copyright © 2017, Texas Instruments Incorporated

An IMPORTANT NOTICE at the end of this data sheet addresses availability, warranty, changes, use in safety-critical applications, intellectual property matters and other important disclaimers. PRODUCTION DATA.

Table of Contents

1 Features ... 1
2 Applications ... 1
3 Description ... 1
4 Revision History ... 2
5 Pin Configuration and Functions ... 3
6 Specifications ... 5
6.1 Absolute Maximum Ratings ... 5
6.2 Driver Output and Receiver Input ESD Ratings ... 5
6.3 Recommended Operating Conditions ... 6
6.4 Thermal Information ... 6
6.5 Driver Section Electrical Characteristics ... 7
6.6 Receiver Section Electrical Characteristics ... 7
6.7 Driver Section Switching Characteristics ... 8
6.8 Receiver Section Switching Characteristics ... 8
7 Parameter Measurement Information ... 9
8 Detailed Description ... 12
8.1 Overview ... 12
8.2 Functional Block Diagram ... 12
8.3 Feature Description ... 12
8.4 Device Functional Modes ... 13
9 Application and Implementation ... 14
9.1 Application Information ... 14
9.2 Typical Application ... 15
10 Power Supply Recommendations ... 15
11 Device and Documentation Support ... 16
11.1 Device Support ... 16
11.2 Related Links ... 16
11.3 Receiving Notification of Documentation Updates 16
11.4 Community Resources ... 16
11.5 Trademarks ... 16
11.6 Electrostatic Discharge Caution ... 16
11.7 Glossary ... 16
12 Mechanical, Packaging, and Orderable Information ... 16

4 Revision History

NOTE: Page numbers for previous revisions may differ from page numbers in the current version.

Changes from Revision A (April 2007) to Revision B	Page
• Added *ESD Ratings* table, *Feature Description* section, *Device Functional Modes*, *Application and Implementation* section, *Power Supply Recommendations* section, *Device and Documentation Support* section, and *Mechanical, Packaging, and Orderable Information* section	1
• Changed the Rise Time Max value From: 10 ns To: 8 ns in the *Driver Section Switching Characteristics* table	8
• Changed the Fall Time Max value From: 10 ns To: 8 ns in the *Driver Section Switching Characteristics* table	8
• Added Maximum switching frequency to the *Driver Section Switching Characteristics* table	8

Copyright © 2007–2017, Texas Instruments Incorporated

5 Pin Configuration and Functions

NS or PW Package
16 Pin (NS or TSSOP)
Top View

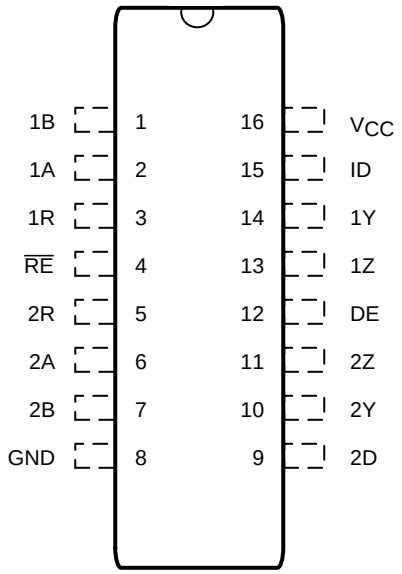

RGY Package
16 Pin (VQFN)
Top View

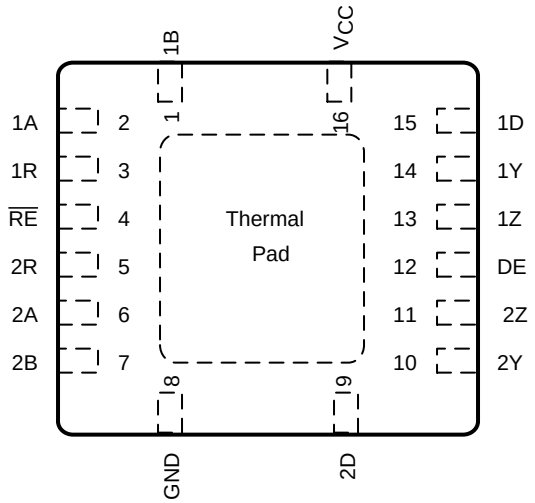

Pin Functions, SN65C1167E

PIN				I/O	DESCRIPTION
NAME	SO	TSSOP	VQFN		
1A	2	2	2	I	RS422 differential input (noninverting) to receiver 1
2A	6	6	6	I	RS422 differential input (noninverting) to receiver 2
1B	1	1	1	I	RS422 differential input (inverting) to receiver 1
2B	7	7	7	I	RS422 differential input (inverting) to receiver 2
1D	15	15	15	I	Logic data input to RS422 driver 1
2D	9	9	9	I	Logic data input to RS422 driver 2
DE	12	12	12	I	Driver enable (active high)
GND	8	8	8	—	Device ground pin
1R	3	3	3	O	Logic data output of RS422 receiver 1
2R	5	5	5	O	Logic data output of RS422 receiver 2
$\overline{RE}$	4	4	4	I	Receiver enable pin (active low)
V_{CC}	16	16	16	—	Power supply
1Y	14	14	14	O	RS-422 differential (noninverting) driver output 1
2Y	10	10	10	O	RS-422 differential (noninverting) driver output 1
1Z	13	13	13	O	RS-422 differential (inverting) driver output 1
2Z	11	11	11	O	RS-422 differential (inverting) driver output 2

Copyright © 2007–2017, Texas Instruments Incorporated

NS or PW Package
16 Pin (NS or TSSOP)
Top View

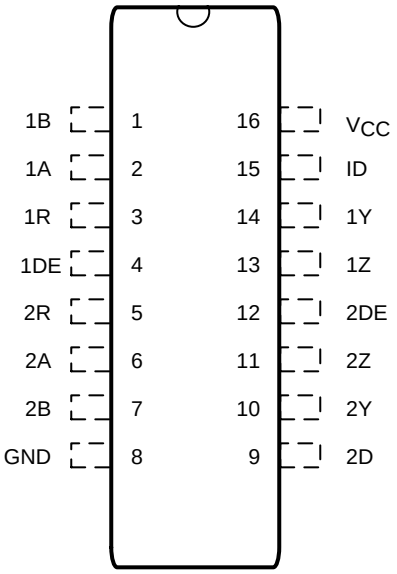

RGY Package
16 Pin (VQFN)
Top View

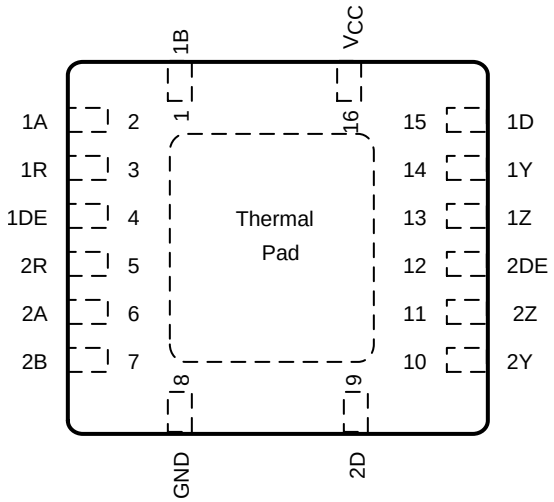

Pin Functions, SN65C1168E

PIN				I/O	DESCRIPTION
NAME	SO	TSSOP	VQFN		
1A	2	2	2	I	RS422 differential input (noninverting) to receiver 1
2A	6	6	6	I	RS422 differential input (noninverting) to receiver 1
1B	1	1	1	I	RS422 differential input (inverting) to receiver 1
2B	7	7	7	I	RS422 differential input (inverting) to receiver 2
1D	15	15	15	I	Logic data input to RS422 driver 1
2D	9	9	9	I	Logic data input to RS422 driver 2
1DE	4	4	4	I	Driver 1 enable (active high)
2DE	12	12	12	I	Driver 2 enable (active high)
GND	8	8	8	—	Device ground
1R	3	3	3	O	Logic data output of RS422 receiver 1
2R	5	5	5	O	Logic data output of RS422 receiver 2
V_{CC}	16	16	16	—	Power supply
1Y	14	14	14	O	RS-422 differential (noninverting) driver output 1
2Y	10	10	10	O	RS-422 differential (noninverting) driver output 2
1Z	13	13	13	O	RS-422 differential (noninverting) driver output 1
2Z	11	11	11	O	RS-422 differential (noninverting) driver output 2

Copyright © 2007–2017, Texas Instruments Incorporated

6 Specifications

6.1 Absolute Maximum Ratings

over recommended operating free-air temperature range (unless otherwise noted) [1]

			MIN	MAX	UNIT
V_{CC}	Supply voltage[2]		–0.5	7	V
V_I	Input voltage	Driver, DE, RE	–0.5	7	V
		A or B, Receiver	–14	14	
V_{ID}	Differential input voltage[3]	Receiver	–14	14	V
V_O	Output voltage	Driver	–0.5	7	V
		Receiver	–0.5	V_{CC} + 0.5	
I_{IK}	Input clamp current	Driver, V_I < 0		–20	mA
I_{OK}	Output clamp current	Driver, V_O < 0		–20	mA
		Receiver		±20	
I_O	Output current	Driver		±150	mA
		Receiver		±25	
I_{CC}	Supply current			200	mA
	GND current			–200	mA
T_J	Operating virtual junction temperature			150	°C
θ_{JA}	Package thermal impedance[4] [5]	NS package		64	°C/W
		PW package		108	
		RGY package		39	
T_A	Operating free-air temperature		–40	85	°C
T_{stg}	Storage temperature		–65	150	°C

(1) Stresses beyond those listed under "absolute maximum ratings" may cause permanent damage to the device. These are stress ratings only, and functional operation of the device at these or any other conditions beyond those indicated under "recommended operating conditions" is not implied. Exposure to absolute-maximum-rated conditions for extended periods may affect device reliability.
(2) All voltage values except differential input voltage are with respect to the network GND.
(3) Differential input voltage is measured at the noninverting terminal, with respect to the inverting terminal.
(4) Maximum power dissipation is a function of $T_J(max)$, θ_{JA}, and T_A. The maximum allowable power dissipation at any allowable ambient temperature is $P_D = (T_J(max) – T_A)/\theta_{JA}$. Selecting the maximum of 150°C can affect reliability.
(5) The package thermal impedance is calculated in accordance with JESD 51-7.

6.2 Driver Output and Receiver Input ESD Ratings

			VALUE	UNIT
$V_{(ESD)}$	Electrostatic discharge	Human-body model (HBM), per ANSI/ESDA/JEDEC JS-001[1]	±15000	V
		Charged-device model (CDM), per JEDEC specification JESD22-C101[2]	±1000	
		IEC 61000-4-2, air-gap discharge	±8000	
		IEC 61000-4-2, contact discharge	±8000	

(1) JEDEC document JEP155 states that 500-V HBM allows safe manufacturing with a standard ESD control process.
(2) JEDEC document JEP157 states that 250-V CDM allows safe manufacturing with a standard ESD control process.

Copyright © 2007–2017, Texas Instruments Incorporated

6.3 Recommended Operating Conditions

			MIN	NOM	MAX	UNIT
V_{CC}	Supply voltage		4.5	5	5.5	V
V_{IC}	Common-mode input voltage (1)	Receiver			±7	V
V_{ID}	Differential input voltage	Receiver			±7	V
V_I	Input voltage	Except A, B	0		5.5	V
V_O	Output voltage	Receiver	0		V_{CC}	V
V_{IH}	High-level input voltage	Except A, B	2			V
V_{IL}	Low-level input voltage	Except A, B			0.8	V
I_{OH}	High-level output current	Receiver			–6	mA
		Driver			–20	
I_{OL}	Low-level output current	Receiver			6	mA
		Driver			20	
T_A	Operating free-air temperature		–40		85	°C

(1) Refer to TIA/EIA-422-B for exact conditions.

6.4 Thermal Information

THERMAL METRIC (1)		SN65C116xE			UNIT
		SO (NS)	PW (TSSOP)	RGY (VQFN)	
		16 PINS	16 PINS	16 PINS	
$R_{\theta JA}$	Junction-to-ambient thermal resistance	74.9	98.9	42.8	°C/W
$R_{\theta JC(top)}$	Junction-to-case (top) thermal resistance	33.7	32.9	35.3	°C/W
$R_{\theta JB}$	Junction-to-board thermal resistance	37.1	44.6	18.5	°C/W
ψ_{JT}	Junction-to-top characterization parameter	6.1	1.9	0.5	°C/W
ψ_{JB}	Junction-to-board characterization parameter	36.6	44.1	18.4	°C/W
$R_{\theta JC(bot)}$	Junction-to-case (bottom) thermal resistance	n/a	n/a	3.3	°C/W

(1) For more information about traditional and new thermal metrics, see the *Semiconductor and IC Package Thermal Metrics* application report, SPRA953.

Copyright © 2007–2017, Texas Instruments Incorporated

6.5 Driver Section Electrical Characteristics

over recommended supply voltage and operating free-air temperature ranges (unless otherwise noted)

PARAMETER		TEST CONDITIONS		MIN	TYP(1)	MAX	UNIT
V_{IK}	Input clamp voltage	I_I = –18 mA				–1.5	V
V_{OH}	High-level output voltage	V_{IH} = 2 V, V_{IL} = 0.8 V, I_{OH} = –20 mA		2.4	3.5		V
V_{OL}	Low-level output voltage	V_{IH} = 2 V, V_{IL} = 0.8 V, I_{OL} = 20 mA			0.2	0.4	V
$\|V_{OD1}\|$	Differential output voltage 1	I_O = 0 mA		2		6	V
$\|V_{OD2}\|$	Differential output voltage 2	R_L = 100 Ω, See Figure 1 (2)		2	3.7		V
$\Delta\|V_{OD}\|$	Change in magnitude of differential output voltage	R_L = 100 Ω, See Figure 1 (2)				±0.4	V
V_{OC}	Common-mode output voltage	R_L = 100 Ω, See Figure 1 (2)				±3	V
$\Delta\|V_{OC}\|$	Change in magnitude of common-mode output voltage	R_L = 100 Ω, See Figure 1 (2)				±0.4	V
$I_{O(OFF)}$	Output current with power off	V_{CC} = 0 V	V_O = 6 V			100	μA
			V_O = –0.25 V			100	
I_{OZ}	High-impedance-state output current	V_O = 2.5 V				20	μA
		V_O = 5 V				–20	
I_{IH}	High-level input current	V_I = V_{CC} or V_{IH}				1	μA
I_{IL}	Low-level input current	V_I = GND or V_{IL}				–1	μA
I_{OS}	Short-circuit output current	V_O = V_{CC} or GND(3)		–30		–150	mA
I_{CC}	Supply current (total package)	No load, Enabled	V_I = V_{CC} or GND		4	6	mA
			V_I = 2.4 or 0.5 V(4)		5	9	
C_i	Input capacitance				6		pF

(1) All typical values are at V_{CC} = 5 V and T_A = 25°C.
(2) Refer to TIA/EIA-422-B for exact conditions.
(3) Not more than one output should be shorted at a time, and the duration of the short circuit should not exceed one second.
(4) This parameter is measured per input, while the other inputs are at V_{CC} or GND.

6.6 Receiver Section Electrical Characteristics

over recommended ranges of common-mode input voltage, supply voltage, and operating free-air temperature (unless otherwise noted)

PARAMETER			TEST CONDITIONS		MIN	TYP(1)	MAX	UNIT
V_{IT+}	Positive-going input threshold voltage, differential input						0.2	V
V_{IT-}	Negative-going input threshold voltage, differential input				–0.2(2)			V
V_{hys}	Input hysteresis (V_{IT+} – V_{IT-})					60		mV
V_{IK}	Input clamp voltage, $\overline{RE}$	SN65C1167E	I_I = –18 mA				–1.5	V
V_{OH}	High-level output voltage		V_{ID} = 200 mV,	I_{OH} = –6 mA	3.8	4.2		V
V_{OL}	Low-level output voltage		V_{ID} = –200 mV,	I_{OL} = 6 mA		0.1	0.3	V
I_{OZ}	High-impedance state output current	SN65C1167E	V_O = V_{CC} or GND			±0.5	±5	μA
I_I	Line input current		Other input at 0 V	V_I = 10 V			1.5	mA
				V_I = –10 V			–2.5	
I_I	Enable input current, $\overline{RE}$	SN65C1167E	V_I = V_{CC} or GND				±1	μA
r_I	Input resistance		V_{IC} = –7 V to 7 V,	Other input at 0 V	4	17		kΩ
I_{CC}	Supply current (total package)		No load, Enabled	V_I = V_{CC} or GND		4	6	mA
				V_{IH} = 2.4 V or 0.5 V(3)		5	9	

(1) All typical values are at V_{CC} = 5 V and T_A = 25°C.
(2) The algebraic convention, where the less positive (more negative) limit is designated as minimum, is used in this data sheet for common-mode input voltage and threshold voltage levels only.
(3) Refer to TIA/EIA-422-B for exact conditions.

Copyright © 2007–2017, Texas Instruments Incorporated

6.7 Driver Section Switching Characteristics

over recommended supply voltage and operating free-air temperature ranges (unless otherwise noted)

PARAMETER		TEST CONDITIONS		MIN	TYP(1)	MAX	UNIT
t_{PHL}	Propagation delay time, high- to low-level output	R1 = R2 = 50 Ω, C1 = C2 = C3 = 40 pF, See Figure 2	R3 = 500 Ω, S1 is open,		8	16	ns
t_{PLH}	Propagation delay time, low- to high-level output				8	16	ns
$t_{sk(p)}$	Pulse skew				1.5	4	ns
t_r	Rise time	R1 = R2 = 50 Ω, C1 = C2 = C3 = 40 pF, See Figure 3	R3 = 500 Ω, S1 is open,		5	8	ns
t_f	Fall time				5	8	ns
t_{PZH}	Output-enable time to high level	R1 = R2 = 50 Ω, C1 = C2 = C3 = 40 pF, See Figure 4	R3 = 500 Ω, S1 is closed,		10	19	ns
t_{PZL}	Output-enable time to low level				10	19	ns
t_{PHZ}	Output-disable time from high level	R1 = R2 = 50 Ω, C1 = C2 = C3 = 40 pF, See Figure 4	R3 = 500 Ω, S1 is closed,		7	16	ns
t_{PLZ}	Output-disable time from low level				7	16	ns
f_{SW}	Maximum switching frequency	R1 = R2 = 50 Ω, C1 = C2 = C3 = 40 pF, See Figure 3	R3 = 500 Ω, S1 is open,	20			MHz

(1) All typical values are at V_{CC} = 5 V and T_A = 25°C.

6.8 Receiver Section Switching Characteristics

over recommended operating free-air temperature range (unless otherwise noted)(1)

PARAMETER			TEST CONDITIONS		MIN	TYP(2)	MAX	UNIT
t_{PLH}	Propagation delay time, low- to high-level output		See Figure 5		9	15	27	ns
t_{PHL}	Propagation delay time, high- to low-level output		See Figure 5		9	15	27	ns
t_{TLH}	Transition time, low- to high-level output		V_{IC} = 0 V,	See Figure 5		4	9	ns
t_{THL}	Transition time, high- to low-level output					4	9	ns
t_{PZH}	Output-enable time to high level	SN65C1167E	R_L = 1 kΩ, C_L= 50 pF	See Figure 6		7	22	ns
t_{PZL}	Output-enable time to low level					7	22	ns
t_{PHZ}	Output-disable time from high level					12	22	ns
t_{PLZ}	Output-disable time from low level					12	22	ns

(1) Measured per input while the other inputs are at V_{CC} or GND
(2) All typical values are at V_{CC} = 5 V and T_A = 25°C.

Copyright © 2007–2017, Texas Instruments Incorporated

7 Parameter Measurement Information

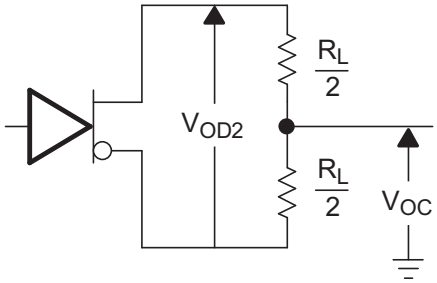

Figure 1. Driver Test Circuit, V_{OD} and V_{OC}

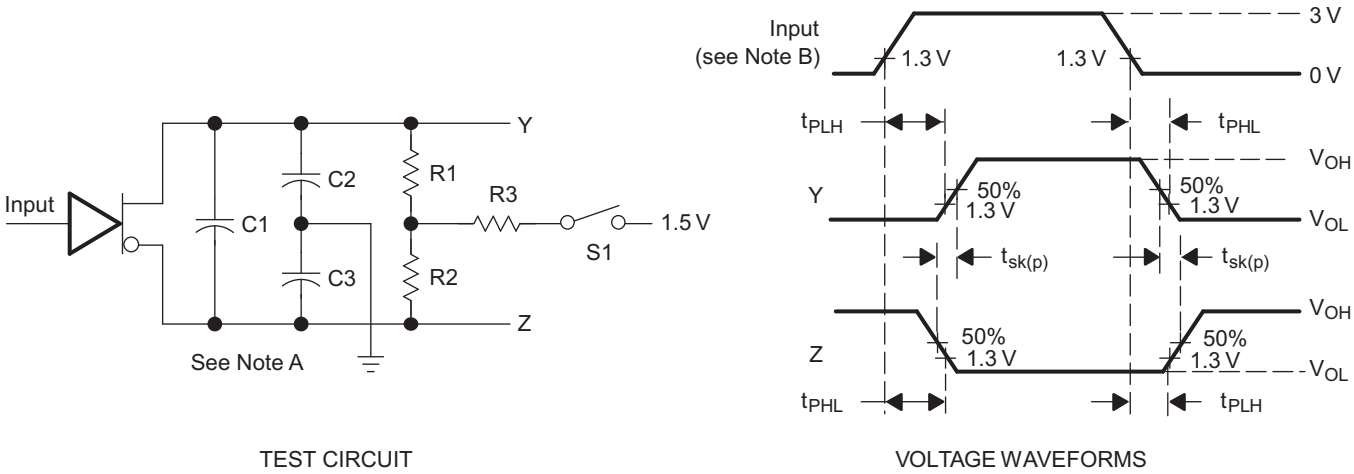

A. C1, C2, and C3 include probe and jig capacitance.

B. The input pulse is supplied by a generator having the following characteristics: PRR = 1 MHz, duty cycle = 50%, $t_r = t_f$ ≤ 6 ns.

Figure 2. Driver Test Circuit and Voltage Waveforms

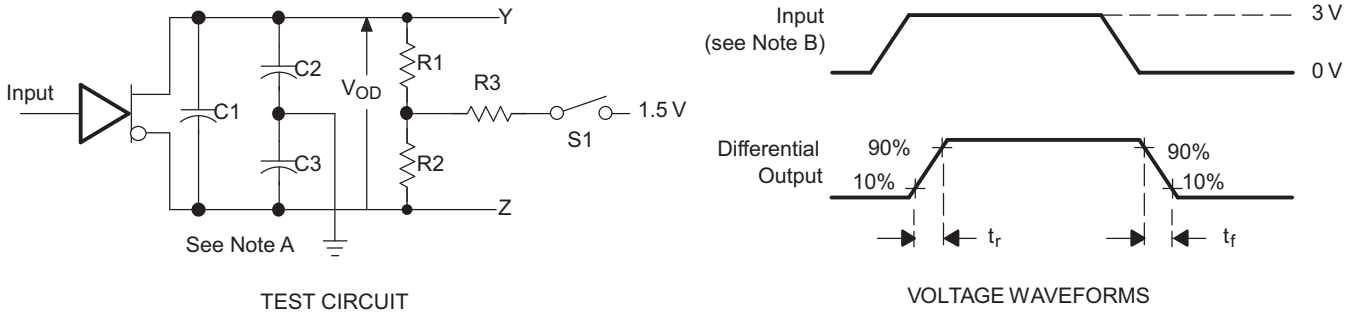

A. C1, C2, and C3 include probe and jig capacitance.

B. The input pulse is supplied by a generator having the following characteristics: PRR = 1 MHz, duty cycle = 50%, $t_r = t_f$ ≤ 6 ns.

Figure 3. Driver Test Circuit and Voltage Waveforms

Parameter Measurement Information (continued)

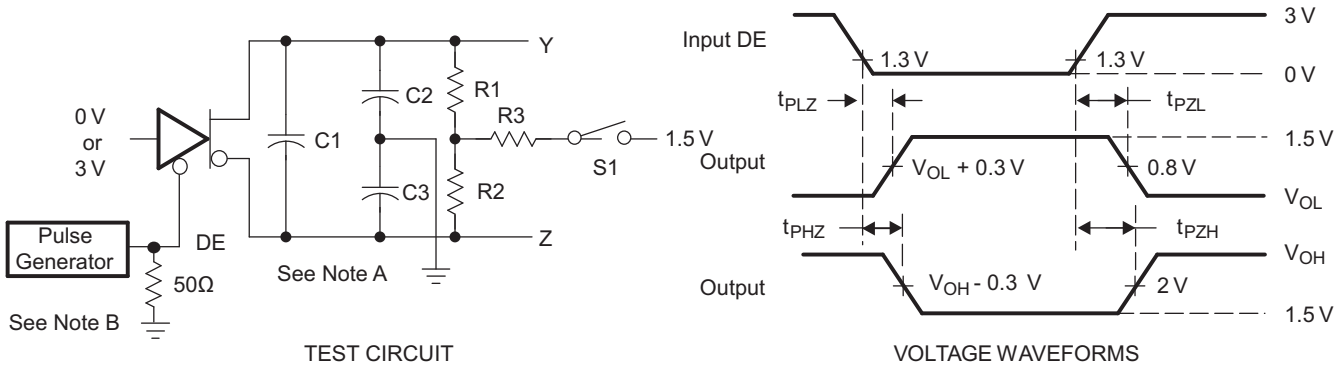

A. C1, C2, and C3 include probe and jig capacitance.

B. The input pulse is supplied by a generator having the following characteristics: PRR = 1 MHz, duty cycle = 50%, $t_r = t_f \leq 6$ ns.

Figure 4. Driver Test Circuit and Voltage Waveforms

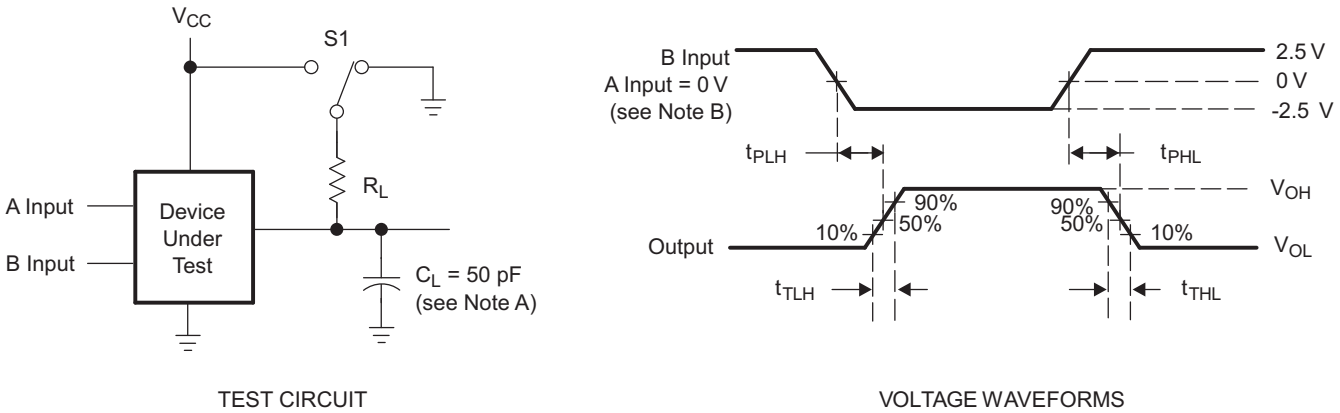

A. C1, C2, and C3 include probe and jig capacitance.

B. The input pulse is supplied by a generator having the following characteristics: PRR = 1 MHz, duty cycle = 50%, $t_r = t_f \leq 6$ ns.

Figure 5. Receiver Test Circuit and Voltage Waveforms

Copyright © 2007–2017, Texas Instruments Incorporated

Parameter Measurement Information (continued)

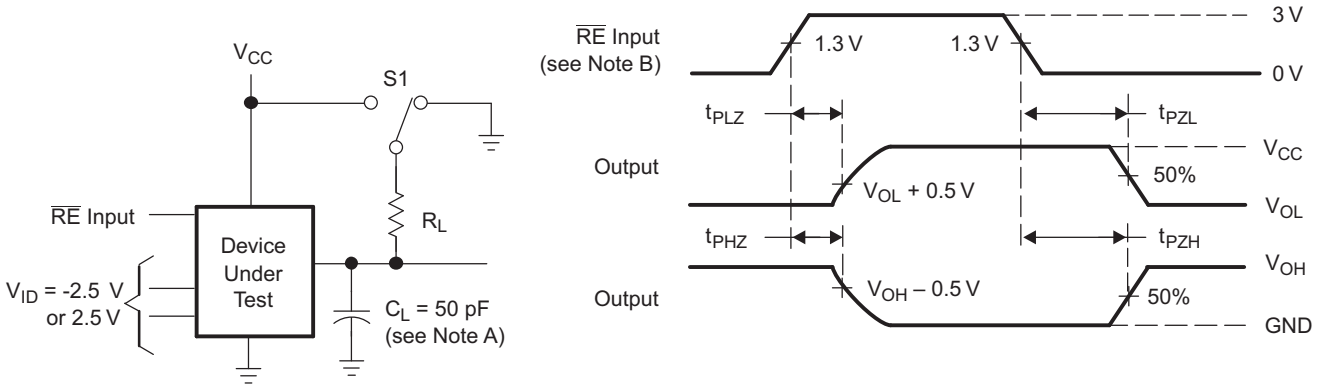

TEST CIRCUIT

VOLTAGE WAVEFORMS

A. C1, C2, and C3 include probe and jig capacitance.

B. The input pulse is supplied by a generator having the following characteristics: PRR = 1 MHz, duty cycle = 50%, $t_r = t_f \leq 6$ ns.

Figure 6. Receiver Test Circuit and Voltage Waveforms

8 Detailed Description

8.1 Overview

The SN65C1167E and SN65C1168E consist of dual drivers and dual receivers powered from a single 5-V supply. These devices meet the requirements of TIA/EIA-422-B and ITU recommendation V.11.

8.2 Functional Block Diagram

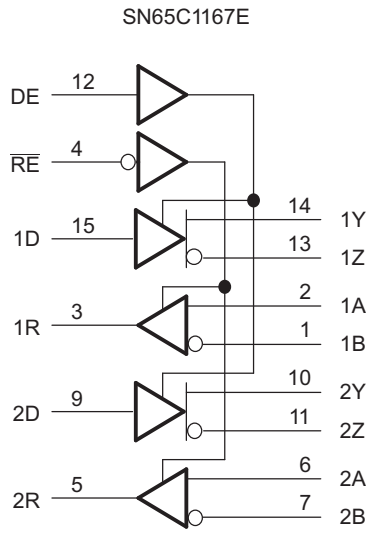

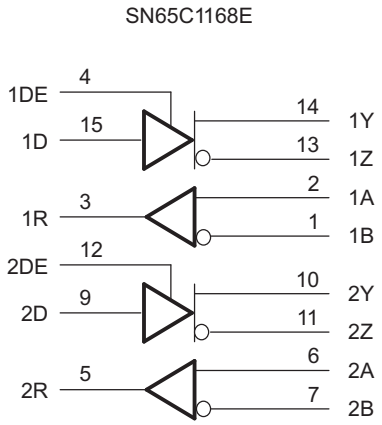

Copyright © 2017, Texas Instruments Incorporated

8.3 Feature Description

8.3.1 Active High Driver Output Enables

Both drivers of SN65C1167E can be configured with the single DE logic input. Both drivers are set at high-impedance when disabled.

SN65C1168E drivers can be configured individually by 1DE and 2DE logic inputs. Both drivers are set at high-impedance when disabled.

8.3.2 Active Low Receiver Enables

Both SN65C1167E receivers can be configured with the single $\overline{RE}$ logic input. Receiver logic outputs are set at high-impedance when disabled.

Copyright © 2007–2017, Texas Instruments Incorporated

8.4 Device Functional Modes

Table 1 and Table 2 list the functional modes of SN65C1167E and SN65C1168E.

Table 1. Each Driver

INPUT D	ENABLE DE	OUTPUTS	
		Y	Z
H	H	H	L
L	H	L	H
X	L	Z	Z

Table 2. SN65C1167E, Each Receiver(1)

DIFFERENTIAL INPUTS A–B	ENABLE $\overline{RE}$	OUTPUT R
$V_{ID} \geq 0.2$ V	L	H
-0.2 V $< V_{ID} < 0.2$ V	L	?
$V_{ID} \leq -0.2$ V	L	L
X	H	Z
Open	L	H

(1) H = High level, L = Low level, ? = Indeterminate, X = Irrelevant, Z = High impedance (off)

Table 3. SN65C1168E, Each Receiver(1)

DIFFERENTIAL INPUTS A–B	OUTPUT R
$V_{ID} \geq 0.2$ V	H
-0.2 V $< V_{ID} < 0.2$ V	?
$V_{ID} \leq -0.2$ V	L
Open	H

(1) H = High level, L = Low level, ? = Indeterminate

9 Application and Implementation

NOTE

Information in the following applications sections is not part of the TI component specification, and TI does not warrant its accuracy or completeness. TI's customers are responsible for determining suitability of components for their purposes. Customers should validate and test their design implementation to confirm system functionality.

9.1 Application Information

Figure 7 shows a typical RS-422 application. One transmitter is able to broadcast to multiple receiving nodes connected together over a shared differential bus. Twisted-pair cabling with a controlled differential impedance is used, and a termination resistance is placed at the farthest receive end of the cable in order to match the transmission line impedance and minimize signal reflections.

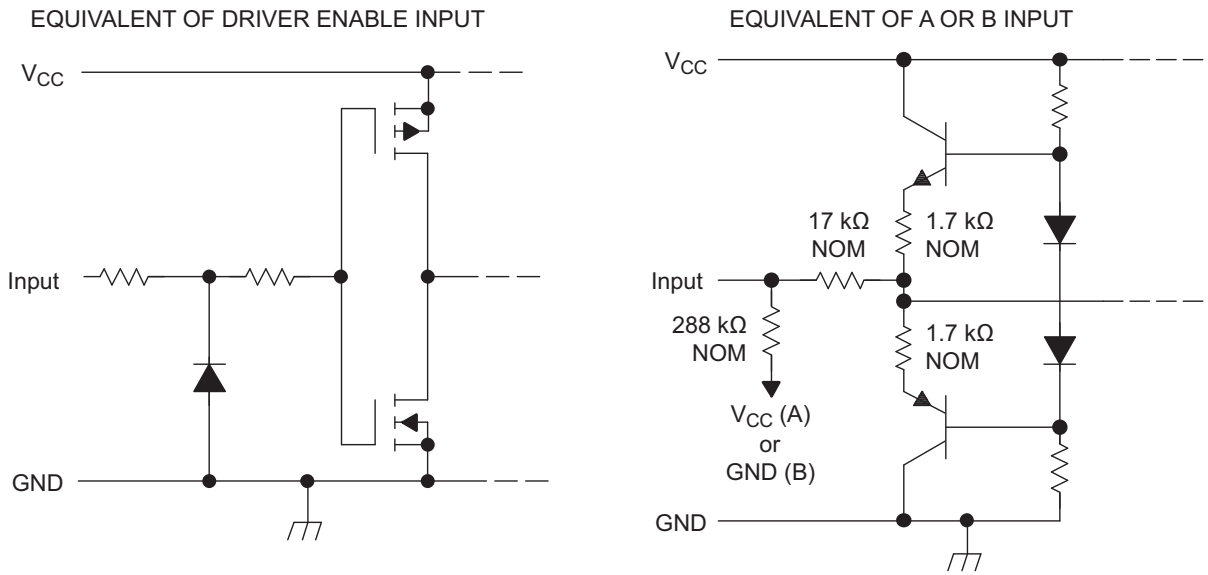

Figure 7. Schematic of Inputs

Copyright © 2007–2017, Texas Instruments Incorporated

Application Information (continued)

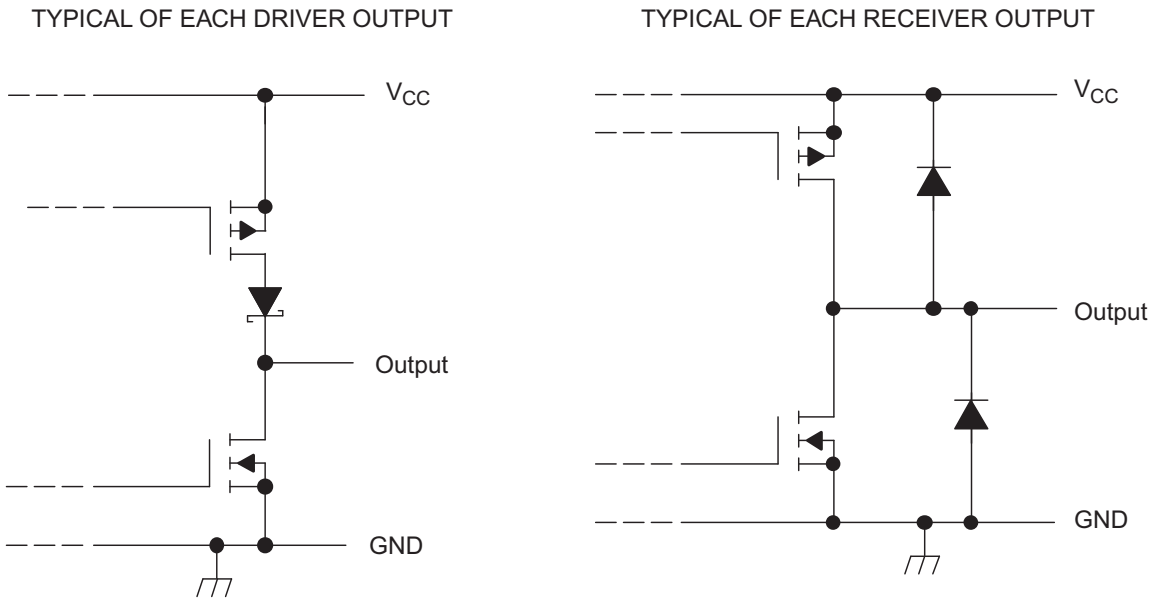

Figure 8. Schematic of Outputs

9.2 Typical Application

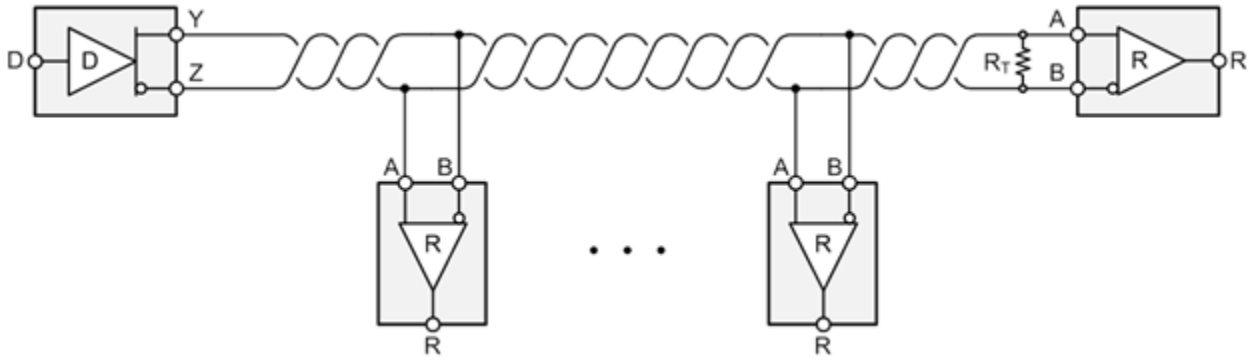

Figure 9. Typical RS-422 Application

9.2.1 Design Requirements

A typical RS-422 implementation using SN65C116xE requires the following:

- 5 V power source.
- Connector that ensures the correct polarity for port pins.
- Cabling that supports the desired operating rate and transmission distance.

9.2.2 Detailed Design Procedure

Place the device close to bus connector to keep traces (stub) short to prevent adding reflections to the bus line. If desired, add external fail-safe biasing to ensure ±200 mV on the A-B port when the driver circuit is disabled.

10 Power Supply Recommendations

Use a 5 V power supply for V_{CC} place 0.1-µF bypass capacitors close to the power supply pins to reduce errors coupling in from noisy or high impedance power supplies.

11 Device and Documentation Support

11.1 Device Support

11.1.1 Third-Party Products Disclaimer

TI'S PUBLICATION OF INFORMATION REGARDING THIRD-PARTY PRODUCTS OR SERVICES DOES NOT CONSTITUTE AN ENDORSEMENT REGARDING THE SUITABILITY OF SUCH PRODUCTS OR SERVICES OR A WARRANTY, REPRESENTATION OR ENDORSEMENT OF SUCH PRODUCTS OR SERVICES, EITHER ALONE OR IN COMBINATION WITH ANY TI PRODUCT OR SERVICE.

11.2 Related Links

The table below lists quick access links. Categories include technical documents, support and community resources, tools and software, and quick access to sample or buy.

Table 4. Related Links

PARTS	PRODUCT FOLDER	SAMPLE & BUY	TECHNICAL DOCUMENTS	TOOLS & SOFTWARE	SUPPORT & COMMUNITY
SN65C1167E	Click here	Click here	Click here	Click here	Click here
SN65C1168E	Click here	Click here	Click here	Click here	Click here

11.3 Receiving Notification of Documentation Updates

To receive notification of documentation updates, navigate to the device product folder on ti.com. In the upper right corner, click on Alert me to register and receive a weekly digest of any product information that has changed. For change details, review the revision history included in any revised document.

11.4 Community Resources

The following links connect to TI community resources. Linked contents are provided "AS IS" by the respective contributors. They do not constitute TI specifications and do not necessarily reflect TI's views; see TI's Terms of Use.

TI E2E™ Online Community ***TI's Engineer-to-Engineer (E2E) Community.*** Created to foster collaboration among engineers. At e2e.ti.com, you can ask questions, share knowledge, explore ideas and help solve problems with fellow engineers.

Design Support ***TI's Design Support*** Quickly find helpful E2E forums along with design support tools and contact information for technical support.

11.5 Trademarks

E2E is a trademark of Texas Instruments.
All other trademarks are the property of their respective owners.

11.6 Electrostatic Discharge Caution

These devices have limited built-in ESD protection. The leads should be shorted together or the device placed in conductive foam during storage or handling to prevent electrostatic damage to the MOS gates.

11.7 Glossary

SLYZ022 — *TI Glossary*.

This glossary lists and explains terms, acronyms, and definitions.

12 Mechanical, Packaging, and Orderable Information

The following pages include mechanical, packaging, and orderable information. This information is the most current data available for the designated devices. This data is subject to change without notice and revision of this document. For browser-based versions of this data sheet, refer to the left-hand navigation.

Copyright © 2007–2017, Texas Instruments Incorporated

PACKAGING INFORMATION

Orderable Device	Status (1)	Package Type	Package Drawing	Pins	Package Qty	Eco Plan (2)	Lead finish/ Ball material (6)	MSL Peak Temp (3)	Op Temp (°C)	Device Marking (4/5)	Samples
SN65C1167ENS	ACTIVE	SO	NS	16	50	RoHS & Green	NIPDAU	Level-1-260C-UNLIM	-40 to 85	65C1167E	Samples
SN65C1167ENSR	ACTIVE	SO	NS	16	2000	RoHS & Green	NIPDAU	Level-1-260C-UNLIM	-40 to 85	65C1167E	Samples
SN65C1167EPW	ACTIVE	TSSOP	PW	16	90	RoHS & Green	NIPDAU	Level-1-260C-UNLIM	-40 to 85	CB1167E	Samples
SN65C1167EPWR	ACTIVE	TSSOP	PW	16	2000	RoHS & Green	NIPDAU	Level-1-260C-UNLIM	-40 to 85	CB1167E	Samples
SN65C1167ERGYR	ACTIVE	VQFN	RGY	16	3000	RoHS & Green	NIPDAU	Level-2-260C-1 YEAR	-40 to 85	CB1167	Samples
SN65C1168ENS	ACTIVE	SO	NS	16	50	RoHS & Green	NIPDAU	Level-1-260C-UNLIM	-40 to 85	65C1168E	Samples
SN65C1168ENSG4	ACTIVE	SO	NS	16	50	RoHS & Green	NIPDAU	Level-1-260C-UNLIM	-40 to 85	65C1168E	Samples
SN65C1168ENSR	ACTIVE	SO	NS	16	2000	RoHS & Green	NIPDAU	Level-1-260C-UNLIM	-40 to 85	65C1168E	Samples
SN65C1168EPW	ACTIVE	TSSOP	PW	16	90	RoHS & Green	NIPDAU	Level-1-260C-UNLIM	-40 to 85	CB1168E	Samples
SN65C1168EPWR	ACTIVE	TSSOP	PW	16	2000	RoHS & Green	NIPDAU	Level-1-260C-UNLIM	-40 to 85	CB1168E	Samples
SN65C1168EPWRG4	ACTIVE	TSSOP	PW	16	2000	RoHS & Green	NIPDAU	Level-1-260C-UNLIM	-40 to 85	CB1168E	Samples
SN65C1168ERGYR	ACTIVE	VQFN	RGY	16	3000	RoHS & Green	NIPDAU	Level-2-260C-1 YEAR	-40 to 85	CB1168	Samples

(1) The marketing status values are defined as follows:
ACTIVE: Product device recommended for new designs.
LIFEBUY: TI has announced that the device will be discontinued, and a lifetime-buy period is in effect.
NRND: Not recommended for new designs. Device is in production to support existing customers, but TI does not recommend using this part in a new design.
PREVIEW: Device has been announced but is not in production. Samples may or may not be available.
OBSOLETE: TI has discontinued the production of the device.

(2) **RoHS:** TI defines "RoHS" to mean semiconductor products that are compliant with the current EU RoHS requirements for all 10 RoHS substances, including the requirement that RoHS substance do not exceed 0.1% by weight in homogeneous materials. Where designed to be soldered at high temperatures, "RoHS" products are suitable for use in specified lead-free processes. TI may reference these types of products as "Pb-Free".
RoHS Exempt: TI defines "RoHS Exempt" to mean products that contain lead but are compliant with EU RoHS pursuant to a specific EU RoHS exemption.
Green: TI defines "Green" to mean the content of Chlorine (Cl) and Bromine (Br) based flame retardants meet JS709B low halogen requirements of <=1000ppm threshold. Antimony trioxide based flame retardants must also meet the <=1000ppm threshold requirement.

(3) MSL, Peak Temp. - The Moisture Sensitivity Level rating according to the JEDEC industry standard classifications, and peak solder temperature.

(4) There may be additional marking, which relates to the logo, the lot trace code information, or the environmental category on the device.

(5) Multiple Device Markings will be inside parentheses. Only one Device Marking contained in parentheses and separated by a "~" will appear on a device. If a line is indented then it is a continuation of the previous line and the two combined represent the entire Device Marking for that device.

(6) Lead finish/Ball material - Orderable Devices may have multiple material finish options. Finish options are separated by a vertical ruled line. Lead finish/Ball material values may wrap to two lines if the finish value exceeds the maximum column width.

Important Information and Disclaimer: The information provided on this page represents TI's knowledge and belief as of the date that it is provided. TI bases its knowledge and belief on information provided by third parties, and makes no representation or warranty as to the accuracy of such information. Efforts are underway to better integrate information from third parties. TI has taken and continues to take reasonable steps to provide representative and accurate information but may not have conducted destructive testing or chemical analysis on incoming materials and chemicals. TI and TI suppliers consider certain information to be proprietary, and thus CAS numbers and other limited information may not be available for release.

In no event shall TI's liability arising out of such information exceed the total purchase price of the TI part(s) at issue in this document sold by TI to Customer on an annual basis.

TAPE AND REEL INFORMATION

REEL DIMENSIONS

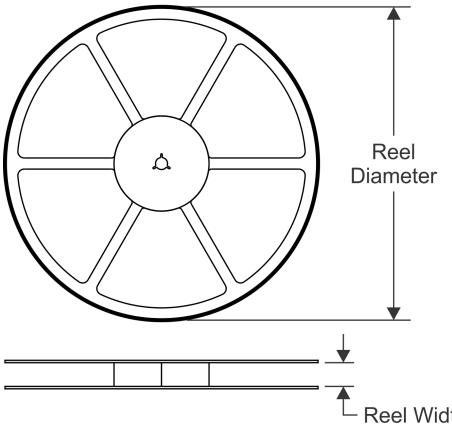

TAPE DIMENSIONS

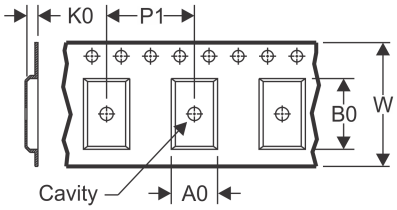

A0	Dimension designed to accommodate the component width
B0	Dimension designed to accommodate the component length
K0	Dimension designed to accommodate the component thickness
W	Overall width of the carrier tape
P1	Pitch between successive cavity centers

QUADRANT ASSIGNMENTS FOR PIN 1 ORIENTATION IN TAPE

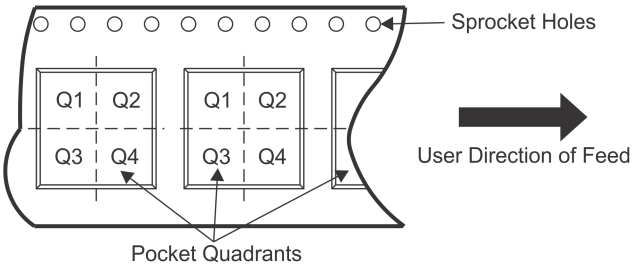

*All dimensions are nominal

Device	Package Type	Package Drawing	Pins	SPQ	Reel Diameter (mm)	Reel Width W1 (mm)	A0 (mm)	B0 (mm)	K0 (mm)	P1 (mm)	W (mm)	Pin1 Quadrant
SN65C1167ENSR	SO	NS	16	2000	330.0	16.4	8.2	10.5	2.5	12.0	16.0	Q1
SN65C1167EPWR	TSSOP	PW	16	2000	330.0	12.4	6.9	5.6	1.6	8.0	12.0	Q1
SN65C1167ERGYR	VQFN	RGY	16	3000	330.0	12.4	3.8	4.3	1.5	8.0	12.0	Q1
SN65C1168ENSR	SO	NS	16	2000	330.0	16.4	8.2	10.5	2.5	12.0	16.0	Q1
SN65C1168EPWR	TSSOP	PW	16	2000	330.0	12.4	6.9	5.6	1.6	8.0	12.0	Q1
SN65C1168ERGYR	VQFN	RGY	16	3000	330.0	12.4	3.8	4.3	1.5	8.0	12.0	Q1

TAPE AND REEL BOX DIMENSIONS

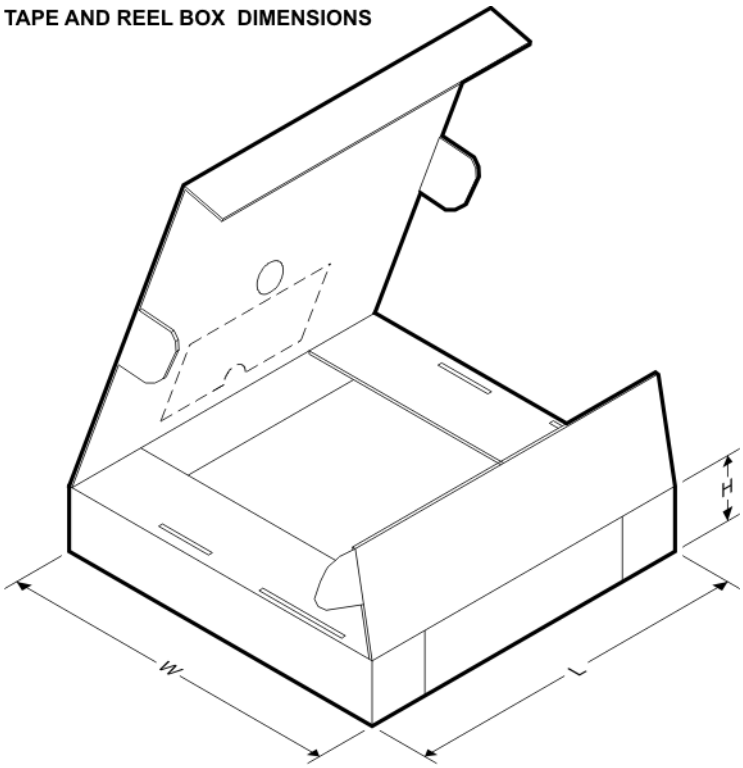

*All dimensions are nominal

Device	Package Type	Package Drawing	Pins	SPQ	Length (mm)	Width (mm)	Height (mm)
SN65C1167ENSR	SO	NS	16	2000	853.0	449.0	35.0
SN65C1167EPWR	TSSOP	PW	16	2000	853.0	449.0	35.0
SN65C1167ERGYR	VQFN	RGY	16	3000	367.0	367.0	35.0
SN65C1168ENSR	SO	NS	16	2000	367.0	367.0	38.0
SN65C1168EPWR	TSSOP	PW	16	2000	853.0	449.0	35.0
SN65C1168ERGYR	VQFN	RGY	16	3000	853.0	449.0	35.0

TUBE

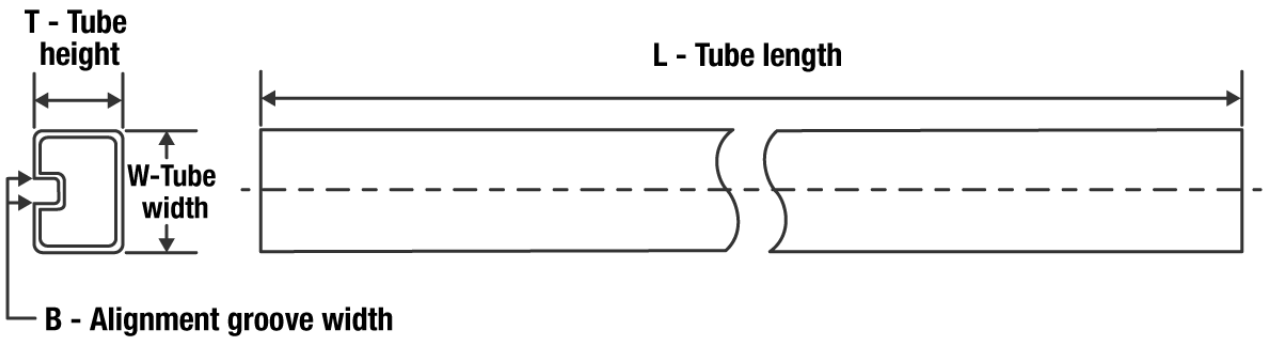

*All dimensions are nominal

Device	Package Name	Package Type	Pins	SPQ	L (mm)	W (mm)	T (µm)	B (mm)
SN65C1167ENS	NS	SOP	16	50	530	10.5	4000	4.1
SN65C1167EPW	PW	TSSOP	16	90	530	10.2	3600	3.5
SN65C1168ENS	NS	SOP	16	50	530	10.5	4000	4.1
SN65C1168ENSG4	NS	SOP	16	50	530	10.5	4000	4.1
SN65C1168EPW	PW	TSSOP	16	90	530	10.2	3600	3.5

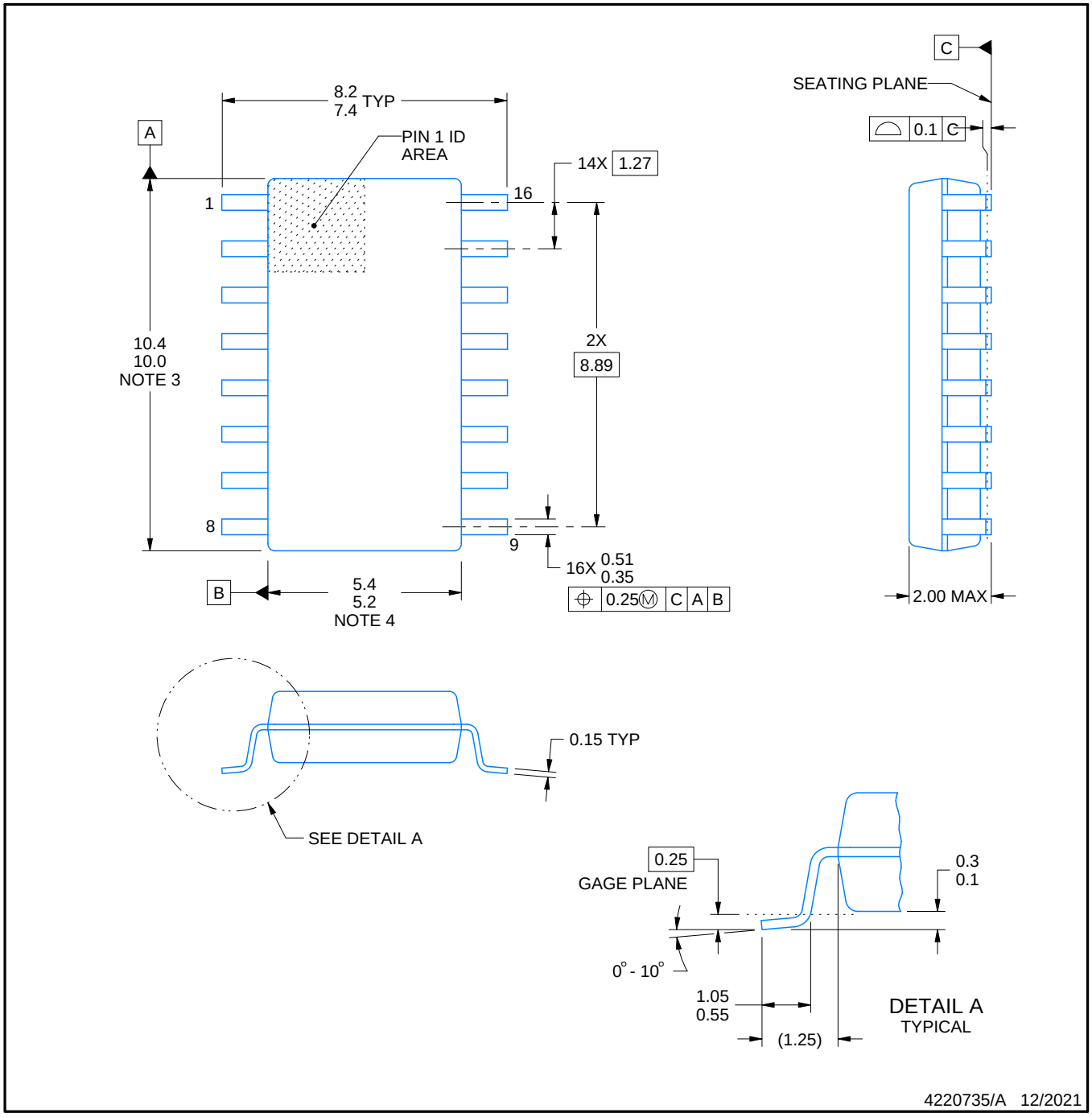

NOTES:

1. All linear dimensions are in millimeters. Dimensions in parenthesis are for reference only. Dimensioning and tolerancing per ASME Y14.5M.
2. This drawing is subject to change without notice.
3. This dimension does not include mold flash, protrusions, or gate burrs. Mold flash, protrusions, or gate burrs shall not exceed 0.15 mm, per side.
4. This dimension does not include interlead flash. Interlead flash shall not exceed 0.25 mm, per side.

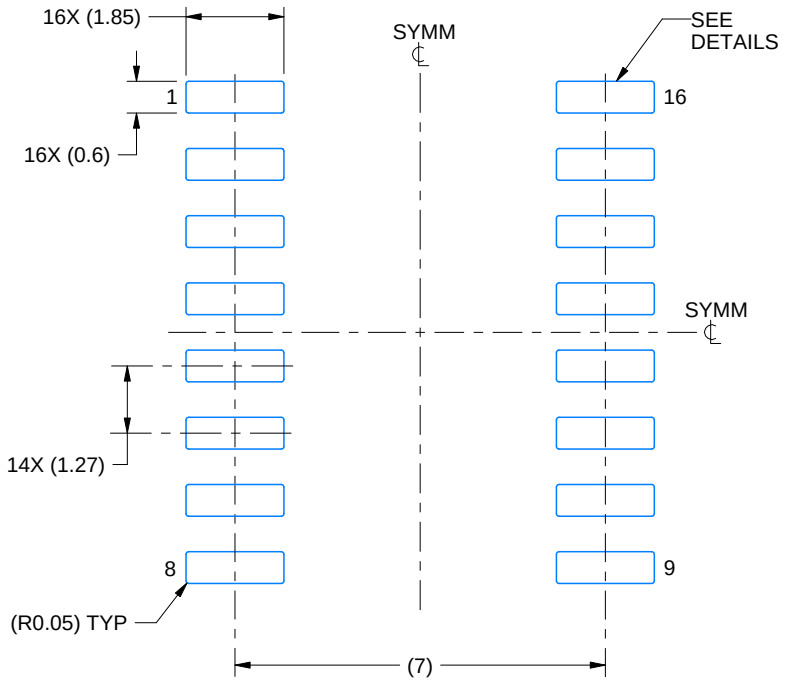

LAND PATTERN EXAMPLE
SCALE:7X

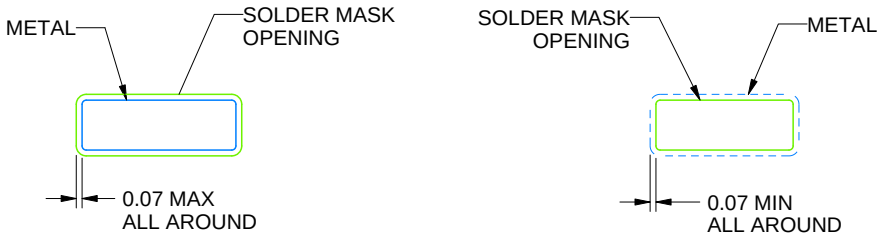

NON SOLDER MASK DEFINED

SOLDER MASK DEFINED

SOLDER MASK DETAILS

4220735/A 12/2021

NOTES: (continued)

5. Publication IPC-7351 may have alternate designs.
6. Solder mask tolerances between and around signal pads can vary based on board fabrication site.

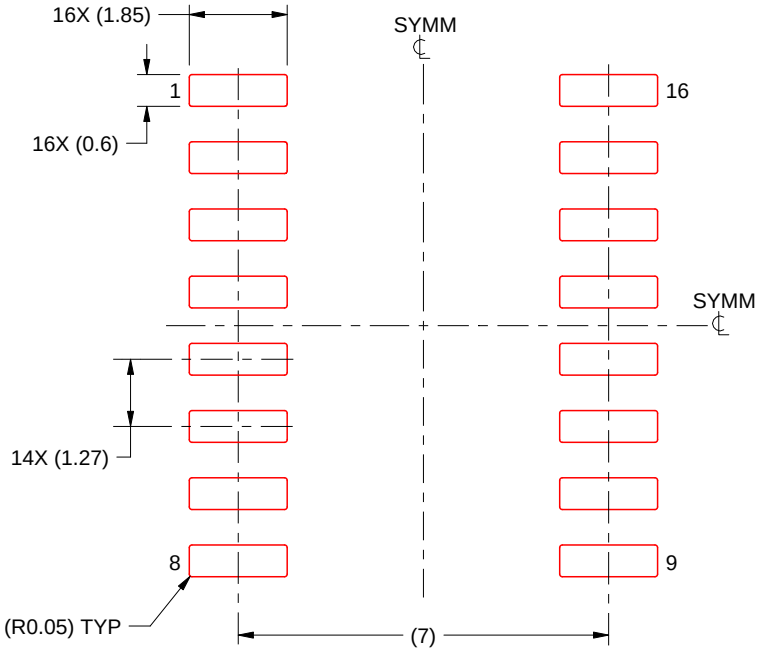

SOLDER PASTE EXAMPLE
BASED ON 0.125 mm THICK STENCIL
SCALE:7X

4220735/A 12/2021

NOTES: (continued)

7. Laser cutting apertures with trapezoidal walls and rounded corners may offer better paste release. IPC-7525 may have alternate design recommendations.
8. Board assembly site may have different recommendations for stencil design.

PW0016A

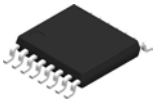

PACKAGE OUTLINE

TSSOP - 1.2 mm max height

SMALL OUTLINE PACKAGE

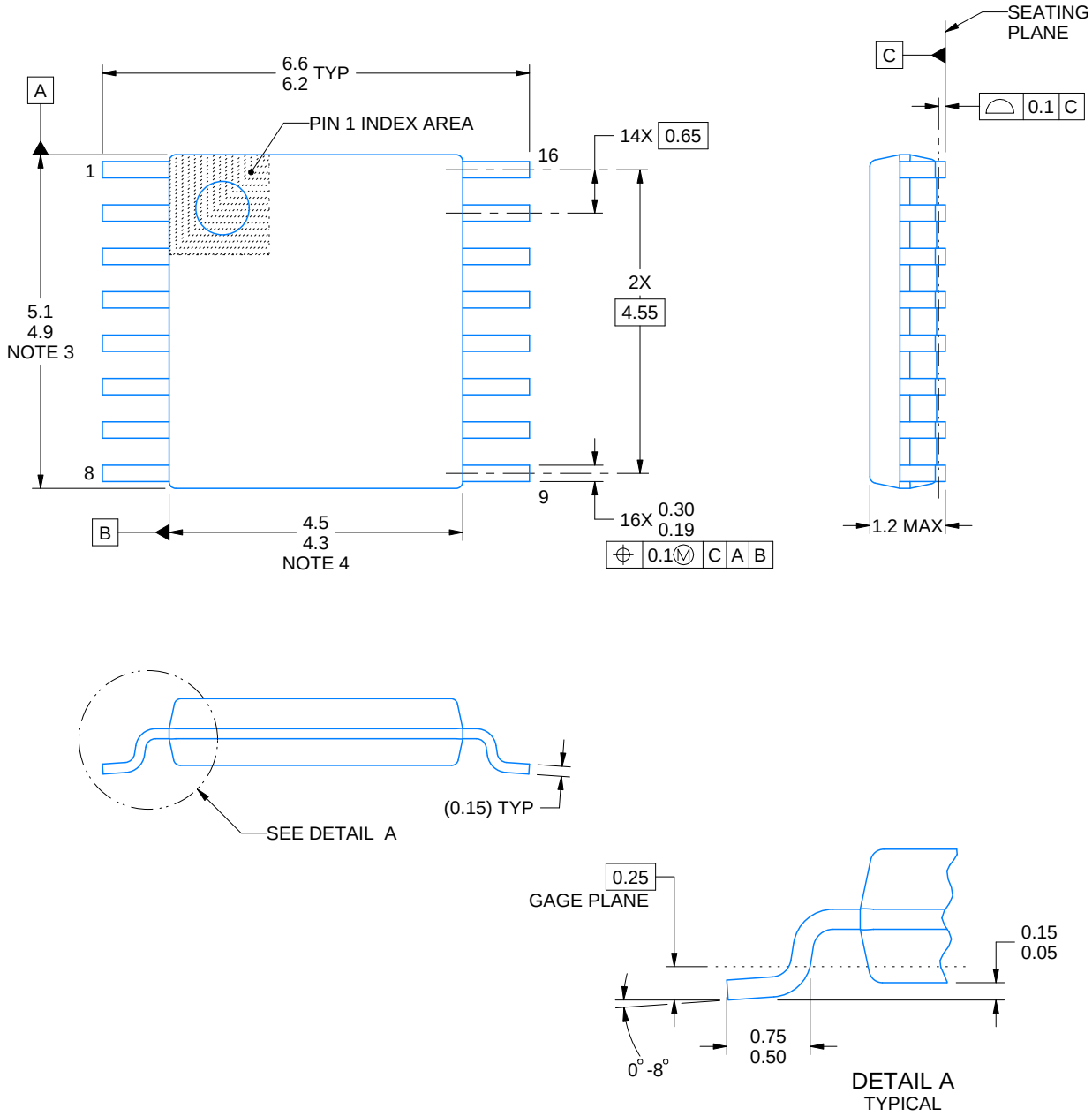

NOTES:

1. All linear dimensions are in millimeters. Any dimensions in parenthesis are for reference only. Dimensioning and tolerancing per ASME Y14.5M.
2. This drawing is subject to change without notice.
3. This dimension does not include mold flash, protrusions, or gate burrs. Mold flash, protrusions, or gate burrs shall not exceed 0.15 mm per side.
4. This dimension does not include interlead flash. Interlead flash shall not exceed 0.25 mm per side.
5. Reference JEDEC registration MO-153.

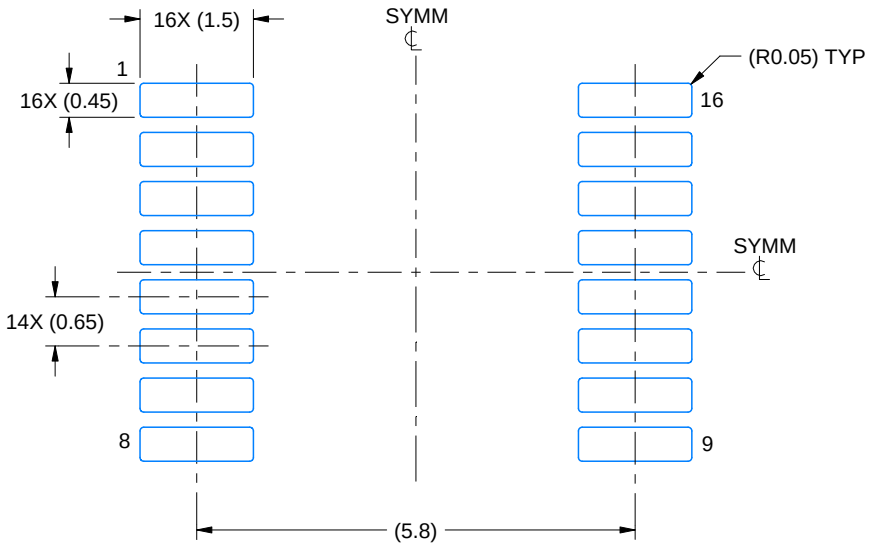

LAND PATTERN EXAMPLE
EXPOSED METAL SHOWN
SCALE: 10X

NON-SOLDER MASK DEFINED (PREFERRED)

SOLDER MASK DEFINED

SOLDER MASK DETAILS

4220204/A 02/2017

NOTES: (continued)

6. Publication IPC-7351 may have alternate designs.
7. Solder mask tolerances between and around signal pads can vary based on board fabrication site.

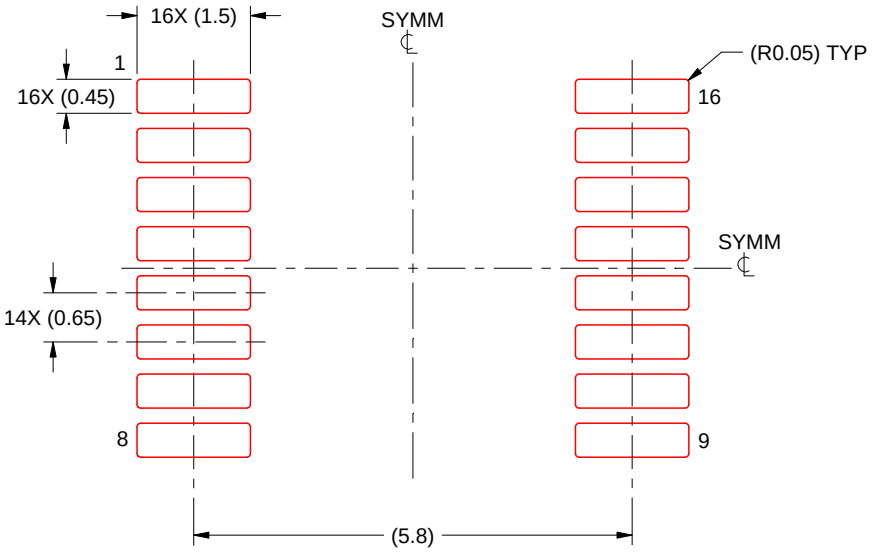

SOLDER PASTE EXAMPLE
BASED ON 0.125 mm THICK STENCIL
SCALE: 10X

4220204/A 02/2017

NOTES: (continued)

8. Laser cutting apertures with trapezoidal walls and rounded corners may offer better paste release. IPC-7525 may have alternate design recommendations.
9. Board assembly site may have different recommendations for stencil design.

MECHANICAL DATA

NS (R-PDSO-G)** **PLASTIC SMALL-OUTLINE PACKAGE**

14-PINS SHOWN

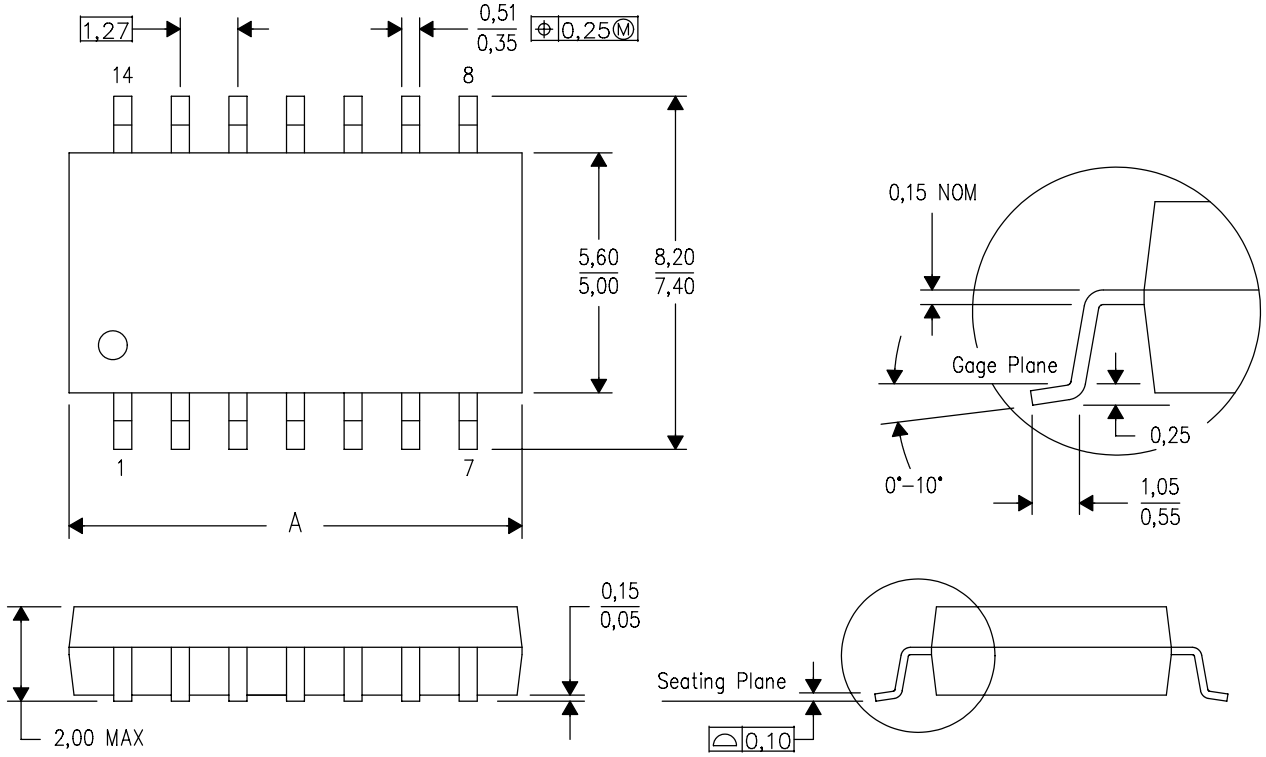

DIM \ PINS **	14	16	20	24
A MAX	10,50	10,50	12,90	15,30
A MIN	9,90	9,90	12,30	14,70

4040062/C 03/03

NOTES:
A. All linear dimensions are in millimeters.
B. This drawing is subject to change without notice.
C. Body dimensions do not include mold flash or protrusion, not to exceed 0,15.

RGY (R-PVQFN-N16) PLASTIC QUAD FLATPACK NO-LEAD

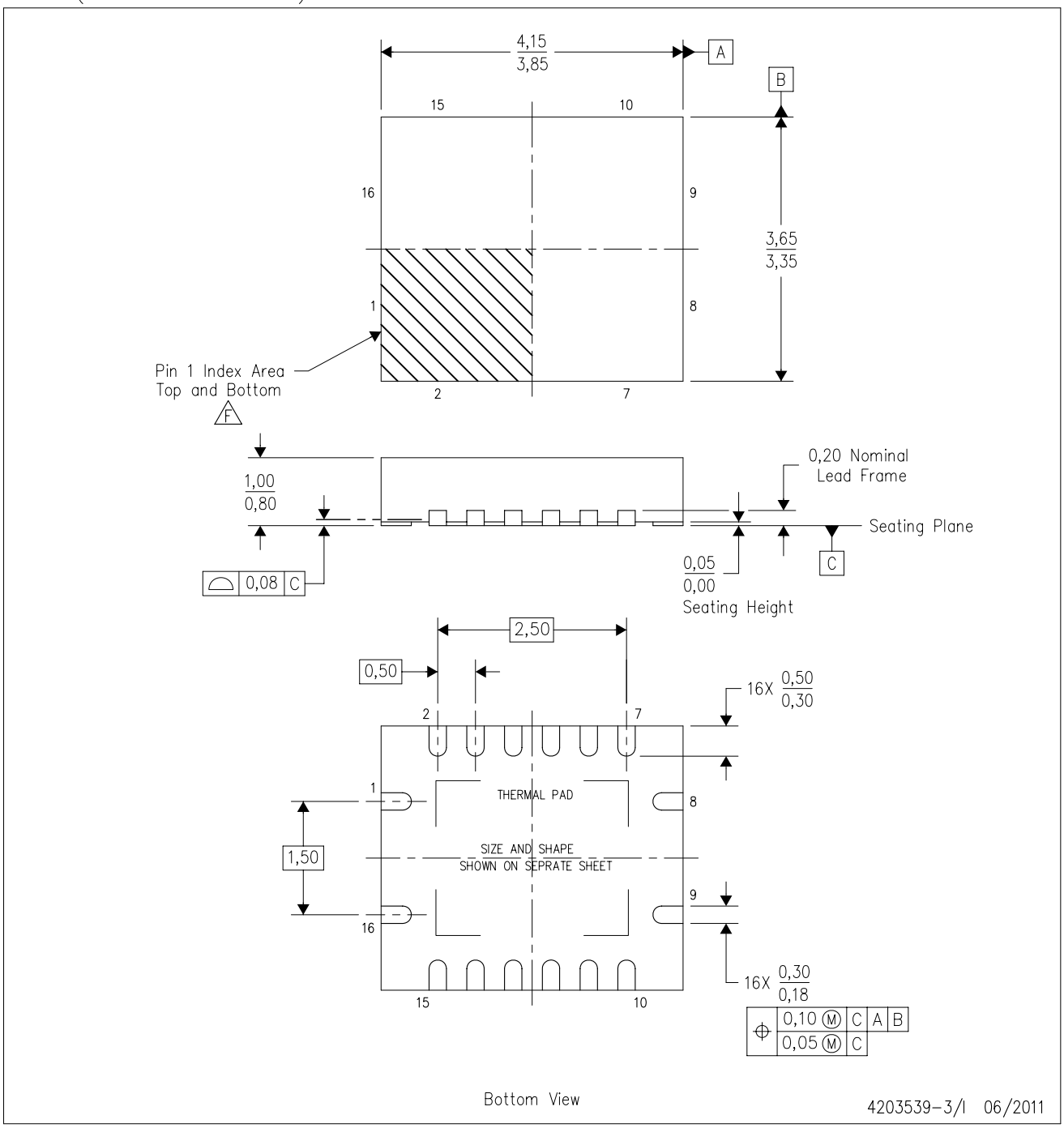

NOTES:
- A. All linear dimensions are in millimeters. Dimensioning and tolerancing per ASME Y14.5M-1994.
- B. This drawing is subject to change without notice.
- C. QFN (Quad Flatpack No-Lead) package configuration.
- D. The package thermal pad must be soldered to the board for thermal and mechanical performance.
- E. See the additional figure in the Product Data Sheet for details regarding the exposed thermal pad features and dimensions.
- F. Pin 1 identifiers are located on both top and bottom of the package and within the zone indicated. The Pin 1 identifiers are either a molded, marked, or metal feature.
- G. Package complies to JEDEC MO-241 variation BA.

RGY (R–PVQFN–N16) PLASTIC QUAD FLATPACK NO–LEAD

THERMAL INFORMATION

This package incorporates an exposed thermal pad that is designed to be attached directly to an external heatsink. The thermal pad must be soldered directly to the printed circuit board (PCB). After soldering, the PCB can be used as a heatsink. In addition, through the use of thermal vias, the thermal pad can be attached directly to the appropriate copper plane shown in the electrical schematic for the device, or alternatively, can be attached to a special heatsink structure designed into the PCB. This design optimizes the heat transfer from the integrated circuit (IC).

For information on the Quad Flatpack No–Lead (QFN) package and its advantages, refer to Application Report, QFN/SON PCB Attachment, Texas Instruments Literature No. SLUA271. This document is available at www.ti.com.

The exposed thermal pad dimensions for this package are shown in the following illustration.

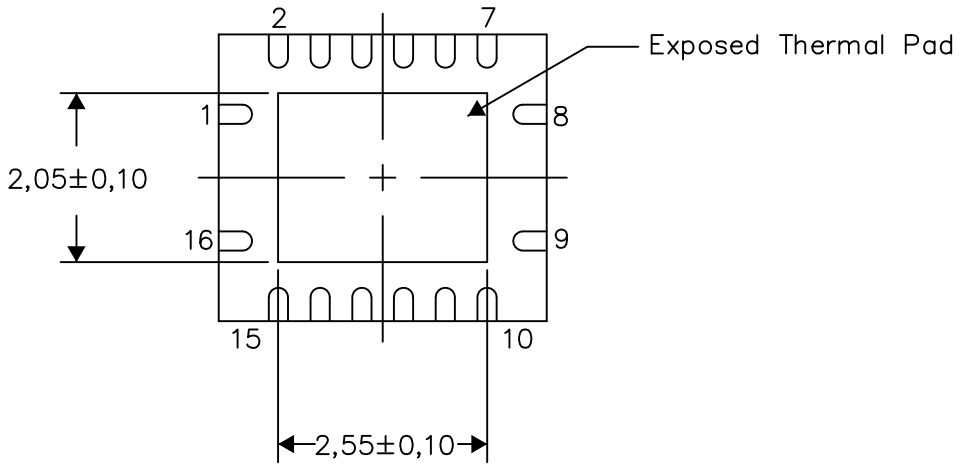

Bottom View

Exposed Thermal Pad Dimensions

4206353–3/P 03/14

NOTE: All linear dimensions are in millimeters

RGY (R–PVQFN–N16) PLASTIC QUAD FLATPACK NO–LEAD

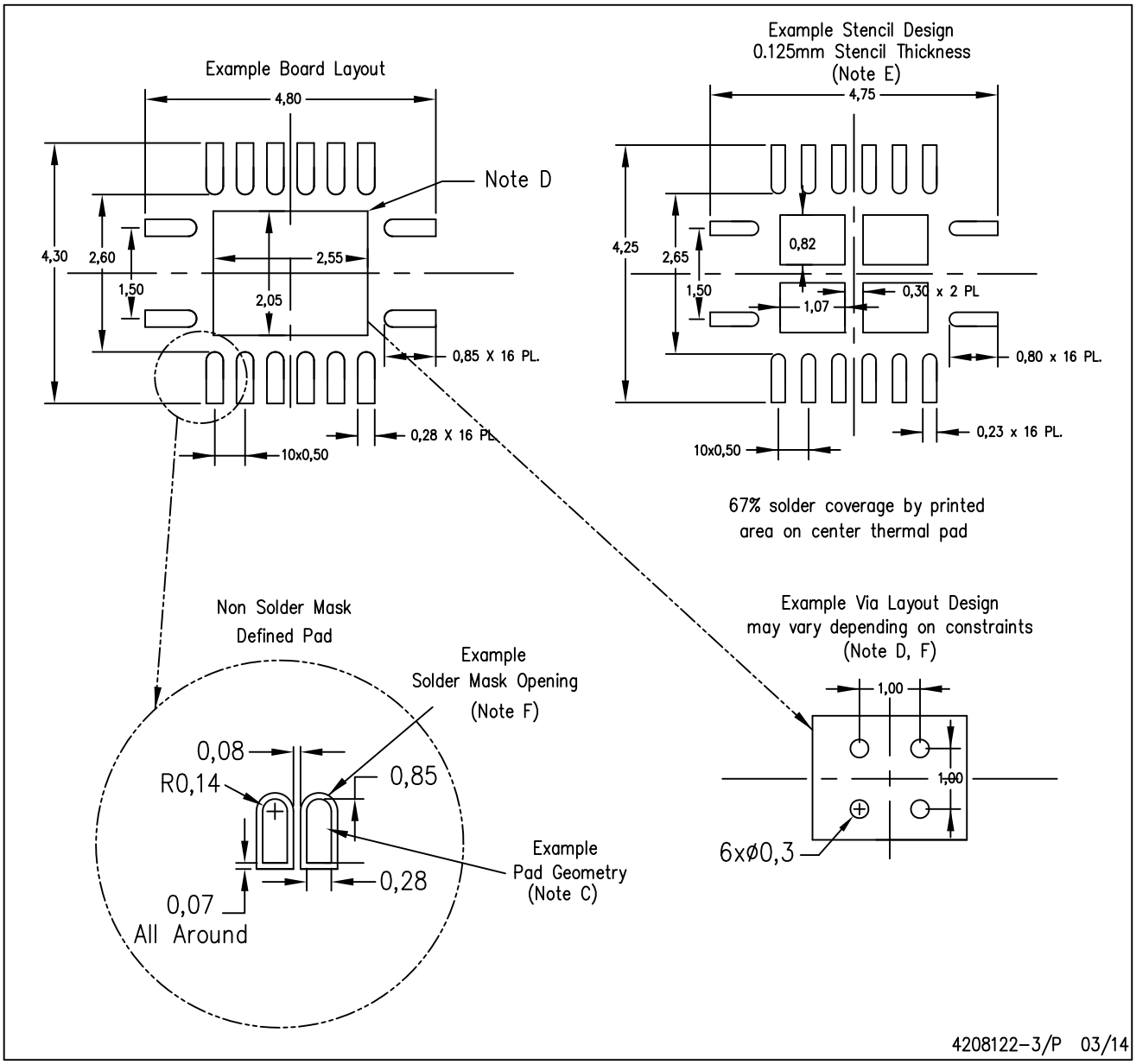

NOTES:
A. All linear dimensions are in millimeters.
B. This drawing is subject to change without notice.
C. Publication IPC–7351 is recommended for alternate designs.
D. This package is designed to be soldered to a thermal pad on the board. Refer to Application Note, Quad Flat–Pack QFN/SON PCB Attachment, Texas Instruments Literature No. SLUA271, and also the Product Data Sheets for specific thermal information, via requirements, and recommended board layout. These documents are available at www.ti.com <http://www.ti.com>.
E. Laser cutting apertures with trapezoidal walls and also rounding corners will offer better paste release. Customers should contact their board assembly site for stencil design recommendations. Refer to IPC 7525 for stencil design considerations.
F. Customers should contact their board fabrication site for minimum solder mask web tolerances between signal pads.

IMPORTANT NOTICE AND DISCLAIMER

TI PROVIDES TECHNICAL AND RELIABILITY DATA (INCLUDING DATA SHEETS), DESIGN RESOURCES (INCLUDING REFERENCE DESIGNS), APPLICATION OR OTHER DESIGN ADVICE, WEB TOOLS, SAFETY INFORMATION, AND OTHER RESOURCES “AS IS” AND WITH ALL FAULTS, AND DISCLAIMS ALL WARRANTIES, EXPRESS AND IMPLIED, INCLUDING WITHOUT LIMITATION ANY IMPLIED WARRANTIES OF MERCHANTABILITY, FITNESS FOR A PARTICULAR PURPOSE OR NON-INFRINGEMENT OF THIRD PARTY INTELLECTUAL PROPERTY RIGHTS.

These resources are intended for skilled developers designing with TI products. You are solely responsible for (1) selecting the appropriate TI products for your application, (2) designing, validating and testing your application, and (3) ensuring your application meets applicable standards, and any other safety, security, regulatory or other requirements.

These resources are subject to change without notice. TI grants you permission to use these resources only for development of an application that uses the TI products described in the resource. Other reproduction and display of these resources is prohibited. No license is granted to any other TI intellectual property right or to any third party intellectual property right. TI disclaims responsibility for, and you will fully indemnify TI and its representatives against, any claims, damages, costs, losses, and liabilities arising out of your use of these resources.

TI’s products are provided subject to TI’s Terms of Sale or other applicable terms available either on ti.com or provided in conjunction with such TI products. TI’s provision of these resources does not expand or otherwise alter TI’s applicable warranties or warranty disclaimers for TI products.

TI objects to and rejects any additional or different terms you may have proposed.

Mailing Address: Texas Instruments, Post Office Box 655303, Dallas, Texas 75265
Copyright © 2022, Texas Instruments Incorporated