TUSB422 具有供电功能的 USB Type-C™ 端口控制

1 特性

- 支持 USB Type-C™1.2 和电源供电 (PD) 规范
- 支持 I^2C 接口 (TCPCi) 的 USB PD 物理层
  - 5V 至 24V 拉灌电压
  - 2.5W VCONN 开关
  - 交替模式协商
- 针对支持 自主双角色端口 (DRP) 的 应用进行了优化
- 软件可配置为专用主机、专用器件或兼具两种角色
  - 下行数据端口 (DFP)、上行数据端口 (UFP) 和双角色端口 (DRP)
  - 连接/断开 USB 端口
  - 电缆方向检测
  - 电流模式通告与检测
  - 调试和音频附件支持
  - 有源电缆检测
  - 为有源电缆提供 VCONN
- 支持电量耗尽的电池
- 集成过热检测二极管 (OTSD)
- VBUS 检测与放电控制
- 电源电压：2.7V 至 5.5V
- 低电流消耗
- -40°C 至 85°C 的工业温度范围

2 应用

- 智能手机
- 平板电脑、笔记本电脑、台式机
- 墙式充电器、移动电源

3 说明

TUSB422 是一款 USB PD PHY，可在 USB Type-C 端口中实现 USB Type-C 生态系统所需的配置通道 (CC) 逻辑。该器件集成 USB 双相标记编码 (BMC) 供电 (PD) 协议的物理层，允许使用功率高达 100W 的电源并支持备用模式接口。具备 USB Type-C 端口管理器 (TCPM) 的外部处理器通过 I^2C 接口与 TUSB422 进行通信。

在 TCPM 的控制下，TUSB322 使用 CC 引脚确定端口连接状态、电缆方向并进行角色检测和 USB Type-C 电流模式控制。TUSB422 可根据应用配置为 DFP、UFP 或 DRP。TUSB422 应用 VBUS 检测和放电功能，从而实现兼容性 USB Type-C 端口。

TUSB422 集成 2.5W 开关，可为有源电缆提供 VCONN 电源。该器件还提供 VCONN 放电功能。TUSB422 还支持 USB Type-C 可选 功能， 例如音频和调试附件。

该器件能够在宽电源范围内工作，功耗较低。TUSB422 可在工业级温度范围内运行。

器件信息(1)

器件型号	封装	封装尺寸（标称值）
TUSB422	WCSP (9)	1.335mm x 1.380mm，间距为 0.4mm

(1) 要了解所有可用封装，请见数据表末尾的可订购产品附录。

简化电路原理图

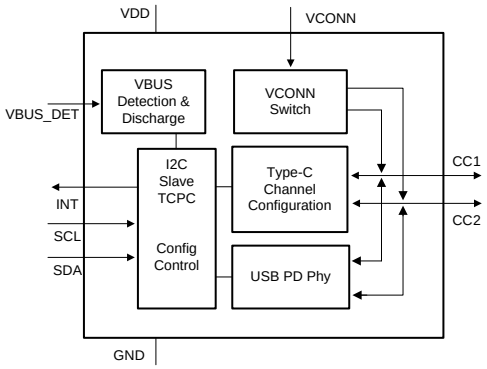

USB Type-C 智能手机

An IMPORTANT NOTICE at the end of this data sheet addresses availability, warranty, changes, use in safety-critical applications, intellectual property matters and other important disclaimers. PRODUCTION DATA.

目录

1 特性 ... 1
2 应用 ... 1
3 说明 ... 1
4 修订历史记录 ... 2
5 **Pin Configuration and Functions** ... 3
6 **Specifications** ... 4
6.1 Absolute Maximum Ratings ... 4
6.2 ESD Ratings ... 4
6.3 Recommended Operating Conditions ... 4
6.4 Thermal Information ... 5
6.5 Electrical Characteristics ... 5
6.6 Timing Requirements ... 8
6.7 Typical Characteristics ... 10
7 **Detailed Description** ... 11
7.1 Overview ... 11
7.2 Functional Block Diagram ... 11
7.3 Feature Description ... 12
7.4 Device Functional Modes ... 17
7.5 Programming ... 19
7.6 Register Maps ... 22
8 **Application and Implementation** ... 63
8.1 Application Information ... 63
8.2 Typical Application ... 63
9 **Power Supply Recommendations** ... 65
10 **Layout** ... 66
10.1 Layout Guidelines ... 66
10.2 Layout Example ... 66
11 器件和文档支持 ... 67
11.1 接收文档更新通知 ... 67
11.2 社区资源 ... 67
11.3 商标 ... 67
11.4 静电放电警告 ... 67
11.5 术语表 ... 67
12 机械、封装和可订购信息 ... 68

4 修订历史记录

Changes from Revision B (August 2017) to Revision C — **Page**

- Changed the VCONN pin description in the *Pin Functions* table ... 3
- Deleted $V_{RX(FRS_PD)}$ from electrical characteristics ... 6
- Deleted $t_{FRSWAPRX}$ from timing requirements section ... 8
- Added NOTE: "The TUSB422 supports all PD2.0 and PD 3.0..." to the *USB PD BMC PHY* section ... 12
- Deleted text from the first paragraph of the *Fast Role Swap* secton. ... 16
- From: Once VBUS is at VSafe0V, change .. To: Once VBUS is at VSafe0V, disable AUTO_DISCHARGE_DISCONNECT in Power Control Register and change 17
- From: Once VBUS is at vSafe5V, the TCPM should then send PS_RDY to its port partner. To: Once VBUS is at vSafe5V, the TCPM should update message header information and then send PS_RDY to its port partner. ... 17
- Added NOTE: "During Power-role swap, the TUSB422..." to the *Power Role Swap* section. ... 18
- Added NOTE: "When exiting dead battery mode..." to the *Dead Battery Mode* section. ... 18
- Changed bit 0 From: VCONN_OC_FAULT To Reserved in 图 31 and 表 28 ... 37
- Added text: "VBUS present status may be invalid..." to the Bit 2 VBUS_PRESENT description in 表 31 ... 40
- Added text: "Before attempting to transmit..." to the *Transmit Register (address = 0x50) [reset = 0x00]* register ... 51
- Changed bit 0 From: FAST_ROLE_SWAP_STAT To Reserved in 图 65 and 表 62 ... 56
- Changed bit 0 From: FAST_ROLE_SWAP_MASK To Reserved in 图 66 and 表 63 ... 57
- Changed bit 3 From: FASTROLE_RX_EN To Reserved in 图 69 and 表 66 ... 59

Changes from Revision A (April 2017) to Revision B — **Page**

- Changed Bit TX_BUFF_OBJx_BYTE_x From: Read Only To Read/Wright in 图 54 and 表 51 ... 52

Changes from Original (November 2016) to Revision A — **Page**

- Deleted text: "Following sentence optional..." from the *ESD Ratings* table notes ... 4

Copyright © 2016–2018, Texas Instruments Incorporated

5 Pin Configuration and Functions

YFF Package
9 Pin (DSBGA)
Top View

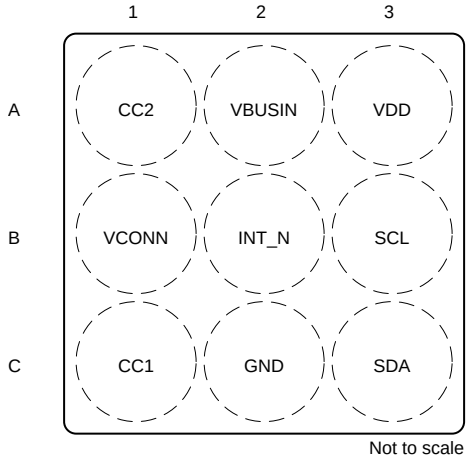

Pin Functions

PIN		I/O	DESCRIPTION
NO.	NAME		
A1	CC2	I/O (FS)	Type-C Configuration channel signal 2. Used for connector orientation, connection detection and removal, current capabilities, and PD communication. This pin requires an external $C_{RX(SHUNT)}$ capacitor.
A2	VBUSIN	I	5-24 V VBUS input voltage. Tie directly to VBUS at Type-C connector.
A3	VDD	P	2.7 V to 5.5 V Positive supply voltage
B1	VCONN	P	2.7 V to 5.5 V VCONN. VCONN voltage should be at a valid stable value before software closes the VCONN switch. If VCONN support is not required in the system, then this pin can be left floating.
B2	INT_N	O (FS)	Open drain output. Asserted low to indicate status change occurred. Requires an external pull-up resistor.
B3	SCL	I/O Open-drain (FS)	SCL - I2C communication clock signal. Requires an external pull-up resistor.
C1	CC1	I/O (FS)	Type-C Configuration channel signal 1. Used for connector orientation, connection detection and removal, current capabilities, and PD communication. This pin requires an external $C_{RX(SHUNT)}$ capacitor.
C2	GND	G	Ground
C3	SDA	I/O Open-drain (FS)	SDA - I2C communication data signal. Requires an external pull-up resistor.

Copyright © 2016–2018, Texas Instruments Incorporated

6 Specifications

6.1 Absolute Maximum Ratings

over operating free-air temperature range (unless otherwise noted)[1]

		MIN	MAX	UNIT
Supply Voltage	V_{DD}	-0.3	6	V
VCONN Switch voltage	VCONN	-0.3	6	V
Control pins	INT_N, SDA, SCL	-0.3	6	V
	CC1, CC2	-0.3	6	V
	VBUSIN	-0.3	26	V
Storage temperature, T_{stg}		-65	150	°C

(1) Stresses beyond those listed under Absolute Maximum Ratings may cause permanent damage to the device. These are stress ratings only, which do not imply functional operation of the device at these or any other conditions beyond those indicated under Recommended Operating Conditions. Exposure to absolute-maximum-rated conditions for extended periods may affect device reliability.

6.2 ESD Ratings

		VALUE	UNIT
$V_{(ESD)}$ Electrostatic discharge	Human body model (HBM), per ANSI/ESDA/JEDEC JS-001, all pins[1]	±1500	V
	Charged device model (CDM), per JEDEC specification JESD22-C101, all pins[2]	±1500	

(1) JEDEC document JEP155 states that 500-V HBM allows safe manufacturing with a standard ESD control process.
(2) JEDEC document JEP157 states that 250-V CDM allows safe manufacturing with a standard ESD control process.

6.3 Recommended Operating Conditions

over operating free-air temperature range (unless otherwise noted)

		MIN	NOM	MAX	UNIT
V_{DD}	Supply voltage range	2.7	3.7	5.5	V
VCONN	VCONN voltage range	2.7	5	5.5	V
VBUSIN	System VBUS voltage	0	5	24	V
V_{I2C_SYS}	System I2C voltage range that SDA and SCL are pulled up to	1.65	1.8	3.6	V
T_A	Operating Free air temperature with VCONN not supported in the system	-40	25	105	°C
	Operating Free air temperature with VCONN supported in the system	-40	25	85	°C
T_J	Junction temperature	-40		125	°C

版权 © 2016–2018, Texas Instruments Incorporated

6.4 Thermal Information

THERMAL METRIC[1]		TUSB422 YFF (DSBGA) 9 PINS	UNIT
$R_{\Theta JA}$	Junction-to-ambient thermal resistance	114.3	°C/W
$R_{\Theta JC(top)}$	Junction-to-case (top) thermal resistance	0.7	°C/W
$R_{\Theta JB}$	Junction-to-board thermal resistance	24.9	°C/W
Ψ_{JT}	Junction-to-top characterization parameter	0.3	°C/W
Ψ_{JB}	Junction-to-board characterization parameter	24.9	°C/W
$R_{\Theta JC(bot)}$	Junction-to-case (bottom) thermal resistance	NA	°C/W

(1) For more information about traditional and new thermal metrics, see the Semiconductor and IC Package Thermal Metrics application report, SPRA953.

6.5 Electrical Characteristics

over operating free-air temperature range (unless otherwise noted)

PARAMETER		TEST CONDITIONS	MIN	TYP	MAX	UNIT
Power Consumption						
$I_{(UNATTACHED_UFP)}$	UFP Current consumption in Unattached.SNK when port is unconnected and waiting for connection	VDD = 3.7V		10		µA
$I_{(UNATTACHED_DRP)}$	DRP Current consumption while toggling between Unattached.SNK and Unattached.SRC when port is unconnected and waiting for connection.	VDD = 3.7V		12		µA
$I_{(UNATTACHED_DFP)}$	DFP Current consumption in Unattached.SRC when port is unconnected and waiting for connection	VDD = 3.7V		11		µA
$I_{(ACTIVE_UFP)}$	UFP Current consumption in attached.SNK Active Mode. PD Disabled.	VDD = 3.7V		330		µA
$I_{(ACTIVE_UFP_PD)}$	UFP current consumption in attached.SNK with PD enabled and transmitting continuous BIST Carrier Mode 2.	VDD = 3.7V; TX_CARRIER_MODE2_SEL = 1;		5.2		mA
CC pins (CC1 and CC2)						
$V_{CC(USB_DB)}$	Voltage on both CC pins when in dead battery and the attached DFP is presenting default current advertisement	VDD = 0V	0.25		1.5	V
$V_{CC(MED_DB)}$	Voltage on both CC pins when in dead battery and the attached DFP is presenting medium current (1.5A) advertisement	VDD = 0V	0.45		1.5	V
$V_{CC(HIGH_DB)}$	Voltage on both CC pins when in dead battery and the attached DFP is presenting high current (3.0A) advertisement	VDD = 0V	0.88		2.18	V
$R_{(CC_RD)}$	Pull-down resistor when in UFP or DRP mode	VDD = 2.7V to 5.5V	4.6	5.1	5.6	kΩ
$R_{(CC_RA)}$	Pull-down resistor for active cable	VDD = 2.7V to 5.5V	0.8	1	1.2	kΩ
$I_{CC(LKG)}$	Leakage current through CC pins	VDD = 0V; VCONN = 0V; CC pin = 5.5V			1.36	mA
$V_{(UFP_CC_USB)}$	Voltage level range for detecting a DFP attach when configured as a UFP and DFP is advertising default current source capability		0.25		0.61	V

Copyright © 2016–2018, Texas Instruments Incorporated

Electrical Characteristics (continued)

over operating free-air temperature range (unless otherwise noted)

PARAMETER		TEST CONDITIONS	MIN	TYP	MAX	UNIT
$V_{(UFP_CC_MED)}$	Voltage level range for detecting a DFP attach when configured as a UFP and DFP is advertising medium (1.5A) current source capability		0.7		1.16	V
$V_{(UFP_CC_HIGH)}$	Voltage level range for detecting a DFP attach when configured as a UFP and DFP is advertising high (3.0A) current source capability		1.31		2.04	V
$V_{TH(DFP_CC_USB)}$	Voltage threshold for detecting a UFP attach when TUSB422 is advertising default current source capability.		1.51	1.6	1.64	V
$V_{TH(DFP_CC_MED)}$	Voltage threshold for detecting a UFP attach when TUSB422 is advertising medium current (1.5A) source capability.		1.51	1.6	1.64	V
$V_{TH(DFP_CC_HIGH)}$	Voltage threshold for detecting a UFP attach when TUSB422 is advertising high current (3.0A) source capability.		2.46	2.6	2.74	V
$V_{TH(AC_CC_USB)}$	Voltage threshold for detecting a active cable attach when advertising default current		0.15	0.2	0.25	V
$V_{TH(AC_CC_MED)}$	Voltage threshold for detecting a active cable attach when advertising medium current		0.35	0.4	0.45	V
$V_{TH(AC_CC_HIGH)}$	Voltage threshold for detecting a active cable attach when advertising high current.		0.76	0.8	0.84	V
$I_{CC(DEFAULT_P)}$	Default mode pull-up current source when advertising default current.		64	80	96	µA
$I_{CC(MED_P)}$	Medium (1.5A) mode pull-up current source when advertising medium current.		166	180	194	µA
$I_{CC(HIGH_P)}$	High (3.0A) mode pull-up current source when advertising high current.	VDD > 3.0V	304	330	356	µA
$R_{TX(PD)}$	Output impedance of CC1/CC2 during TX when operating in PD mode and driving the CC line.	At 750KHz	33	48	75	Ω
$R_{TX(FRS_PD)}$	Fast Role Swap request transmit driver resistance (excluding cable resistance)				5	Ω
$V_{OH(PD)}$	Transmit high voltage when operating in PD mode		1.05	1.125	1.2	V
$V_{OL(PD)}$	Transmit low voltage when operating in PD mode.				0.07	V
$R_{RX(PD)}$	Receiver input impedance. Does Not include pull-up or pulldown resistance from cable detect.	TX is Hi-Z	1			MΩ
$V_{IH(PD_SRC)}$	Input high voltage when sourcing power. Selected when POWER_ROLE = 1.		0.8925		1.5325	V
$V_{IH(PD_SNK)}$	Input high voltage when sinking power. Selected when POWER_ROLE = 0.		0.6425		1.5325	V
$V_{IL(PD_SRC)}$	Input low voltage when sourcing power. Selected when POWER_ROLE = 1.		-0.3325		0.4825	V
$V_{IL(PD_SNK)}$	Input low voltage when sinking power. Selected when POWER_ROLE = 0.		-0.3325		0.2325	V

Copyright © 2016–2018, Texas Instruments Incorporated

Electrical Characteristics (continued)

over operating free-air temperature range (unless otherwise noted)

PARAMETER		TEST CONDITIONS	MIN	TYP	MAX	UNIT
$C_{RX(SHUNT)}$	External shunt capacitance on both CC1 and CC2.		200		450	pF
Control pins: INT_N						
$I_{(INTN_LEAK)}$	INT_N leakage	VDD = 0V; 0 < INT_N < 3.3V	-1		1	µA
V_{OL}	Low-level signal output voltage	IOL = -2mA			0.4	V
I2C (SDA and SCL). VDD must be above 3V to operate at 3.3V I2C levels						
$V_{IH(I2C)}$	High-level input signal voltage		1.2			V
$V_{IL(I2C)}$	Low-level input signal voltage				0.4	V
$V_{OL(I2C)}$	Low-level signal output voltage (open-drain)				0.4	V
$I_{OL(I2C)}$	Low level output current		6			mA
$I_{(I2C_LKG)}$	Leakage through SDA and SCL pins	VDD = 0V; pin pulled up to 3.6V	-1		1	µA
$C_{(I2C)}$	Capacitance for SDA and SCL pins				10	pF
$C_{(I2C_FM+_BUS)}$	I2C bus capacitance for FM+ (1MHz)				150	pF
$C_{(I2C_FM_BUS)}$	I2C bus capacitance for FM (400KHz)				150	pF
$R_{(EXT_I2C_FM+)}$	External resistors on both SDA and SCL when operating at FM+ (1MHz)	$C_{(I2C_FM+_BUS)}$ = 150pF	620	820	910	Ω
$R_{(EXT_I2C_FM)}$	External resistors on both SDA and SCL when operating at FM (400KHz)	$C_{(I2C_FM_BUS)}$ = 150pF	620	1500	2200	Ω
VCONN						
$R_{DS(ON)}$	ON resistance of the VCONN power FET.			0.4	0.75	Ω
$V_{(PASS)}$	Voltage to pass through VCONN power FET				5	V
$I_{(VCONN)}$	VCONN current limit; VCONN is disconnected above this voltage.		500	650	850	mA
$V_{(VCONN_PRES)}$	Threshold for detecting Vconn present.		2		2.4	V
$C_{(VCONN)}$	Bulk capacitance on VCONN; Placed on VCONN pin supply		10		200	µF
$R_{(VCONN_DIS)}$	Resistance to GND when Vconn discharge is enabled		4.6	5.1	5.6	KΩ
VBUSIN						
$C_{(BULK_SRC)}$	Source External bulk capacitance when operating as VBUS Source.		10		150	µF
$C_{(SNK)}$	Sink External bulk capacitance on VBUS at connector		1		10	µF
$C_{(SNKPD)}$	Sink External bulk capacitance on VBUS after success PD negotiation		1		100	µF
$R_{(BLEED)}$	Resistance to gnd when bleed discharge is enabled		8	10	12.5	KΩ
$V_{(SRCSLEWNEG)}$	VBUS discharge maximum slew rate				-30	mV/µs
$V_{(VBUS_MEASURE_ACC)}$	VBUS_VOLTAGE register measurement accuracy		-2		2	%
OTSD						
$T_{(OTSD1)}$	TJ over temperature trip threshold resulting in VCONN turn off and flag set.			150		°C

6.6 Timing Requirements

			MIN	NOM	MAX	UNIT
CC pins in PD mode						
F_{br_PD}	Bit Rate		270	300	330	Kbps
t_{UI_PD}	Unit Interval		3.03	3.3	3.7	µs
t_{RISE_PD}	Rise time	10% to 90%; $C_{RX(SHUNT)}$ = 200pF	300			ns
t_{FALL_PD}	Fall time	90% to 10%; $C_{RX(SHUNT)}$ = 200pF	300			ns
$t_{RxFilter}$	Rx Bandwidth limiting filter		100			ns
$t_{InterFrameCap}$	Time from the end of last bit of a frame until the state of the first bit of the next pre-amble		25		50	µs
$t_{StartDrive}$	Time before the start of the first bit of the preamble when the transmitter shall start driving the line.		-1		1	µs
$t_{EndDriveBMC}$	Time to cease driving the line after the end of the last bit of a frame				23	µs
$t_{HoldLowBMC}$	Time to cease driving the line after the final high-to-low transition		1		23	µs
nTransitionCount	Transitions for signal detect	Number of transitions to be detected to declare bus non-idle	3			
$t_{FRSWAPTX}$	Fast Role Swap request transmit duration		60		120	µs
I2C (SDA and SCL)						
f_{SCL}	SCL clock frequency		0.001		1	MHz
$t_{HD;STA}$	Hold time (repeated) start condition		0.26			µs
t_{LOW}	Low period of SCL		0.5			µs
t_{HIGH}	High period of SCL		0.26			µs
$t_{SU;STA}$	Setup time for a repeated start condition		0.26			µs
$t_{HD;DAT}$	Data Hold Time		0			µs
$t_{SU;DAT}$	Data setup time		50			µs
$t_{SU;STOP}$	Setup time for STOP condition		0.26			µs
t_{BUF}	Bus free time between STOP and START condition		0.5			µs
$t_{VD;DAT}$	Data valid time				0.45	µs
$t_{VD;ACK}$	Data valid acknowledge time				0.45	µs
t_{R_I2C}	Rise time of both SDA and SCL	30% to 70%			120	ns
t_{F_I2C}	Fall time of both SDA and SCL	70% to 30%	14		120	ns
VCONN Fault						
$t_{VCONN_FAULT_DLY}$	Delay from Vconn fault detected to Vconn fault status flag set				20	µs
t_{VCONN_OPEN}	Delay from Vconn fault detected to Vconn switch opened				50	ns
Power-Up Requirements						
$t_{INT_N_LOW}$	Time from VDD (min) to TUSB422 asserts INT_N low.	Measured from VDD(min) to INT_N pin at VOL(min).			4	ms
t_{VDD_RISE}	VDD rise time	Measured from 0V to VDD(min)			40	ms
Sampling timings						
$t_{CC_SAMPLE_RATE}$	Delay from Vconn fault detected to Vconn fault status flag set	CC_SAMPLE_RATE = 2'b01		2		ms
$t_{VBUSINRATE}$	The sampling interval of VBUS Voltage	CC_SAMPLE_RATE = 2'b01			2.2	ms

Copyright © 2016–2018, Texas Instruments Incorporated

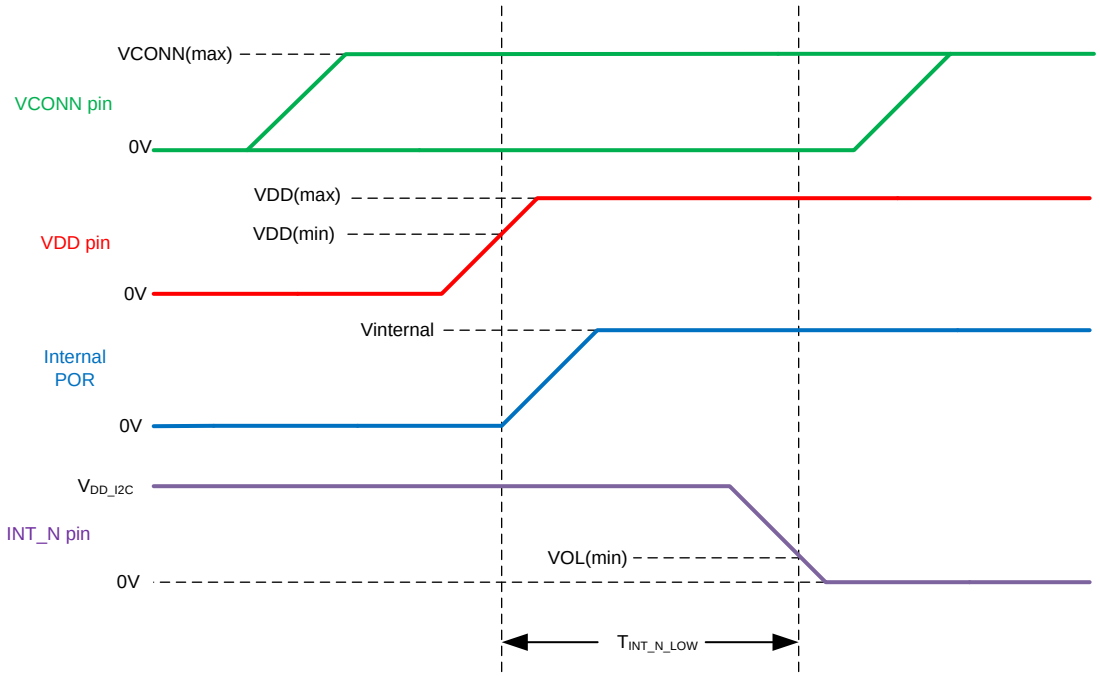

图 1. Power-Up Timing

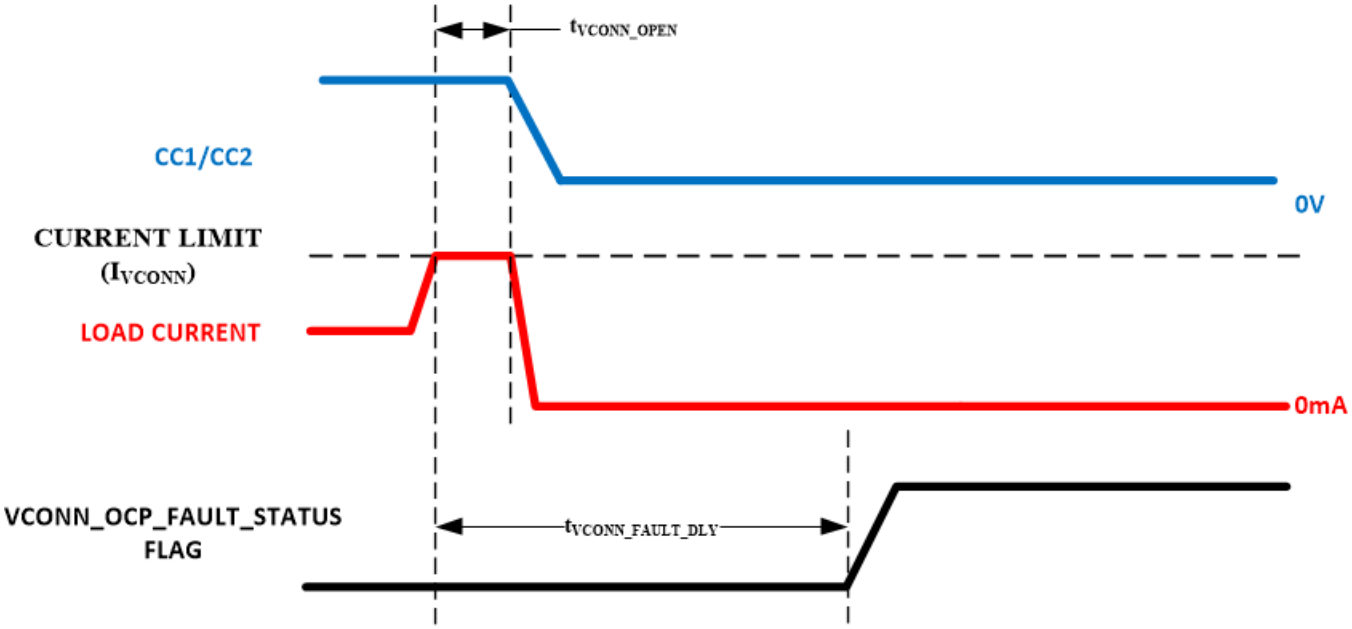

图 2. VCONN Fault Timing

6.7 Typical Characteristics

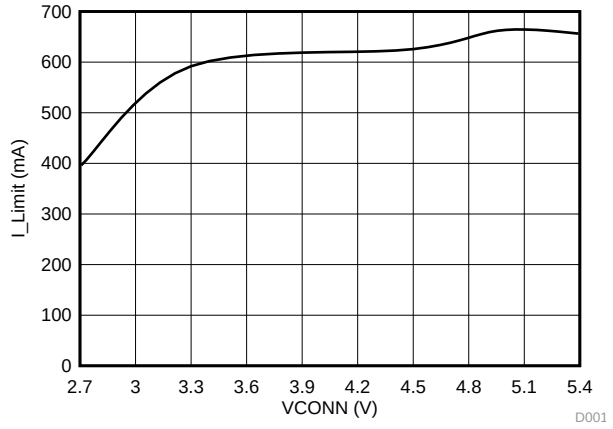

图 3. VCONN Voltage vs Current Limit

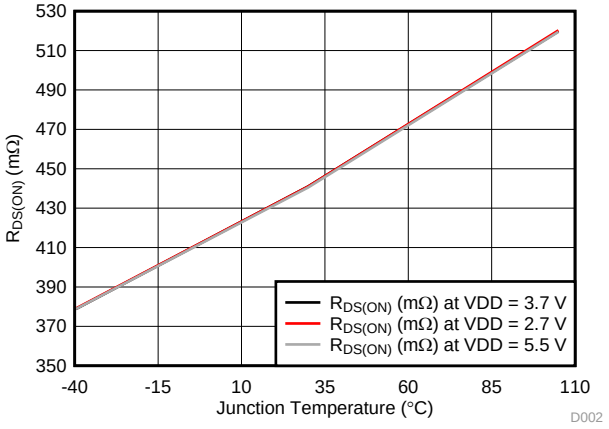

图 4. VCONN $R_{DS(ON)}$ vs Junction Temperature

版权 © 2016–2018, Texas Instruments Incorporated

7 Detailed Description

7.1 Overview

The USB Type-C ecosystem operates around a small form factor connector and cable that is flippable and reversible. Due to the nature of the connector, a scheme is needed to determine the connector orientation. Additional schemes are needed to determine when a USB port is attached, determine the acting role of the USB port (Source, Sink, active cable, audio accessory, debug accessory), and communicate Type-C current capabilities. These schemes are implemented over the CC pins according to the *USB Type-C Specification 1.2*. The TUSB422 provides Configuration Channel (CC) logic for determining USB port attach and detach, role detection, cable orientation, and Type-C Current detection/advertisement. The TUSB422 also contains several features such as VCONN sourcing, VBUS enable, VBUS discharge enable, detection of vSafe0V, and low standby current.

The TUSB422 provides a USB Type-C Port Controller Interface (TCPCi) allowing the USB Type-C Port Manager (TCPM) residing in an external microprocessor the ability to determine when a port partner is attached or removed, cable orientation, enable or remove power to the Type-C port. The TUSB422 implements a USB PD BMC physical layer and protocol layer for communication over the Type-C port for purposes like power negotiations, alternate mode enablement (ie DisplayPort over Type-C), and data role negotiations just to mention a few. The TUSB422 takes a message provided by external processor, calculate and append a 32-bit CRC, encode, and transmit the encoded message over the CC wire in the cable. The TUSB422 also receives data from the CC wire and determined if packet is valid or not, respond with GoodCRC, and notify external processor of its arrival by asserting the interrupt (INT_N).

7.2 Functional Block Diagram

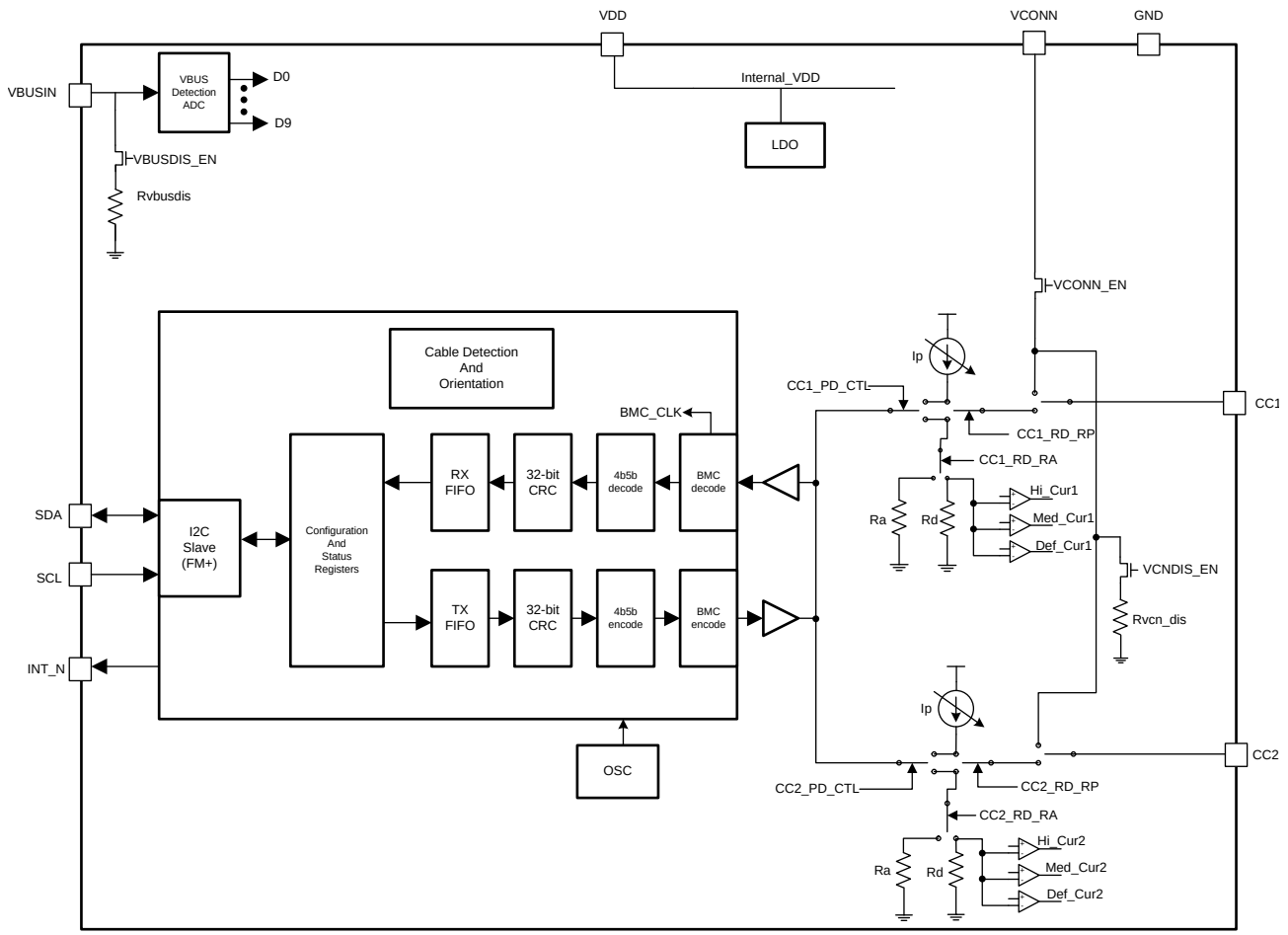

Functional Block Diagram (接下页)

7.2.1 Cables, Adapters, and Direct Connect Devices

Type-C Specification 1.2 defines several cables, plugs and receptacles to be used to attach ports. TUSB422 supports all cables, receptacles, and plugs.

7.2.1.1 USB Type-C receptacles and Plugs

- USB Type-C receptacle for USB2.0 and USB3.1 and full-featured platforms and devices
- USB Full-Featured Type-C plug
- USB2.0 Type-C Plug

7.2.1.2 USB Type-C Cables

- USB Full-featured Type-C cable with USB3.1 full featured plug
- USB2.0 Type-C cable with USB2.0 plug
- Captive cable with either a USB Full featured plug or USB2.0 plug

7.2.1.3 Direct Connect Devices

TUSB422 supports the attaching and detaching of a direct connect device such as a cradle dock or captive cable.

7.3 Feature Description

7.3.1 USB PD I2C Type-C Port Controller Interface (TCPC)

The TUSB422 provides up to 1Mbps I2C USB Type-C Port Controller Interface (TCPC) interface and register set allowing for control by external processor. The TUSB422 implements the following optional TCPC features.

- Up to 24 V VBUS Measurement and Alarms
- Default, 1.5 A, and 3 A Source Resistor (Rp) advertisement
- Source VCONN
- VCONN overcurrent fault detection

7.3.2 USB PD BMC PHY

The TUSB422 contains a USB Power Delivery BMC (Bi-phase Mark coded) Baseband phy. The TCPM can enable the TUSB422's USB PD BMC phy for any of the following conditions when the TUSB422 is in Attached.SNK, Attach.SRC, DebugAccessory, or PoweredAccessory state:

- *Receiver Detect Register* is non-zero

The USB PD phy will always be disabled when the TUSB422 is in the unattached mode.

The TUSB422 PD BMC phy receiver threshold will be set based on the value of the POWER_ROLE field in the *Message Header Info* register. The default receiver threshold can be changed by setting the VIX_PD and VIX_PD_OVERRIDE fields in the *PHY BMC RX Control* register.

注

The TUSB422 supports all PD2.0 and PD 3.0 messages except for the PD 3.0 Get Source Capabilities Extended Message. Upon receipt of this message, GoodCRC is not returned, and no Rx alert flag is set. The side effect is that the port partner will retry the message. After the retries are exhausted, the port partner will send a soft reset message.

表 1. Power Role

POWER-ROLE	V_{IH}	V_{IL}
0	$V_{IH(PD_SRC)}$	$V_{IL(PD_SRC)}$
1	$V_{IH(PD_SNK)}$	$V_{IL(PD_SNK)}$

版权 © 2016–2018, Texas Instruments Incorporated

7.3.3 DFP (Downstream Facing Port)

The TUSB422 can be used in applications in which USB devices are connected too. For example, in a desktop application the Type-C port(s) must be able to determine when a device is attached and enable both power (in the form of VBUS) and datapath (either USB data and/or Alternate Mode data like DisplayPort) to attached device. The TUSB422 can be used in a DFP application by programming the *Role Control* register to 0x05. This presents Rp on both of TUSB422 CC pins. When configured as a DFP, the TUSB422 can be used to control the sourcing of VCONN. Control of VBUS source path must be handled outside of the TUSB422.

Upon enabling TUSB422 for DFP, the TUSB422 will continuously monitor both CC1 and CC2 for a connection. After a connection has been determined, the TUSB422 will notify system of event by asserting the INT_N pin low. Upon detecting assertion of INT_N, the external microprocessor should read and clear the appropriate *Alert* registers.

The following steps are for initialization of the TUSB422 for DFP operation.

1. Upon TUSB422 power-up, the Power Status flag in *Alert* Register should get set indicating TUSB422 is initialized. When set, this flag will cause the INT_N pin to be assert low.
2. SW read the Alert Registers to determine reason for INT_N assertion. The expectation is Power Status bit (Reg10h bit 1) is set.
3. SW read Power Status register and notice that TCPC_INIT_STATUS flag is cleared. This indicates TUSB422 is ready.
4. SW clear Power Status bit in Alert register by writing a 1'b1 to the bit.
5. Program the TUSB422 to present Rp on both CC pins. This is done by writing 0x05 to the *Role Control* register. If advertising greater than default Type-C current is desired, then write 0x15 for 1.5 A current or 0x25 for 3 A current advertisement
6. Write Look4Connection command to the *Command* register.
7. The TUSB422 now presents Rp on both CC pins and look for a connection.

注

Because TUSB422 supports Dead Battery Mode, a dedicated DFP application (like a Car Charger) which uses the TUSB422 should incorporate a diode in the source power path circuitry to block VBUS from being received by another attached DFP/DRP that is providing VBUS.

7.3.4 UFP (Upstream Facing Port)

A UFP is a port that will present Rd on its CC pins and sink VBUS. The TUSB422 functions as a UFP by programming the *Role Control* register to 0x0A. This will cause TUSB422 to present a Rd on both CC pins.

The following steps are for initialization of the TUSB422 for DFP operation.

1. Upon TUSB422 power-up, the Power Status flag in *Alert* Register should get set indicating TUSB422 is initialized. When set, this flag will cause the INT_N pin to be assert low.
2. SW read the Alert Registers to determine reason for INT_N assertion. The expectation is Power Status bit (Reg10h bit 1) is set.
3. SW read Power Status register and notice that TCPC_INIT_STATUS flag is cleared. This indicates TUSB422 is ready.
4. SW clear Power Status bit in *Alert* register by writing a 1'b1 to the bit.
5. Program the TUSB422 to present Rd on both CC pins. This is done by writing 0x0A to the *Role Control* register
6. Write Look4Connection command to the Command register.
7. The TUSB422 now presents Rd on both CC pins and look for a connection.

7.3.5 DRP (Dual-Role Port)

A Dual-Role port functions as both a DFP and a UFP. The TUSB422 supports DRP either autonomously or manually. In autonomous DRP mode, the TUSB422 state machine toggles between UFP (Rd) and DFP (Rp) on both its CC pins. Autonomous DRP is enabled by programming *Role Control* register to 0x4A and writing Looking4Connection command to the *Command* register. Manual mode is under complete control of external processor. External processor must toggle between writing 0x0A and 0x05 to *Role Control* register at interval defined by Type-C specification summarized in 表 2.

表 2. USB Type-C DRP Toggle Requirements

PARAMETER	MIN	MAX	DESCRIPTION
t_{DRP}	50 ms	100 ms	The period a DRP shall complete a Source (Rp) to Sink (Rd) and back advertisement
dcSRC.DRP	30%	70%	The percent of time that DRP shall advertise Source (Rp) during t_{DRP} .

The following steps are for initialization of the TUSB422 for DRP operation.

1. Upon TUSB422 power-up, the Power Status flag in *Alert* Register should get set indicating TUSB422 is initialized. When set, this flag will cause the INT_N pin to be assert low.
2. SW read the *Alert* Registers to determine reason for INT_N assertion. The expectation is Power Status bit (Reg10h bit 1) is set.
3. SW read Power Status register and notice that TCPC_INIT_STATUS flag is cleared. This indicates TUSB422 is ready.
4. SW clear Power Status bit in *Alert* register by writing a 1'b1 to the bit.
5. Program the TUSB422 to present Rd on both CC pins. This is done by writing 0x4A to the *Role Control* register
6. Write Look4Connection command to the Command register.
7. The TUSB422 now presents Rd on both Rp pins and look for a connection.

The TUSB422 autonomously toggles between Rd and Rp according to the setting of the *CC General Control* register. If a value other than default value is desired, then CC General control should be programmed to desired value before performing Step 6.

7.3.6 Type-C Current Mode Advertising

Once a valid cable detection and attach have been completed, the TUSB422 has the option to advertise thru CC1/CC2 pins the level of Type-C current a UFP can sink. The TUSB422 supports all three possible Type-C current options: Default (500 mA / 900 mA), Medium(1.5 A), and High (3 A). The current advertisement used by TUSB422 is determined by the value programmed in the *Role Control* register.

注

V_{DD} must be greater than 3.0 V to advertise 3 A current.

7.3.7 VBUS Source Enable/Disable Control

The TUSB422 is unable to directly control VBUS enable due to no GPIO support. For this reason, external microprocessor must directly control the Vbus enable. If it wishes, the external microprocessor may notify the TUSB422 when Vbus has been enable/disabled, or raised above vSafe5V value. Notification to TUSB422 comes in the form of writing to the *Command* register any of the following commands: SourceVbusDefaultVoltage (that is, vSafe5V enable), SourceVbusHighVoltage (that is, greater than vSafe5V), or DisableSourceVbus. If these commands are issued to the TUSB422, the TUSB422 ignores these commands.

7.3.8 VBUS Sink Enable/Disable Control

The TUSB422 cannot directly control VBUS Sink path, and therefore; VBUS sink path control is handled externally. Software may write the SinkVbus command to TUSB422 *Command* register, but the TUSB422 ignores this command.

版权 © 2016–2018, Texas Instruments Incorporated

7.3.9 VBUS Monitoring

One of the features of USB PD is the ability to raise VBUS above the default vSafe5V level. The ability to monitor the VBUS voltage level is critical to determining when VBUS is at desired level as well as when VBUS is no longer present. The TUSB422 implements measuring of VBUS and the results are stored in the *VBUS Voltage* register. The VBUS voltage measurement is enabled by setting the VBUS_VOLTAGE_MONITOR bit in the *Power Control* register.

7.3.10 VBUS Discharge

The TUSB422 implements internal VBUS discharge. The TUSB422 can be setup to discharge VBUS automatically based on Type-C conditions or software can force a VBUS discharge by setting the FORCE_DISCHARGE bit in the *Power Control* register.

The TUSB422 cannot directly control the enable of external VBUS switch. Therefore, software must disable VBUS switch before or immediately after discharge of VBUS is required.

The TUSB422 meets the USB PD standard with a bulk capacitance defined by $C_{(BULK_SRC)}$. If bulk capacitance greater than $C_{(BULK_SRC)}$ is required, then external VBUS discharge must be used. If an external VBUS discharge is desired, the TUSB422 internal VBUS discharge circuit can be disabled by setting the INT_VBUSDIS_DISABLE bit in the *VBUS and VCONN Control* register.

7.3.11 VBUS to CC Short Detection from Legacy Charger

A legacy Type-A charger will always have VBUS active. When customer plugs a Type-A to Type-C cable into both charger and TUSB422, the TUSB422 immediately detects Rp and then detects VBUS. If for some reason, there is a short between VBUS and CC, the TUSB422 the CC pin is exposed to VBUS voltage. The TUSB422 implements a detection of VBUS to CC short by monitoring voltage level on each the CC pin. If the initial voltage is above 3.5 V and TUSB422 is presenting Rd, then the TUSB422 will set the CC_FAULT status flag. The TUSB422 keeps the CC1_STATE and CC2_STATE flags in the open state. This indicates a invalid connection exist and user should be notified. The TUSB422 continues to look for a valid connection. Once user removes the fault condition (for example, selects a new cable), the TUSB422 indicates a valid connection by updating CC1_STATE and CC2_STATE to appropriate value.

7.3.12 VBUS Power Source Requirements

The TUSB422 is a Source if MESSAGE_HEADER_INFO POWER_ROLE = 1. As outlined in the USB TCPCi specification, the TUSB422 when operating as a source discharges VBUS under any of the following conditions when Auto Discharge (AUTO_DISCHARGE_DISCONNECT = 1) is enabled.

- Disconnect (Removal of Rd by port partner) is detected. The TUSB422 discharges VBUS to vSafe0V.
- Upon setting Force Discharge bit, the TUSB422 discharges VBUS to either vSafe0V or to the voltage specified by *VBUS Stop Discharge* register.

The TUSB422 does not automatically discharge VBUS upon reception of a Hard Reset.

7.3.13 VBUS Power Sink Requirements.

The TUSB422 is a Sink if MESSAGE_HEADER_INFO POWER_ROLE = 0. As outlined in the TCPC specification, the TUSB422 when operating as a sink must discharge VBUS to vSafe0V under any of the following conditions when Auto Discharge (AUTO_DISCHARGE_DISCONNECT = 1) is enabled.

- If VBUS present detection is enabled and *VBUS Sink Disconnect Threshold* register is zero and VBUS present bit in the Power Status register transitions from a 1 to 0.
- VBUS crosses the threshold programmed in the VBUS Sink Disconnect Threshold register.

7.3.14 VCONN

VCONN is required by active cables, emarker, and VCONN powered accessories like Alt Mode adapters. These types of devices or cables present Ra on one CC pin and Rd on the other CC pin. VCONN must be enabled when any of device or cable requiring VCONN is connected to a Type-C port and the TUSB422 is operating as a DFP or DFP in DRP mode. Software can also enable the VCONN switch when the TUSB422 is a UFP during a VCONN_SWAP sequence. The TUSB422 implements a VCONN switch which is controlled by software. The default state of this switch is open. By setting the ENABLE_VCONN bit in *Power Control* register, the TUSB422 removes closes the switch resulting in VCONN power to be connected to the CC pin indicated by value of PLUG_ORIENTATION bit in *TCPC Control* register.

Once the VCONN switch is closed, the switch can be opened by any of the following conditions.

- Software clear ENABLE_VCONN bit in *Power Control* register.
- VCONN overcurrent fault condition occurs resulting in TUSB422 opening VCONN switch and setting the VCONN_OCP_FAULT_STATUS bit in *Fault Status* register.
- Over temperature condition detected by TUSB422. Must be enabled in *OTSD Control* register.
- Hard Reset ordered set is received.
- Cable is removed (Rd no longer present) results in TUSB422 opening VCONN switch and discharging VCONN to vSafe0V

The TUSB422 discharges VCONN to vSafe0V by enabling Rd at designated CC pin anytime the VCONN switch transitions from closed to open state. Once at vSafe0V, the TUSB422 disables the discharge circuit by removing Rd and then re-enable Rp (assuming it is still enabled in *Role Control* register).

If an external VCONN discharge is desired, the TUSB422 internal VCONN discharge circuit can be disabled by setting the INT_VCONNDIS_DISABLE bit in the *VBUS and VCONN Control* register.

Before closing the VCONN switch, the TCPM must make sure the voltage on VCONN pin is at a valid level. When opening the VCONN switch by clearing the ENABLE_VCONN bit, the TCPM software must make sure voltage on VCONN pin is at valid level until after VCONN switch is opened and then, if desired, can remove the voltage from the VCONN pin. Removing the voltage on VCONN pin before Vconn switch is opened will result in a false VCONN fault condition.

7.3.15 Interrupts

The TUSB422 asserts the INT_N pin low anytime an unmasked event occurs. Upon assertion of the interrupt, the TCPM should read the *Alert* Registers to determine the reason for interrupt. Upon reading the *Alert* register, the TCPM should clear the interrupt by writing a 1’b1 to the appropriate field in the Alert register.

If the FAULT flag is set in the *Alert* register, the TCPM must first read the *Fault Status* register to determine reason for fault. Then clear the appropriate field in the *Fault Status* register by writing a 1’b1. Once all fields in *Fault Status* register are cleared, the TCPM can then clear the flag in the *Alert* Register by writing a 1’b1.

The TUSB422 also has Vendor Defined Interrupt registers which is not part of the USB TCPC specification. These vendor defined interrupts are masked by default. Software can enable vendor interrupts by setting the appropriate bit in the Vendor Interrupts Mask Register and setting the VENDOR_IRQ_MASK field in the Alert Mask register.

7.3.16 Fast Role Swap

The TUSB422 supports Fast Role Swap TX as defined in the USB Power Delivery 3.0 specification. The TUSB422 does not support Fast Role Swap RX function.

The TUSB422 can also transmit a FastRole swap pulse. This is done by writing a 1’b1 to the TX_FAST_ROLE_SWAP bit in the PHY BMC TX Control register. Upon setting this bit, the TUSB422 generates a FastRole swap pulse as defined by $T_{FRSWAPTX}$ parameter. The TUSB422 clears the TX_FAST_ROLE_SWAP bit after it has completed the transmission.

版权 © 2016–2018, Texas Instruments Incorporated

7.4 Device Functional Modes

7.4.1 Unattached Mode

Unattached mode is the primary mode of operation for the TUSB422 since a USB port can be unattached for a lengthy period of time. In this mode, the TUSB422 may be configured as UFP (present Rd on both CC pins), DFP (present Rp on both CC pins), or DRP (alternate between Rp and Rd on both CC pins) operation and waiting for a connection. The TUSB422 remains in this mode until a connection is detected. Upon detection of a connection, the INT_N pin will be asserted low.

In Unattached mode, VDD is available, and all IOs are operational. VCONN is disabled. USB PD BMC phy is disabled.

7.4.2 Active Mode

The TUSB422 is in the Active mode when either CC1_STATE field or CC2_STATE field in the *CC Status* register are non-zero, the TCPM has completed the required Type-C debounce of CC pins, and the TCPM has set the AUTO_DISCHARGE_DISCONNECT in the *Power Control* register. In active mode, all IOs are operational, and VCONN is available for an active cable. The USB PD phy can be enabled in this mode by setting the *Receiver Detect Register* to a non-zero value. The USB PD BMC PHY functionality can only be used if the TUSB422 is in any of the following active states: Attached.SRC, Attached.SNK, DebugAccessory, or PoweredAccessory. Use of TUSB422 USB PD BMC PHY in any other active state is not permitted.

7.4.3 Power Role Swap

Upon entering the active mode, the power provider and consumer is determined by whether or not TUSB422 is presenting a Rp or a Rd on CC pins. If TUSB422 is presenting a Rp, then TUSB422 is a power provider. If TUSB422 is presenting a Rd, then TUSB422 is a power consumer. Once in the active mode, it may become necessary change power role through performing a power role swap. Key requirements for performing a power role swap by the software are listed below. For additional details on power role swap, consult the USB PD specification.

Transition from power provider to power consumer:

1. TCPM state machine needs to transition from Attached.SRC to Attached.SNK.
2. Disable VBUS source. TCPM should send DisableSourceVbus command to TUSB422 *Command* register.
3. Once VBUS is at vSafe0V, disable AUTO_DISCHARGE_DISCONNECT in Power Control register and change *Role Control* register to present a Rd.
4. Upon reception of PS_RDY message from port partner, update message header information and send PS_RDY back to port partner.
5. Enable Sink VBUS and VBUS presence detection. TCPM should send SinkVbus and EnableVbusDetect commands to TUSB422 *Command* register.

Transition from power consumer to power provider:

1. Disable AUTO_DISCHARGE_DISCONNECT in the *Power Control* register
2. Disable VBUS presence detection. TCPM should send DisableVbusDetect command to TUSB422 *Command* register.
3. Disable system sink VBUS. TCPM should also send DisableSinkVbus command to TUSB422 *Command* register.
4. TCPM state machine needs to transition from Attached.SNK to Attached.SRC.
5. Upon reception of PS_RDY message from port partner, change *Role Control* register to present a Rp.
6. Enable system source VBUS. TCPM should send SourceVbusDefaultVoltage command to TUSB422 *Command* register.
7. Once VBUS is at vSafe5V, the TCPM should update message header information and then send PS_RDY to its port partner.
8. Upon successful completion of power-role swap, enable AUTO_DISCHARGE_DISCONNECT in the *Power Control* register

Device Functional Modes (接下页)

注

During Power-role swap, the TUSB422 will disable its VCONN. Software workaround is to re-enable VCONN and issue error recovery for VCONN powered accessories. This may result in momentary loss of video/data.

7.4.4 Debug Accessory

A Debug accessory is a device which presents Rd on both of TUSB422 CC pins or Rp on both of TUSB422 CC pins. The TUSB422 upon detecting either of these two conditions on its CC pins performs the required Type-C debounce. If either condition is still present at end of the debounce, the TUSB422 sets the DEBUG_ACC_CONNECTED bit in the Power Status Register.

The TCPM is required to determine cable orientation by reading the CC1_STATE and CC2_STATE in the *CC Status* register and writing the orientation to the PLUG_ORIENTATION bit in the *TCPC Control* register.

表 3. DebugAccessory Attached as a Sink

CC1_STATE	CC2_STATE	TCPM Writes to PLUG_ORIENTATION bit
2'b10 (Rd)	2'b01 (Ra)	1'b0. PD communication over CC1
2'b01 (Ra)	2'b10 (Rd)	1'b1. PD communication over CC2

表 4. DebugAccessory Attached as a Source

CC1_STATE	CC2_STATE	TCPM Writes to PLUG_ORIENTATION bit
Voltage is greater than CC2_STATE.	Voltage is less than CC1_STATE.	1'b0. PD communication over CC1
Voltage is less than CC2_STATE	Voltage is greater than CC1_STATE.	1'b1. PD communication over CC2

7.4.5 Dead Battery Mode

Low battery power could cause conditions in which communication over USB Type-C can no longer be maintained. When this situation occurs, it is critical to transition to attached.SNK state so that power from VBUS can be used to charge the battery back to an operational level. This condition is known as Dead Battery Mode. The TUSB422 supports dead-battery mode by presenting Rd to both CC pins when V_{DD} is no longer active.

In the dead-battery mode access to TUSB422 registers is not available. Upon exiting dead-battery mode, the TUSB422 enters mode dictated by the value of *Role Control* register.

注

When exiting dead battery mode, the TUSB422's Rd is momentarily removed for about 100 µs during power up. This should not cause an issue in system since USB-C standard requires 100 ms debounce on CC pins.

版权 © 2016–2018, Texas Instruments Incorporated

7.5 Programming

The TUSB422 is controlled using I2C. The TUSB422 local I2C interface is available for reading/writing after $T_{INT_N_LOW}$ after the device is powered up. The SCL and SDA terminals are used for I2C clock and I2C data respectively.

图 5. TUSB422 I2C Addresses

7 (MSB)	6	5	4	3	2	1	0 (W/R)
0	1	0	0	0	0	0	0/1

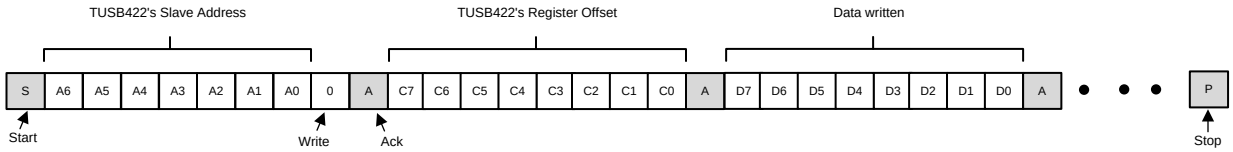

图 6. I2C Write With Data

The following procedure should be followed to write data to TUSB422 I^2C registers (refer to 图 6):

1. The master initiates a write operation by generating a start condition (S), followed by the TUSB422 7-bit address and a zero-value “W/R” bit to indicate a write cycle.
2. The TUSB422 acknowledges the address cycle.
3. The master presents the sub-address (I^2C register within TUSB422) to be written, consisting of one byte of data, MSB-first.
4. The TUSB422 acknowledges the sub-address cycle.
5. The master presents the first byte of data to be written to the I^2C register.
6. The TUSB422 acknowledges the byte transfer
7. The master may continue presenting additional bytes of data to be written, with each byte transfer completing with an acknowledge from the TUSB422.
8. The master terminates the write operation by generating a stop condition (P).

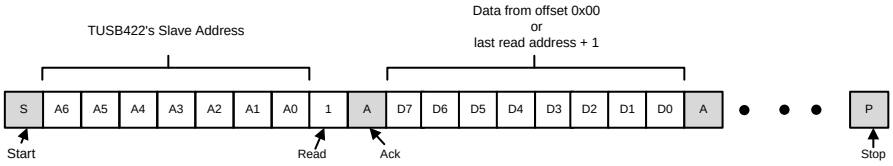

图 7. I2C Read Without Repeated Start

The following procedure should be followed to read the TUSB422 I^{2}C registers without a repeated Start (refer 图 7).

1. The master initiates a read operation by generating a start condition (S), followed by the TUSB422 7-bit address and a zero-value “W/R” bit to indicate a read cycle.
2. The TUSB422 acknowledges the 7-bit address cycle.
3. Following the acknowledge the master continues sending clock.
4. The TUSB422 transmit the contents of the memory registers MSB-first starting at register 00h or last read sub-address+1. If a write to the I^{2}C register occurred prior to the read, then the TUSB422 shall start at the sub-address specified in the write.
5. The TUSB422 waits for either an acknowledge (ACK) or a not-acknowledge (NACK) from the master after each byte transfer; the I^{2}C master acknowledges reception of each data byte transfer.
6. If an ACK is received, the TUSB422 transmits the next byte of data as long as master provides the clock. If a NAK is received, the TUSB422 stops providing data and waits for a stop condition (P).
7. The master terminates the write operation by generating a stop condition (P).

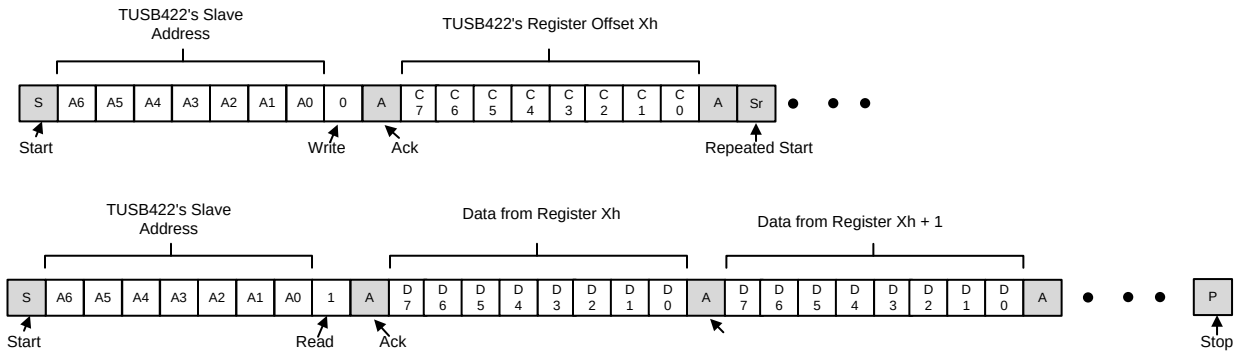

图 8. I2C Read With Repeated Start

The following procedure should be followed to read the TUSB422 I^{2}C registers with a repeated Start (refer 图 8).

1. The master initiates a read operation by generating a start condition (S), followed by the TUSB422 7-bit address and a zero-value “W/R” bit to indicate a write cycle.
2. The TUSB422 acknowledges the 7-bit address cycle.
3. The master presents the sub-address (I^{2}C register within TUSB422) to be written, consisting of one byte of data, MSB-first.
4. The TUSB422 acknowledges the sub-address cycle.
5. The master presents a repeated start condition (Sr).
6. The master initiates a read operation by generating a start condition (S), followed by the TUSB422 7-bit address and a one-value “W/R” bit to indicate a read cycle.
7. The TUSB422 acknowledges the 7-bit address cycle.
8. The TUSB422 transmit the contents of the memory registers MSB-first starting at the sub-address.
9. The TUSB422 shall wait for either an acknowledge (ACK) or a not-acknowledge (NACK) from the master after each byte transfer; the I^{2}C master acknowledges reception of each data byte transfer.
10. If an ACK is received, the TUSB422 transmits the next byte of data as long as master provides the clock. If a NAK is received, the TUSB422 stops providing data and waits for a stop condition (P).
11. The master terminates the read operation by generating a stop condition (P).

版权 © 2016–2018, Texas Instruments Incorporated

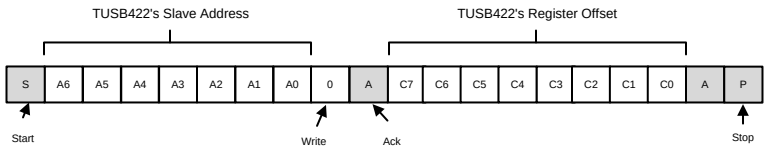

图 9. I2C Write Without Data

The following procedure should be followed for setting a starting sub-address for I^2C reads (refer to 图 8).

1. The master initiates a write operation by generating a start condition (S), followed by the TUSB422 7-bit address and a zero-value “W/R” bit to indicate a write cycle.
2. The TUSB422 acknowledges the address cycle.
3. The master presents the sub-address (I^2C register within TUSB422) to be written, consisting of one byte of data, MSB-first.
4. The TUSB422 acknowledges the sub-address cycle.
5. The master terminates the write operation by generating a stop condition (P).

After initial power-up, if no sub-addressing is included for the read procedure (refer to 图 8), then reads start at register offset 00h and continue byte by byte through the registers until the I^2C master terminates the read operation. During a read operation, the TUSB422 auto-increments the I^2C internal register address of the last byte transferred independent of whether or not an ACK was received from the I2C master.

7.6 Register Maps

表 5. Register Maps

ADDRESS	REGISTER NAME	RESET	DEFINITION
0x00	VENDOR_ID_BYTE_0	0x51	
0x01	VENDOR_ID_BYTE_1	0x04	
0x02	PRODUCT_ID_BYTE_0	0x22	
0x03	PRODUCT_ID_BYTE_1	0x04	
0x04	DEVICE_ID_BYTE_0	0x00	
0x05	DEVICE_ID_BYTE_1	0x01	
0x06	USBTYPEC_REV_BYTE_0	0x11	
0x07	USBTYPEC_REV_BYTE_1	0x00	
0x08	USBPD_REV_VER_BYTE_0	0x11	
0x09	USBPD_REV_VER_BYTE_1	0x20	
0x0A	PD_INTERFACE_REV_BYTE_0	0x10	
0x0B	PD_INTERFACE_REV_BYTE_1	0x10	
0x0C .. 0x0F	Reserved	0x00	Reserved
0x10	ALERT_BYTE_0	0x00	
0x11	ALERT_BYTE_1	0x00	
0x12	ALERT_MASK_BYTE_0	0xFFh	
0x13	ALERT_MASK_BYTE_1	0x0F	
0x14	POWER_STATUS_MASK	0xFF	
0x15	FAULT_STATUS_MASK	0x7F	
0x16 .. 0x17	Reserved	0x00	Reserved
0x18	CONFIG_STARDARD_OUTPUT	0x60	
0x19	TCPC_CONTROL	0x00	
0x1A	ROLE_CONTROL	0x0A	
0x1B	FAULT_CONTROL	0x06	
0x1C	POWER_CONTROL	0x60	
0x1D	CC_STATUS	0x00	
0x1E	POWER_STATUS	0x00	
0x1F	FAULT_STATUS	0x00	
0x20 .. 0x22	Reserved	0x00	Reserved
0x23	COMMAND	0x00	
0x24	DEVICE_CAPABILITIES_1_BYTE_0	0x98	
0x25	DEVICE_CAPABILITIES_1_BYTE_1	0x1E	
0x26	DEVICE_CAPABILITIES_2_BYTE_0	0xC5	
0x27	DEVICE_CAPABILITIES_2_BYTE_1	0x00	
0x28	STANDARD_INPUT_CAPABILITIES	0x00	
0x29	STANDARD_OUTPUT_CAPABILITIES	0x00	
0x2A .. 0x2D	Reserved	0x00	Reserved
0x2E	MESSAGE_HEADER_INFO	0x02	
0x2F	RECEIVE_DETECT	0x00	
0x30	RECEIVE_BYTE_COUNT	0x00	Number of Bytes in the RECEIVE_BUFFER that are not stale.
0x31	RX_BUF_FRAME_TYPE	0x00	Type of received frame (with a reference to a description of the register)
0x32	RX_BUF_HEADER_BYTE_0	0x00	Byte 0 (bits 7..0) of RX message header
0x33	RX_BUF_HEADER_BYTE_1	0x00	Byte 1 (bits 15..8) of RX message header
0x34	RX_BUF_OBJ1_BYTE_0	0x00	RX Byte 0 (bits 7..0) of 1st data object

版权 © 2016–2018, Texas Instruments Incorporated

Register Maps (接下页)

表 5. Register Maps (接下页)

ADDRESS	REGISTER NAME	RESET	DEFINITION
0x35	RX_BUF_OBJ1_BYTE_1	0x00	RX Byte 1 (bits 15..8) of 1st data object
0x36	RX_BUF_OBJ1_BYTE_2	0x00	RX Byte 2 (bits 23..16) of 1st data object
0x37	RX_BUF_OBJ1_BYTE_3	0x00	RX Byte 3 (bits 31..24) of 1st data object
0x38	RX_BUF_OBJ2_BYTE_0	0x00	RX Byte 0 (bits 7..0) of 2nd data object
0x39	RX_BUF_OBJ2_BYTE_1	0x00	RX Byte 1 (bits 15..8) of 2nd data object
0x3A	RX_BUF_OBJ2_BYTE_2	0x00	RX Byte 2 (bits 23..16) of 2nd data object
0x3B	RX_BUF_OBJ2_BYTE_3	0x00	RX Byte 3 (bits 31..24) of 2nd data object
0x3C	RX_BUF_OBJ3_BYTE_0	0x00	RX Byte 0 (bits 7..0) of 3rd data object
0x3D	RX_BUF_OBJ3_BYTE_1	0x00	RX Byte 1 (bits 15..8) of 3rd data object
0x3E	RX_BUF_OBJ3_BYTE_2	0x00	RX Byte 2 (bits 23..16) of 3rd data object
0x3F	RX_BUF_OBJ3_BYTE_3	0x00	RX Byte 3 (bits 31..24) of 3rd data object
0x40	RX_BUF_OBJ4_BYTE_0	0x00	RX Byte 0 (bits 7..0) of 4th data object
0x41	RX_BUF_OBJ4_BYTE_1	0x00	RX Byte 1 (bits 15..8) of 4th data object
0x42	RX_BUF_OBJ4_BYTE_2	0x00	RX Byte 2 (bits 23..16) of 4th data object
0x43	RX_BUF_OBJ4_BYTE_3	0x00	RX Byte 3 (bits 31..24) of 4th data object
0x44	RX_BUF_OBJ5_BYTE_0	0x00	RX Byte 0 (bits 7..0) of 5th data object
0x45	RX_BUF_OBJ5_BYTE_1	0x00	RX Byte 1 (bits 15..8) of 5th data object
0x46	RX_BUF_OBJ5_BYTE_2	0x00	RX Byte 2 (bits 23..16) of 5th data object
0x47	RX_BUF_OBJ5_BYTE_3	0x00	RX Byte 3 (bits 31..24) of 5th data object
0x49	RX_BUF_OBJ6_BYTE_1	0x00	RX Byte 1 (bits 15..8) of 6th data object
0x4A	RX_BUF_OBJ6_BYTE_2	0x00	RX Byte 2 (bits 23..16) of 6th data object
0x4B	RX_BUF_OBJ6_BYTE_3	0x00	RX Byte 3 (bits 31..24) of 6th data object
0x4C	RX_BUF_OBJ7_BYTE_0	0x00	RX Byte 0 (bits 7..0) of 7th data object
0x4D	RX_BUF_OBJ7_BYTE_1	0x00	RX Byte 1 (bits 15..8) of 7th data object
0x4E	RX_BUF_OBJ7_BYTE_2	0x00	RX Byte 2 (bits 23..16) of 7th data object
0x4F	RX_BUF_OBJ7_BYTE_3	0x00	RX byte 3 (bits 31..24) of 7th data object
0x50	TRANSMIT	0x00	Retry count and SOP* TX type
0x51	TRANSMIT_BYTE_COUNT	0x00	The number of bytes the TCPM will write
0x52	TX_BUF_HEADER_BYTE_0	0x00	Byte 0 (bits 7..0) of TX message header
0x53	TX_BUF_HEADER_BYTE_1	0x00	Byte 1 (bits 15..8) of TX message header
0x54	TX_BUF_OBJ1_BYTE_0	0x00	TX Byte 0 (bits 7..0) of 1st data object
0x55	TX_BUF_OBJ1_BYTE_1	0x00	TX Byte 1 (bits 15..8) of 1st data object
0x56	TX_BUF_OBJ1_BYTE_2	0x00	TX Byte 2 (bits 23..16) of 1st data object
0x57	TX_BUF_OBJ1_BYTE_3	0x00	TX Byte 3 (bits 31..24) of 1st data object
0x58	TX_BUF_OBJ2_BYTE_0	0x00	TX Byte 0 (bits 7..0) of 2nd data object
0x59	TX_BUF_OBJ2_BYTE_1	0x00	TX Byte 1 (bits 15..8) of 2nd data object
0x5A	TX_BUF_OBJ2_BYTE_2	0x00	TX Byte 2 (bits 23..16) of 2nd data object
0x5B	TX_BUF_OBJ2_BYTE_3	0x00	TX Byte 3 (bits 31..24) of 2nd data object
0x5C	TX_BUF_OBJ3_BYTE_0	0x00	TX Byte 0 (bits 7..0) of 3rd data object
0x5D	TX_BUF_OBJ3_BYTE_1	0x00	TX Byte 1 (bits 15..8) of 3rd data object
0x5E	TX_BUF_OBJ3_BYTE_2	0x00	TX Byte 2 (bits 23..16) of 3rd data object
0x5F	TX_BUF_OBJ3_BYTE_3	0x00	TX Byte 3 (bits 31..24) of 3rd data object
0x60	TX_BUF_OBJ4_BYTE_0	0x00	TX Byte 0 (bits 7..0) of 4th data object
0x61	TX_BUF_OBJ4_BYTE_1	0x00	TX Byte 1 (bits 15..8) of 4th data object
0x62	TX_BUF_OBJ4_BYTE_2	0x00	TX Byte 2 (bits 23..16) of 4th data object
0x63	TX_BUF_OBJ4_BYTE_3	0x00	TX Byte 3 (bits 31..24) of 4th data object

版权 © 2016–2018, Texas Instruments Incorporated

Register Maps (接下页)

表 5. Register Maps (接下页)

ADDRESS	REGISTER NAME	RESET	DEFINITION
0x64	TX_BUF_OBJ5_BYTE_0	0x00	TX Byte 0 (bits 7..0) of 5th data object
0x65	TX_BUF_OBJ5_BYTE_1	0x00	TX Byte 1 (bits 15..8) of 5th data object
0x66	TX_BUF_OBJ5_BYTE_2	0x00	TX Byte 2 (bits 23..16) of 5th data object
0x67	TX_BUF_OBJ5_BYTE_3	0x00	TX Byte 3 (bits 31..24) of 5th data object
0x68	TX_BUF_OBJ6_BYTE_0	0x00	TX Byte 0 (bits 7..0) of 6th data object
0x69	TX_BUF_OBJ6_BYTE_1	0x00	TX Byte 1 (bits 15..8) of 6th data object
0x6A	TX_BUF_OBJ6_BYTE_2	0x00	TX Byte 2 (bits 23..16) of 6th data object
0x6B	TX_BUF_OBJ6_BYTE_3	0x00	TX Byte 3 (bits 31..24) of 6th data object
0x6C	TX_BUF_OBJ7_BYTE_0	0x00	TX Byte 0 (bits 7..0) of 7th data object
0x6D	TX_BUF_OBJ7_BYTE_1	0x00	TX Byte 1 (bits 15..8) of 7th data object
0x6E	TX_BUF_OBJ7_BYTE_2	0x00	TX Byte 2 (bits 23..16) of 7th data object
0x6F	TX_BUF_OBJ7_BYTE_3	0x00	TX Byte 3 (bits 31..24) of 7th data object
0x70	VBUS_VOLTAGE_BYTE_0	0x00	LSB of VBUSIN measured voltage in 25mV steps.
0x71	VBUS_VOLTAGE_BYTE_1	0x00	MSB of VBUSIN measured voltage in 25mV steps.
0x72	VBUS_SINK_DISCONNECT_THRESHOLD_BYTE_0	0x00	
0x73	VBUS_SINK_DISCONNECT_THRESHOLD_BYTE_1	0x00	
0x74	VBUS_STOP_DISCHARGE_THRESHOLD_BYTE_0	0x00	
0x75	VBUS_STOP_DISCHARGE_THRESHOLD_BYTE_1	0x00	
0x76	VBUS_VOLTAGE_ALARM_HI_CFG_BYTE_0	0x00	
0x77	VBUS_VOLTAGE_ALARM_HI_CFG_BYTE_1	0x00	
0x78	VBUS_VOLTAGE_ALARM_LO_CFG_BYTE_0	0x00	
0x79	VBUS_VOLTAGE_ALARM_LO_CFG_BYTE_1	0x00	
0x7A .. 0x7F	Reserved	0x00	Reserved
Vendor Defined Space (0x80 thru 0xFF)			
0x80 .. 0x8F	Reserved	0x00	Reserved.
0x90	Vendor Interrupt Status	0x00	
0x92	Vendor Interrupt Mask	0x00	
0x94	CC General Control	0x04	
0x95	PHY BMC TX Control	0x00	
0x96	PHY BMC RX Control	0x00	
0x97	PHY BMC RX Status	0x00	
0x98	VBUS and VCONN Control	0x00	
0x99	OTSD Control	0x00	
0x9A .. 0x9F	Reserved	0x00	
0xA0	LFO Timer Low	0x00	
0xA1	LFO Timer High	0x00	
0xA2 .. 0xFE	Reserved	0x00	Reserved.
0xFF	Page Select	0x00	Page Select

版权 © 2016–2018, Texas Instruments Incorporated

7.6.1 CSR Registers

表 6. Register Definitions

ACCESS TAG	NAME	DESCRIPTION
R	Read	The field may be read by software
W	Write	The field may be written by software
S	Set	The field may be set by a write of one. Writes of zeros to the field have no effect.
C	Clear	The field may be cleared by a write of one. Write of zero to the field have no effect.
A	Clear after Read	The field will be cleared by hardware upon software reading from the field
U	Update	Hardware may autonomously update this field.
NA	No Access	Not accessible or not applicable

Unless otherwise noted, all undefined or reserved registers are read-only and return zeros when read. Also unless otherwise noted, writes to undefined or reserved registers will be acknowledged but data will be discarded.

7.6.2 Vendor ID Byte 0 Register (address = 0x00) [reset = 0x51]

图 10. Vendor ID Byte 0 Register

7	6	5	4	3	2	1	0
VENDOR_ID_BYTE_0							
R							

LEGEND: R/W = Read/Write; R = Read only

表 7. Vendor ID Byte 0 Register Field Descriptions

Bit	Field	Type	Reset	Description
7:0	VENDOR_ID_BYTE_0	R	0x51	Byte 0 of a 16-bit USB-IF defined Texas Instruments vendor ID of 0x0451.

7.6.3 Vendor ID Byte 1 Register (address = 0x01) [reset = 0x04]

图 11. Vendor ID Byte 1 Register

7	6	5	4	3	2	1	0
VENDOR_ID_BYTE_0							
R							

LEGEND: R/W = Read/Write; R = Read only

表 8. Vendor ID Byte 1 Register Field Descriptions

Bit	Field	Type	Reset	Description
7:0	VENDOR_ID_BYTE_1	R	0x04	Byte 1 of a 16-bit USB-IF defined Texas Instruments vendor ID of 0x0451.

7.6.4 Product ID Byte 0 Register (address = 0x02) [reset = 0x22]

图 12. Product ID Byte 0 Register

7	6	5	4	3	2	1	0
PRODUCT_ID_BYTE_0							
R							

LEGEND: R/W = Read/Write; R = Read only

表 9. Product ID Byte 0 Register Field Descriptions

Bit	Field	Type	Reset	Description
7:0	PRODUCT_ID_BYTE_0	R	0x22	Byte 0 of a TUSB422 16-bit Product ID of 0x0422.

7.6.5 Product ID Byte 1 Register (address = 0x03) [reset = 0x04]

图 13. Product ID Byte 1 Register

7	6	5	4	3	2	1	0
PRODUCT_ID_BYTE_1							
R							

LEGEND: R/W = Read/Write; R = Read only

表 10. Product ID Byte 1 Register Field Descriptions

Bit	Field	Type	Reset	Description
7:0	PRODUCT_ID_BYTE_1	R	0x04	Byte 1 of a TUSB422 16-bit Product ID of 0x0422.

版权 © 2016–2018, Texas Instruments Incorporated

7.6.6 Device ID Byte 0 Register (address = 0x04) [reset = 0x00]

图 14. Device ID Byte 0 Register

7	6	5	4	3	2	1	0
Device_ID_BYTE_0							
R							

LEGEND: R/W = Read/Write; R = Read only

表 11. Device ID Byte 0 Register Field Descriptions

Bit	Field	Type	Reset	Description
7:0	Device_ID_BYTE_0	R	0x00	Byte 0 of a 16-bit Device ID.

7.6.7 Device ID Byte 1 Register (address = 0x05) [reset = 0x01]

图 15. Device ID Byte 1 Register

7	6	5	4	3	2	1	0
Device_ID_BYTE_0							
R							

LEGEND: R/W = Read/Write; R = Read only

表 12. Device ID Byte 1 Register Field Descriptions

Bit	Field	Type	Reset	Description
7:0	Device_ID_BYTE_1	R	0x01	Byte 1 of a 16-bit Device ID.

7.6.8 USB Type-C Revision Byte 0 Register (address = 0x06) [reset = 0x11]

图 16. USB Type-C Revision Byte 0 Register

7	6	5	4	3	2	1	0
USBTYPEC_REV_BYTE_0							
R							

LEGEND: R/W = Read/Write; R = Read only

表 13. USB Type-C Revision Byte 0 Register Field Descriptions

Bit	Field	Type	Reset	Description
7:0	USBTYPEC_REV_BYTE_0	R	0x11	Byte 0 of a 16-bit USB Type-C Revision. Revision 1.1. The TUSB422 also supports USB Type-C Revision 1.2.

7.6.9 USB Type-C Revision Byte 1 Register (address = 0x07) [reset = 0x00]

图 17. USB Type-C Revision Byte 1

7	6	5	4	3	2	1	0
USBTYPEC_REV_BYTE_1							
R							

LEGEND: R/W = Read/Write; R = Read only

表 14. USB Type-C Revision Byte 1 Descriptions

Bit	Field	Type	Reset	Description
7:0	USBTYPEC_REV_BYTE_1	R	0x00	Byte 1 of a 16-bit USB Type-C Revision.

7.6.10 USB PD Revision Version Byte 0 Register (address = 0x08) [reset = 0x11]

图 18. USB PD Revision Version Byte 0

7	6	5	4	3	2	1	0
USBPD_REV_VER_BYTE_0							
R							

LEGEND: R/W = Read/Write; R = Read only

表 15. USB PD Revision Version Byte 0 Descriptions

Bit	Field	Type	Reset	Description
7:0	USBPD_REV_VER_BYTE_0	R	0x11	Byte 0 of a 16-bit USB PD version. Version 1.1.

7.6.11 USB PD Revision Version Byte 1 Register (address = 0x09) [reset = 0x20]

图 19. USB PD Revision Version Byte 1

7	6	5	4	3	2	1	0
USBPD_REV_VER_BYTE_1							
R							

LEGEND: R/W = Read/Write; R = Read only

表 16. USB PD Revision Version Byte 1 Descriptions

Bit	Field	Type	Reset	Description
7:0	USBPD_REV_VER_BYTE_1	R	0x20	Byte 1 of a 16-bit USB PD Revision. Revision 2.0.

7.6.12 PD Interface Revision Byte 0 Register (address = 0x0A) [reset = 0x10]

图 20. PD Interface Revision Byte 0

7	6	5	4	3	2	1	0
PD_INTERFACE_REV_BYTE_0							
R							

LEGEND: R/W = Read/Write; R = Read only

表 17. PD Interface Revision Byte 0 Descriptions

Bit	Field	Type	Reset	Description
7:0	PD_INTERFACE_REV_BYTE_0	R	0x10	Byte 0 of a 16-bit PD Interface (TCPC) Version. Version 1.0

7.6.13 PD Interface Revision Byte 1 Register (address = 0x0B) [reset = 0x10]

图 21. PD Interface Revision Byte 1

7	6	5	4	3	2	1	0
PD_INTERFACE_REV_BYTE_1							
R							

LEGEND: R/W = Read/Write; R = Read only

表 18. PD Interface Revision Byte 1 Descriptions

Bit	Field	Type	Reset	Description
7:0	PD_INTERFACE_REV_BYTE_1	R	0x10	Byte 1 of a 16-bit PD Interface (TCPC) Revision. Revision 1.0

版权 © 2016–2018, Texas Instruments Incorporated

7.6.14 Alert Byte 0 Register (address = 0x10) [reset = 0x00]

This register is used to indicate a status change event. When a status change event occurs and its corresponding Alert mask is unmasked, the TUSB422 will assert the INT_N low. The INT_N remains asserted until all events are cleared by write of 1'b1. Once all events are cleared or corresponding Alert mask is masked, the INT_N will be de-asserted high.

图 22. Alert Byte 0 Register

7	6	5	4	3	2	1	0
VBUS_ALARM_HI	TX_SOP_SUCCESS	TX_SOP_DISCARD	TX_SOP_FAIL	RX_HARD_RESET	RX_SOP_STATUS	CC_STATUS	CC_STATUS
RCU	RCU	RCU	RCU	RCU	RCU	RCU	RCU

LEGEND: R/W = Read/Write; R = Read only

表 19. Alert Byte 0 Register Descriptions

Bit	Field	Type	Reset	Description
7	VBUS_ALARM_HI	RCU	0	VBUS Voltage Alarm Hi. 0b: Cleared 1b: A high-voltage alarm has occurred
6	TX_SOP_SUCCESS	RCU	0	Transmit SOP* Message Successful 0b: Cleared 1b: Reset or SOP* message transmission successful. GoodCRC response received on SOP* message transmission. Transmit SOP* message buffer registers are empty.
5	TX_SOP_DISCARD	RCU	0	Transmit SOP* Message Discarded 0b: Cleared 1b: Reset or SOP* message transmission not sent due to incoming receive message. Transmit SOP* message buffer registers are empty.
4	TX_SOP_FAIL	RCU	0	Transmit SOP* Message Failed 0b: Cleared 1b: SOP* message transmission not successful, no GoodCRC response received on SOP* message transmission. Transmit SOP* message buffer registers are empty.
3	RX_HARD_RESET	RCU	0	Received Hard Reset. 0b: Cleared. 1b: Received Hard Reset message
2	RX_SOP_STATUS	RCU	0	Receive SOP* Message Status. Note RECEIVE_BYTE_COUNT being zero does not set this bit. 0b: Cleared. 1b: Receive buffer register changed.
1	PWR_STATUS	RCU	0	Power Status 0b: Cleared. 1b: Power Status Changed
0	CC_STATUS	RCU	0	CC Status. 0b: Cleared 1b: CC status changed

7.6.15 Alert Byte 1 Register (address = 0x11) [reset = 0x00]

This register is used to indicate a status change event. When a status change event occurs and its corresponding Alert mask is unmasked, the TUSB422 will assert the INT_N low. The INT_N remains asserted until all events are cleared by write of 1'b1. Once all events are cleared or corresponding Alert mask is masked, the INT_N will be de-asserted high.

图 23. Alert Byte 1 Register

7	6	5	4	3	2	1	0
VENDOR_IRQ_STAT	Reserved			VBUS_SINK_DIS	RX_BUF_OVR	FAULT	VBUS_ALARM_LO
RCU	R			RCU	RCU	RCU	RCU

LEGEND: R/W = Read/Write; R = Read only

表 20. Alert Byte 1 Register Descriptions

Bit	Field	Type	Reset	Description
7	VENDOR_IRQ_STAT	RCU	0	This field is set if a Vendor defined interrupt that is unmasked is set. TCPM SW should first clear the appropriate bit in Vendor Interrupt Status register before clearing this field. 0b: Vendor IRQ not asserted. 1b: Vendor IRQ asserted.
6:4	Reserved	R	0x0	Reserved
3	VBUS_SINK_DIS	RCU	0	VBUS Sink Disconnect Detected. 0b: Cleared 1b: A VBUS Sink Disconnect Threshold crossing has been detected
2	RRX_BUF_OVR	RCU	0	Rx Buffer Overflow 0b: TUSB422 Rx buffer is functioning properly 1b: TUSB422 Rx buffer has overflowed Writing 1 to this register acknowledges the overflow. The overflow is cleared by writing to ALERT.ReceiveSOP*MessageStatus
1	FAULT	RCU	0	Fault 0b: No Fault 1b: A Fault has occurred. Read the FAULT_STATUS register
0	VBUS_ALARM_LO	RCU	0	VBUS Voltage Alarm Lo 0b: Cleared 1b: A low-voltage alarm has occurred

版权 © 2016–2018, Texas Instruments Incorporated

7.6.16 Alert Mask Byte 0 Register (address = 0x12) [reset = 0xFFh]

This register controls whether or not a status change event in Alert register will cause the INT_N to be asserted low. When a specific event is masked, its corresponding status change event will not cause INT_N to be asserted low.

图 24. Alert Mask Byte 0 Register

7	6	5	4	3	2	1	0
VBUS_ALARM_HI_MASK	TX_SOP_SUCCESS_MASK	TX_SOP_DISCARD_MASK	TX_SOP_FAIL_MASK	RX_HARD_RESET_MASK	RX_SOP_STATUS_MASK	PWR_STATUS_MASK	CC_STATUS_MASK
R/W	R/W	R/W	R/W	R/W	R/W	R/W	R/W

LEGEND: R/W = Read/Write; R = Read only

表 21. Alert Mask Byte 0 Register Descriptions

Bit	Field	Type	Reset	Description
7	VBUS_ALARM_HI_MASK	R/W	1	VBUS Voltage Alarm Hi 0b: Interrupt masked 1b: Interrupt unmasked
6	TX_SOP_SUCCESS_MASK	R/W	1	Transmit SOP* Message successful Interrupt Mask 0b: Interrupt masked 1b: Interrupt unmasked
5	TX_SOP_DISCARD_MASK	R/W	1	Transmit SOP* Message discarded Interrupt Mask 0b: Interrupt masked 1b: Interrupt unmasked
4	TX_SOP_FAIL_MASK	R/W	1	Transmit SOP* Message failed Interrupt Mask 0b: Interrupt masked 1b: Interrupt unmasked
3	RX_HARD_RESET_MASK	R/W	1	Received Hard Reset Message Status Interrupt Mask 0b: Interrupt masked 1b: Interrupt unmasked
2	RX_SOP_STATUS_MASK	R/W	1	Receive SOP* Message Status Interrupt Mask 0b: Interrupt masked 1b: Interrupt unmasked
1	PWR_STATUS_MASK	R/W	1	Power Status Interrupt Mask 0b: Interrupt masked 1b: Interrupt unmasked
0	CC_STATUS_MASK	R/W	1	CC Status Interrupt Mask 0b: Interrupt masked 1b: Interrupt unmasked

7.6.17 Alert Mask Byte 1 Register (address = 0x13) [reset = 0x0F]

This register controls whether or not a status change event in Alert register will cause the INT_N to be asserted low. When a specific event is masked, its corresponding status change event will not cause INT_N to be asserted low.

图 25. Alert Mask Byte 1 Register

7	6	5	4	3	2	1	0
VBUS_AIRQ_MASK	Reserved			VBUS_SINK_DIS_MASK	RX_BUF_OVR_MASK	FAULT_MASK	VBUS_ALARM_LO_MASK
R/W	R			R/W	R/W	R/W	R/W

LEGEND: R/W = Read/Write; R = Read only

表 22. Alert Mask Byte 1 Register Descriptions

Bit	Field	Type	Reset	Description
7	VBUS_IRO_MASK	R/W	1	Vendor Defined interrupt mask. . When this field is set to a 1'b1, the unmasked vendor interrupts can cause INT_N to be asserted. 0b: Interrupt masked 1b: Interrupt unmasked
6:4	Reserved	R	0x0	Reserved
3	VBUS_SINK_DIS_MASK	R/W	1	VBUS Sink Disconnect Detected Mask 0b: Interrupt masked 1b: Interrupt unmasked
2	RX_BUF_OVR_MASK	R/W	1	Rx Buffer Overflow Mask 0b: Interrupt masked 1b: Interrupt unmasked
1	FAULT_MASK	R/W	1	Fault Mask 0b: Interrupt masked 1b: Interrupt unmasked
0	VBUS_ALARM_LO_MASK	R/W	1	VBUS Voltage Alarm Lo Mask 0b: Interrupt masked 1b: Interrupt unmasked

版权 © 2016–2018, Texas Instruments Incorporated

7.6.18 Power Status Mask Register (address = 0x14) [reset = 0xFF]

图 26. Power Status Mask Register

7	6	5	4	3	2	1	0
DEBUG_ACCESSORY_MASK	TCPC_INIT_STATUS_MASK	SRC_HIGH_VBUS_STATUS_MASK	SRC_VBUS_STATUS_MASK	VBUS_PRES_DET_STATUS_MASK	VBUS_PRES_INT_MASK	VCONN_PRES_INT_MASK	SINK_VBUS_STATUS_INT_MASK
R/W	R/W	R/W	R/W	R/W	R/W	R/W	R/W

LEGEND: R/W = Read/Write; R = Read only

表 23. Power Status Mask Register Descriptions

Bit	Field	Type	Reset	Description
7	DEBUG_ACCESSORY_MASK	R/W	1	Debug Accessory Connected Mask 0b: Interrupt masked 1b: Interrupt unmasked
6	TCPC_INIT_STATUS_MASK	R/W	1	TCPC Initialization Status Mask 0b: Interrupt masked 1b: Interrupt unmasked
5	SRC_HIGH_VBUS_STATUS_MASK	R/W	1	Sourcing High Voltage Status Interrupt Mask 0b: Interrupt masked 1b: Interrupt unmasked
4	SRC_VBUS_STATUS_MASK	R/W	1	Sourcing VBUS Status Interrupt Mask 0b: Interrupt masked 1b: Interrupt unmasked
3	VBUS_PRES_DET_STATUS_MASK	R/W	1	VBUS Present Detection Status Interrupt Mask 0b: Interrupt masked 1b: Interrupt unmasked
2	VBUS_PRES_INT_MASK	R/W	1	VBUS Present Status Interrupt Mask 0b: Interrupt masked 1b: Interrupt unmasked
1	VCONN_PRES_INT_MASK	R/W	1	VCONN Present Status Interrupt Mask 0b: Interrupt masked 1b: Interrupt unmasked
0	SINK_VBUS_STATUS_INT_MASK	R/W	1	Sinking VBUS Status Interrupt Mask 0b: Interrupt masked 1b: Interrupt unmasked

7.6.19 FAULT Status Mask Register (address = 0x15) [reset = 0x7F]

图 27. FAULT Status Mask Register

7	6	5	4	3	2	1	0
Reserved	FORCE_VBUS_MASK	AUTO_DISC_FAIL_MASK	FORCE_DISC_FAIL_MASK	VBUS_OCP_FAIL_STATUS_MASK	VBUS_OVP_FAIL_STATUS_MASK	VCONN_OCP_FAULT_STATUS_MASK	I2C_INT_ERR_STATUS_MASK
R/W	R/W	R/W	R/W	R/W	R/W	R/W	R/W

LEGEND: R/W = Read/Write; R = Read only

表 24. FAULT Status Mask Register Descriptions

Bit	Field	Type	Reset	Description
7	Reserved	R/W	0	Reserved
6	FORCE_VBUS_MASK	R/W	1	Force Off V_{BUS} Interrupt Status Mask 0b: Interrupt masked 1b: Interrupt unmasked
5	AUTO_DISC_FAIL_MASK	R/W	1	Auto Discharge Failed Mask 0b: Interrupt masked 1b: Interrupt unmasked
4	FORCE_DISC_FAIL_MASK	R/W	1	Force Discharge Failed Mask 0b: Interrupt masked 1b: Interrupt unmasked
3	VBUS_OCP_FAIL_STATUS_MASK	R/W	1	Internal or External OCP V_{BUS} Over Current Protection Fault Interrupt Status Mask 0b: Interrupt masked 1b: Interrupt unmasked For TUSB422 this field has no meaning.
2	VBUS_OVP_FAIL_STATUS_MASK	R/W	1	Internal or External OVP V_{BUS} Over Voltage Protection Fault Interrupt Status Mask 0b: Interrupt masked 1b: Interrupt unmasked For TUSB422 this field has no meaning.
1	VCONN_OCP_FAULT_STATUS_MASK	R/W	1	$V_{(VCONN)}$ Over Current Fault Interrupt Status Mask 0b: Interrupt masked 1b: Interrupt unmasked
0	I2C_INT_ERR_STATUS_MASK	R/W	1	I2C Interface Error Interrupt Status Mask 0b: Interrupt masked 1b: Interrupt unmasked

版权 © 2016–2018, Texas Instruments Incorporated

7.6.20 Config Standard Output Register (address = 0x18) [reset = 0x60]

图 28. Config Standard Output

7	6	5	4	3	2	1	0
HIGH_Z_OUTPUTS	DEBUG_ACC_CONNECTED#	AUDIO_ACC_CONNECTED#	ACTIVE_CABLE_CONNECTED	MUX_CTRL		CONNECTION_PRES	CONN_ORIENT
R/W	R/W	R/W	R/W	R/W	R/W	R/W	R/W

LEGEND: R/W = Read/Write; R = Read only

表 25. Config Standard Output Descriptions

Bit	Field	Type	Reset	Description
7	HIGH_Z_OUTPUTS	R/W	0	High Impedance outputs 0b: Standard output control (default) 1b: Force all outputs to high impedance May be used to save power in Sleep. For TUSB422 this field has no meaning.
6	DEBUG_ACC_CONNECTED#	R/W	1	Debug Accessory Connected# 0b: Debug Accessory Connected# output is driven low 1b: Debug Accessory Connected# output is driven high Controlled by either the TCPM or TUSB422. For TUSB422 this field has no meaning.
5	AUDIO_ACC_CONNECTED#	R/W	1	Audio Accessory Connected# 0b: Audio Accessory connected 1b: No Audio Accessory connected (default) For TUSB422 this field has no meaning.
4	ACTIVE_CABLE_CONNECTED	R/W	0	Active Cable Connected 0b: No Active Cable connected (default) 1b: Active Cable connected For TUSB422 this field has no meaning.
3:2	MUX_CTRL	R/W	0	MUX Control 00b: No connection (default) 01b: USB3.1 Connected 10b: DP Alternate Mode – 4 lanes 11b: USB3.1 + Display Port Lanes 0 & 1 For TUSB422 this field has no meaning.
1	CONNECTION_PRES	R/W	0	Connection Present 0b: No Connection (default) 1b: Connection Controlled by the TCPM. For TUSB422 this field has no meaning.
0	CONN_ORIENT	R/W	0	Connector Orientation 0b: Normal (CC1=A5, CC2=B5, TX1=A2/A3, RX1=B10/B11) default 1b: Flipped (CC2=A5, CC1=B5, TX1=B2/B3, RX1=A10/A11) . For TUSB422 this field has no meaning.

7.6.21 TCPC Control Register (address = 0x19) [reset = 0x00]

图 29. TCPC Control Register

7	6	5	4	3	2	1	0
Reserved			DEBUG_ACC_CTL	I2C_CLOCK_STRETCHING_CTL		BIST_TEST_MODE	PLUG_ORIENTATION
R			R/W	R	R	R/W	R/W

LEGEND: R/W = Read/Write; R = Read only

表 26. TCPC Control Register Descriptions

Bit	Field	Type	Reset	Description
7:5	Reserved	R	000	Reserved
4	DEBUG_ACC_CTL	R/W	0	0b: Controlled by TUSB422 (power on default) 1b: Controlled by TCPM. The TCPM writes 1b to this register to take over control of asserting the DebugAccessoryConnected#. This field has no meaning for TUSB422.
3:2	I2C_CLOCK_STRETCHING_CTL	R	00	Clock Stretching Control 00b: Disable clock stretching. TUSB422 will not perform any clock stretching during I2C transfers. 01b: Reserved 10b: Enable clock stretching. TUSB422 is allowed limited clock stretching during each I2C Transfer. 11b: Enable clock stretching only if the Alert pin is not asserted. As soon as Alert is asserted, clock stretching is disabled by the TUSB422. TUSB422 does not support clock stretching
1	BIST_TEST_MODE	R/W	0	Setting this bit to 1 is intended to be used only when a USB compliance tester is using USB BIST Test Data to test the PHY layer of the TUSB422. The TCPM should clear this bit when a detach is detected. 0: Normal Operation. Incoming messages enabled by RECEIVE_DETECT passed to TCPM via Alert. 1: BIST Test Mode. Incoming messages enabled by RECEIVE_DETECT result in GoodCRC response but will not be passed to the TCPM via Alert.
0	PLUG_ORIENTATION	R/W	0	0b: When VCONN is enabled, apply it to the CC2 pin. Monitor the CC1 pin for BMC communications if PD messaging is enabled. 1b: When VCONN is enabled, apply it to the CC1 pin. Monitor the CC2 pin for BMC communications if PD messaging is enabled.

版权 © 2016–2018, Texas Instruments Incorporated

7.6.22 ROLE Control Register (address = 0x1A) [reset = 0x0A]

图 30. ROLE Control Register

7	6	5	4	3	2	1	0
Reserved.	DRP	RP_VALUE		CC2		CC1	
R	R/W	R/W		R/W		R/W	

LEGEND: R/W = Read/Write; R = Read only

表 27. ROLE Control Register Descriptions

Bit	Field	Type	Reset	Description
7	Reserved	R	0	Reserved.
6	DRP	R/W	0	0b: No DRP. Bits B3..0 determine Rp/Rd/Ra or open settings 1b: DRP
5:4	RP_VALUE	R/W	00	00b: Rp default current 01b: Rp 1.5 A 10b: Rp 3 A 11b: Reserved
3:2	CC2	R/W	2'b10	00b: Ra 01b: Rp (Use Rp definition in B5..4) 10b: Rd 11b: Open (Disconnect or don't care)
1:0	CC1	R/W	2'b10	00b: Ra 01b: Rp (Use Rp definition in B5..4) 10b: Rd 11b: Open (Disconnect or don't care)

7.6.23 FAULT Control Register (address = 0x1B) [reset = 0x06]

图 31. FAULT Control Register

7	6	5	4	3	2	1	0
Reserved			FORCE_OFF_VBUS	VBUS_DIS_FAULT_DETECT_TIMER	VBUS_OCP_FAULT	VBUS_OVP_FAULT	Reserved
R			R/W	R/W	R/W	R/W	R/W

LEGEND: R/W = Read/Write; R = Read only

表 28. FAULT Control Register Descriptions

Bit	Field	Type	Reset	Description
7:5	Reserved	R	0	Reserved
4	FORCE_OFF_VBUS	R/W	0	0b: Allow STANDARD INPUT SIGNAL Force Off V_{BUS} control (default) 1b: Block STANDARD INPUT SIGNAL Force Off V_{BUS} control. This field has no meaning for TUSB422.
3	VBUS_DIS_FAULT_DETECT_TIMER	R/W	0	0b: VBUS Discharge Fault Detection Timer enabled 1b: VBUS Discharge Fault Detection Timer disabled
2	VBUS_OCP_FAULT	R/W	1	0b: Internal and External OCP circuit enabled 1b: Internal and External OCP circuit disabled This field has no meaning for TUSB422.
1	VBUS_OVP_FAULT	R/W	1	0b: Internal and External OVP circuit enabled 1b: Internal and External OVP circuit disabled This field has no meaning for TUSB422.
0	Reserved	R/W	0	Reserved

7.6.24 Power Control Register (address = 0x1C) [reset = 0x60]

图 32. Power Control Register

7	6	5	4	3	2	1	0
Reserved	VBUS_VOLTAGE_MONITOR	DISABLE_VOLTAGE_ALARMS	AUTO_DISCHARGE_DISCONNECT	EN_BLEED_DISCHARGE	FORCE_DISCHARGE	VCONN_PWR_SUPPORTED	ENABLE_VCONN
R	R/W	R/W	R/W	R/W	RWU	RWU	R/W

LEGEND: R/W = Read/Write; R = Read only

表 29. Power Control Register Descriptions

Bit	Field	Type	Reset	Description
7	Reserved	R	0	Reserved
6	VBUS_VOLTAGE_MONITOR	R/W	1	0b: VBUS_VOLTAGE Monitoring is enabled. 1b: VBUS_VOLTAGE Monitoring is disabled. Controls only VBUS VOLTAGE Monitoring. VBUS_VOLTAGE will report all zeroes if disabled.
5	DISABLE_VOLTAGE_ALARMS	R/W	1	0b: Voltage Alarms Power status reporting is enabled 1b: Voltage Alarms Power status reporting is disabled Controls VBUS_VOLTAGE_ALARM_HI_CFG and VBUS_VOLTAGE_ALARM_LO_CFG.
4	AUTO_DISCHARGE_DISCONNECT	R/W	0	0b: The TUSB422 shall not automatically discharge VBUS based on VBUS voltage. (Default) 1b: The TUSB422 shall automatically discharge
3	EN_BLEED_DISCHARGE	R/W	0	0b: Disable bleed discharge 1b: Enable bleed discharge of VBUS
2	FORCE_DISCHARGE	RWU	0	When this field is set, the TUSB422 will discharge VBUS to Vsafe0V or threshold programmed in the VBUS_STOP_DISCHARGE_THRESHOLD register. Once VBUS is discharged to desired level, the TUSB422 will disable the Force Discharge. 0b: Disable forced discharge 1b: Enable forced discharge of VBUS.
1	VCONN_PWR_SUPPORTED	R/W	0	0b: TUSB422 delivers at least 1W on VCONN 1b: TUSB422 delivers at least the power indicated in DEVICE_CAPABILITIES.VCONNPowerSupported
0	ENABLE_VCONN	RWU	0	0b: Disable VCONN Source 1b: Enable VCONN Source to CC indicated by PLUG_ORIENTATION in TCPC Control register.

版权 © 2016–2018, Texas Instruments Incorporated

7.6.25 CC Status Register (address = 0x1D) [reset = 0x00]

The CC pins are sampled based on the value CC_SAMPLE_RATE field but the TUSB422 will also immediately sample the CC pins when software reads from this register unless PD is not idle.

图 33. CC Status Register

7	6	5	4	3	2	1	0
Reserved		LOOKING4CONNECTION	CONNECT_RESULT	CC2_STATE		CC1_STATE	
R		RU	RU	RU		RU	

LEGEND: R/W = Read/Write; R = Read only

表 30. CC Status Register Descriptions

Bit	Field	Type	Reset	Description
7:6	Reserved	R	0	Reserved
5	LOOKING4CONNECTION	RU	0	0b: TUSB422 is not actively looking for a connection. A transition from '1' to '0' indicates a potential connection has been found. 1b: TUSB422 is looking for a connection (toggling as a DRP or looking for a connection as Sink/Source only condition)
4	CONNECT_RESULT	RU	0	0b: the TUSB422 is presenting Rp 1b: the TUSB422 is presenting Rd

3:2	CC2_STATE	RU	00	If (ROLE_CONTROL.CC2=Rp) or (CONNECT_RESULT=0)
				00b: SRC.Open (Open, Rp)
				01b: SRC.Ra (below maximum vRa)
				10b: SRC.Rd (within the vRd range)
				11b: reserved
				If (ROLE_CONTROL.CC2=Rd) or (CONNECT_RESULT=1)
				00b: SNK.Open (Below maximum vRa)
				01b: SNK.Default (Above minimum vRd-Connect)
				10b: SNK.Power1.5 (Above minimum vRd-Connect) Detects Rp 1.5A
				11b: SNK.Power3.0 (Above minimum vRd-Connect) Detects Rp 3.0A
				If ROLE_CONTROL.CC2=Ra, this field is set to 00b
				If ROLE_CONTROL.CC2=Open, this field is set to 00b
				This field always returns 00b if (Looking4Connection=1) or (POWER_CONTROL.ENABLE_VCONN=1 and TCPC_CONTROL.PLUG_ORIENTATION =0). Otherwise, the returned value depends upon ROLE_CONTROL.CC2.

1:0	CC1_STATE	RU	00	If (ROLE_CONTROL.CC1 = Rp) or (CONNECT_RESULT=0)
				00b: SRC.Open (Open, Rp)
				01b: SRC.Ra (below maximum vRa)
				10b: SRC.Rd (within the vRd range)
				11b: reserved
				If (ROLE_CONTROL.CC1 = Rd) or (CONNECT_RESULT=1)
				00b: SNK.Open (Below maximum vRa)
				01b: SNK.Default (Above minimum vRd-Connect)
				10b: SNK.Power1.5 (Above minimum vRd-Connect) Detects Rp-1.5A
				11b: SNK.Power3.0 (Above minimum vRd-Connect) Detects Rp-3.0A
				If ROLE_CONTROL.CC1=Ra, this field is set to 00b
				If ROLE_CONTROL.CC1=Open, this field is set to 00b
				This field always returns 00b if (Looking4Connection=1) or (POWER_CONTROL.ENABLE_VCONN=1 and TCPC_CONTROL.PLUG_ORIENTATION =1). Otherwise, the returned value depends upon ROLE_CONTROL.CC1.

7.6.26 Power Status Register (address = 0x1E) [reset = 0x00]

图 34. Power Status Register

7	6	5	4	3	2	1	0
DEBUG_ACC_CONNECTED	TCPC_INIT_STATUS	SOURCING_HIGH_VOLTAGE	SOURCING_VBUS	VBUS_PRES_DETECT_ENABLED	VBUS_PRESENT	VCONN_PRESENT	SINKING_VBUS
RU	RU	RU	RU	RU	RU	RU	RU

LEGEND: R/W = Read/Write; R = Read only

表 31. Power Status Register Descriptions

Bit	Field	Type	Reset	Description
7	DEBUG_ACC_CONNECTED	RU	0	0b: No Debug Accessory connected (default) 1b: Debug Accessory connected Reflects the state of the DebugAccessoryConnected# output if supported. Even though the TUSB422 doesn't have a debug accessory pin, TUSB422will set this flag to 1 if a debug accessory is detected.
6	TCPC_INIT_STATUS	RU	0	0b: The TUSB422 has completed initialization and all registers are valid. 1b: The TUSB422 is still performing internal initialization and the only registers that will return the correct values are 00h..0Fh. The TUSB422 will never set this flag so software needs to be aware at power-up one reason for INT_N assertion is TUSB422 has completed its initialization.
5	SOURCING_HIGH_VOLTAGE	RU	0	0b: vSafe5V 1b: High Voltage This does not control the path, just provides a monitor of the status. Assert as long as supplying voltage greater than vSafe5V.
4	SOURCING_VBUS	RU	0	0b: Sourcing VBUS is disabled 1b: Sourcing VBUS is enabled This does not control the path, just provides a monitor of the status.
3	VBUS_PRES_DETECT_ENABLED	RU	0	0b: VBUS Present Detection Disabled (Default) 1b: VBUS Present Detection Enabled Indicates if the TUSB422 is monitoring for VBUS Present or if the circuit has been powered off
2	VBUS_PRESENT	RU	0	0b: VBUS Disconnected 1b: VBUS Connected The TUSB422 shall report VBUS present when TUSB422 detects VBUS rises above 4 V. The TUSB422 shall report VBUS is not present when TUSB422 detects VBUS falls below 3.5 V. The TUSB422 may report VBUS is not present if VBUS is between 3.5 V and 4 V. When this field transitions from 1 to 0, VBUS Sink Disconnect Threshold field is all zeros, and Auto Discharge is enabled, the TUSB422 will discharge to vSafe0V. VBUS present status may be invalid immediately after enabling detection. Software needs to delay 1 polling period (~1ms) after enabling detection before reading VBUS_PRESENT status.
1	VCONN_PRESENT	RU	0	0b: VCONN is not present 1b: This bit is asserted when VCONN present CC1 or CC2. Threshold is fixed at 2.4 V
0	SINKING_VBUS	RU	0	0b: Sink is Disconnected 1b: TUSB422 is sinking VBUS to the system load

版权 © 2016–2018, Texas Instruments Incorporated

7.6.27 Fault Status Register (address = 0x1F) [reset = 0x00]

图 35. Fault Status Register

7	6	5	4	3	2	1	0
Reserved	FORCEOFF_VBUS_STATUS	AUTO_DIS_FAIL_STATUS	FORCE_DIS_FAIL_STATUS	VBUS_OCP_FAULT_STATUS	VBUS_OVP_FAULT_STATUS	VCONN_OCP_FAULT_STATUS	I2C_INT_ERROR_STATUS
R	RCU	RCU	RCU	RCU	RCU	RCU	RCU

LEGEND: R/W = Read/Write; R = Read only

表 32. Fault Status Register Descriptions

Bit	Field	Type	Reset	Description
7	Reserved	R	0	Shall be set to zero by sender and ignored by receiver
6	FORCEOFF_VBUS_STATUS	RCU	0	0b: No Fault Detected, no action (default and not supported) 1b: VBUS Source/Sink has been forced off due to external fault The TUSB422 has disconnected VBUS due to STANDARD_INPUT.ForceOffVbus. This field has no meaning for TUSB422
5	AUTO_DIS_FAIL_STATUS	RCU	0	0b: No discharge failure 1b: Discharge commanded by the TCPM failed If POWER_CONTROL.AutoDischargeDisconnect is set, the TUSB422 will report discharge fails if VBUS is not below vSafe0V within tSafe0V.
4	FORCE_DIS_FAIL_STATUS	RCU	0	0b: No discharge failure 1b: Discharge commanded by the TCPM failed If POWER_CONTROL.ForceDischarge is set, the TUSB422 will report a discharge fails if VBUS is not below vSafe0V within tSafe0V.
3	VBUS_OCP_FAULT_STATUS	RCU	0	0b: Not in an over-current protection state 1b: Over-current fault latched This field has no meaning for TUSB422
2	VBUS_OVP_FAULT_STATUS	RCU	0	0b: Not in an over-voltage protection state 1b: Over-voltage fault latched. This field has no meaning for TUSB422
1	VCONN_OCP_FAULT_STATUS	RCU	0	The TUSB422 will set this flag if an VCONN over current fault is detected. This flag will also get set if voltage on VCONN pin drops between VCONN present threshold while the Vconn switch is still closed. 0b: No Fault detected 1b: Over current VCONN fault latched
0	I2C_INT_ERROR_STATUS	RCU	0	0b: No Error 1b: I2C error has occurred. A TRANSMIT has been sent with an empty TRANSMIT_BUFFER.

7.6.28 Command Register (address = 0x23) [reset = 0x00]

图 36. Command Register

7	6	5	4	3	2	1	0
COMMAND							
RWU							

LEGEND: R/W = Read/Write; R = Read only

表 33. Command Register Descriptions

Bit	Field	Type	Reset	Description
7	COMMAND	RWU	0x00	0001 0001b WakeI2C. The TUSB422 will accept this command but will do nothing with it.
				0010 0010b DisableVbusDetect. Disable Vbus present detection. v
				0011 0011b EnableVbusDetect. Enable Vbus present detection.
				0100 0100b DisableSinkVbus. The TUSB422 clears SINKING_VBUS bit in Power Status register
				0101 0101b SinkVbus. If SNK_VBUS_SUPPORT bit is set, then TUSB422 will set SINKING_VBUS bit in Power Status register and enable VBUS present detection.
				0110 0110b DisableSourceVbus. The TUSB422 will clear SOURCING_VBUS and SOURCING_HIGH_VOLTAGE bits in Power Status register.
				0111 0111b SourceVbusDefaultVoltage. If SRC_VBUS_SUPPORT is set, the TUSB422 will set SOURCING_VBUS in Power Status register and will also enable VBUS present detection.
				1000 1000b SourceVbusHighVoltage. If SRC_VBUS_HIGH_SUPPORT is set, then TUSB422 will set SOURCING_HIGH_VOLTAGE in Power Status register.
				1001 1001b Look4Connection. Start DRP Toggling if ROLE_CONTROL.DRP=1b. If ROLE_CONTROL.CC1/CC2 = 01b start with Rp, if ROLE_CONTROL.CC1/CC2 =10b start with Rd. If ROLE_CONTROL.CC1/CC2 are not both 01b or 10b, then do not start toggling. The TCPM shall issue COMMAND.Look4Connection to enable the TUSB422 to restart Connection Detection in cases where the ROLE_CONTROL contents will not change. An example of this is when a potential connection as a Source occurred but was further debounced by the TCPM to find the Sink disconnected. In this case a Source Only or DRP should go back to its Unattached.Src state. This would result in ROLE_CONTROL staying the same. TUSB422 to MAINTAIN_STATE
				1010 1010b RxOneMore. Configure the receiver to automatically clear the RECEIVE_DETECT register after sending the next GoodCRC. This is used to shutdown reception of packets at a known point regardless of packet separation or the depth of the receive FIFO in the TUSB422.
				1100 1100b: Reserved. No Action
				1101 1101b: Reserved. No Action
				1110 1110b: Reserved. No Action
				1111 1111b I2C Idle. The TUSB422 will accept this command but will do nothing with it.

版权 © 2016–2018, Texas Instruments Incorporated

7.6.29 Device Capabilities 1 Byte 0 Register (address = 0x24) [reset = 0x98]

图 37. Device Capabilities 1 Byte 0

7	6	5	4	3	2	1	0
ROLES_SUPPORTED			SOP_DBG_SUPPORT	SRC_VCONN_SUPPORT	SNK_VBUS_SUPPORT	SRC_VBUS_HIGH_SUPPORT	SRC_VBUS_SUPPORT
R			R	R	R	R	R

LEGEND: R/W = Read/Write; R = Read only

表 34. Device Capabilities 1 Byte 0 Descriptions

Bit	Field	Type	Reset	Description
7:5	ROLES_SUPPORTED	R	100	Roles Supported. 000b: Type-C Port Manager can configure the Port as Source only or Sink only (not DRP) 001b: Source only. 010b: Sink only 011b: Sink with accessory support 100b: DRP only (Default for TUSB422) 101b: Source, Sink, DRP, Adapter/Cable all supported 110b: Source, Sink, DRP 111b: Not valid
4	SOP_DBG_SUPPORT	R	1	SOP'_DBG/SOP"_DBG Support 0b: All SOP* except SOP'_DBG/SOP"_DBG 1b: All SOP* messages are supported Configured in RECEIVE_DETECT and TRANSMIT
3	SRC_VCONN_SUPPORT	R	1	Source VCONN. 0b: TUSB422 is not capable of switching VCONN 1b: TUSB422 is capable of switching VCONN
2	SNK_VBUS_SUPPORT	R	0	Sink VBUS. 0b: TUSB422 is not capable controlling the sink path to the system load 1b: TUSB422 is capable of controlling the sink path to the system load
1	SRC_VBUS_HIGH_SUPPORT	R	0	Source High Voltage VBUS. 0b: TUSB422 is not capable of controlling the source high voltage path to VBUS 1b: TUSB422 is capable of controlling the source high voltage path to VBUS
0	SRC_VBUS_SUPPORT	R	0	Source VBUS. 0b: TUSB422 is not capable of controlling the source path to VBUS 1b: TUSB422 is capable of controlling the source path to VBUS

7.6.30 Device Capabilities 1 Byte 1 Register (address = 0x25) [reset = 0x1E]

图 38. Device Capabilities 1 Byte 1

7	6	5	4	3	2	1	0
Reserved	VBUS_OCP_SUPPORT	VBUS_OVP_SUPPORT	BLEED_DISCHARGE_SUPPORT	FORCE_DISCHARGE_SUPPORT	VBUS_MEASURE_ALARM_SUPPORT	SRC_RP_SUPPORT	
R	R	R	R	R	R	R	

LEGEND: R/W = Read/Write; R = Read only

表 35. Device Capabilities 1 Byte 1 Descriptions

Bit	Field	Type	Reset	Description
7	Reserved	R	0	Reserved
6	VBUS_OCP_SUPPORT	R	0	VBUS OCP Reporting 0b: VBUS OCP is not reported by the TUSB422 1b: VBUS OCP is reported by the TUSB422
5	VBUS_OVP_SUPPORT	R	0	VBUS OVP Reporting 0b: VBUS OVP is not reported by the TUSB422 1b: VBUS OVP is reported by the TUSB422
4	BLEED_DISCHARGE_SUPPORT	R	1	Bleed Discharge 0b: No Bleed Discharge implemented in TUSB422 1b: Bleed Discharge is implemented in the TUSB422 Support for POWER_CONTROL.EnableBleedDischarge implemented
3	FORCE_DISCHARGE_SUPPORT	R	1	Force Discharge. 0b: No Force Discharge implemented in TUSB422 1b: Force Discharge is implemented in the TUSB422 Support for POWER_CONTROL.ForceDischarge, FAULT_STATUS.VbusDischargeFail, FAULT_STATUS.VBUSDischargeFaultDetectionTimer, and VBUS_STOP_DISCHARGE_THRESHOLD implemented
2	VBUS_MEASURE_ALARM_SUPPORT	R	1	VBUS Measurement and Alarm Capable 0b: No VBUS voltage measurement nor VBUS Alarms 1b; VBUS voltage measurement and VBUS Alarms Support for VBUS_VOLTAGE, VBUS_VOLTAGE_ALARM_HI_CFG, VBUS_VOLTAGE_ALARM_LO_CFG implemented
1:0	SRC_RP_SUPPORT	R	10b	Source Resistor Supported 00b: Rp default only 01b: Rp 1.5 A and default 10b: Rp 3 A, 1.5 A, and default 11b: Reserved Rp values which may be configured by the TCPM via the ROLE_CONTROL register

版权 © 2016–2018, Texas Instruments Incorporated

7.6.31 Device Capabilities 2 Byte 0 Register (address = 0x26) [reset = 0xC5]

图 39. Device Capabilities 2 Byte 0 Register

7	6	5	4	3	2	1	0
SINK_DISCONNECT_DETECT_SUPPORT	STOP_DISCHARGE_THRESHOLD_SUPPORT	VBUS_VOLTAGE_ALARM_LSB		VCONN_PWR_SUPPORT			VCONN_OC_FAULT_SUPPORT
R	R	R		R			R

LEGEND: R/W = Read/Write; R = Read only

表 36. Device Capabilities 2 Byte 0 Register Descriptions

Bit	Field	Type	Reset	Description
7	SINK_DISCONNECT_DETECT_SUPPORT	R	1	Sink Disconnect Detection 0b: VBUS_SINK_DISCONNECT_THRESHOLD not implemented 1b: VBUS_SINK_DISCONNECT_THRESHOLD implemented
6	STOP_DISCHARGE_THRESHOLD_SUPPORT	R	1	Stop Discharge Threshold 0b: VBUS_STOP_DISCHARGE_THRESHOLD not implemented 1b: VBUS_STOP_DISCHARGE_THRESHOLD implemented
5:4	VBUS_VOLTAGE_ALARM_LSB	R	00	VBUS Voltage Alarm LSB. 00: TUSB422 has 25mV LSB for its voltage alarm and uses all 10 bits in VBUS_VOLTAGE_ALARM_HI_CFG and VBUS_VOLTAGE_ALARM_LO_CFG. 01: TUSB422 has 50mV LSB for its voltage alarm and uses only 9 bits. VBUS_VOLTAGE_ALARM_HI_CFG[0] and VBUS_VOLTAGE_ALARM_LO_CFG[0] are ignored by TUSB422. 10: TUSB422 has 100mV LSB for its voltage alarm and uses only 8 bits. VBUS_VOLTAGE_ALARM_HI_CFG[1:0] and VBUS_VOLTAGE_ALARM_LO_CFG[1:0] are ignored by TUSB422. 11: reserved Support for VBUS_VOLTAGE_ALARM_LO_CFG and VBUS_VOLTAGE_ALARM_HI implemented
3:1	VCONN_PWR_SUPPORT	R	010	VCONN Power Supported 000b: 1 W 001b: 1.5 W 010b: 2 W 011b: 3 W 100b: 4 W 101b: 5 W 110b: 6 W 111b: External
0	VCONN_OC_FAULT_SUPPORT	R	1	VCONN Overcurrent Fault Capable. 0b: TUSB422 is not capable of detecting a VCONN fault 1b: TUSB422 is capable of detecting a VCONN fault Support for FAULT_STATUS.VCONNOverCurrentFault and FAULT_CONTROL.VCONNOverCurrentFault implemented

7.6.32 Device Capabilities 2 Byte 1 Register (address = 0x27) [reset = 0x00]

图 40. Device Capabilities 2 Byte 1 Register

7	6	5	4	3	2	1	0
Reserved							
R							

LEGEND: R/W = Read/Write; R = Read only

表 37. Device Capabilities 2 Byte 1 Register Descriptions

Bit	Field	Type	Reset	Description
7:0	Reserved	R	0x00	Reserved

7.6.33 Standard Input Capabilities Register (address = 0x28) [reset = 0x00]

图 41. Standard Input Capabilities Register

7	6	5	4	3	2	1	0
Reserved					EXT_VBUS_OVF_SUPPORT	EXT_VBUS_OCF_SUPPORT	EXT_FORCE_OFF_VBUS_SUPPORT
R					R	R	R

LEGEND: R/W = Read/Write; R = Read only

表 38. Standard Input Capabilities Register Descriptions

Bit	Field	Type	Reset	Description
7:3	Reserved	R	0	Reserved
2	EXT_VBUS_OVF_SUPPORT	R	0	VBUS External Over Voltage Fault 0b: Not present in TUSB422 1b: Present in TUSB422 This field has no meaning for TUSB422
1	EXT_VBUS_OCF_SUPPORT	R	0	VBUS External Over Current Fault 0b: Not present in TUSB422 1b: Present in TUSB422 This field has no meaning for TUSB422
0	EXT_FORCE_OFF_VBUS_SUPPORT	R	0	Force Off VBUS (Source or Sink) 0b: Not present in TUSB422 1b: Present in TUSB422 This field has no meaning for TUSB422

版权 © 2016–2018, Texas Instruments Incorporated

7.6.34 Standard Output Capabilities Register (address = 0x29) [reset = 0x00]

图 42. Standard Output Capabilities Register

7	6	5	4	3	2	1	0
Reserved	DEBUG_ACCESSORY_OUT	VBUS_PRESENT_OUT	AUDIO_ACCESSORY_OUT	ACTIVE_CABLE_OUT	MUX_OUT	CONNECTION_OUT	CONNECTOR_ORIENT_OUT
R	R	R	R	R	R	R	R

LEGEND: R/W = Read/Write; R = Read only

表 39. Standard Output Capabilities Register Descriptions

Bit	Field	Type	Reset	Description
7	Reserved	R	0	Reserved
6	DEBUG_ACCESSORY_OUT	R	0	Debug Accessory Indicator 0b: Not present in TUSB422 1b: Present in TUSB422
5	VBUS_PRESENT_OUT	R	0	VBUS Present Monitor 0b: Not present in TUSB422 1b: Present in TUSB422
4	AUDIO_ACCESSORY_OUT	R	0	Audio Adapter Accessory Indicator 0b: Not present in TUSB422 1b: Present in TUSB422
3	ACTIVE_CABLE_OUT	R	0	Active Cable Indicator 0b: Not present in TUSB422 1b: Present in TUSB422
2	MUX_OUT	R	0	MUX Configuration Control 0b: Not present in TUSB422 1b: Present in TUSB422
1	CONNECTION_OUT	R	0	Connection Present 0b: Not present in TUSB422 1b: Present in TUSB422
0	CONNECTOR_ORIENT_OUT	R	0	Connector Orientation 0b: Not present in TUSB422 1b: Present in TUSB422

7.6.35 Message Header Info Register (address = 0x2E) [reset = 0x02]

The TCPM may change the default values. After a detach, the TCPM must clear this field back to default setting.

图 43. Message Header Info Register

7	6	5	4	3	2	1	0
Reserved			CABLE_PLUG	DATA_ROLE	USBPD_SPECREV		POWER_ROLE
R/W			R/W	R/W	R/W	R/W	R/W

LEGEND: R/W = Read/Write; R = Read only

表 40. Message Header Info Register Descriptions

Bit	Field	Type	Reset	Description
7:5	Reserved	R/W	000	Shall be set to zero by sender and ignored by receiver
4	CABLE_PLUG	R/W	0	0b: Message originated from Source, Sink, or DRP 1b: Message originated from a Cable Plug
3	DATA_ROLE	R/W	0	0b: UFP 1b: DFP
2:1	USBPD_SPECREV	R/W	01	00b: Revision 1.0 01b: Revision 2.0 10b: Revision 3.0 11b: Reserved Even though this field defaults to Revision 2.0, the TUSB422 does support some PD 3.0 features like Fast Role swap and chunked extended messages.
0	POWER_ROLE	R/W	0	0b: Sink 1b: Source

版权 © 2016–2018, Texas Instruments Incorporated

7.6.36 Receiver Detect Register (address = 0x2F) [reset = 0x00]

The TUSB422 will clear this register upon detect of a Hard Reset. The TUSB422 will not clear this register when a disconnect is detected. The TCPM must clear this register after detecting a disconnect.

图 44. Receiver Detect Register

7	6	5	4	3	2	1	0
Reserved	EN_CABLE_RESET	EN_HARD_RESET	EN_SOP_DBGPP	EN_SOP_DBGP	EN_SOPPP_MESSAGE	EN_SOPP_MESSAGE	EN_SOP_MESSAGE
R	RWU	RWU	RWU	RWU	RWU	RWU	RWU

LEGEND: R/W = Read/Write; R = Read only

表 41. Receiver Detect Register Descriptions

Bit	Field	Type	Reset	Description
7	Reserved	R	0	Shall be set to zero by sender and ignored by receiver
6	EN_CABLE_RESET	RWU	0	0b: TUSB422 does not detect Cable Reset signaling 1b: TUSB422 detects Cable Reset signaling
5	EN_HARD_RESET	RWU	0	0b: TUSB422 does not detect Hard Reset signaling 1b: TUSB422 detects Hard Reset signaling
4	EN_SOP_DBGPP	RWU	0	0b: TUSB422 does not detect SOP_DBG'' message 1b: TUSB422 detects SOP_DBG'' message
3	EN_SOP_DBGP	RWU	0	0b: TUSB422 does not detect SOP_DBG' message 1b: TUSB422 detects SOP_DBG' message
2	EN_SOPPP_MESSAGE	RWU	0	0b: TUSB422 does not detect SOP'' message 1b: TUSB422 detects SOP'' message
1	EN_SOPP_MESSAGE	RWU	0	0b: TUSB422 does not detect SOP' message 1b: TUSB422 detects SOP' message
0	EN_SOP_MESSAGE	RWU	0	0b: TUSB422 does not detect SOP message 1b: TUSB422 detects SOP message

7.6.37 Receive Byte Count Register (address = 0x30) [reset = 0x00]

The TUSB422 clears this field to 0x00 upon reception or transmission of a Hard Reset ordered set or after a disconnection is detected. The TUSB422 will also clear this field to 0x00 after the RX_SOP_STATUS bit in Alert register is cleared. Software will use this register to determine the numbers of bytes in the Receiver Buffer Data object.

图 45. Receive Byte Count Register

7	6	5	4	3	2	1	0
RECEIVE_BYTE_COUNT							
RU							

LEGEND: R/W = Read/Write; R = Read only

表 42. Receive Byte Count Register Descriptions

Bit	Field	Type	Reset	Description
7:0	RECEIVE_BYTE_COUNT	RU	0x00	Indicates number of bytes in this register that are not stale. The TCPM should read the first RECEIVE_BYTE_COUNT bytes in this register. This is the number of bytes in the RX_BUFFER_DATA_OBJECTS plus three (for the RX_BUF_FRAME_TYPE and RX_BUF_HEADER).

7.6.38 Receive Buffer Frame Type Register (address = 0x31) [reset = 0x00]

图 46. Receive Buffer Frame Type Register

7	6	5	4	3	2	1	0
Reserved					RX_SOP_MESSAGE		
R					RU		

LEGEND: R/W = Read/Write; R = Read only

表 43. Receive Buffer Frame Type Register Descriptions

Bit	Field	Type	Reset	Description
7:3	Reserved	R	0x00	Shall be set to zero by sender and ignored by receiver
2:0	RX_SOP_MESSAGE	RU	0x0	000b: Received SOP 001b: Received SOP' 010b: Received SOP'' 011b: Received SOP_DBG' 100b: Received SOP_DBG'' 110b: Received Cable Reset All others are reserved.

7.6.39 Receive Buffer Header Byte 0 Register (address = 0x32) [reset = 0x00]

图 47. Receive Buffer Header Byte 0 Register

7	6	5	4	3	2	1	0
RX_BUF_HDR_BYTE_0							
RU							

LEGEND: R/W = Read/Write; R = Read only

表 44. Receive Buffer Header Byte 0 Descriptions

Bit	Field	Type	Reset	Description
7:0	RX_BUF_HDR_BYTE_0	RU	0x00	Byte 0 (bits 7:0) of USB PD message header.

版权 © 2016–2018, Texas Instruments Incorporated

7.6.40 Receive Buffer Header Byte 1 Register (address = 0x33) [reset = 0x00]

图 48. Receive Buffer Header Byte 1 Register

7	6	5	4	3	2	1	0
RX_BUF_HDR_BYTE_1							
RU							

LEGEND: R/W = Read/Write; R = Read only

表 45. Receive Buffer Header Byte 1 Descriptions

Bit	Field	Type	Reset	Description
7:0	RX_BUF_HDR_BYTE_1	RU	0x00	Byte 1 (bits 15:8) of USB PD message header.

7.6.41 Receive Buffer Data Object 1 Through 7 Register (address = 0x34 through 0x4F) [reset = 0x00]

图 49. Receive Buffer Data Object 1 Through 7 Register

7	6	5	4	3	2	1	0
RX_BUFF_OBJx_BYTE_x							
RU							

LEGEND: R/W = Read/Write; R = Read only

表 46. Receive Buffer Data Object 1 Through 7 Descriptions

Bit	Field	Type	Reset	Description
7	RX_BUFF_OBJy_BYTE_x	R	0x00	RX Byte x.

7.6.42 Transmit Register (address = 0x50) [reset = 0x00]

The TUSB422 clears this register after packet is transmitted regardless of outcome.

Before attempting to transmit a packet, the RX_SOP_STATUS alert flag must be cleared; otherwise, the packet is discarded.

图 50. Transmit Register

7	6	5	4	3	2	1	0
Reserved		RETRY_COUNTER		Reserved	TX_SOP_MESSAGE		
R/W		RWU		R/W	RWU		

LEGEND: R/W = Read/Write; R = Read only

表 47. Transmit Register Descriptions

Bit	Field	Type	Reset	Description
7:6	Reserved	R/W	00	Shall be set to zero by sender and ignored by receiver
5:4	RETRY_COUNTER	RWU	00	00b: No message retry is required 01b: Automatically retry message transmission once 10b: Automatically retry message transmission twice 11b: Automatically retry message transmission three times
3	Reserved	R/W	0	Shall be set to zero by sender, shall be ignored by receiver
2:0	TX_SOP_MESSAGE	RWU	000	000b: Transmit SOP 001b: Transmit SOP' 010b: Transmit SOP" 011b: Transmit SOP_DBG' 100b: Transmit SOP_DBG'' 101b: Transmit Hard Reset 110b: Transmit Cable Reset 111b: Transmit BIST Carrier Mode 2

7.6.43 Transmit Byte Count Register (address = 0x51) [reset = 0x00]

The TUSB422 clears this register after packet is transmitted regardless of outcome.

图 51. Transmit Byte Count Register

7	6	5	4	3	2	1	0
TX_BYTE_COUNT							
RWU							

LEGEND: R/W = Read/Write; R = Read only

表 48. Transmit Byte Count Register Descriptions

Bit	Field	Type	Reset	Description
7:0	TX_BYTE_COUNT	RWU	0x00	The number of bytes the TCPM will write. This is the number of bytes in the TX_BUFFER_DATA_OBJECTS plus two (for the TX_BUF_HEADER)

7.6.44 Transmit Buffer Header Byte 0 Register (address = 0x52) [reset = 0x00]

图 52. Transmit Buffer Header Byte 0 Register

7	6	5	4	3	2	1	0
TX_BUF_HDR_BYTE_0							
R/W							

LEGEND: R/W = Read/Write; R = Read only

表 49. Transmit Buffer Header Byte 0 Register Descriptions

Bit	Field	Type	Reset	Description
7:0	TX_BUF_HDR_BYTE_0	R/W	0x00	Byte 0 (bits 7:0) of USB PD message header.

7.6.45 Transmit Buffer Header Byte 1 Register (address = 0x53) [reset = 0x00]

图 53. Transmit Buffer Header Byte 1 Register

7	6	5	4	3	2	1	0
TX_BUF_HDR_BYTE_1							
R/W							

LEGEND: R/W = Read/Write; R = Read only

表 50. Transmit Buffer Header Byte 1 Register Descriptions

Bit	Field	Type	Reset	Description
7:0	TX_BUF_HDR_BYTE_1	R/W	0x00	Byte 1 (bits 15:8) of USB PD message header.

7.6.46 Transmit Buffer Data Object 1 Through 7 Register (address = 0x54 through 0x6F) [reset = 0x00]

图 54. Transmit Buffer Data Object 1 Through 7 Register

7	6	5	4	3	2	1	0
TX_BUFF_OBJx_BYTE_x							
R/W							

LEGEND: R/W = Read/Write; R = Read only

表 51. Transmit Buffer Data Object 1 Through 7 Register Descriptions

Bit	Field	Type	Reset	Description
7:0	TX_BUFF_OBJx_BYTE_x	R/W	0	TX Byte Data object 1 through 7.

版权 © 2016–2018, Texas Instruments Incorporated

7.6.47 VBUS Voltage Byte 0 Register (address = 0x70) [reset = 0x00]

图 55. VBUS Voltage Byte 0 Register

7	6	5	4	3	2	1	0
VBUS_MEASUREMENT							
RU							

LEGEND: R/W = Read/Write; R = Read only

表 52. VBUS Voltage Byte 0 Descriptions

Bit	Field	Type	Reset	Description
7:0	VBUS_MEASUREMENT	RU	0x00	10-bit measurement of (VBUS / Scale Factor) TCPM multiplies this value by the scale factor to obtain the voltage measurement. All Voltages shall meet ±2% absolute value or ±50 mV, whichever is greater. The lsb is 25 mV.

7.6.48 VBUS Voltage Byte 1 Register (address = 0x71) [reset = 0x00]

图 56. VBUS Voltage Byte 1 Register

7	6	5	4	3	2	1	0
Reserved				SCALE_FACTOR		VBUS_MEASUREMENT[9:8]	
R				R		RU	

LEGEND: R/W = Read/Write; R = Read only

表 53. VBUS Voltage Byte 1 Register Descriptions

Bit	Field	Type	Reset	Description
7:4	Reserved	R	0	Reserved.
3:2	SCALE_FACTOR	R	0	00: VBUS measurement not scaled. 01: VBUS measurement divided by 2 10: VBUS measurement divided by 4 11: reserved
1:0	VBUS_MEASUREMENT[9:8]	RU	0	10-bit measurement of (VBUS / Scale Factor) TCPM multiplies this value by the scale factor to obtain the voltage measurement. All Voltages shall meet ±2% absolute value or ±50 mV, whichever is greater.

7.6.49 VBUS Sink Disconnect Threshold Byte 0 Register (address = 0x72) [reset = 0x00]

When this register is programmed to a non-zero value and AUTO_DISCHARGE_DISCONNECT is enabled, the TUSB422 will use this field instead of VBUS_PRESENT to know when a detach has occurred and then discharge to vSafe0V. This threshold register is disabled if programmed to zero.

图 57. VBUS Sink Disconnect Threshold Byte 0 Register

7	6	5	4	3	2	1	0
VBUS_SNK_DISC_THRESHOLD[7:0]							
R/W							

LEGEND: R/W = Read/Write; R = Read only

表 54. VBUS Sink Disconnect Threshold Byte 0 Register Descriptions

Bit	Field	Type	Reset	Description
7:0	VBUS_SNK_DISC_THRESHOLD[7:0]	R/W	0x00	10-bit for voltage threshold with 25 mV LSB. ±5% accuracy. A value of B9:0=000h disables this threshold

7.6.50 VBUS Sink Disconnect Threshold Byte 1 Register (address = 0x73) [reset = 0x00]

图 58. VBUS Sink Disconnect Threshold Byte 1 Register

7	6	5	4	3	2	1	0
Reserved						VBUS_SNK_DISC_THRESHOLD[9:8]	
R						R/W	

LEGEND: R/W = Read/Write; R = Read only

表 55. VBUS Sink Disconnect Threshold Byte 1 Register Descriptions

Bit	Field	Type	Reset	Description
7:2	Reserved	R	0x00	Reserved
1:0	VBUS_SNK_DISC_THRESHOLD[9:8]	R/W	00	10-bit for voltage threshold with 25 mV LSB. (Default vSafe5V) ±5% accuracy. A value of B9:0=000h disables this threshold

7.6.51 VBUS Stop Discharge Threshold Byte 0 Register (address = 0x74) [reset = 0x00]

When VBUS Stop Discharge Threshold register is programmed to a non-zero value and TUSB422 is a VBUS Source, the TUSB422 will discharge to value programmed into this register. If this register is programmed to all zeros, then TUSB422 will discharge to vSafe0V. If Software requires discharge to voltage other than vSafe0V, then software must program this register to desired voltage. When TUSB422 is a VBUS Sink and a detach occurs, discharge will always stop at vSafe0V.

图 59. VBUS Stop Discharge Threshold Byte 0 Register

7	6	5	4	3	2	1	0
VBUS_STOP_DISCHARGE_THRESHOLD[7:0]							
R/W							

LEGEND: R/W = Read/Write; R = Read only

表 56. VBUS Stop Discharge Threshold Byte 0 Register Descriptions

Bit	Field	Type	Reset	Description
7:0	VBUS_STOP_DISCHARGE_THRESHOLD[7:0]	R/W	0x00	10-bit for voltage threshold with 25 mV LSB.

7.6.52 VBUS Stop Discharge Threshold Byte 1 Register (address = 0x75) [reset = 0x00]

图 60. Stop Discharge Threshold Byte 1 Register

7	6	5	4	3	2	1	0
Reserved						VBUS_STOP_DISCHARGE_THRESHOLD[9:8]	
R						R/W	

LEGEND: R/W = Read/Write; R = Read only

表 57. VBUS Stop Discharge Threshold Byte 1 Register Descriptions

Bit	Field	Type	Reset	Description
7:2	Reserved	R	0x00	Reserved
1:0	VBUS_STOP_DISCHARGE_THRESHOLD[9:8]	R/W	00	10-bit for voltage threshold with 25 mV LSB.

版权 © 2016–2018, Texas Instruments Incorporated

7.6.53 VBUS Voltage Alarm High Config Byte 0 Register (address = 0x76) [reset = 0x00]

This register contains the lower 8 bits of the 10-bit VBUS Voltage Alarm High Configuration register. When DISABLE_VOLTAGE_ALARMS = 1'b0, a VBUS voltage higher than value programmed into this register will cause VBUS_ALARM_HI alert flag to get set. This threshold is always enabled. SW needs to program to a value greater than VBUS to prevent VBUS_ALARM_HI alert from continuously being set.

图 61. VBUS Voltage Alarm High Config Byte 0 Register

7	6	5	4	3	2	1	0
VBUS_ALARM_HIGH_THRESHOLD[7:0]							
R/W							

LEGEND: R/W = Read/Write; R = Read only

表 58. VBUS Voltage Alarm High Config Byte 0 Register Descriptions

Bit	Field	Type	Reset	Description
7:0	ReservedVBUS_ALARM_HIGH_THRESHOLD[7:0]	R/W	0x00	10-bit for voltage threshold with 25 mV LSB. ±5% accuracy.

7.6.54 VBUS Voltage Alarm High Config Byte 1 Register (address = 0x77) [reset = 0x00]

This register contains the upper two bits of the 10-bit VBUS Voltage Alarm High Configuration register. When DISABLE_VOLTAGE_ALARMS = 1'b0, a VBUS voltage higher than value programmed into this register will cause VBUS_ALARM_HI alert flag to get set. This threshold is always enabled. SW needs to program to a value greater than VBUS to prevent VBUS_ALARM_HI alert from continuously being set.

图 62. VBUS Voltage Alarm High Config Byte 1 Register

7	6	5	4	3	2	1	0
Reserved						VBUS_ALARM_HIGH_THRESHOLD[9:8]	
R						R/W	

LEGEND: R/W = Read/Write; R = Read only

表 59. VBUS Voltage Alarm High Config Byte 1 Register Descriptions

Bit	Field	Type	Reset	Description
7:2	Reserved	R	0x00	Reserved
1:0	VBUS_ALARM_HIGH_THRESHOLD[9:8]	R/W	0x00	10-bit for voltage threshold with 25 mV LSB. ±5% accuracy.

7.6.55 VBUS Voltage Alarm Low Config Byte 0 Register (address = 0x78) [reset = 0x00]

This register contains the lower 8 bits of the 10-bit VBUS Voltage Alarm Low Configuration register. When DISABLE_VOLTAGE_ALARMS = 1'b0, a VBUS voltage lower than value programmed into this register will cause VBUS_ALARM_LO alert flag to get set.

图 63. VBUS Voltage Alarm Low Config Byte 0 Register

7	6	5	4	3	2	1	0
VBUS_ALARM_LOW_THRESHOLD[7:0]							
R/W							

LEGEND: R/W = Read/Write; R = Read only

表 60. VBUS Voltage Alarm Low Config Byte 0 Register Descriptions

Bit	Field	Type	Reset	Description
7:0	VBUS_ALARM_LOW_THRESHOLD[7:0]	R/W	0x00	10-bit for voltage threshold with 25 mV LSB. ±5% accuracy.

7.6.56 VBUS Voltage Alarm Low Config Byte 1 Register (address = 0x79) [reset = 0x00]

This register contains the upper two bits of the 10-bit VBUS Voltage Alarm Low Configuration register. When DISABLE_VOLTAGE_ALARMS = 1'b0, a VBUS voltage lower than value programmed into this register will cause VBUS_ALARM_LO alert flag to get set.

图 64. VBUS Voltage Alarm Low Config Byte 1 Register

7	6	5	4	3	2	1	0
Reserved						VBUS_ALARM_LOW_THRESHOLD[9:8]	
R						R/W	

LEGEND: R/W = Read/Write; R = Read only

表 61. VBUS Voltage Alarm Low Config Byte 1 Register Descriptions

Bit	Field	Type	Reset	Description
7:2	Reserved	R	0x00	Reserved
1:0	VBUS_ALARM_LOW_THRESHOLD[9:8]	R/W	0x00	10-bit for voltage threshold with 25 mV LSB. ±5% accuracy.

7.6.57 Vendor Interrupts Status Register (address = 0x90) [reset = 0x00]

图 65. Vendor Interrupts Status Register

7	6	5	4	3	2	1	0
Reserved			LFO_TIMER_STAT	CC_FAULT	OTSD_STAT	Reserved	
R			RCU	RCU	R	R	

LEGEND: R/W = Read/Write; R = Read only

表 62. Vendor Interrupts Status Register Descriptions

Bit	Field	Type	Reset	Description
7:5	Reserved	R	0000	Reserved
4	LFO_TIMER_STAT	RCU	0	0b: LFO Timer not expired or disabled. 1b: LFO Timer expired.
3	CC_FAULT	RCU	0	Set when TUSB422 detects CC pin greater than 3.5 V in unattached state. This typically will indicate a CC to VBUS short. 0b: CC Fault not detected. 1b: CC Fault detected
2	OTSD_STAT	RCU	0	0b: OTSD not detected. 1b: OTSD detected.
1:0	Reserved	R	0	Reserved

版权 © 2016–2018, Texas Instruments Incorporated

7.6.58 Vendor Interrupts Mask Register (address = 0x92) [reset = 0x00]

图 66. Vendor Interrupts Mask Register

7	6	5	4	3	2	1	0
Reserved			LFO_TIMER_MASK	CC_FAULT_MASK	OTSD_MASK	Reserved	
R			R/W	R/W	R/W	R/W	

LEGEND: R/W = Read/Write; R = Read only

表 63. Vendor Interrupts Mask Register Descriptions

Bit	Field	Type	Reset	Description
7:5	Reserved	R	000	Reserved
4	LFO_TIMER_MASK	R/W	0	0b: Interrupt masked. 1b: Interrupt unmasked
3	CC_FAULT_MASK	R/W	0	0b: Interrupt masked. 1b: Interrupt unmasked
2	OTSD_MASK	R/W	0	0b: Interrupt masked. 1b: Interrupt unmasked
1:0	Reserved	R/W	0	Reserved

7.6.59 CC General Control Register (address = 0x94) [reset = 0x04]

图 67. CC General Control Register

7	6	5	4	3	2	1	0
ALERT_CLEAR_READ	PD_TXRX_RESET	GLOBAL_SW_RESET	AUTO_DRP_SAMPLE_CTL	CC_SAMPLE_RATE		DRP_DUTY_CYCLE	
R						R/W	

LEGEND: R/W = Read/Write; R = Read only

表 64. CC General Control Register Descriptions

Bit	Field	Type	Reset	Description
7	ALERT_CLEAR_READ	R	0	This field controls whether Status registers are cleared by write of 1'b0 (RCU) or are cleared after reading them (RAU). The registers affected by this field as the following: Alert Byte 0, Alert Byte 1, Fault Status, and Vendor Interrupts Status registers. The RX_SOP_STATUS in Alert register is not affected by this register. 0 – Alert Status flags are cleared by write of 1'b1 (RCU). 1 – Alert Status flags are cleared after reading corresponding status register (RAU).
6	PD_TXRX_RESET	R/W	0	When SW writes this field with a 1'b1, TUSB422 PD TX and RX state machines is reset . The TUSB422 clears this field upon reset completion. The TUSB422 behavior is similar to receiving a hard reset message. 0b: Normal. 1b: PD_TXRX reset.
5	GLOBAL_SW_RESET	R/W	0	When SW writes this field with a 1'b1, the TUSB422's will be reset, CSRs included, to power-on defaults. The TUSB422 will clear this field upon reset completion. SW must reinitialize the TUSB422 upon completion of Global reset 0b: Normal. 1b: Global Reset.
4	AUTO_DRP_SAMPLE_CTL	R/W	0	When TUSB422 is enabled for autonomous DRP toggle, this field controls when CC pins are sampled while unattached. 0b: Continuously checks CC pins based on CC_SAMPLE_RATE field. 1b: Only checks CC pins just before Role toggle.
3:2	CC_SAMPLE_RATE	R/W	01	This field controls the TUSB422 CC pins sample rate. 00b: 1 ms (typ) 01b: 2 ms (typ) 10b: 8 ms (typ) 11b: 16 ms (typ)
1:0	DRP_DUTY_CYCLE	R/W	00	Percent of time that DRP advertises DFP during t_{DRP}. 00b: 30% (typ) 01b: 10% (typ) 10b: 50% (typ) 11b: 60% (typ)

版权 © 2016–2018, Texas Instruments Incorporated

7.6.60 PHY BMC TX Control Register (address = 0x95) [reset = 0x00]

图 68. PHY BMC TX Control Register

7	6	5	4	3	2	1	0
Reserved					TX_CARRIER_MODE2_SEL	TX_FAST_ROLE_SWAP	Reserved
R					R/W	RSU	R

LEGEND: R/W = Read/Write; R = Read only

表 65. PHY BMC TX Control Register Descriptions

3	Field	Type	Reset	Description
7:3	Reserved	R	0	Reserved
2	TX_CARRIER_MODE2_SEL	R/W	0	0b: TX BIST Carrier Mode 2 only for $t_{BISTContMode}$ 1b: TX BIST Carrier Mode 2 continuously.
1	TX_FAST_ROLE_SWAP	RSU	0	0b: Normal operation. 1b: TX a Fast Role Swap.
0	Reserved	R	0	Reserved

7.6.61 PHY BMC RX Control Register (address = 0x96) [reset = 0x00]

图 69. PHY BMC RX Control Register

7	6	5	4	3	2	1	0
Reserved				Reserved	VIX_PD_OVERRIDE	VIX_PD	
R				R/W	R/W	R/W	

LEGEND: R/W = Read/Write; R = Read only

表 66. PHY BMC RX Control Register Descriptions

Bit	Field	Type	Reset	Description
7:4	Reserved	R	0	Reserved
3	Reserved	R/W	0	Reserved
2	VIX_PD_OVERRIDE	R/W	0	0b: BMC RX threshold is controlled by POWER_ROLE field. 1b: BMC RX threshold is control by value of VIX_PD field.
1:0	VIX_PD	R/W	00	00b: BMC RX set to $V_{IH(PD_SNK)}$ and $V_{IL(PD_SNK)}$. 01b: BMC RX set to $V_{IH(PD_SRC)}$ and $V_{IL(PD_SRC)}$. 10b: BMC RX set to $V_{IH(PD_NEU)}$ and $V_{IL(PD_NEU)}$. 11b: BMC RX set to $V_{IH(PD_SNK)}$ and $V_{IL(PD_SRC)}$.

7.6.62 PHY BMC RX Status Register (address = 0x97) [reset = 0x00]

图 70. PHY BMC RX Status Register

7	6	5	4	3	2	1	0
Reserved				RX_PREAMBLE_STAT	RX_CRC_OK_STAT	RX_EOP_STAT	RX_SOP_STAT
R				RU	RU	RU	RU

LEGEND: R/W = Read/Write; R = Read only

表 67. PHY BMC RX Status Register Descriptions

Bit	Field	Type	Reset	Description
7:4	Reserved	R	0	Reserved
3	RX_PREAMBLE_STAT	RU	0	0b: Preamble not received. 1b: Preamble received.
2	RX_CRC_OK_STAT	RU	0	0b: CRC not ok. 1b: CRC ok.
1	RX_EOP_STAT	RU	0	0b: EOP not received . 1b: EOP received.
0	RX_SOP_STAT	RU	0	0b: SOP not received 1b: SOP received.

7.6.63 VBUS and VCONN Control Register (address = 0x98) [reset = 0x00]

图 71. VBUS and VCONN Control Register

7	6	5	4	3	2	1	0
Reserved						INT_VCONNDIS_DISABLE	INT_VBUSDIS_DISABLE
R						R/W	R/W

LEGEND: R/W = Read/Write; R = Read only

表 68. VBUS and VCONN Control Descriptions

Bit	Field	Type	Reset	Description
7:2	Reserved	R	0	Reserved
1	INT_VCONNDIS_DISABLE	R/W	0	When a VCONN discharge condition occurs, this register controls whether TUSB422 internal VCONN discharge circuit is used or not. When not used, it is assumed that VCONN discharge is handled external to TUSB422. 0b: Internal VCONN discharge enable 1b: Internal VCONN discharge disabled.
0	INT_VBUSDIS_DISABLE	R/W	0	When a VBUS discharge condition occurs, this register controls whether TUSB422 internal VBUS discharge circuit is used or not. When not used, it is assumed that VBUS discharge is handled external to TUSB422. 0b: Internal VBUS discharge enable 1b: Internal VBUS discharge disabled.

版权 © 2016–2018, Texas Instruments Incorporated

7.6.64 OTSD Control Register (address = 0x99) [reset = 0x00]

图 72. OTSD Control Register

7	6	5	4	3	2	1	0
Reserved			OTSD_RAW_STATUS	Reserved			OTSD_EN
R			RU	R			R/W

LEGEND: R/W = Read/Write; R = Read only

表 69. OTSD Control Register Descriptions

Bit	Field	Type	Reset	Description
7:5	Reserved	R	0	Reserved
4	OTSD_RAW_STATUS	RU	0	This field represents the raw status of the OTSD.
3:1	Reserved	R	0	Reserved
0	OTSD_EN	R/W	0	0b: Disabled 1b: Enabled

7.6.65 LFO Timer Low Register (address = 0xA0) [reset = 0x00]

The value programmed into 16-bit LFP timer will not get applied until LFO Timer High register is written. The value of this register will always return the value written to it; and therefore, after the timer is enabled this register will not reflect the actual LFP timer value.

图 73. LFO Timer Low Register

7	6	5	4	3	2	1	0
LFO_TIMER_LO							
R/W							

LEGEND: R/W = Read/Write; R = Read only

表 70. LFO Timer Low Register Descriptions

Bit	Field	Type	Reset	Description
7:0	LFO_TIMER_LO	R/W	0x00	Lower 8-bits of the 16-bit LFO Timer. When LFO timer is set to a non-zero value, the timer is enabled and start counting to zero. Upon reaching zero, the LFO_TIMER_STAT flag is set. Timer can be disabled by programming LFP_TIMER to zero. LSB is 1000 µs.

7.6.66 LFO Timer High Register (address = 0xA1) [reset = 0x00]

The value programmed into 16-bit LFP timer will not get applied until LFO Timer High register is written. The value of this register will always return the value written to it and therefore after the timer is enabled this register will not reflect the actual LFP timer value.

图 74. LFO Timer High Register

7	6	5	4	3	2	1	0
LFO_TIMER_HI							
R/W							

LEGEND: R/W = Read/Write; R = Read only

表 71. LFO Timer High Register Descriptions

Bit	Field	TypeW	Reset	Description
7:0	LFO_TIMER_HI	R/W	0x00	Upper 8-bits of the 16-bit LFO Timer. When LFO timer is set to a non-zero value, the timer is enabled and start counting to zero. Upon reaching zero, the LFO_TIMER_STATUS flag is set. Timer can be disabled by programming LFP_TIMER to zero.

7.6.67 Page Select Register (address = 0xFF) [reset = 0x00]

图 75. Page Select Register

7	6	5	4	3	2	1	0
Reserved							PAGE_SELECT
R							R/W

LEGEND: R/W = Read/Write; R = Read only

表 72. Page Select Register Descriptions

Bit	Field	Type	Reset	Description
7:1	Reserved	R	0	Reserved
0	PAGE_SELECT	R/W	0	0b: Page 0 1b: Page 1 (TI Test Registers)

版权 © 2016–2018, Texas Instruments Incorporated

8 Application and Implementation

注

Information in the following applications sections is not part of the TI component specification, and TI does not warrant its accuracy or completeness. TI's customers are responsible for determining suitability of components for their purposes. Customers should validate and test their design implementation to confirm system functionality.

8.1 Application Information

图 76 is for the TUSB422 in WLCSP package configured in DRP mode.

8.2 Typical Application

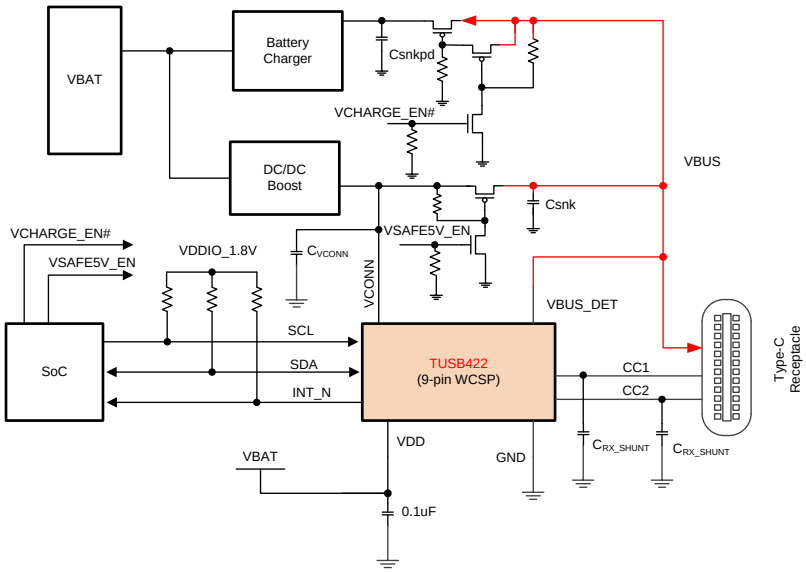

图 76. TUSB422 in DRP Application

8.2.1 Design Requirements

For this design example, use the parameters shown in 表 73.

表 73. Design Parameters

PARAMETER	VALUE
V_{DD} supply (2.7 V to 5.5 V)	VBAT
$V_{(CC1/CC2)}$, Minimum Voltage on CC1/CC2 when VCONN switch is closed.	3 V
Minimum $V_{(VCONN)}$ power	1 Watt
I^2C Level (1.8 V or 3.3 V)	1.8 V
Max I^2C bus capacitance	150 pF
I^2C Speed (400 KHz or 1 MHz).	400 KHz
External pull-up resistor on SDA and SCL.	1.5 KΩ
External pull-up resistor on INT_N	200 KΩ
CRX_SHUNT (200 pF to 450 pF)	220 pF
$C_{(VCONN)}$	10 µF

8.2.2 Detailed Design Procedure

The TUSB422 supports a large V_{DD} supply range allowing it to be powered from an external battery (VBAT).

The TUSB422 I^2C slave interface supports up to 1 MHz (Fast Mode+) at either 1.8 V or 3.3 V signal levels. Depending on the signaling level of the I^2C master, the TUSB422 SDA and SCL should be pulled up to either 1.8 V or 3.3 V. For this particular example, the SDA and SCL are pulled up to 1.8 V. The actual pullup resistor value chosen is based maximum I^2C bus capacitance and the maximum I^2C frequency. A 1.5 KΩ resistor was chosen to support a 150 pF maximum I^2C bus capacitance and a 400 KHz I^2C clock.

The INT_N pin is used by the TUSB422 to communicate events to software running on an external CPU. This pin requires an external pull-up resistor to 1.8 V, 3.3 V, or TUSB422 V_{DD} supply. Typically, INT_N is pulled up to the same supply as the SDA and SCL pins. The recommend pull-up value is 200 KΩ.

The USB Type-C specification uses VCONN to power Type-C active cables and cable plugs. The minimum VCONN power mandated by the specification is 1 W. The TUSB422 incorporates an internal switch to route power from VCONN pin to one of the CC pins (CC1 or CC2). A recent ECN for VCONN redefines VCONN voltage range to 3 V — 5.5 V from the originally defined 4.75 V — 5.5 V. Given TUSB422 maximum $R_{ds(on)}$ and the minimum $I_{(VCONN)}$ current, the allowable VCONN power through the TUSB422 is derived by 公式 1.

$$(V_{(VCONN)} - V_{(VCC1/CC2)}) / R_{ds(on)}(max) < I_{(VCONN)}\ (min) \quad (1)$$

where:

- where $V_{(VCONN)}$ represents voltage on VCONN pin.
- $V_{(VCONN)}$ is voltage on CC pins.
- $R_{ds(on)}$ (max) is VCONN switch maximum ON resistance,
- and $I_{(VCONN)}$ (min) is the minimum VCONN current fault threshold.

For this example, to support the minimum Type-C $V_{(VCONN)}$ requirement (1 Watt at 3 V), the voltage on the VCONN pin must be greater than 3.25 Volts [(0.333 A x 0.75 Ω) + 3 V]. If system designer desires to support the old VCONN requirement of 1 W at 4.75 V, then the voltage on the VCONN pin must be greater than 4.9 volts [(0.21 A x 0.75 Ω) + 4.75 V].

8.2.3 Application Curve

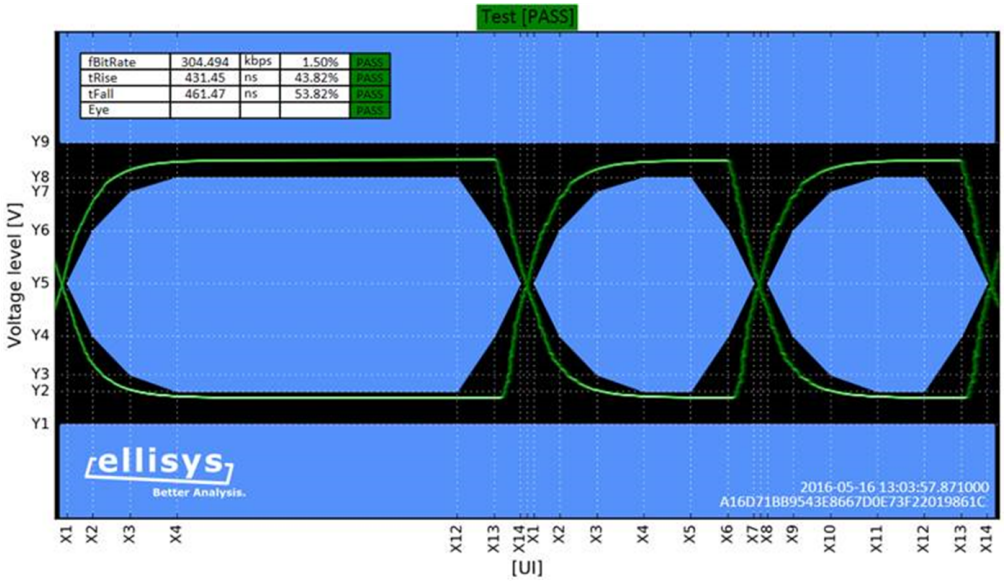

图 77. USB PD Tx Eye

版权 © 2016–2018, Texas Instruments Incorporated

9 Power Supply Recommendations

The TUSB422 has a wide power supply range from 2.7 V — 5.5 V.

General Power up Sequence for TUSB422:

- System is powered off (device has no V_{DD}).
- V_{DD} ramps
- TUSB422 asserts INT_N low when initial initialization is complete.
- Software can then start configuring the TUSB422.

10 Layout

10.1 Layout Guidelines

1. Trace width and thickness size for CC1, CC2, and VCONN should be set to meet at least 1 Watt.
2. A 0.1 µF capacitor should be placed as close as possible to TUSB422 V_{DD} pin.

图 78 shows via-in-pad for inner pad B2. This is due to the tight placing between two pads. If PCB manufacturing restrictions allows for very small width traces like 2 mils, then via-in-pad is not needed.

10.2 Layout Example

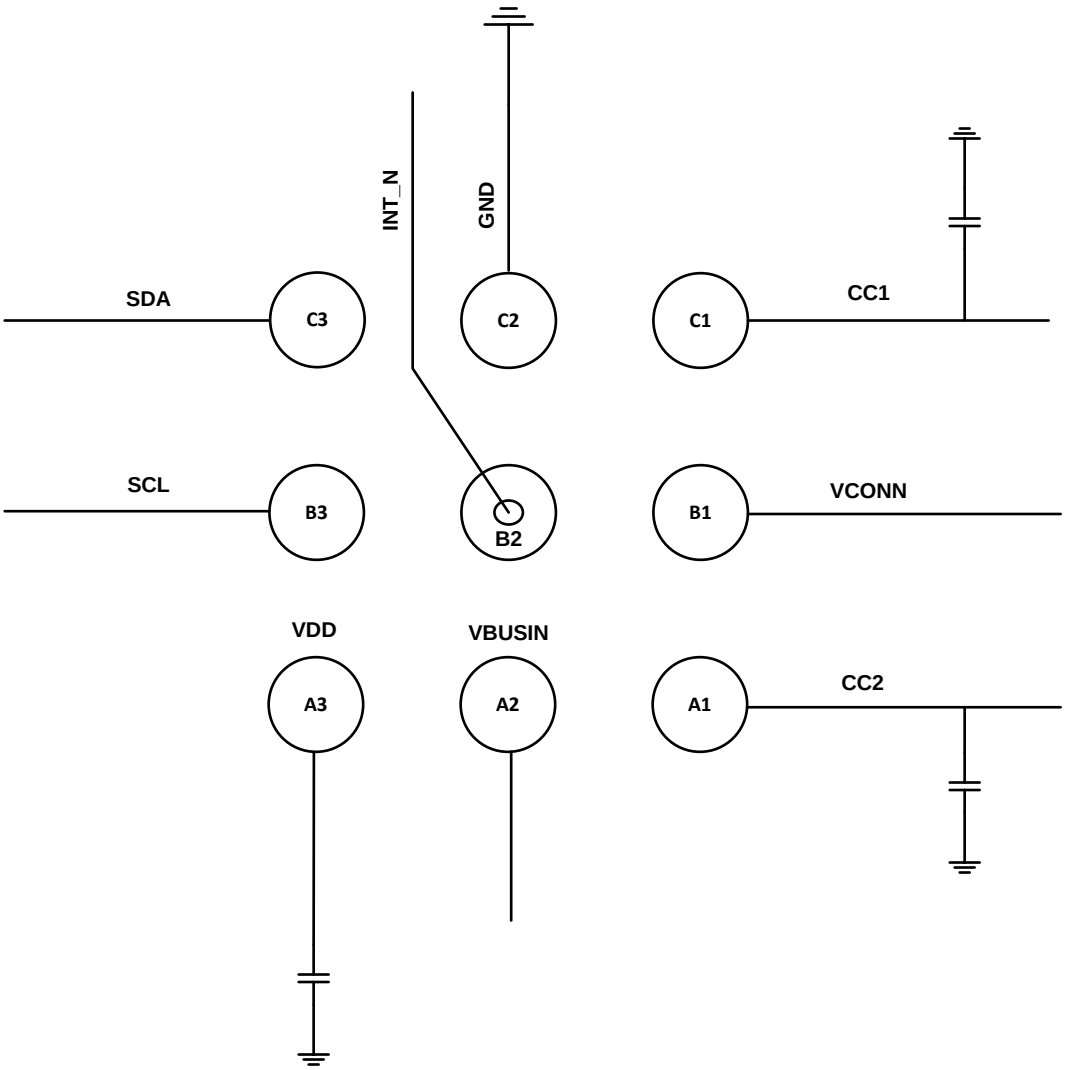

图 78. Example Layout

版权 © 2016–2018, Texas Instruments Incorporated

11 器件和文档支持

11.1 接收文档更新通知

要接收文档更新通知，请导航至 TI.com.cn 上的器件产品文件夹。单击右上角的*通知我* 进行注册，即可每周接收产品信息更改摘要。有关更改的详细信息，请查看任何已修订文档中包含的修订历史记录。

11.2 社区资源

下列链接提供到 TI 社区资源的连接。链接的内容由各个分销商"按照原样"提供。这些内容并不构成 TI 技术规范，并且不一定反映 TI 的观点；请参阅 TI 的 《使用条款》。

TI E2E™ 在线社区 ***TI 的工程师对工程师 (E2E) 社区。***此社区的创建目的在于促进工程师之间的协作。在 e2e.ti.com 中，您可以咨询问题、分享知识、拓展思路并与同行工程师一道帮助解决问题。

设计支持 ***TI 参考设计支持*** 可帮助您快速查找有帮助的 E2E 论坛、设计支持工具以及技术支持的联系信息。

11.3 商标

E2E is a trademark of Texas Instruments.
USB Type-C is a trademark of USB Implementers Forum.
All other trademarks are the property of their respective owners.

11.4 静电放电警告

ESD 可能会损坏该集成电路。德州仪器 (TI) 建议通过适当的预防措施处理所有集成电路。如果不遵守正确的处理措施和安装程序，可能会损坏集成电路。

ESD 的损坏小至导致微小的性能降级，大至整个器件故障。 精密的集成电路可能更容易受到损坏，这是因为非常细微的参数更改都可能会导致器件与其发布的规格不相符。

11.5 术语表

SLYZ022 — *TI 术语表*。

这份术语表列出并解释术语、缩写和定义。

12 机械、封装和可订购信息

以下页面包含机械、封装和可订购信息。这些信息是指定器件的最新可用数据。数据如有变更，恕不另行通知，且不会对此文档进行修订。如需获取此产品说明书的浏览器版本，请参阅左侧的导航栏。

版权 © 2016–2018, Texas Instruments Incorporated

TUSB422IYFP

YFP0009-C01

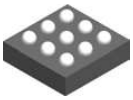

PACKAGE OUTLINE

DSBGA - 0.5 mm max height

DIE SIZE BALL GRID ARRAY

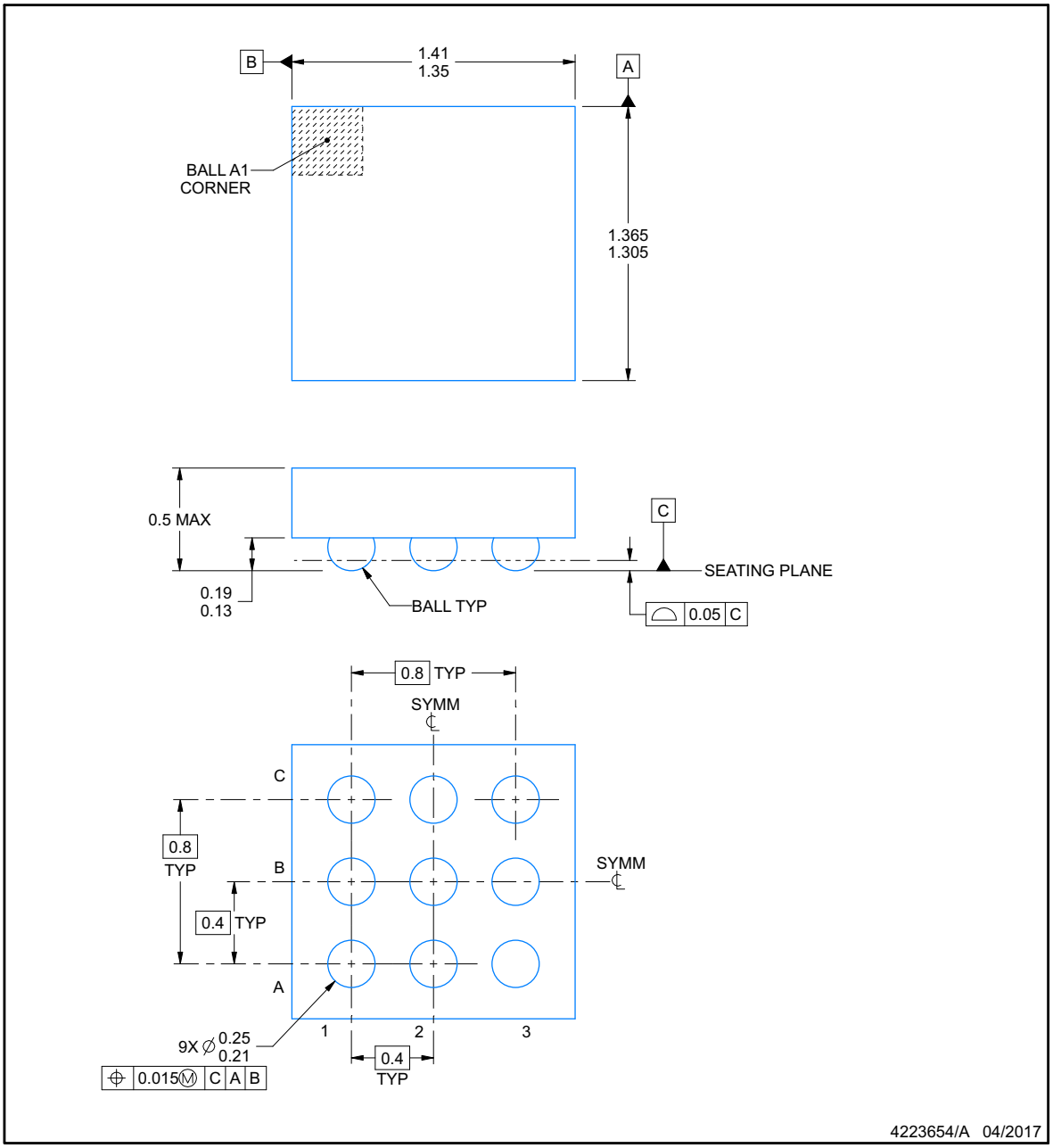

NOTES:

1. All linear dimensions are in millimeters. Any dimensions in parenthesis are for reference only. Dimensioning and tolerancing per ASME Y14.5M.
2. This drawing is subject to change without notice.

版权 © 2016–2018, Texas Instruments Incorporated

TUSB422IYFP

EXAMPLE BOARD LAYOUT

YFP0009-C01

DSBGA - 0.5 mm max height

DIE SIZE BALL GRID ARRAY

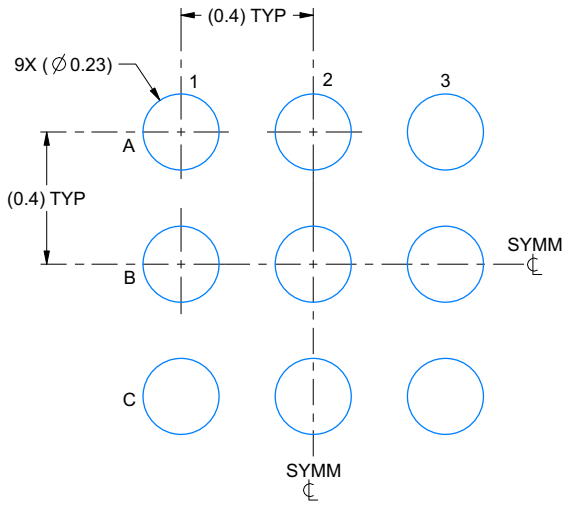

LAND PATTERN EXAMPLE
EXPOSED METAL SHOWN
SCALE:50X

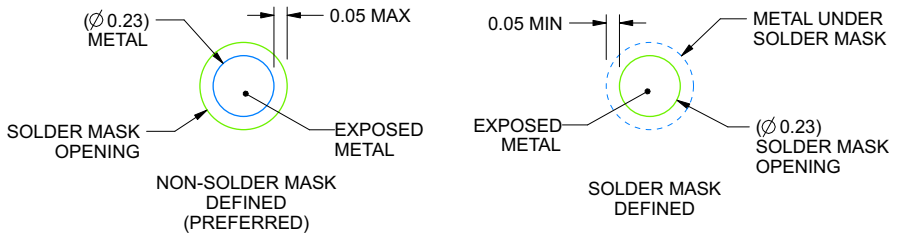

SOLDER MASK DETAILS
NOT TO SCALE

4223654/A 04/2017

NOTES: (continued)

3. Final dimensions may vary due to manufacturing tolerance considerations and also routing constraints. For more information, see Texas Instruments literature number SNVA009 (www.ti.com/lit/snva009).

版权 © 2016–2018, Texas Instruments Incorporated

TUSB422IYFP

EXAMPLE STENCIL DESIGN

YFP0009-C01

DSBGA - 0.5 mm max height

DIE SIZE BALL GRID ARRAY

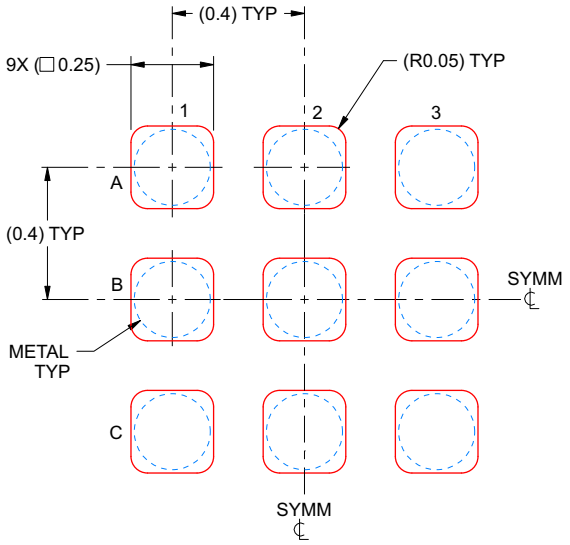

SOLDER PASTE EXAMPLE
BASED ON 0.1 mm THICK STENCIL
SCALE:50X

4223654/A 04/2017

NOTES: (continued)

4. Laser cutting apertures with trapezoidal walls and rounded corners may offer better paste release.

版权 © 2016–2018, Texas Instruments Incorporated

PACKAGING INFORMATION

Orderable Device	Status (1)	Package Type	Package Drawing	Pins	Package Qty	Eco Plan (2)	Lead finish/ Ball material (6)	MSL Peak Temp (3)	Op Temp (°C)	Device Marking (4/5)	Samples
TUSB422IYFPR	ACTIVE	DSBGA	YFP	9	3000	RoHS & Green	SNAGCU	Level-1-260C-UNLIM	-40 to 85	422	Samples
TUSB422IYFPT	ACTIVE	DSBGA	YFP	9	250	RoHS & Green	SNAGCU	Level-1-260C-UNLIM	-40 to 85	422	Samples

(1) The marketing status values are defined as follows:
ACTIVE: Product device recommended for new designs.
LIFEBUY: TI has announced that the device will be discontinued, and a lifetime-buy period is in effect.
NRND: Not recommended for new designs. Device is in production to support existing customers, but TI does not recommend using this part in a new design.
PREVIEW: Device has been announced but is not in production. Samples may or may not be available.
OBSOLETE: TI has discontinued the production of the device.

(2) **RoHS:** TI defines "RoHS" to mean semiconductor products that are compliant with the current EU RoHS requirements for all 10 RoHS substances, including the requirement that RoHS substance do not exceed 0.1% by weight in homogeneous materials. Where designed to be soldered at high temperatures, "RoHS" products are suitable for use in specified lead-free processes. TI may reference these types of products as "Pb-Free".
RoHS Exempt: TI defines "RoHS Exempt" to mean products that contain lead but are compliant with EU RoHS pursuant to a specific EU RoHS exemption.
Green: TI defines "Green" to mean the content of Chlorine (Cl) and Bromine (Br) based flame retardants meet JS709B low halogen requirements of <=1000ppm threshold. Antimony trioxide based flame retardants must also meet the <=1000ppm threshold requirement.

(3) MSL, Peak Temp. - The Moisture Sensitivity Level rating according to the JEDEC industry standard classifications, and peak solder temperature.

(4) There may be additional marking, which relates to the logo, the lot trace code information, or the environmental category on the device.

(5) Multiple Device Markings will be inside parentheses. Only one Device Marking contained in parentheses and separated by a "~" will appear on a device. If a line is indented then it is a continuation of the previous line and the two combined represent the entire Device Marking for that device.

(6) Lead finish/Ball material - Orderable Devices may have multiple material finish options. Finish options are separated by a vertical ruled line. Lead finish/Ball material values may wrap to two lines if the finish value exceeds the maximum column width.

Important Information and Disclaimer: The information provided on this page represents TI's knowledge and belief as of the date that it is provided. TI bases its knowledge and belief on information provided by third parties, and makes no representation or warranty as to the accuracy of such information. Efforts are underway to better integrate information from third parties. TI has taken and continues to take reasonable steps to provide representative and accurate information but may not have conducted destructive testing or chemical analysis on incoming materials and chemicals. TI and TI suppliers consider certain information to be proprietary, and thus CAS numbers and other limited information may not be available for release.

In no event shall TI's liability arising out of such information exceed the total purchase price of the TI part(s) at issue in this document sold by TI to Customer on an annual basis.

TAPE AND REEL INFORMATION

REEL DIMENSIONS

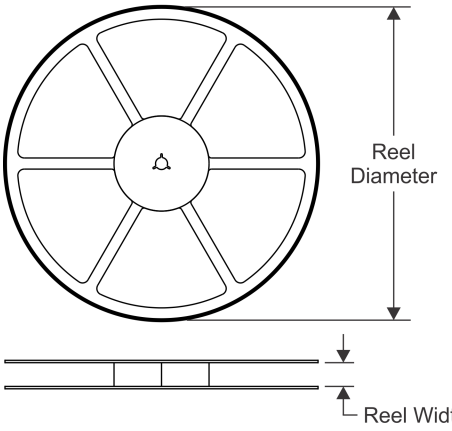

TAPE DIMENSIONS

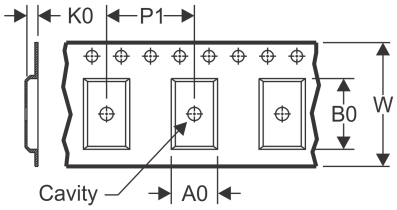

A0	Dimension designed to accommodate the component width
B0	Dimension designed to accommodate the component length
K0	Dimension designed to accommodate the component thickness
W	Overall width of the carrier tape
P1	Pitch between successive cavity centers

QUADRANT ASSIGNMENTS FOR PIN 1 ORIENTATION IN TAPE

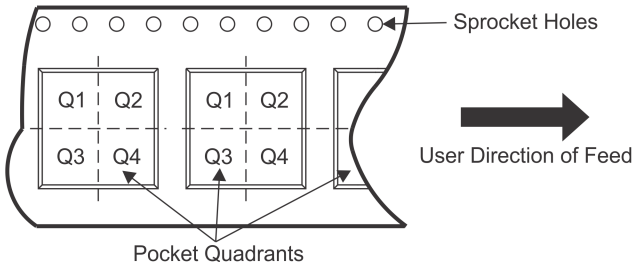

*All dimensions are nominal

Device	Package Type	Package Drawing	Pins	SPQ	Reel Diameter (mm)	Reel Width W1 (mm)	A0 (mm)	B0 (mm)	K0 (mm)	P1 (mm)	W (mm)	Pin1 Quadrant
TUSB422IYFPR	DSBGA	YFP	9	3000	180.0	8.4	1.5	1.45	0.6	4.0	8.0	Q1
TUSB422IYFPT	DSBGA	YFP	9	250	180.0	8.4	1.5	1.45	0.6	4.0	8.0	Q1

TAPE AND REEL BOX DIMENSIONS

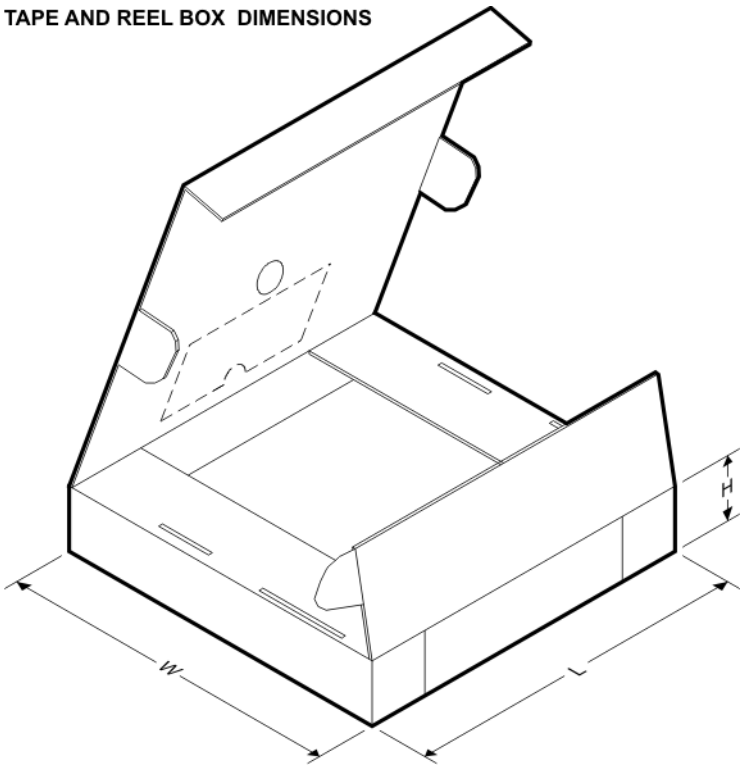

*All dimensions are nominal

Device	Package Type	Package Drawing	Pins	SPQ	Length (mm)	Width (mm)	Height (mm)
TUSB422IYFPR	DSBGA	YFP	9	3000	182.0	182.0	20.0
TUSB422IYFPT	DSBGA	YFP	9	250	182.0	182.0	20.0

重要声明和免责声明

TI 均以“原样”提供技术性及可靠性数据（包括数据表）、设计资源（包括参考设计）、应用或其他设计建议、网络工具、安全信息和其他资源，不保证其中不含任何瑕疵，且不做任何明示或暗示的担保，包括但不限于对适销性、适合某特定用途或不侵犯任何第三方知识产权的暗示担保。

所述资源可供专业开发人员应用TI 产品进行设计使用。您将对以下行为独自承担全部责任：(1) 针对您的应用选择合适的TI 产品；(2) 设计、验证并测试您的应用；(3) 确保您的应用满足相应标准以及任何其他安全、安保或其他要求。所述资源如有变更，恕不另行通知。TI 对您使用所述资源的授权仅限于开发资源所涉及TI 产品的相关应用。除此之外不得复制或展示所述资源，也不提供其它TI或任何第三方的知识产权授权许可。如因使用所述资源而产生任何索赔、赔偿、成本、损失及债务等，TI对此概不负责，并且您须赔偿由此对TI 及其代表造成的损害。

TI 所提供产品均受TI 的销售条款 (http://www.ti.com.cn/zh-cn/legal/termsofsale.html) 以及ti.com.cn上或随附TI产品提供的其他可适用条款的约束。TI提供所述资源并不扩展或以其他方式更改TI 针对TI 产品所发布的可适用的担保范围或担保免责声明。

邮寄地址：上海市浦东新区世纪大道 1568 号中建大厦 32 楼，邮政编码：200122
Copyright © 2020 德州仪器半导体技术（上海）有限公司