

SBVS001D − OCTOBER 1992 − REVISED JULY 2004

800mA and 1A Low Dropout Positive Regulator 1.8V, 2.5V, 2.85, 3.3V, 5V, and Adjustable

FEATURES

- **FIXED AND ADJUSTABLE VERSIONS**
- **2.85V MODEL FOR SCSI-2 ACTIVE TERMINATION**
- **OUTPUT CURRENT:**
  REG1117: 800mA max
  REG1117A: 1A max
- **OUTPUT TOLERANCE: ±1% max**
- **DROPOUT VOLTAGE:**
  REG1117: 1.2V max at I_O = 800mA
  REG1117A: 1.3V max at I_O = 1A
- **INTERNAL CURRENT LIMIT**
- **THERMAL OVERLOAD PROTECTION**
- **SOT-223 AND DDPAK SURFACE-MOUNT PACKAGES**

APPLICATIONS

- **SCSI-2 ACTIVE TERMINATION**
- **HAND-HELD DATA COLLECTION DEVICES**
- **HIGH EFFICIENCY LINEAR REGULATORS**
- **BATTERY-POWERED INSTRUMENTATION**
- **BATTERY MANAGEMENT CIRCUITS FOR NOTEBOOK AND PALMTOP PCs**
- **CORE VOLTAGE SUPPLY: FPGA, PLD, DSP, CPU**

DESCRIPTION

The REG1117 is a family of easy-to-use three-terminal voltage regulators. The family includes a variety of fixed- and adjustable-voltage versions, two currents (800mA and 1A) and two package types (SOT-223 and DDPAK). See the chart below for available options.

Output voltage of the adjustable versions is set with two external resistors. The REG1117 low dropout voltage allows its use with as little as 1V input-output voltage differential.

Laser trimming assures excellent output voltage accuracy without adjustment. An NPN output stage allows output stage drive to contribute to the load current for maximum efficiency.

	800mA		1A	
VOLTAGE	**SOT-223**	**DDPAK**	**SOT-223**	**DDPAK**
1.8V			✓	✓
2.5V			✓	✓
2.85V	✓			
3.3V	✓	✓		
5V	✓			✓
Adjustable	✓		✓	✓

Please be aware that an important notice concerning availability, standard warranty, and use in critical applications of Texas Instruments semiconductor products and disclaimers thereto appears at the end of this data sheet.

All trademarks are the property of their respective owners.

PRODUCTION DATA information is current as of publication date. Products conform to specifications per the terms of Texas Instruments standard warranty. Production processing does not necessarily include testing of all parameters.

Copyright © 1992−2004, Texas Instruments Incorporated

ABSOLUTE MAXIMUM RATINGS(1)

Power Dissipation	Internally Limited
Input Voltage	+15V
Operating Junction Temperature Range	−40°C to +125°C
Storage Temperature Range	−65°C to +150°C
Lead Temperature (soldering, 10s)(2)	+300°C

(1) Stresses above these ratings may cause permanent damage.
(2) See *Soldering Methods* section.

This integrated circuit can be damaged by ESD. Texas Instruments recommends that all integrated circuits be handled with appropriate precautions. Failure to observe proper handling and installation procedures can cause damage.

ESD damage can range from subtle performance degradation to complete device failure. Precision integrated circuits may be more susceptible to damage because very small parametric changes could cause the device not to meet its published specifications.

CONNECTION DIAGRAM

Front View

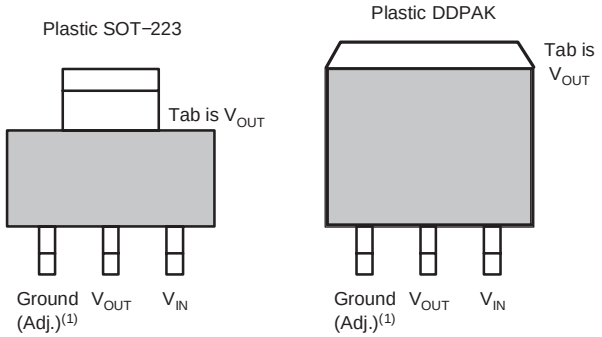

NOTE: (1) Adjustable−Voltage Model.

PACKAGE/ORDERING INFORMATION(1)

PRODUCT	V_O/I_O	PACKAGE-LEAD	PACKAGE DESIGNATOR	OPERATING TEMPERATURE RANGE	PACKAGE MARKING	ORDERING NUMBER	TRANSPORT MEDIA, QUANTITY
REG1117-2.85	2.85/800mA	SOT223-3	DCY	−40°C to +125°C	BB11172	REG1117-2.85	Rails, 80
						REG1117-2.85	Tape and Reel, 2500
REG1117-3.3	3.3/800mA	SOT223-3	DCY	−40°C to +125°C	BB11174	REG1117-3.3	Rails, 80
						REG1117-3.3	Tape and Reel, 2500
REG1117F-3.3	3.3/800mA	DDPAK-3	KTT	−40°C to +125°C	BB1117F4	REG1117F-3.3KTTT	Tape and Reel, 50
						REG1117F-3.3/500	Tape and Reel, 500
REG1117-5	5V/800mA	SOT223-3	DCY	−40°C to +125°C	BB11175	REG1117-5	Rails, 80
						REG1117-5	Tape and Reel, 2500
REG1117	Adj./800mA	SOT223-3	DCY	−40°C to +125°C	BB1117	REG1117	Rails, 80
						REG1117	Tape and Reel, 2500
REG1117A-1.8	1.8V/1A	SOT223-3	DCY	−40°C to +125°C	R111718	REG1117A-1.8	Rails, 80
						REG1117A-1.8	Tape and Reel, 2500
REG1117FA-1.8	1.8/1A	DDPAK-3	KTT	−40°C to +125°C	REG1117FA1.8	REG1117FA-1.8KTTT	Tape and Reel, 50
						REG1117FA-1.8/500	Tape and Reel, 500
REG1117A-2.5	2.5/1A	SOT223-3	DCY	−40°C to +125°C	R111725	REG1117A-2.5	Rails, 80
						REG1117A-2.5	Tape and Reel, 2500
REG1117FA-2.5	2.5/1A	DDPAK-3	KTT	−40°C to +125°C	REG1117FA2.5	REG1117FA-2.5KTTT	Tape and Reel, 50
						REG1117FA-2.5/500	Tape and Reel, 500
REG1117FA-5	5/1A	DDPAK-3	KTT	−40°C to +125°C	BB1117FA5.0	REG1117FA-5/KTTT	Tape and Reel, 50
						REG1117FA-5/500	Tape and Reel, 500
REG1117A	Adj./1A	SOT223-3	DCY	−40°C to +125°C	BB1117A	REG1117A	Rails, 80
						REG1117A	Tape and Reel, 2500
REG1117FA	Adj./1A	DDPAK-3	KTT	−40°C to +125°C	REG1117FA	REG1117FA/KTTT	Tape and Reel, 50
						REG1117FA/500	Tape and Reel, 500

(1) For the most current package and ordering information, see the Package Option Addendum located at the end of this data sheet.

ELECTRICAL CHARACTERISTICS

At T_J = +25°C, unless otherwise noted.

PARAMETER	CONDITION	REG1117, REG1117A			UNIT
		MIN	TYP	MAX	
OUTPUT VOLTAGE					
REG1117-2.85	I_O = 10mA, V_{IN} = 4.85V	2.820	2.85	2.880	V
See Note 1	I_O = 0 to 800mA, V_{IN} = 4.05V to 10V	2.790	2.85	2.910	V
REG1117-3.3	I_O = 10mA, V_{IN} = 5.3V	3.270	3.30	3.330	V
See Note 1	I_O = 0 to 800mA, V_{IN} = 4.8V to 10V	3.240	3.30	3.360	V
REG1117-5	I_O = 10mA, V_{IN} = 7V	4.950	5.00	5.050	V
See Note 1	I_O = 0 to 800mA, V_{IN} = 6.5V to 10V	4.900	5.00	5.100	V
REG1117A-1.8	I_O = 10mA, V_{IN} = 3.8V	1.782	1.8	1.818	V
See Note 1	I_O = 0 to 1A, V_{IN} = 3.8V to 10V	1.764	1.8	1.836	V
REG1117A-2.5	I_O = 10mA, V_{IN} = 4.5V	2.475	2.5	2.525	V
See Note 1	I_O = 0 to 1A, V_{IN} = 4.5V to 10V	2.450	2.5	2.550	V
REG1117A-5	I_O = 10mA, V_{IN} = 7V	4.950	5.0	5.050	V
See Note 1	I_O = 0 to 1A, V_{IN} = 7V to 10V	4.900	5.0	5.100	V
REFERENCE VOLTAGE					
REG1117 (Adjustable)	I_O = 10mA, $V_{IN} - V_O$ = 2V	1.238	1.250	1.262	V
See Note 1	I_O = 10 to 800mA, $V_{IN} - V_O$ = 1.4 to 10V	1.225	1.250	1.280	V
REG1117A (Adjustable)	I_O = 10mA, $V_{IN} - V_O$ = 2V	1.238	1.250	1.262	V
See Note 1	I_O = 10mA to 1A, $V_{IN} - V_O$ = 1.4 to 10V	1.225	1.250	1.280	V
LINE REGULATION					
REG1117-2.85(1)	I_O = 0, V_{IN} = 4.25 to 10V		1	7	mV
REG1117-3.3(1)	I_O = 0, V_{IN} = 4.8 to 10V		2	7	mV
REG1117-5(1)	I_O = 0, V_{IN} = 6.5 to 15V		3	10	mV
REG1117 (Adjustable)(1)	I_O = 10mA, $V_{IN} - V_O$ = 1.5 to 13.75V		0.1	0.4	%
REG1117A (Adjustable)(1)	I_O = 10mA, $V_{IN} - V_O$ = 1.5 to 13.75V		0.1	0.4	%
REG1117A-1.8(1)	I_O = 0, V_{IN} = 3.8V to 10V		1	7	mV
REG1117A-2.5(1)	I_O = 0, V_{IN} = 4.5V to 10V		1	7	mV
REG1117A-5.0(1)	I_O = 0, V_{IN} = 7V to 15V		3	10	mV
LOAD REGULATION					
REG1117-2.85(1)	I_O = 0 to 800mA, V_{IN} = 4.25V		2	10	mV
REG1117-3.3(1)	I_O = 0 to 800mA, V_{IN} = 4.8V		3	12	mV
REG1117-5(1)	I_O = 0 to 800mA, V_{IN} = 6.5V		3	15	mV
REG1117 (Adjustable)(1)(2)	I_O = 10 to 800mA, $V_{IN} - V_O$ = 3V		0.1	0.4	%
REG1117A (Adjustable)(1)(2)	I_O = 10mA to 1A, $V_{IN} - V_O$ = 3V		0.1	0.4	%
REG1117A-1.8(1)	I_O = 0 to 1A, V_{IN} = 3.8V		2	10	mV
REG1117A-2.5	I_O = 0 to 1A, V_{IN} = 4.5V		2	10	mV
REG1117A-5	I_O = 0 to 1A, V_{IN} = 7.0V		3	15	mV
DROPOUT VOLTAGE(3)					
All Models(1)	I_O = 100mA		1.00	1.10	V
See Note 1	I_O = 500mA		1.05	1.15	V
REG1117 Models(1)	I_O = 800mA		1.10	1.20	V
REG1117A	I_O = 1A		1.2	1.30	V
See Note 1	I_O = 1A		1.2	1.55	V

(1) Specification applies over the full specified junction temperature range, 0°C to +125°C.
(2) REG1117 and REG1117A adjustable versions require a minimum load current for ±3% regulation.
(3) Dropout voltage is the input voltage minus output voltage that produces a 1% decrease in output voltage.
(4) Percentage change in unloaded output voltage before versus after a 30ms power pulse of I_O = 800mA (REG1117 models), I_O = 1A (REG1117A), $V_{IN} - V_O$ = 1.4V (reading taken 10ms after pulse).

ELECTRICAL CHARACTERISTICS (continued)

At T_J = +25°C, unless otherwise noted.

PARAMETER	CONDITION	REG1117, REG1117A			UNIT
		MIN	TYP	MAX	
CURRENT LIMIT					
REG1117 Models	$V_{IN} - V_O$ = 5V	800	950	1200	mA
REG1117A	$V_{IN} - V_O$ = 5V	1000	1250	1600	mA
MINIMUM LOAD CURRENT					
Adjustable Models(1)(2)	$V_{IN} - V_O$ = 13.75V		1.7	5	mA
QUIESCENT CURRENT					
Fixed-Voltage Models(1)	$V_{IN} - V_O$ = 5V		4	10	mA
ADJUSTABLE PIN CURRENT(1)(2)	I_O = 10mA, $V_{IN} - V_O$ = 1.4 to 10V		50	120	µA
vs Load Current, REG1117(1)	I_O = 10mA to 800mA, $V_{IN} - V_O$ = 1.4 to 10V		0.5	5	µA
vs Load Current, REG1117A(1)	I_O = 10mA to 1A, $V_{IN} - V_O$ = 1.4 to 10V		0.5	5	µA
THERMAL REGULATION					
All Models(4)	30ms Pulse		0.01	0.1	%/W
RIPPLE REJECTION					
All Models	f = 120Hz, $V_{IN} - V_{OUT}$ = 3V + 1V_{PP} Ripple		62		dB
TEMPERATURE DRIFT					
Fixed-Voltage Models	T_J = 0°C to +125°C		0.5		%
Adjustable Models	T_J = 0°C to +125°C		2		%
LONG-TERM STABILITY					
All Models	T_A = 125°C, 1000Hr		0.3		%
OUTPUT NOISE					
rms Noise, All Models	f = 10Hz to 10kHz		0.003		%
THERMAL RESISTANCE					
Thermal Resistance, θ_{JC}	(Junction-to-Case at Tab)				
3-Lead SOT-223 Surface-Mount			15		°C/W
3-Lead DDPAK Surface-Mount	f > 50Hz		2		°C/W
	dc		3		°C/W
Thermal Resistance, θ_{JA}	(Junction-to-Case at Tab)				
3-Lead DDPAK Surface-Mount	No Heatsink		65		°C/W

(1) Specification applies over the full specified junction temperature range, 0°C to +125°C.
(2) REG1117 and REG1117A adjustable versions require a minimum load current for ±3% regulation.
(3) Dropout voltage is the input voltage minus output voltage that produces a 1% decrease in output voltage.
(4) Percentage change in unloaded output voltage before versus after a 30ms power pulse of I_O = 800mA (REG1117 models), I_O = 1A (REG1117A), $V_{IN} - V_O$ = 1.4V (reading taken 10ms after pulse).

SIMPLIFIED SCHEMATIC

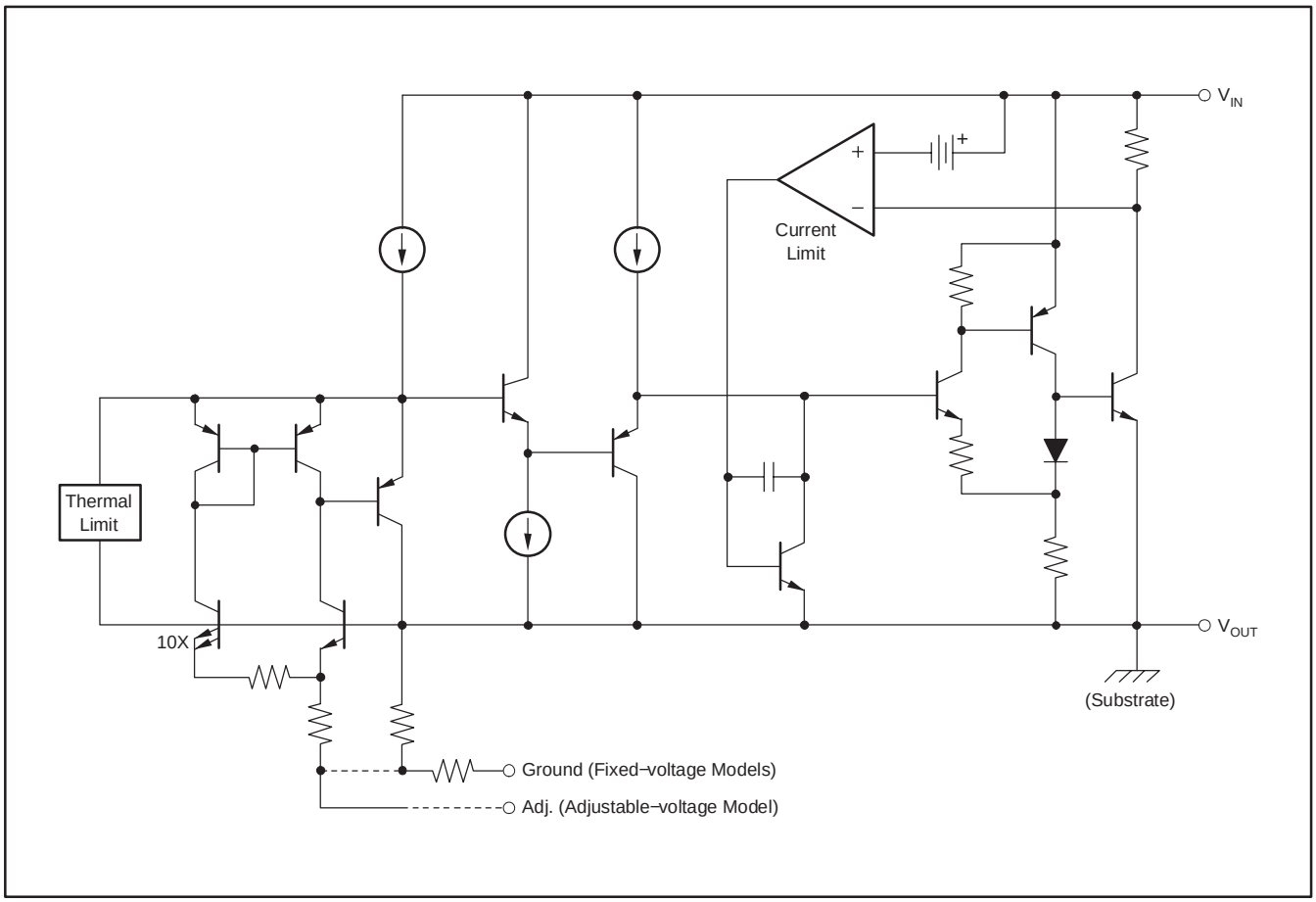

TYPICAL CHARACTERISTICS

At T_A = +25°C, all models, unless otherwise noted.

SHORT−CIRCUIT CURRENT vs TEMPERATURE

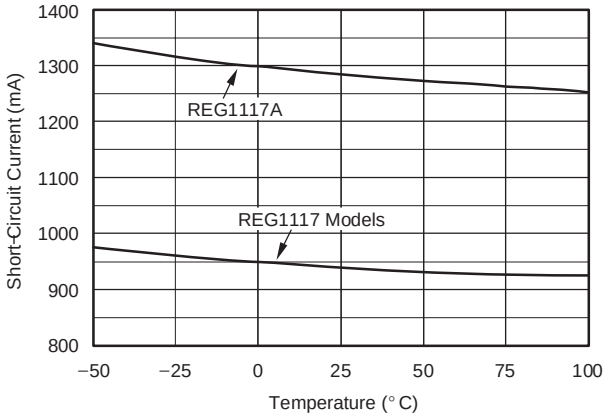

LOAD REGULATION
(ΔI_{LOAD} = 800mA)

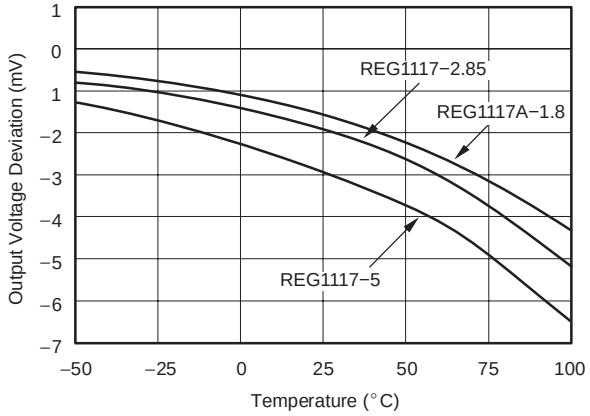

LINE REGULATION vs TEMPERATURE

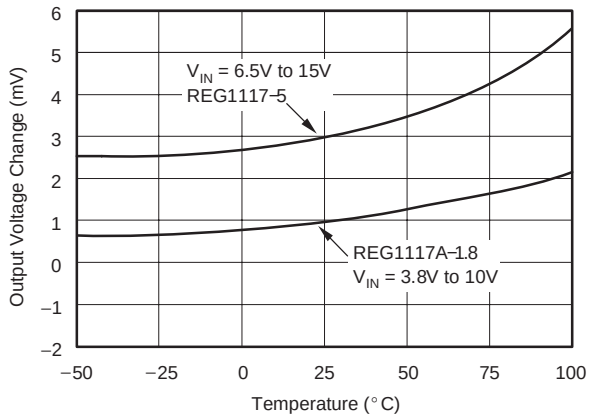

RIPPLE REJECTION vs FREQUENCY

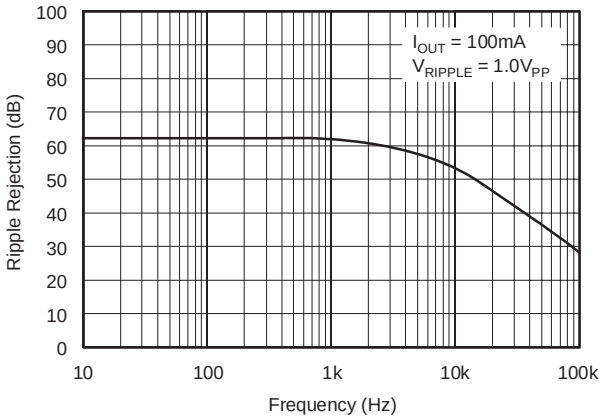

OUTPUT VOLTAGE vs TEMPERATURE

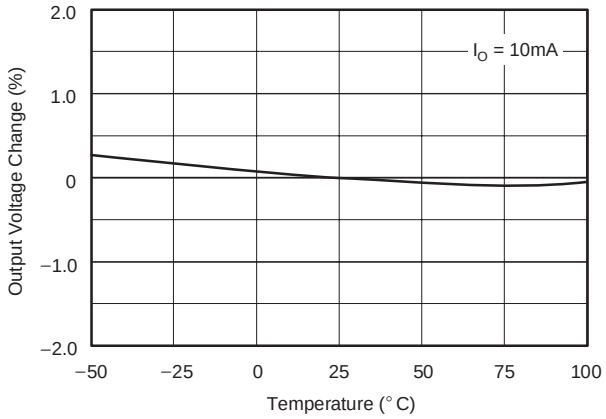

QUIESCENT CURRENT vs TEMPERATURE

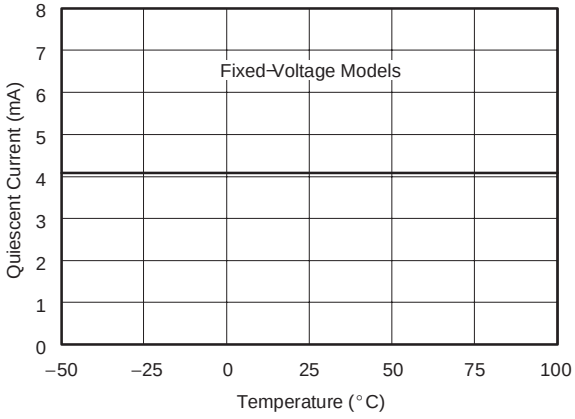

TYPICAL CHARACTERISTICS (continued)

At T_A = +25°C, all models, unless otherwise noted.

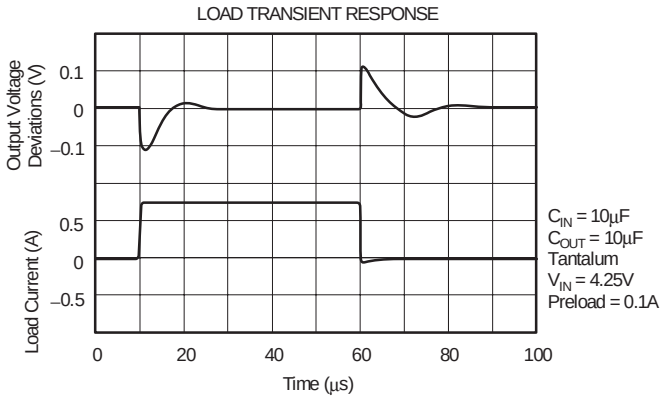

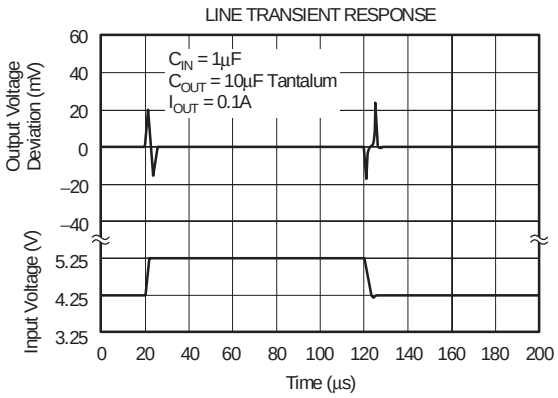

APPLICATIONS INFORMATION

Figure 1 shows the basic hookup diagram for fixed-voltage models. All models require an output capacitor for proper operation, and for improving high-frequency load regulation; a 10µF tantalum capacitor is recommended. Aluminum electrolytic types of 50µF or greater can also be used. A high-quality capacitor should be used to assure that the ESR (Effective Series Resistance) is less than 0.5Ω.

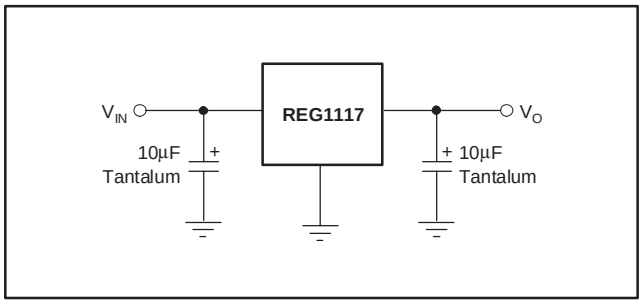

Figure 1. Fixed-Voltage Model—Basic Connections

Figure 2 shows a hookup diagram for the adjustable voltage model. Resistor values are shown for some commonly-used output voltages. Values for other voltages can be calculated from the equation shown in Figure 2. For best load regulation, connect R_1 close to the output pin and R_2 close to the ground side of the load as shown.

THERMAL CONSIDERATIONS

The REG1117 has current limit and thermal shutdown circuits that protect it from overload. The thermal shutdown activates at approximately T_J = 165°C. For continuous operation, however, the junction temperature should not be allowed to exceed 125°C. Any tendency to activate the thermal shutdown in normal use is an indication of an inadequate heat sink or excessive power dissipation. The power dissipation is equal to:

$$P_D = (V_{IN} – V_{OUT})\ I_{OUT}$$

The junction temperature can be calculated by:

$$T_J = T_A + P_D\ (\theta_{JA})$$

where T_A is the ambient temperature, and θ_{JA} is the junction-to-ambient thermal resistance.

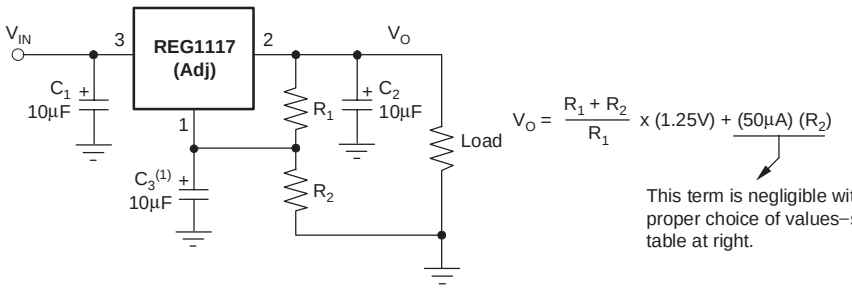

V_{OUT} (V)	R_1 (Ω)(2)	R_2 (Ω)(2)
1.25	Open	Short
1.5	750	147
2.1	158	107
2.85	169	215
3	137	191
3.3	115	187
5	113	340
10	113	787

NOTES: (1) C_3 optional. Improves high-frequency line rejection. (2) Resistors are standard 1% values.

Figure 2. Adjustable-Voltage Model—Basic Connections

A simple experiment will determine whether the maximum recommended junction temperature is exceeded in an actual circuit board and mounting configuration: Increase the ambient temperature above that expected in normal operation until the device's thermal shutdown is activated. If this occurs at more than 40°C above the maximum expected ambient temperature, then T_J will be less than 125°C during normal operation.

The internal protection circuitry of the REG1117 was designed to protect against overload conditions. It was not intended to replace proper heat sinking. Continuously running the REG1117 into thermal shutdown will degrade reliability.

LAYOUT CONSIDERATIONS

The DDPAK (REG1117F-3.3 and REG1117FA) is a surface-mount power package that has excellent thermal characteristics. For best thermal performance, the mounting tab should be soldered directly to a circuit board copper area, as shown in Figure 3. Increasing the copper area improves heat dissipation. Figure 4 shows typical thermal resistance from junction-to-ambient as a function of the copper area.

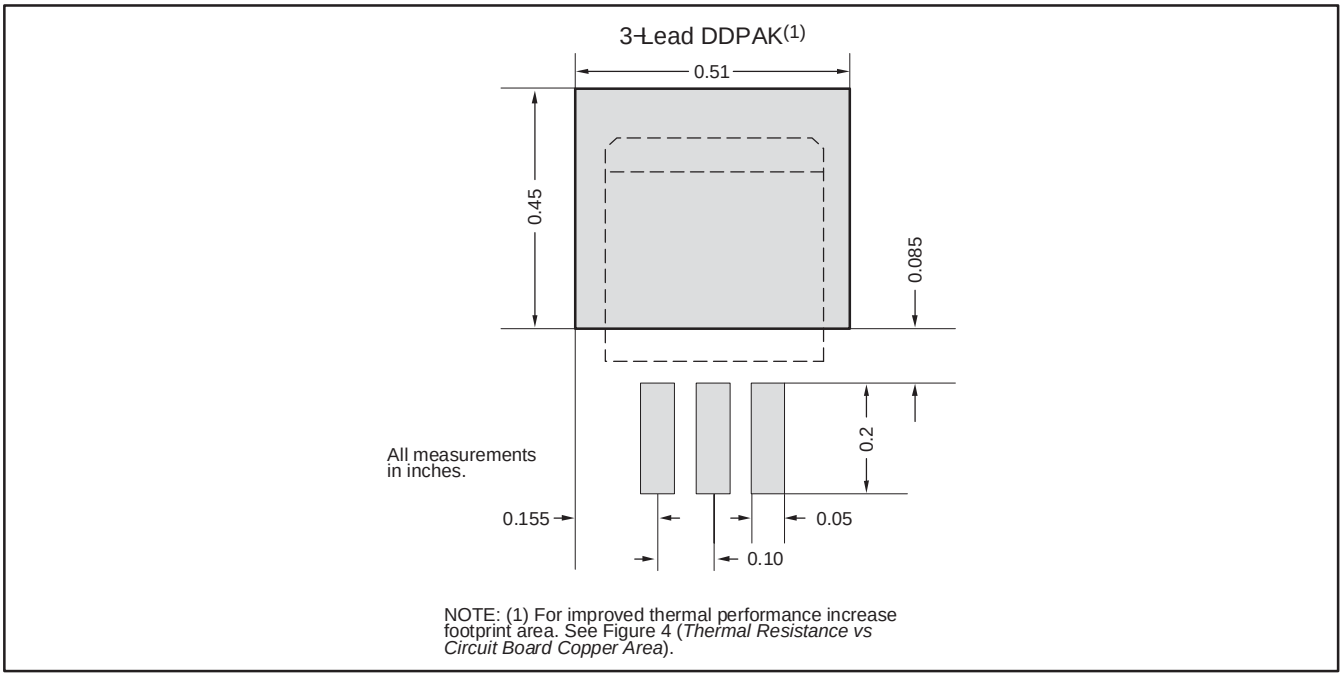

NOTE: (1) For improved thermal performance increase footprint area. See Figure 4 (*Thermal Resistance vs Circuit Board Copper Area*).

Figure 3. DDPAK Footprint

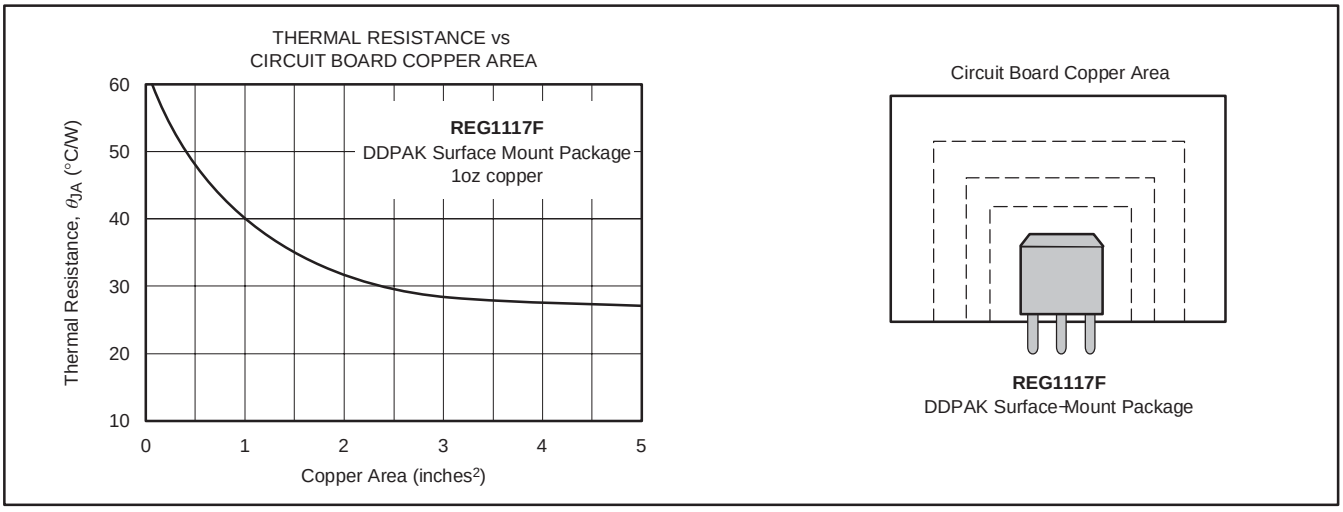

Figure 4. DDPAK Thermal Resistance versus Circuit Board Copper Area

The SOT-223 package derives heat sinking from conduction through its copper leads, especially the large mounting tab. These must be soldered to a circuit board with a substantial amount of copper remaining, as shown in Figure 5. Circuit board traces connecting the tab and the leads should be made as large as practical. The mounting tab of both packages is electrically connected to V_{OUT}.

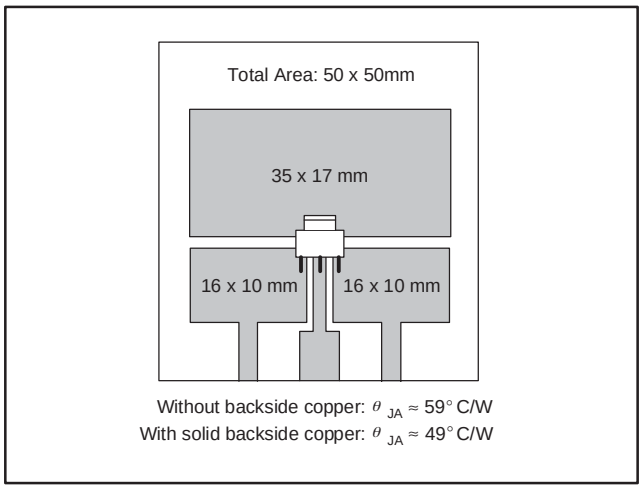

Figure 5. SOT-223 Circuit Board Layout Example

Other nearby circuit traces, including those on the back side of the circuit board, help conduct heat away from the device, even though they may not be electrically connected. Make all nearby copper traces as wide as possible and leave only narrow gaps between traces.

Table 1 shows approximate values of θ_{JA} for various circuit board and copper areas for the SOT-223 package. Nearby heat dissipating components, circuit board mounting conditions, and ventilation can dramatically affect the actual θ_{JA}. Proper heat sinking significantly increases the maximum power dissipation at a given ambient temperature, as shown in Figure 6.

Table 1. SOT-223 θ_{JA} for Various Board Configurations

TOTAL PC BOARD AREA	TOPSIDE(1) COPPER AREA	BACKSIDE COPPER AREA	SOT-223 THERMAL RESISTANCE JUNCTION-TO-AMBIENT
2500mm^2	2500mm^2	2500mm^2	46°C/W
2500mm^2	1250mm^2	2500mm^2	47°C/W
2500mm^2	950mm^2	2500mm^2	49°C/W
2500mm^2	2500mm^2	0	51°C/W
2500mm^2	1800mm^2	0	53°C/W
1600mm^2	600mm^2	1600mm^2	55°C/W
2500mm^2	1250mm^2	0	58°C/W
2500mm^2	915mm^2	0	59°C/W
1600mm^2	600mm^2	0	67°C/W
900mm^2	340mm^2	900mm^2	72°C/W
900mm^2	340mm^2	0	85°C/W

(1) Tab is attached to the topside copper.

SOLDERING METHODS

Both REG1117 packages are suitable for infrared reflow and vapor-phase reflow soldering techniques. The high rate of temperature change that occurs with wave soldering or hand soldering can damage the REG1117.

INSPEC Abstract Number: B91007604, C91012627. Kelly, E.G. “Thermal Characteristics of Surface 5WK9Ω Packages.” The Proceedings of SMTCON. Surface Mount Technology Conference and Exposition: Competitive Surface Mount Technology, April 3−6, 1990, Atlantic City, NJ, USA. Abstract Publisher: IC Manage, 1990, Chicago, IL, USA.

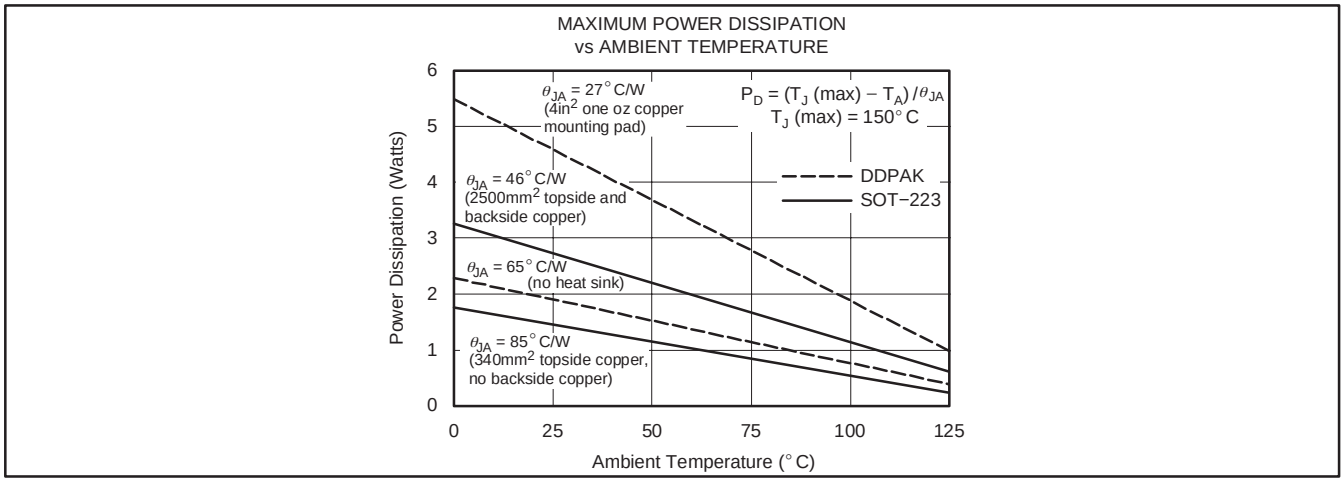

Figure 6. Maximum Power Dissipation versus Ambient Temperature

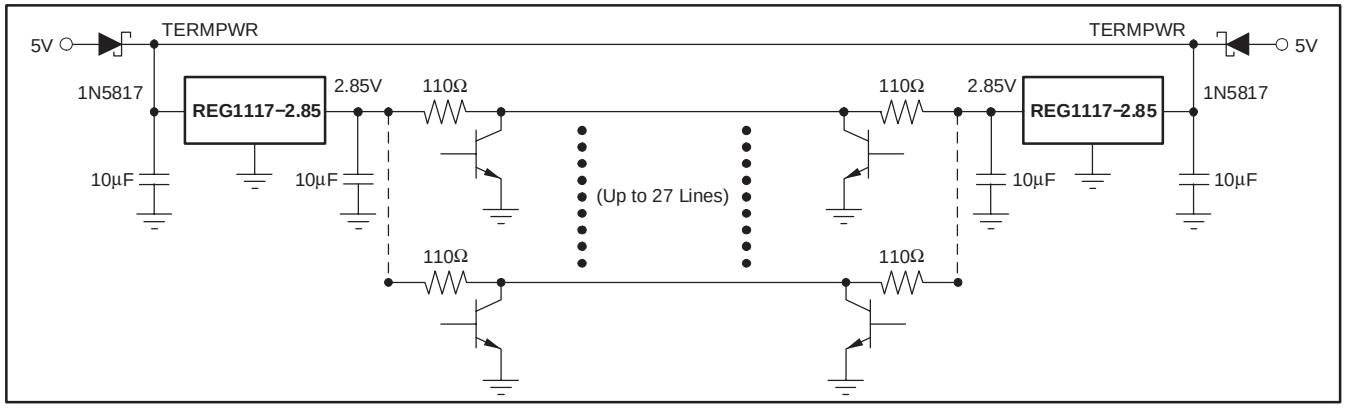

Figure 7. SCSI Active Termination Configuration

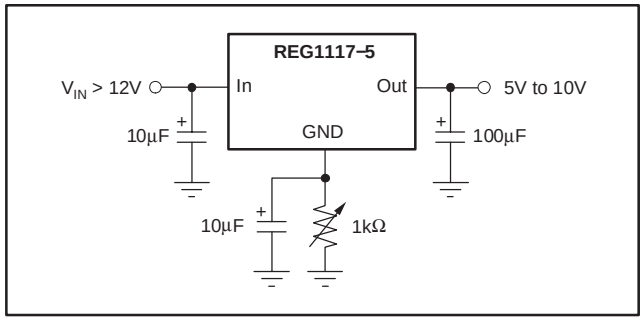

Figure 8. Adjusting Output of Fixed Voltage Models

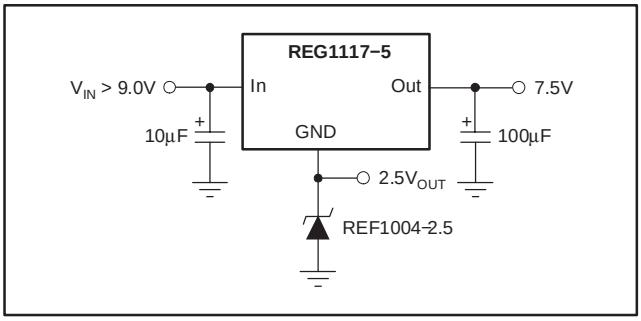

Figure 9. Regulator with Reference

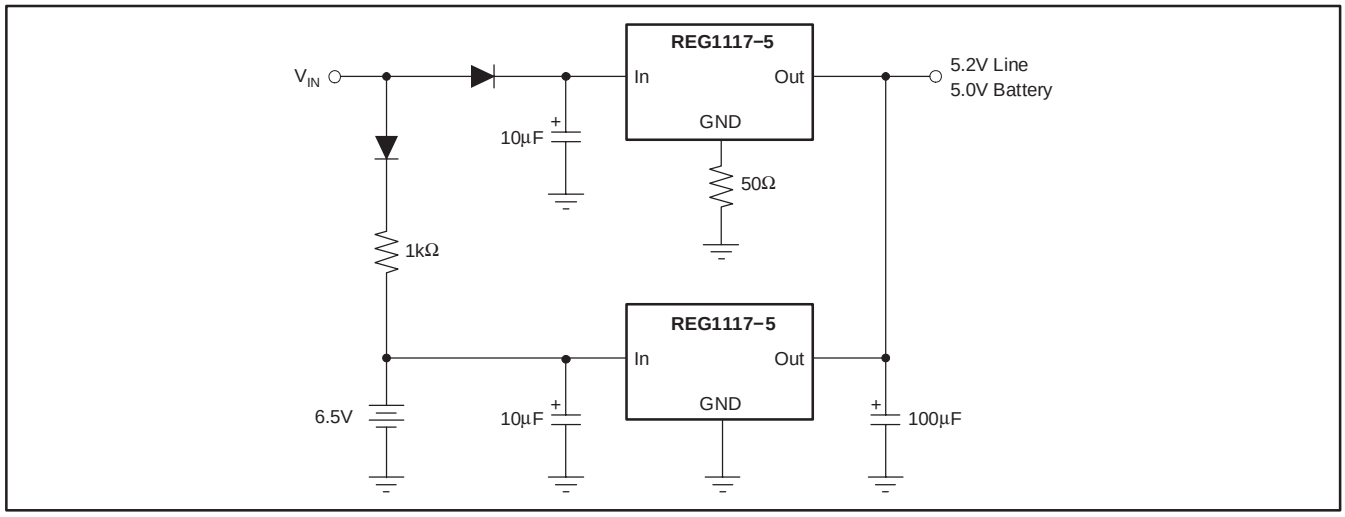

Figure 10. Battery Backed-Up Regulated Supply

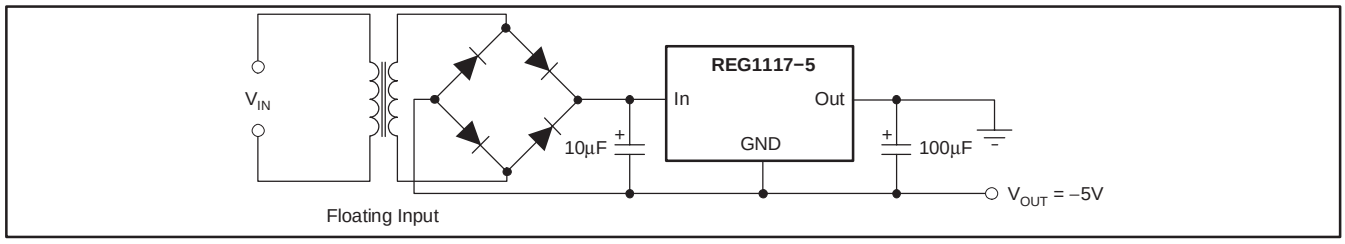

Figure 11. Low Dropout Negative Supply

PACKAGING INFORMATION

Orderable Device	Status (1)	Package Type	Package Drawing	Pins	Package Qty	Eco Plan (2)	Lead finish/ Ball material (6)	MSL Peak Temp (3)	Op Temp (°C)	Device Marking (4/5)	Samples
REG1117	ACTIVE	SOT-223	DCY	4	80	RoHS & Green	NIPDAU	Level-1-260C-UNLIM	-40 to 125	BB1117	Samples
REG1117-2.85	ACTIVE	SOT-223	DCY	4	80	RoHS & Green	NIPDAU	Level-1-260C-UNLIM	-40 to 125	BB11172	Samples
REG1117-2.85/2K5	ACTIVE	SOT-223	DCY	4	2500	RoHS & Green	NIPDAU	Level-1-260C-UNLIM	-40 to 125	BB11172	Samples
REG1117-2.85G4	ACTIVE	SOT-223	DCY	4	80	RoHS & Green	NIPDAU	Level-1-260C-UNLIM	-40 to 125	BB11172	Samples
REG1117-3.3	ACTIVE	SOT-223	DCY	4	80	RoHS & Green	NIPDAU	Level-1-260C-UNLIM	-40 to 125	BB11174	Samples
REG1117-3.3/2K5	ACTIVE	SOT-223	DCY	4	2500	RoHS & Green	NIPDAU	Level-1-260C-UNLIM	-40 to 125	BB11174	Samples
REG1117-3.3/2K5G4	ACTIVE	SOT-223	DCY	4	2500	RoHS & Green	NIPDAU	Level-1-260C-UNLIM	-40 to 125	BB11174	Samples
REG1117-3.3G4	ACTIVE	SOT-223	DCY	4	80	RoHS & Green	NIPDAU	Level-1-260C-UNLIM	-40 to 125	BB11174	Samples
REG1117-5	ACTIVE	SOT-223	DCY	4	80	RoHS & Green	NIPDAU	Level-1-260C-UNLIM	-40 to 125	BB11175	Samples
REG1117-5/2K5	ACTIVE	SOT-223	DCY	4	2500	RoHS & Green	NIPDAU	Level-1-260C-UNLIM	-40 to 125	BB11175	Samples
REG1117-5G4	ACTIVE	SOT-223	DCY	4	80	RoHS & Green	NIPDAU	Level-1-260C-UNLIM	-40 to 125	BB11175	Samples
REG1117/2K5	ACTIVE	SOT-223	DCY	4	2500	RoHS & Green	NIPDAU	Level-1-260C-UNLIM	-40 to 125	BB1117	Samples
REG1117/2K5G4	ACTIVE	SOT-223	DCY	4	2500	RoHS & Green	NIPDAU	Level-1-260C-UNLIM	-40 to 125	BB1117	Samples
REG1117A	ACTIVE	SOT-223	DCY	4	80	RoHS & Green	NIPDAU	Level-1-260C-UNLIM	-40 to 125	BB1117A	Samples
REG1117A-1.8	ACTIVE	SOT-223	DCY	4	80	RoHS & Green	NIPDAU	Level-1-260C-UNLIM	-40 to 125	R111718	Samples
REG1117A-1.8/2K5	ACTIVE	SOT-223	DCY	4	2500	RoHS & Green	NIPDAU	Level-1-260C-UNLIM	-40 to 125	R111718	Samples
REG1117A-1.8G4	ACTIVE	SOT-223	DCY	4	80	RoHS & Green	NIPDAU	Level-1-260C-UNLIM	-40 to 125	R111718	Samples
REG1117A-2.5	ACTIVE	SOT-223	DCY	4	80	RoHS & Green	NIPDAU	Level-1-260C-UNLIM	-40 to 125	R111725	Samples
REG1117A-2.5/2K5	ACTIVE	SOT-223	DCY	4	2500	RoHS & Green	NIPDAU	Level-1-260C-UNLIM	-40 to 125	R111725	Samples
REG1117A/2K5	ACTIVE	SOT-223	DCY	4	2500	RoHS & Green	NIPDAU	Level-1-260C-UNLIM	-40 to 125	BB1117A	Samples

Orderable Device	Status (1)	Package Type	Package Drawing	Pins	Package Qty	Eco Plan (2)	Lead finish/ Ball material (6)	MSL Peak Temp (3)	Op Temp (°C)	Device Marking (4/5)	Samples
REG1117F-3.3/500	ACTIVE	DDPAK/ TO-263	KTT	3	500	RoHS & Green	Call TI | SN	Level-2-260C-1 YEAR	-40 to 125	REG1117F4	Samples
REG1117FA-1.8KTTT	ACTIVE	DDPAK/ TO-263	KTT	3	50	RoHS & Green	Call TI | SN	Level-2-260C-1 YEAR	-40 to 125	REG 1117FA1.8	Samples
REG1117FA-2.5/500	ACTIVE	DDPAK/ TO-263	KTT	3	500	RoHS & Green	Call TI | SN	Level-2-260C-1 YEAR	-40 to 125	REG 1117FA2.5	Samples
REG1117FA-5.0/500	ACTIVE	DDPAK/ TO-263	KTT	3	500	RoHS & Green	Call TI | SN	Level-2-260C-1 YEAR	-40 to 125	REG 1117FA5.0	Samples
REG1117FA/500	ACTIVE	DDPAK/ TO-263	KTT	3	500	RoHS & Green	Call TI | SN	Level-2-260C-1 YEAR	-40 to 125	REG1117FA	Samples
REG1117FA1.8KTTTG3	ACTIVE	DDPAK/ TO-263	KTT	3	50	RoHS & Green	SN	Level-2-260C-1 YEAR	-40 to 125	REG 1117FA1.8	Samples

(1) The marketing status values are defined as follows:
ACTIVE: Product device recommended for new designs.
LIFEBUY: TI has announced that the device will be discontinued, and a lifetime-buy period is in effect.
NRND: Not recommended for new designs. Device is in production to support existing customers, but TI does not recommend using this part in a new design.
PREVIEW: Device has been announced but is not in production. Samples may or may not be available.
OBSOLETE: TI has discontinued the production of the device.

(2) **RoHS:** TI defines "RoHS" to mean semiconductor products that are compliant with the current EU RoHS requirements for all 10 RoHS substances, including the requirement that RoHS substance do not exceed 0.1% by weight in homogeneous materials. Where designed to be soldered at high temperatures, "RoHS" products are suitable for use in specified lead-free processes. TI may reference these types of products as "Pb-Free".
RoHS Exempt: TI defines "RoHS Exempt" to mean products that contain lead but are compliant with EU RoHS pursuant to a specific EU RoHS exemption.
Green: TI defines "Green" to mean the content of Chlorine (Cl) and Bromine (Br) based flame retardants meet JS709B low halogen requirements of <=1000ppm threshold. Antimony trioxide based flame retardants must also meet the <=1000ppm threshold requirement.

(3) MSL, Peak Temp. - The Moisture Sensitivity Level rating according to the JEDEC industry standard classifications, and peak solder temperature.

(4) There may be additional marking, which relates to the logo, the lot trace code information, or the environmental category on the device.

(5) Multiple Device Markings will be inside parentheses. Only one Device Marking contained in parentheses and separated by a "~" will appear on a device. If a line is indented then it is a continuation of the previous line and the two combined represent the entire Device Marking for that device.

(6) Lead finish/Ball material - Orderable Devices may have multiple material finish options. Finish options are separated by a vertical ruled line. Lead finish/Ball material values may wrap to two lines if the finish value exceeds the maximum column width.

Important Information and Disclaimer: The information provided on this page represents TI's knowledge and belief as of the date that it is provided. TI bases its knowledge and belief on information provided by third parties, and makes no representation or warranty as to the accuracy of such information. Efforts are underway to better integrate information from third parties. TI has taken and continues to take reasonable steps to provide representative and accurate information but may not have conducted destructive testing or chemical analysis on incoming materials and chemicals. TI and TI suppliers consider certain information to be proprietary, and thus CAS numbers and other limited information may not be available for release.

In no event shall TI's liability arising out of such information exceed the total purchase price of the TI part(s) at issue in this document sold by TI to Customer on an annual basis.

TAPE AND REEL INFORMATION

REEL DIMENSIONS

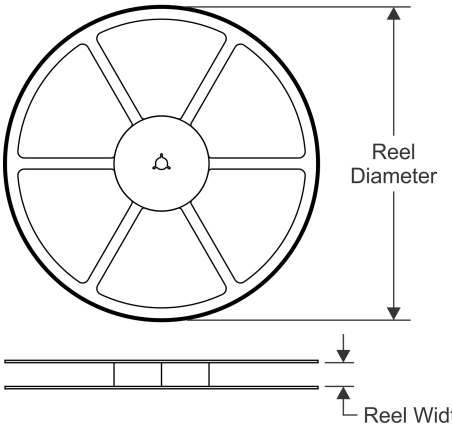

TAPE DIMENSIONS

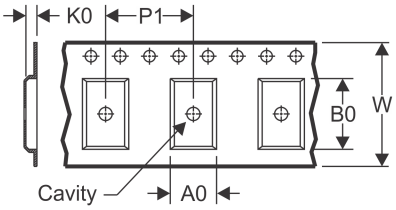

A0	Dimension designed to accommodate the component width
B0	Dimension designed to accommodate the component length
K0	Dimension designed to accommodate the component thickness
W	Overall width of the carrier tape
P1	Pitch between successive cavity centers

QUADRANT ASSIGNMENTS FOR PIN 1 ORIENTATION IN TAPE

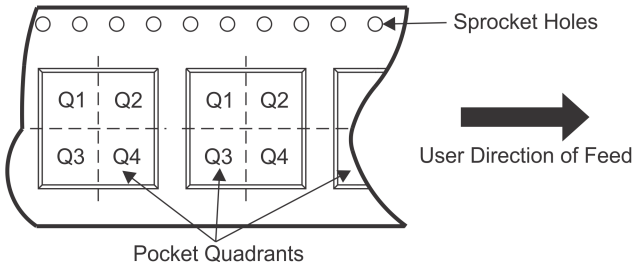

*All dimensions are nominal

Device	Package Type	Package Drawing	Pins	SPQ	Reel Diameter (mm)	Reel Width W1 (mm)	A0 (mm)	B0 (mm)	K0 (mm)	P1 (mm)	W (mm)	Pin1 Quadrant
REG1117-2.85/2K5	SOT-223	DCY	4	2500	330.0	12.4	7.1	7.45	1.88	8.0	12.0	Q3
REG1117-3.3/2K5	SOT-223	DCY	4	2500	330.0	12.4	7.1	7.45	1.88	8.0	12.0	Q3
REG1117-5/2K5	SOT-223	DCY	4	2500	330.0	12.4	7.1	7.45	1.88	8.0	12.0	Q3
REG1117/2K5	SOT-223	DCY	4	2500	330.0	12.4	7.1	7.45	1.88	8.0	12.0	Q3
REG1117A-1.8/2K5	SOT-223	DCY	4	2500	330.0	12.4	7.1	7.45	1.88	8.0	12.0	Q3
REG1117A-2.5/2K5	SOT-223	DCY	4	2500	330.0	12.4	7.1	7.45	1.88	8.0	12.0	Q3
REG1117A/2K5	SOT-223	DCY	4	2500	330.0	12.4	7.1	7.45	1.88	8.0	12.0	Q3

TAPE AND REEL BOX DIMENSIONS

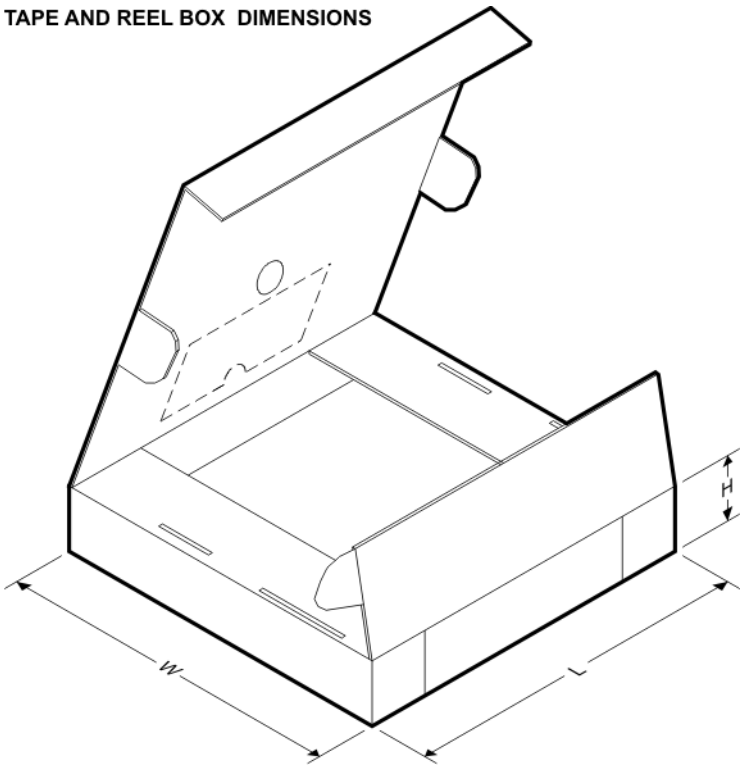

*All dimensions are nominal

Device	Package Type	Package Drawing	Pins	SPQ	Length (mm)	Width (mm)	Height (mm)
REG1117-2.85/2K5	SOT-223	DCY	4	2500	358.0	335.0	35.0
REG1117-3.3/2K5	SOT-223	DCY	4	2500	358.0	335.0	35.0
REG1117-5/2K5	SOT-223	DCY	4	2500	358.0	335.0	35.0
REG1117/2K5	SOT-223	DCY	4	2500	358.0	335.0	35.0
REG1117A-1.8/2K5	SOT-223	DCY	4	2500	358.0	335.0	35.0
REG1117A-2.5/2K5	SOT-223	DCY	4	2500	358.0	335.0	35.0
REG1117A/2K5	SOT-223	DCY	4	2500	358.0	335.0	35.0

TUBE

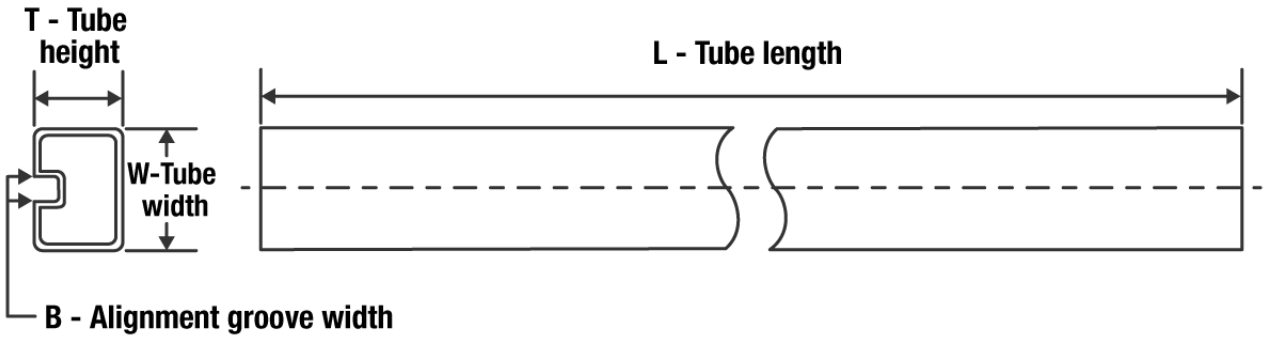

*All dimensions are nominal

Device	Package Name	Package Type	Pins	SPQ	L (mm)	W (mm)	T (µm)	B (mm)
REG1117	DCY	SOT-223	4	80	542.9	8.6	3606	2.67
REG1117-2.85	DCY	SOT-223	4	80	542.9	8.6	3606	2.67
REG1117-2.85G4	DCY	SOT-223	4	80	542.9	8.6	3606	2.67
REG1117-3.3	DCY	SOT-223	4	80	542.9	8.6	3606	2.67
REG1117-3.3G4	DCY	SOT-223	4	80	542.9	8.6	3606	2.67
REG1117-5	DCY	SOT-223	4	80	542.9	8.6	3606	2.67
REG1117-5G4	DCY	SOT-223	4	80	542.9	8.6	3606	2.67
REG1117A	DCY	SOT-223	4	80	542.9	8.6	3606	2.67
REG1117A-1.8	DCY	SOT-223	4	80	542.9	8.6	3606	2.67
REG1117A-1.8G4	DCY	SOT-223	4	80	542.9	8.6	3606	2.67
REG1117A-2.5	DCY	SOT-223	4	80	542.9	8.6	3606	2.67

KTT (R–PSFM–G3) PLASTIC FLANGE–MOUNT PACKAGE

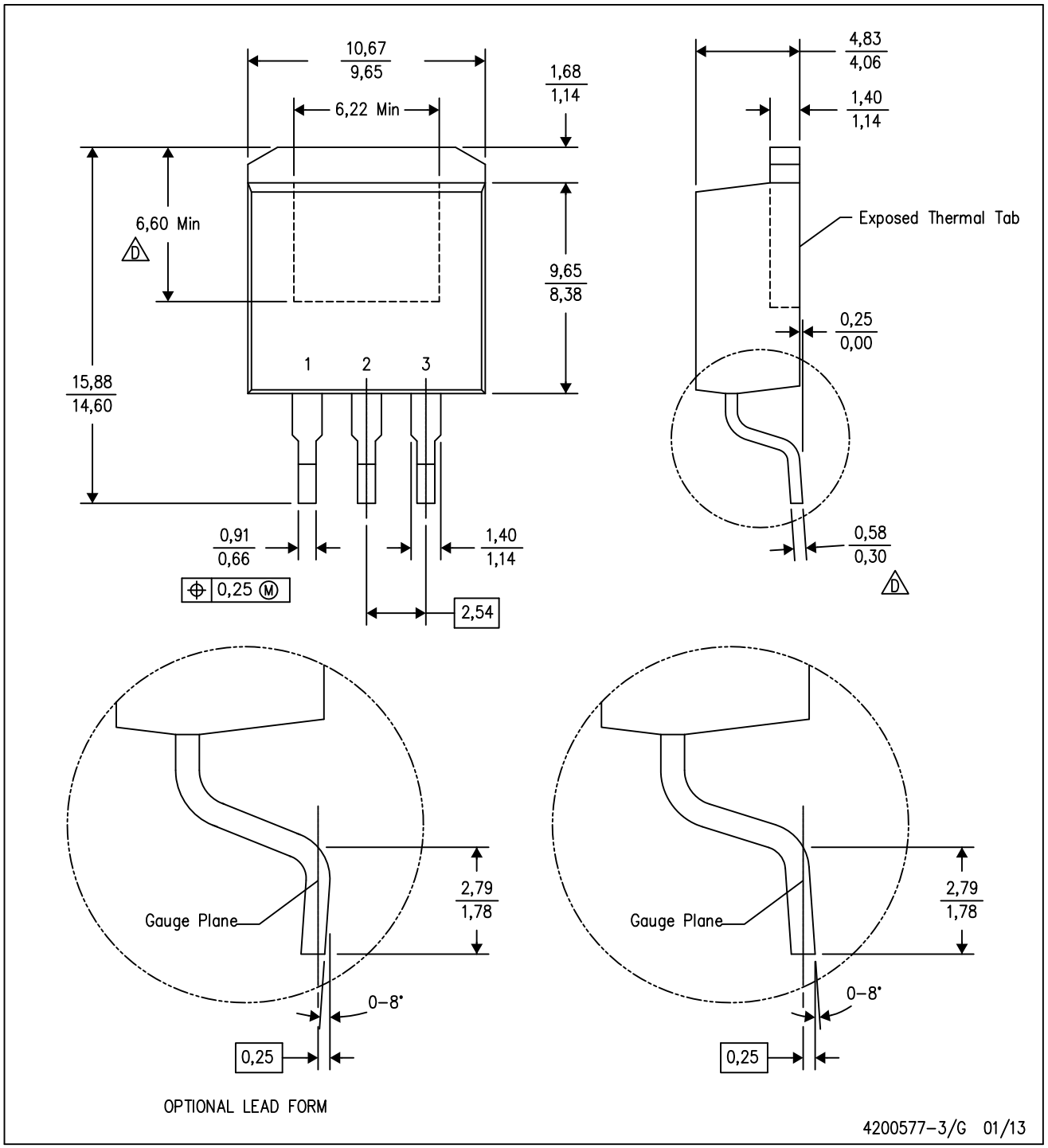

NOTES:
A. All linear dimensions are in millimeters.
B. This drawing is subject to change without notice.
C. Body dimensions do not include mold flash or protrusion. Mold flash or protrusion not to exceed 0.005 (0,13) per side.
D. Falls within JEDEC TO–263 variation AA, except minimum lead thickness and minimum exposed pad length.

KTT (R–PSFM–G3) PLASTIC FLANGE–MOUNT PACKAGE

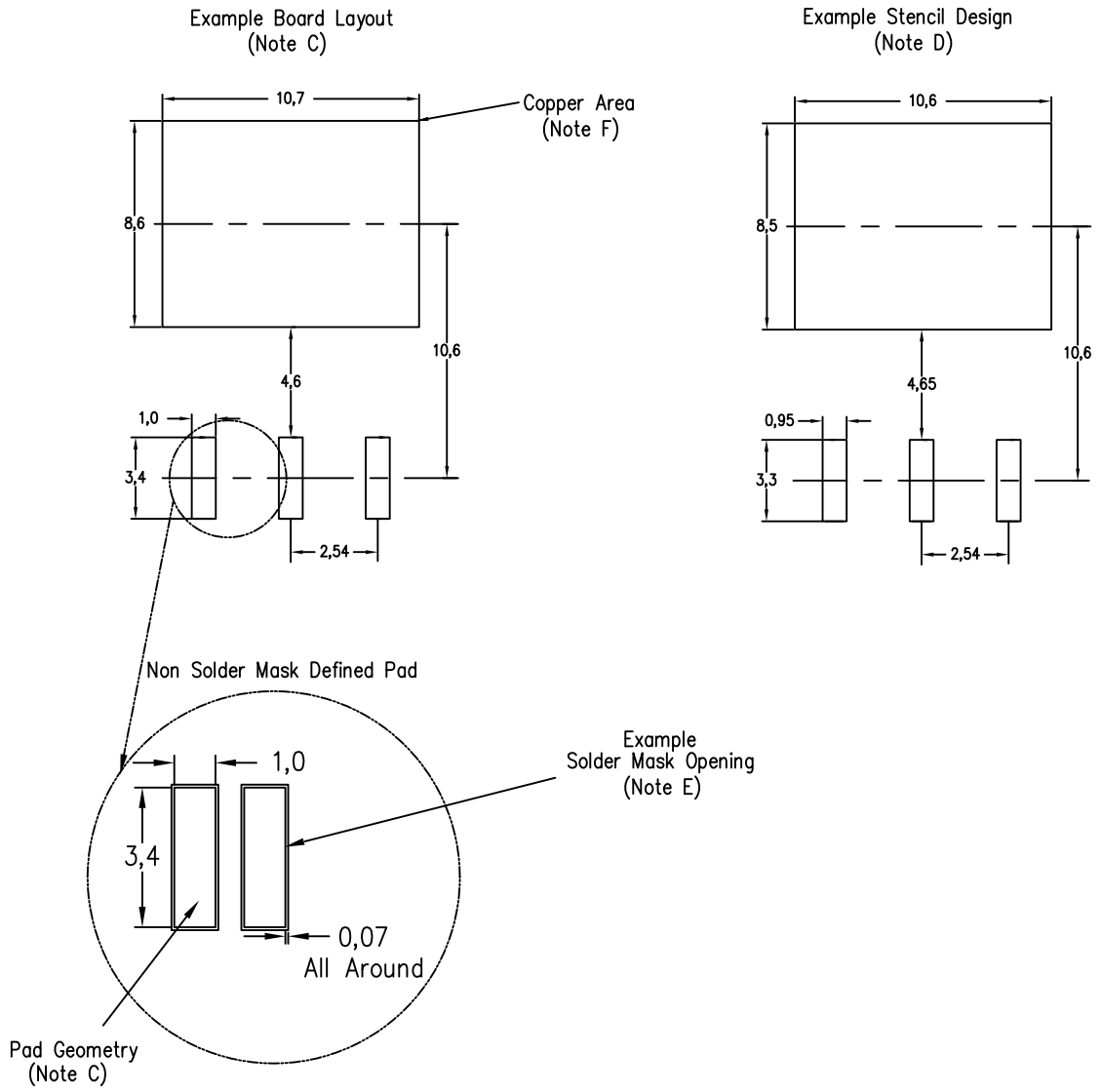

NOTES:
A. All linear dimensions are in millimeters.
B. This drawing is subject to change without notice.
C. Publication IPC–SM–782 is recommended for alternate designs.
D. Laser cutting apertures with trapezoidal walls and also rounding corners will offer better paste release. Customers should contact their board assembly site for stencil design recommendations. Refer to IPC–7525.
E. Customers should contact their board fabrication site for solder mask tolerances between and around signal pads.
F. This package is designed to be soldered to a thermal pad on the board. Refer to the Product Datasheet for specific thermal information, via requirements, and recommended thermal pad size. For thermal pad sizes larger than shown a solder mask defined pad is recommended in order to maintain the solderable pad geometry while increasing copper area.

MPDS094A – APRIL 2001 – REVISED JUNE 2002

DCY (R-PDSO-G4) **PLASTIC SMALL-OUTLINE**

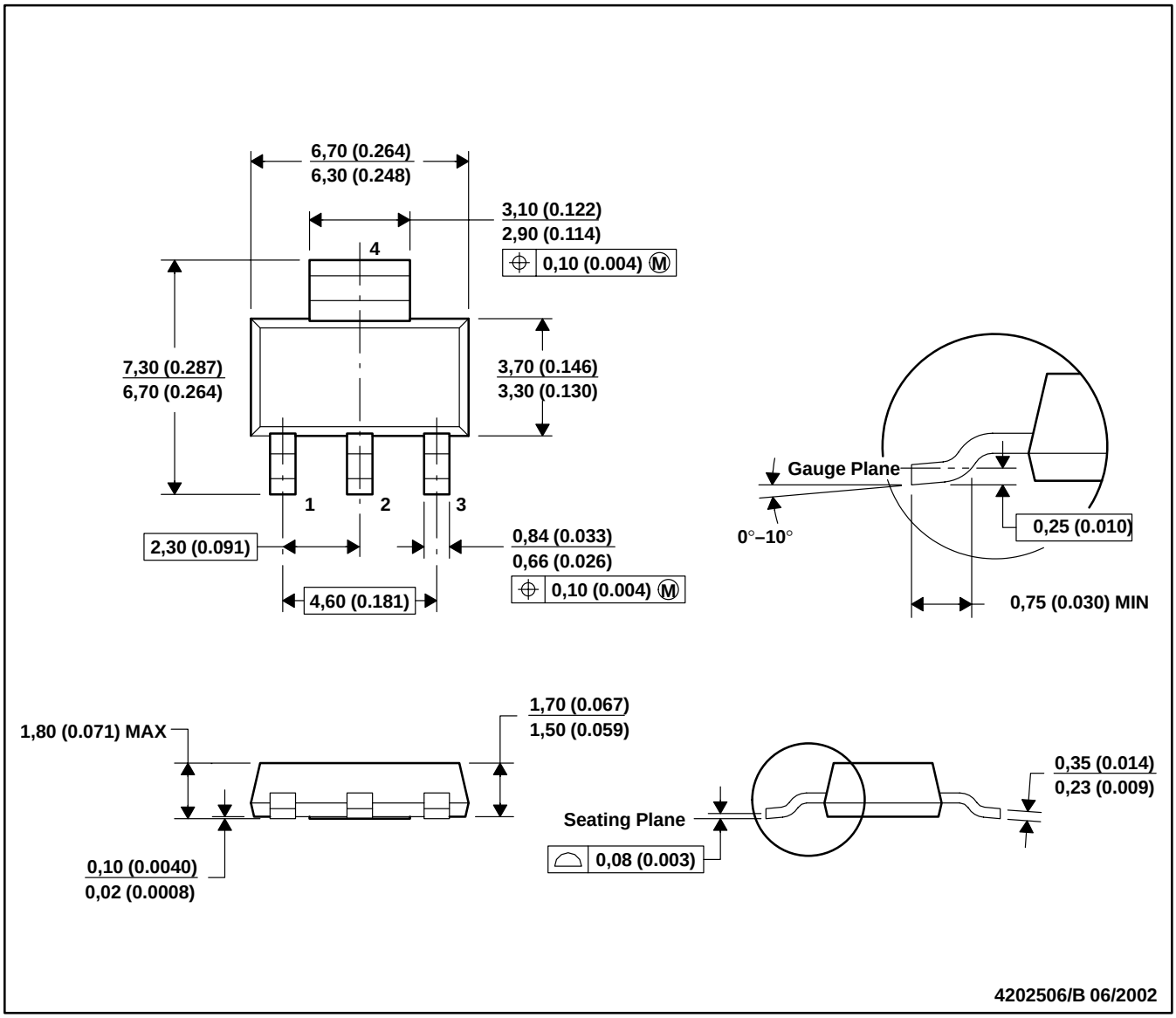

NOTES: A. All linear dimensions are in millimeters (inches).
B. This drawing is subject to change without notice.
C. Body dimensions do not include mold flash or protrusion.
D. Falls within JEDEC TO-261 Variation AA.

DCY (R–PDSO–G4) PLASTIC SMALL OUTLINE

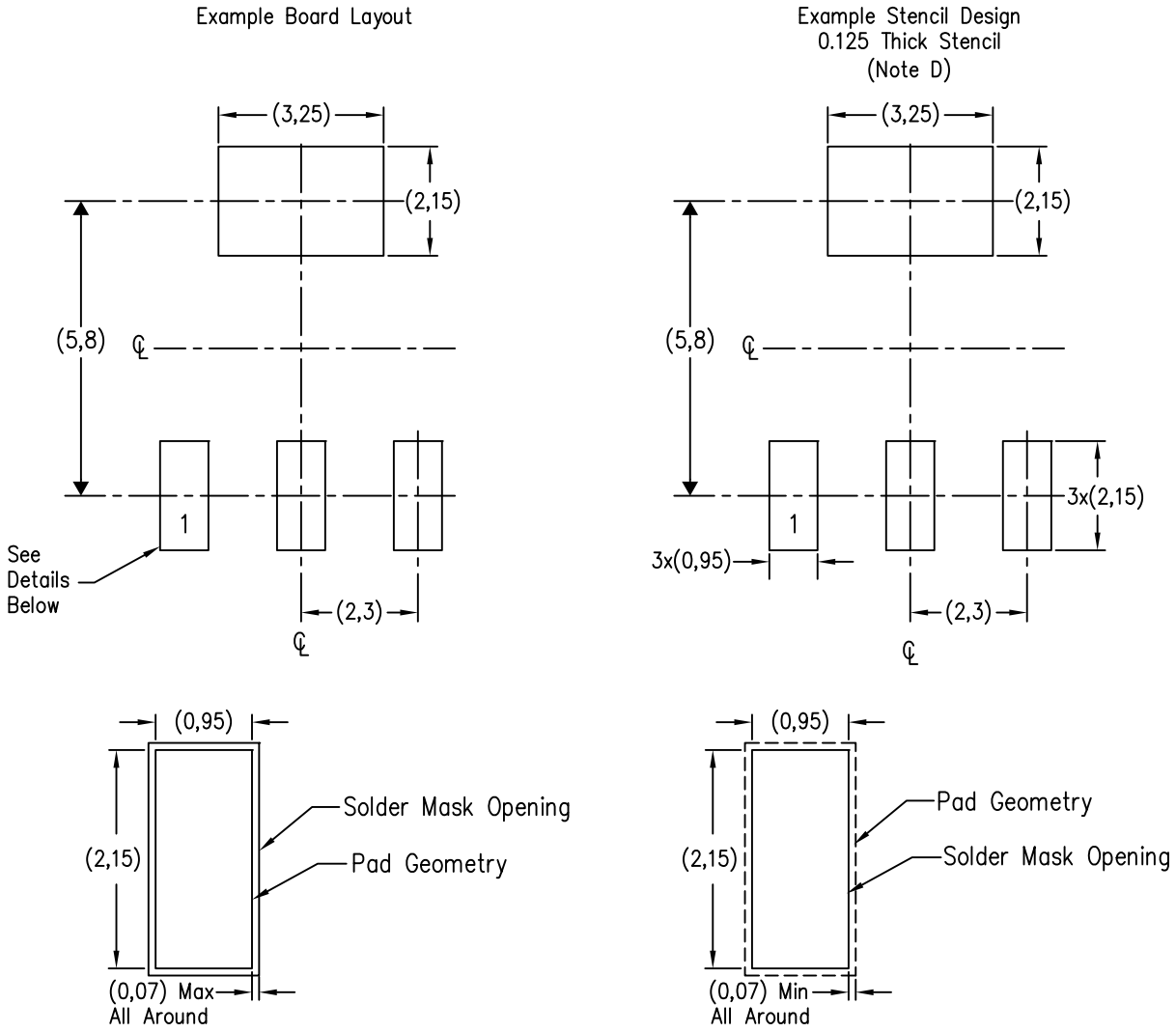

NOTES:

A. All linear dimensions are in millimeters.
B. This drawing is subject to change without notice.
C. Publication IPC–7351 is recommended for alternate designs.
D. Laser cutting apertures with trapezoidal walls and also rounding corners will offer better paste release. Customers should contact their board assembly site for stencil recommendations. Refer to IPC 7525 for stencil design considerations.

IMPORTANT NOTICE AND DISCLAIMER

TI PROVIDES TECHNICAL AND RELIABILITY DATA (INCLUDING DATA SHEETS), DESIGN RESOURCES (INCLUDING REFERENCE DESIGNS), APPLICATION OR OTHER DESIGN ADVICE, WEB TOOLS, SAFETY INFORMATION, AND OTHER RESOURCES “AS IS” AND WITH ALL FAULTS, AND DISCLAIMS ALL WARRANTIES, EXPRESS AND IMPLIED, INCLUDING WITHOUT LIMITATION ANY IMPLIED WARRANTIES OF MERCHANTABILITY, FITNESS FOR A PARTICULAR PURPOSE OR NON-INFRINGEMENT OF THIRD PARTY INTELLECTUAL PROPERTY RIGHTS.

These resources are intended for skilled developers designing with TI products. You are solely responsible for (1) selecting the appropriate TI products for your application, (2) designing, validating and testing your application, and (3) ensuring your application meets applicable standards, and any other safety, security, regulatory or other requirements.

These resources are subject to change without notice. TI grants you permission to use these resources only for development of an application that uses the TI products described in the resource. Other reproduction and display of these resources is prohibited. No license is granted to any other TI intellectual property right or to any third party intellectual property right. TI disclaims responsibility for, and you will fully indemnify TI and its representatives against, any claims, damages, costs, losses, and liabilities arising out of your use of these resources.

TI’s products are provided subject to TI’s Terms of Sale or other applicable terms available either on ti.com or provided in conjunction with such TI products. TI’s provision of these resources does not expand or otherwise alter TI’s applicable warranties or warranty disclaimers for TI products.

TI objects to and rejects any additional or different terms you may have proposed.

Mailing Address: Texas Instruments, Post Office Box 655303, Dallas, Texas 75265
Copyright © 2022, Texas Instruments Incorporated