WIDE-INPUT SYNCHRONOUS BUCK CONTROLLER

Check for Samples: TPS40060, TPS40061

FEATURES

- **Operating Input Voltage 10 V to 55 V**
- **Input Voltage Feed-Forward Compensation**
- **< 1% Internal 0.7-V Reference**
- **Programmable Fixed-Frequency, Up to 1-MHz Voltage Mode Controller**
- **Internal Gate Drive Outputs for High-Side P-Channel and Synchronous N-Channel MOSFETs**
- **16-Pin PowerPAD™ Package (θ_{JC} = 2°C/W)**
- **Thermal Shutdown**
- **Externally Synchronizable**
- **Programmable High-Side Sense Short Circuit Protection**
- **Programmable Closed-Loop Soft-Start**
- **TPS40060 Source Only/TPS40061 Source/Sink**

APPLICATIONS

- **Networking Equipment**
- **Telecom Equipment**
- **Base Stations**
- **Servers**

DESCRIPTION

The TPS40060 and TPS40061 are high-voltage, wide input (10 V to 55 V) synchronous, step-down converters.

This family of devices offers design flexibility with a variety of user programmable functions, including; soft-start, UVLO, operating frequency, voltage feed-forward, high-side current limit, and loop compensation. These devices are also synchronizable to an external supply.

The TPS40060 and TPS40061 incorporate MOSFET gate drivers for external P-channel high-side and N-channel synchronous rectifier (SR) MOSFETs. Gate drive logic incorporates anti-cross conduction circuitry to prevent simultaneous high-side and synchronous rectifier conduction.

SIMPLIFIED APPLICATION DIAGRAM

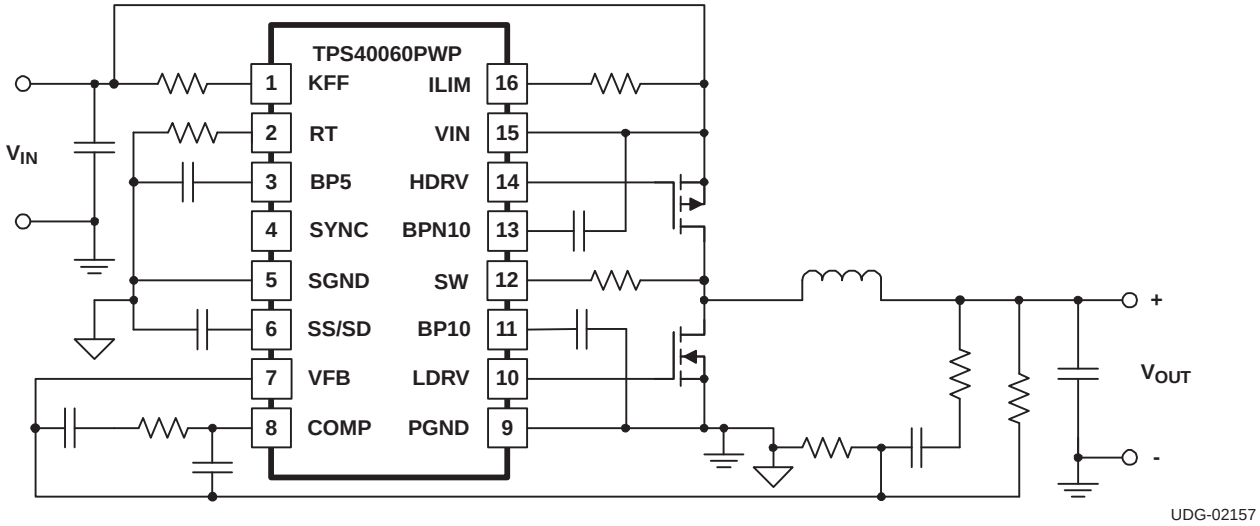

Please be aware that an important notice concerning availability, standard warranty, and use in critical applications of Texas Instruments semiconductor products and disclaimers thereto appears at the end of this data sheet.

PowerPAD is a trademark of Texas Instruments.

PRODUCTION DATA information is current as of publication date. Products conform to specifications per the terms of the Texas Instruments standard warranty. Production processing does not necessarily include testing of all parameters.

Copyright © 2002–2013, Texas Instruments Incorporated

This integrated circuit can be damaged by ESD. Texas Instruments recommends that all integrated circuits be handled with appropriate precautions. Failure to observe proper handling and installation procedures can cause damage.

ESD damage can range from subtle performance degradation to complete device failure. Precision integrated circuits may be more susceptible to damage because very small parametric changes could cause the device not to meet its published specifications.

ORDERING INFORMATION

T_A	LOAD CURRENT	PACKAGE(1)	PART NUMBER
–40°C to 85°C	SOURCE(2)	Plastic HTSSOP (PWP)	TPS40060PWP
	SOURCE/SIN(2)	Plastic HTSSOP (PWP)	TPS40061PWP

(1) The PWP package is also available taped and reeled. Add an R suffix to the device type (i.e., TPS40060PWPR). See the Application Information of the data sheet for PowerPAD drawing and layout information.
(2) See Application Information section.

ABSOLUTE MAXIMUM RATINGS

over operating free-air temperature range unless otherwise noted(1)

			TPS40060 TPS40061
V_{IN}	Input voltage range	VIN	60 V
		VFB, SS/SD, SYNC	–0.3 V to 6 V
		SW	–0.3 V to 60 V or VIN+5 V (whichever is less)
		SW. transient < 50 ns	–2.5 V
V_{OUT}	Output voltage range	COMP, RT, KFF, SS	–0.3 V to 6 V
I_{IN}	Input current	KFF	5 mA
I_{OUT}	Output current	RT	200 µA
T_J	Operating junction temperature range		–40°C to 125°C
T_{stg}	Storage temperature		–55°C to 150°C
	Lead temperature 1,6 mm (1/16 inch) from case for 10 seconds		260°C

(1) Stresses beyond those listed under *absolute maximum ratings* may cause permanent damage to the device. These are stress ratings only, and functional operation of the device at these or any other conditions beyond those indicated under *recommended operating conditions* is not implied. Exposure to absolute-maximum-rated conditions for extended periods may affect device reliability.

RECOMMENDED OPERATING CONDITIONS

		MIN	NOM	MAX	UNIT
V_{IN}	Input voltage	10		55	V
T_A	Operating free-air temperature	–40		85	°C

PWP PACKAGE (1)(2)
(TOP VIEW)

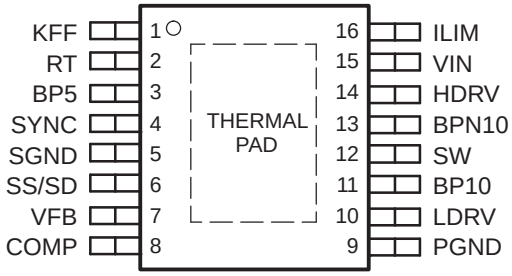

(1) For more information on the PWP package, refer to TI Technical Brief (SLMA002).
(2) PowerPAD™ heat slug must be connected to SGND (Pin 5), or electrically isolated from all other pins.

Copyright © 2002–2013, Texas Instruments Incorporated

ELECTRICAL CHARACTERISTICS

T_A = –40°C to 85°C, V_{IN} = 24 V_{dc}, R_T = 165 kΩ, I_{KFF} = 113 µA, f_{SW} = 300 kHz, all parameters at zero power dissipation (unless otherwise noted)

PARAMETER		TEST CONDITIONS	MIN	TYP	MAX	UNIT
INPUT SUPPLY						
V_{IN}	Input voltage range, VIN		10		55	V
OPERATING CURRENT						
I_{DD}	Quiescent current	Output drivers not switching		1.5	2.5	mA
5-V REFERENCE						
V_{BP5}	Input voltage		4.5	5.0	5.5	V
OSCILLATOR/RAMP GENERATOR(1)						
f_{OSC}	Frequency		270	300	330	kHz
V_{RAMP}	PWM ramp voltage(2)			2		V
V_{IH}	High-level input voltage, SYNC		2			
V_{IL}	Low-level input voltage, SYNC				0.8	
I_{SYNC}	Input current, SYNC			5	10	µA
	Pulse width, SYNC	Pulse amplitude = 5 V	50			ns
V_{RT}	RT voltage		2.32	2.50	2.68	V
	Maximum duty cycle	V_{FB} = 0 V, 100 kHz ≤ f_{SW}≤ 1 MHz	85%		98%	
	Minimum duty cycle	V_{FB} ≥ 0.75 V			0%	
V_{KFF}	Feed-forward voltage		3.35	3.50	3.65	V
I_{KFF}	Feed-forward current operating range(2)		20		1100	µA
SS/SD (SOFT START)						
I_{SS}	Soft-start source current		1.5	2.3	2.9	µA
V_{SS}	Soft-start clamp voltage		3.1	3.7	4.0	V
t_{DSCH}	Discharge time	C_{SS} = 220 pF	1.6	2.2	2.9	µs
t_{SS}	Soft-start time	C_{SS} = 220 pF, 0 V ≤ V_{SS} ≤ 1.6 V	120	155	235	
SS/SD (SHUTDOWN)						
V_{SD}	Shutdown threshold voltage		90	130	160	mV
V_{EN}	Device action threshold voltage		170	210	260	
	Hysteresis			80		
10-V REFERENCE						
V_{BP10}	Input voltage		9.0	9.7	10.7	V
ERROR AMPLIFIER						
V_{FB}	Feedback regulation voltage	T_A = 25°C	0.698	0.700	0.704	V
		0°C ≤ T_A ≤ 85°C	0.690	0.700	0.707	
			0.690	0.700	0.715	
G_{BW}	Gain bandwidth		3	5		MHz
A_{VOL}	Open loop gain		60	80		dB
I_{OH}	High-level output source current	V_{COMP} = 2.0 V, V_{FB} = 0 V	1.5	4.0		mA
I_{OL}	Low-level output sink current	V_{COMP} = 2.0 V, V_{FB} = 1 V	2.5	4.0		
I_{BIAS}	Input bias current	V_{FB} = 0.7 V		100	300	nA
V_{OH}	High-level output voltage	I_{OH} = 0.5 mA, V_{FB} = 0 V	3.25	3.45	3.60	V
V_{OL}	Low-level output voltage	I_{OL} = 0.5 mA, V_{FB} = 1 V	0.050	0.215	0.350	

(1) KFF current (I_{KFF}) increases with SYNC frequency (f_{SYNC}) and decreases with maximum duty cycle (D_{MAX}).
(2) Ensured by design. Not production tested.

Copyright © 2002–2013, Texas Instruments Incorporated

ELECTRICAL CHARACTERISTICS (continued)

T_A = –40°C to 85°C, V_{IN} = 24 V_{dc}, R_T = 165 kΩ, I_{KFF} = 113 µA, f_{SW} = 300 kHz, all parameters at zero power dissipation (unless otherwise noted)

PARAMETER		TEST CONDITIONS	MIN	TYP	MAX	UNIT
CURRENT LIMIT						
I_{SINK}	Current limit sink current	T_A = 25°C	8.8	10.0	11.4	µA
		0°C ≤ T_A ≤ 85°C	8.3		11.9	
		-40°C ≤ T_A ≤ 0°C	7.5		11.5	
t_{DELAY}	Propagation delay to output	V_{ILIM} = 23.7 V, V_{SW} = (V_{ILIM} – 0.5 V)		330	500	ns
		V_{ILIM} = 23.7 V, V_{SW} = (V_{ILIM} – 2 V)		275	375	
t_{ON}	Switch leading-edge blanking pulse time(3)		100			
t_{OFF}	Off time during a fault			7		cycles
V_{OS}	Overcurrent comparator offset voltage		-200	-60	50	mV
OUTPUT DRIVER						
t_{HFALL}	High-side driver fall time(3)	C_{HDRV} = 2200 pF, (V_{IN} – V_{BPN10})		48	96	ns
t_{HRISE}	High-side driver rise time(3)	C_{HDRV} = 2200 pF, (V_{IN} – V_{BPN10})		36	72	
t_{LFALL}	Low-side driver fall time(3)	C_{LDRV} = 2200 pF, BP10		24	48	
t_{LRISE}	Low-side driver rise time(3)	C_{LDRV} = 2200 pF, BP10		48	96	
V_{OH}	High-level ouput voltage, HDRV	I_{HDRV} = 0.1 A , (V_{IN} – V_{HDRV})		1.0	1.4	V
V_{OL}	Low-level ouput voltage, HDRV	I_{HDRV} = 0.1 A , (V_{HDRV} – V_{BPN10})			0.75	
V_{OH}	High-level ouput voltage, LDRV	I_{LDRV} = 0.1 A, (V_{BP10} – V_{LDRV})		1.0	1.5	
V_{OL}	Low-level ouput voltage, LDRV	I_{LDRV} = 0.1 A			0.5	
	Minimum controllable pulse width			100	150	ns
BPN10 REGULATOR						
V_{BPN10}	Output voltage	Outputs off	–7.5	–8.5	–9.5	V
RECTIFIER ZERO CURRENT COMPARATOR (TPS40060 ONLY)						
V_{SW}	Switch voltage	LDRV output OFF	–6	0	6	mV
SW NODE						
I_{LEAK}	Leakage current(3)				1	µA
THERMAL SHUTDOWN						
T_{SD}	Shutdown temperature(3)			165		°C
	Hysteresis(3)			25		
UNDERVOLTAGE LOCKOUT						
V_{UVLO}	Undervoltage lockout threshold voltage, BP10	R_{KFF} = 10 kΩ	6.25	6.5	7.5	V
	Undervoltage lockout hysteresis			0.4		
V_{KFF}	KFF programmable threshold voltage	R_{KFF} = 82.5 kΩ	9	10	11	

(3) Ensured by design. Not production tested.

Copyright © 2002–2013, Texas Instruments Incorporated

Terminal Functions

TERMINAL NAME	TERMINAL NO.	I/O	DESCRIPTION
BP5	3	O	5-V reference. This pin should be bypassed to ground with a 0.1-µF ceramic capacitor. This pin may be used with an external DC load of 1 mA or less.
BP10	11	O	10-V reference used for gate drive of the N-channel synchronous rectifier. This pin should be bypassed by a 1-µF ceramic capacitor. This pin may be used with an external DC load of 1 mA or less.
BPN10	13	O	Negative 8-V reference with respect to VIN. This voltage is used to provide gate drive for the high side P-channel MOSFET. This pin should be bypassed to VIN with a 0.1-µF capacitor
COMP	8	I	Output of the error amplifier, input to the PWM comparator. A feedback network is connected from this pin to the VFB pin to compensate the overall loop. The comp pin is internally clamped above the peak of the ramp to improve large signal transient response.
HDRV	14	O	Floating gate drive for the high-side P-channel MOSFET. This pin switches from VIN (MOSFET off) to BPN10 (MOSFET on).
ILIM	16	I	Current limit pin, used to set the overcurrent threshold. An internal current sink from this pin to ground sets a voltage drop across an external resistor connected from this pin to VIN. The voltage on this pin is compared to the voltage drop (VIN -SW) across the high side MOSFET during conduction.
KFF	1	I	A resistor is connected from this pin to VIN to program the amount of voltage feed-forward. The current fed into this pin is internally divided and used to control the slope of the PWM ramp.
LDRV	10	I	Gate drive for the N-channel synchronous rectifier. This pin switches from BP10 (MOSFET on) to ground (MOSFET off).
PGND	9		Power ground reference for the device. There should be a low-impedance connection from this point to the source of the power MOSFET.
RT	2	I	A resistor is connected from this pin to ground to set the internal oscillator ramp charging current and switching frequency.
SGND	5		Signal ground reference for the device.
SS/SD	6	I	Soft-start programming pin. A capacitor connected from this pin to ground programs the soft-start time. The capacitor is charged with an internal current source of 2.3 µA. The resulting voltage ramp on the SS pin is used as a second non-inverting input to the error amplifier. The output voltage begins to rise when $V_{SS/SD}$ is approximately 0.85 V. The output continues to rise and reaches regulation when $V_{SS/SD}$ is approximately 1.55 V. The controller is considered shut down when $V_{SS/SD}$ is 125 mV or less. All internal circuitry is inactive. The internal circuitry is enabled when $V_{SS/SD}$ is 210 mV or greater. When $V_{SS/SD}$ is less than approximately 0.85 V, the outputs cease switching and the output voltage (V_{OUT}) decays while the internal circuitry remains active.
SW	12	I	This pin is connected to the switched node of the converter and used for overcurrent sensing. This pin is used for zero current sensing in the TPS40060.
SYNC	4	I	Synchronization input for the device. This pin can be used to synchronize the oscillator to an external master frequency.
VFB	7	I	Inverting input to the error amplifier. In normal operation the voltage on this pin is equal to the internal reference voltage, 0.7 V.
VIN	15	I	Supply voltage for the device.

Copyright © 2002–2013, Texas Instruments Incorporated

SIMPLIFIED BLOCK DIAGRAM

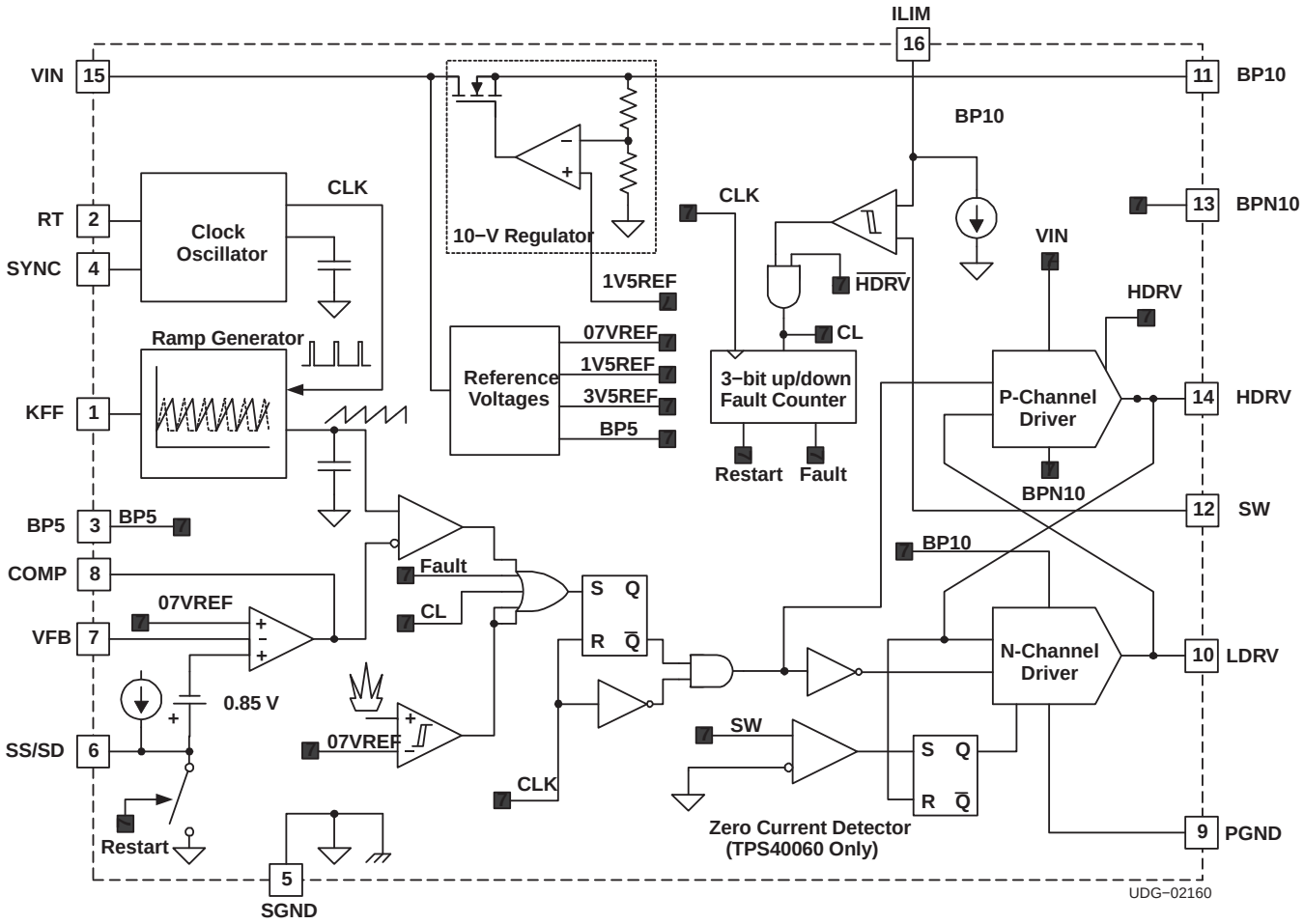

Copyright © 2002–2013, Texas Instruments Incorporated

APPLICATION INFORMATION

The TPS40060/61 family of parts allows the user to optimize the PWM controller to the specific application.

The TPS40061 is the controller of choice for synchronous buck designs which will include most applications. It has two quadrant operation and will source or sink output current. This provides the best transient response.

The TPS40060 operates in one quadrant and sources output current only, allowing for paralleling of converters and ensures that one converter does not sink current from another converter. This controller also emulates a standard buck converter at light loads where the inductor current goes discontinuous. At continuous output inductor currents the controller operates as a synchronous buck converter to optimize efficiency.

SW NODE RESISTOR

The SW node of the converter will be negative during the *dead time* when both the upper and lower MOSFETs are off. The magnitude of this negative voltage is dependent on the lower MOSFET body diode and the output current which flows during this dead time. This negative voltage could affect the operation of the controller, especially at low input voltages.

Therefore, a 10-Ω resistor must be placed between the lower MOSFET drain and pin 12 (SW) of the controller as shown in Figure 14 as R_{SW}.

SETTING THE SWITCHING FREQUENCY (PROGRAMMING THE CLOCK OSCILLATOR)

The TPS40060 and TPS40061 have independent clock oscillator and ramp generator circuits. The clock oscillator serves as the master clock to the ramp generator circuit. The switching frequency, f_{SW} in kHz, of the clock oscillator is set by a single resistor (R_T) to ground. The clock frequency is related to R_T, in kΩ by Equation 1 and the relationship is charted in Figure 2.

$$R_T = \left(\frac{1}{f_{SW} \times 17.82 \times 10^{-6}} - 23\right) k\Omega \tag{1}$$

PROGRAMMING THE RAMP GENERATOR CIRCUIT

The ramp generator circuit provides the actual ramp used by the PWM comparator. The ramp generator provides voltage feed-forward control by varying the PWM ramp slope with line voltage, while maintaining a constant ramp magnitude. Varying the PWM ramp directly with line voltage provides excellent response to line variations since the PWM does not have to wait for loop delays before changing the duty cycle. (See Figure 1).

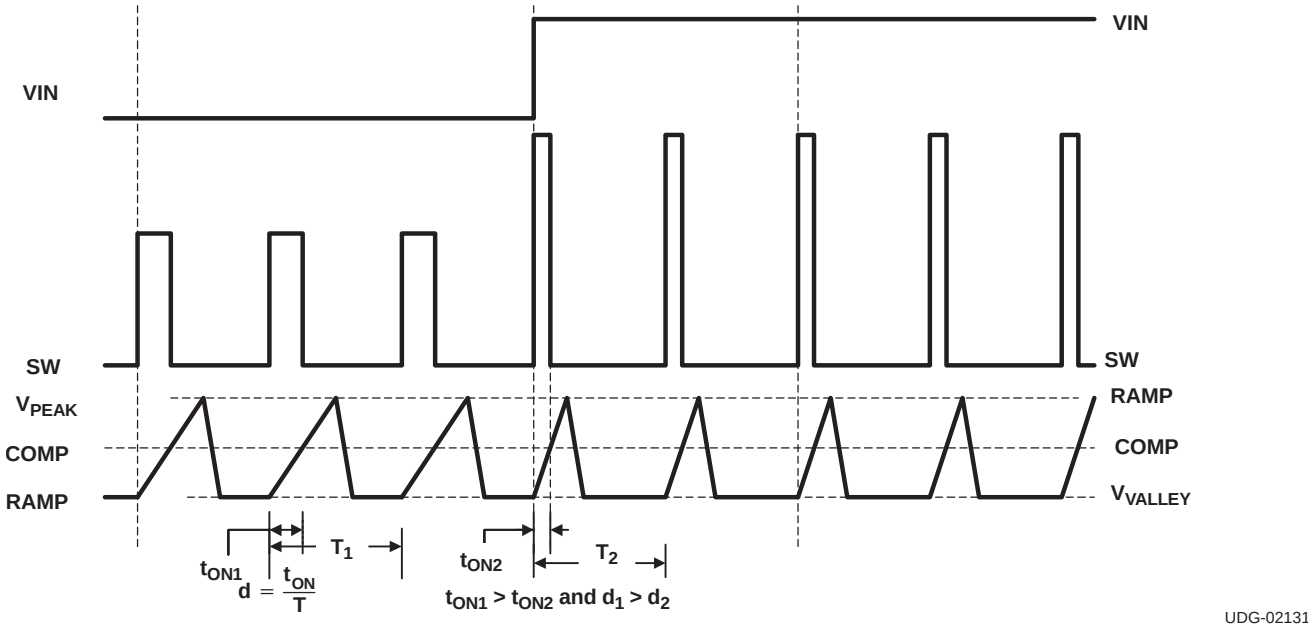

Figure 1. Voltage Feed-Forward Effect on PWM Duty Cycle

The PWM ramp must be faster than the master clock frequency or the PWM is prevented from starting. The PWM ramp time is programmed via a single resistor (R_{KFF}) pulled up to V_{IN}. R_{KFF} is related to R_T, and the minimum input voltage, $V_{IN(min)}$ through the following:

$$R_{KFF} = \left(V_{IN\,(min)} - 3.5\right) \times \left(65.27 \times R_T + 1502\right) \ (\Omega)$$

where:

- V_{IN} is the desired start-up (UVLO) input voltage
- R_T is the timing resistor in kΩ (2)

See the section on UVLO operation for further description.

The curve showing the feedforward impedance required for a given switching frequency, f_{SW}, at various input voltages is shown in Figure 3.

For low input voltage and high duty cycle applications, the voltage feed-forward may limit the duty cycle prematurely. This does not occur for most applications. The voltage control loop controls the duty cycle and regulates the output voltages. For more information on large duty cycle operation, refer to Application Note (SLUA310).

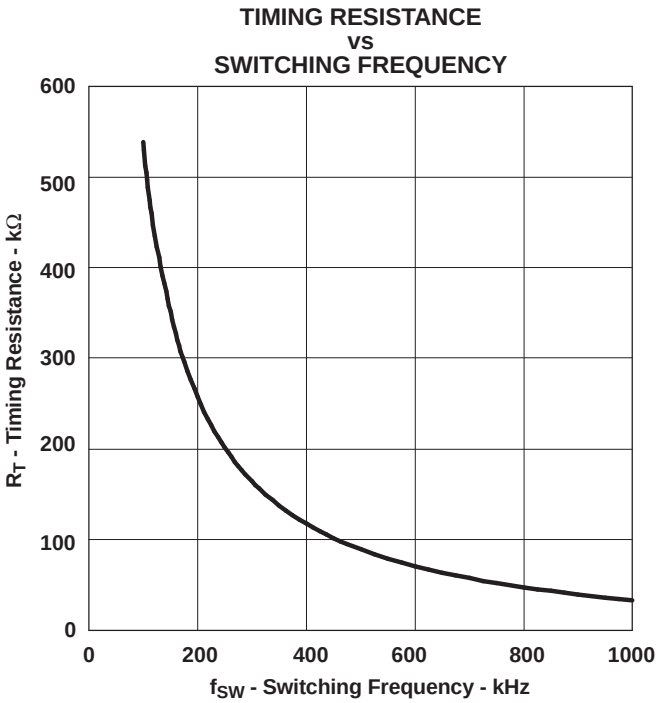

Figure 2.

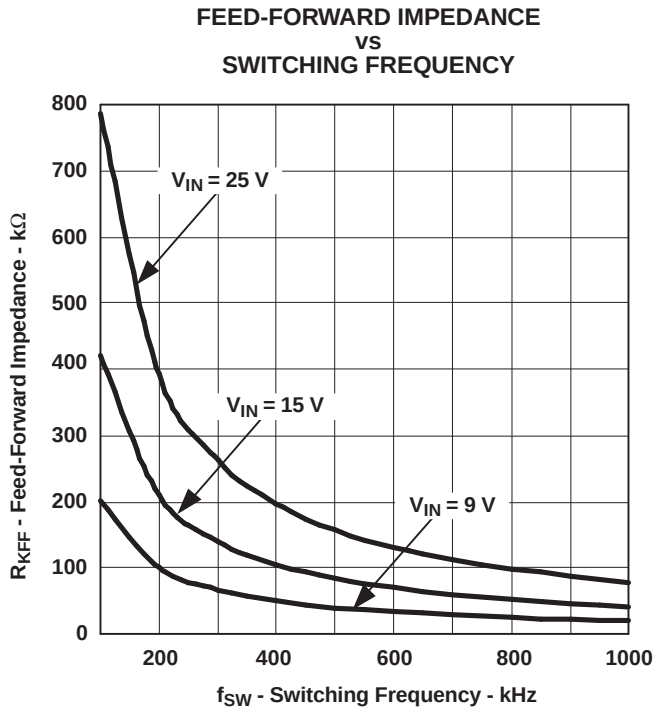

Figure 3.

UVLO OPERATION

The TPS40060 and TPS40061 use both fixed and variable (user programmable) UVLO protection. The fixed UVLO monitors the BP10 and BP5 bypass voltages. The UVLO circuit holds the soft-start low until the BP5 and BP10 voltage rails have exceeded their thresholds and the input voltage has exceed the user programmable undervoltage threshold.

The TPS40060 and TPS40061 use the feed-forward pin, KFF, as a user programmable low-line UVLO detection. This variable low-line UVLO threshold compares the PWM ramp duration to the oscillator clock period. An undervoltage condition exists if the device receives a clock pulse before the ramp has reached 90% of its full amplitude. The ramp duration is a function of the ramp slope, which is directly related to the current into the KFF pin. The KFF current is a function of the input voltage and the resistance from KFF to the input voltage. The KFF resistor can be referenced to the oscillator frequency as described in Equation 3:

$$R_{KFF} = \left(V_{IN\,(min)} - 3.5\right) \times \left(65.27 \times R_T + 1502\right) \ (\Omega)$$

Copyright © 2002–2013, Texas Instruments Incorporated

where:

- V_{IN} is the desired start-up (UVLO) input voltage
- R_T is the timing resistor in kΩ (3)

The variable UVLO function utilizes a 3-bit full adder to prevent spurious shut-downs or turn-ons due to spikes or fast line transients. When the adder reaches a total of seven counts in which the ramp duration is shorter the clock cycle a powergood signal is asserted, a soft-start initiated, and the upper and lower MOSFETs are turned off.

Once the soft-start is initiated, the UVLO circuit must see a total count of seven cycles in which the ramp duration is longer than the clock cycle before an undervoltage condition is declared (See Figure 4).

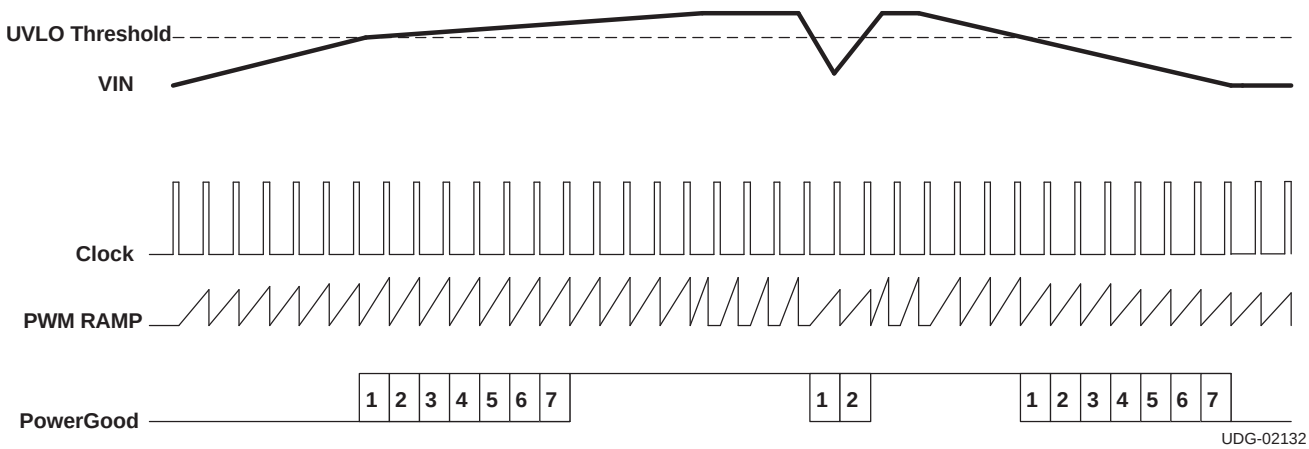

Figure 4. Undervoltage Lockout Operation

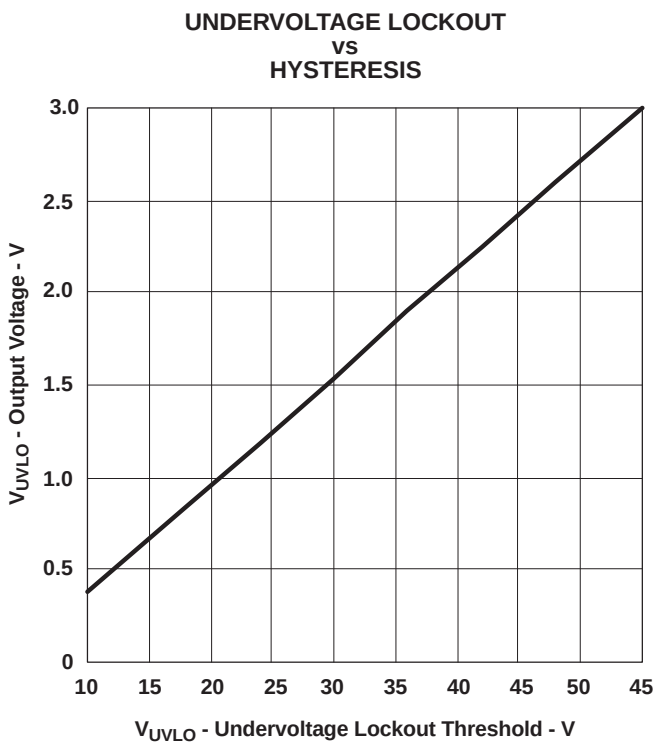

Figure 5.

The impedance of the input voltage can cause the input voltage, at the TPS4006x, to sag when the converter starts to operate and draw current from the input source. Therefore, there is voltage hysteresis that prevents nuisance shutdowns at the UVLO point.

With RT chosen to select the operating frequency and RKFF chosen to select the start-up voltage, the amount of hysteresis voltage is shown in Figure 5.

PROGRAMMING SOFT START

TPS4006x uses a closed-loop approach to ensure a controlled ramp on the output during start-up. Soft-start is programmed by charging an external capacitor (C_{SS}) via an internally generated current source. The voltage on C_{SS} minus 0.85 V, is fed into a separate non-inverting input to the error amplifier (in addition to FB and 0.7-V V_{REF}). The loop is closed on the lower of the (V_{CSS} – 0.85 V) voltage or the internal reference voltage (0.7-V V_{REF}). Once the (V_{CSS} – 0.85 V) voltage rises above the internal reference voltage, regulation is based on the internal reference. To ensure a controlled ramp-up of the output voltage the soft-start time should be greater than the L-C_O time constant as described in Equation 4.

$$t_{START} \geq 2\pi \times \sqrt{L \times C_O} \quad \text{(seconds)} \tag{4}$$

There is a direct correlation between t_{START} and the input current required during start-up. The faster t_{START}, the higher the input current required during start-up. This relationship is describe in more detail in the section titled, Programming the Current Limit, which follows. The soft-start capacitance, C_{SS}, is described in Equation 5.

For applications in which the V_{IN} supply ramps up slowly, (typically between 50 ms and 100 ms) it may be necessary to increase the soft-start time to between approximately 2 ms and 5 ms to prevent nuisance UVLO tripping. The soft-start time should be longer than the time that the V_{IN}supply transitions between 6 V and 7 V.

$$C_{SS} = \frac{2.3\ \mu A}{0.7\ V} \times t_{START} \quad \text{(Farads)} \tag{5}$$

Copyright © 2002–2013, Texas Instruments Incorporated

PROGRAMMING CURRENT LIMIT

This device uses a two-tier approach for overcurrent protection. The first tier is a pulse-by-pulse protection scheme. Current limit is implemented on the high-side MOSFET by sensing the voltage drop across the MOSFET when the gate is driven low. The MOSFET voltage is compared to the voltage dropped across a resistor connected from VIN pin to the ILIM pin when driven by a constant current sink. If the voltage drop across the MOSFET exceeds the voltage drop across the ILIM resistor, the switching pulse is immediately terminated. The MOSFET remains off until the next switching cycle is initiated.

The second tier consists of a fault counter. The fault counter is incremented on an overcurrent pulse and decremented on a clock cycle without an overcurrent pulse. When the counter reaches seven (7) a restart is issued and seven soft-start cycles are initiated. Both the upper and lower MOSFETs are turned off during this period. The counter is decremented on each soft-start cycle. When the counter is decremented to zero, the PWM is re-enabled. If the fault has been removed the output starts up normally. If the output is still present the counter counts seven overcurrent pulses and re-enters the second-tier fault mode. See Figure 7 for typical overcurrent protection waveforms.

The minimum current limit setpoint (I_{LIM}) depends on t_{START}, C_O, V_O, and the load current at start-up (I_{LOAD}).

$$I_{LIM} = \left[\frac{(C_O \times V_O)}{t_{START}}\right] + I_{LOAD}\ (A) \tag{6}$$

The current limit programming resistor (R_{ILIM}) is calculated using Equation 7. Care must be taken in choosing the values used for V_{OS} and I_{SINK} in the equation. In order to ensure the output current at the overcurrent level, the minimum value of I_{SINK} and the maximum value of V_{OS} must be used.

$$R_{ILIM} = \frac{I_{OC} \times R_{DS(on)[max]}}{I_{SINK}} + \frac{V_{OS}}{I_{SINK}}\quad (\Omega)$$

where:

- I_{SINK} is the current into the ILIM pin and is nominally 8.3 µA, minimum
- I_{OC} is the overcurrent setpoint which is the DC output current plus one-half of the peak inductor current
- V_{OS} is the overcurrent comparator offset and is 50 mV maximum (7)

BP5, BP10 AND BPN10 INTERNAL VOLTAGE REGULATOR

Start-up characteristics of the BP5, BP10 and BPN10 regulators are shown in Figure 7. Slight variations in the BP5 occurs dependent upon the switching frequency. Variation in the BPN10 and BP10 regulation characteristics is also based on the load presented by switching the external MOSFETs.

Copyright © 2002–2013, Texas Instruments Incorporated

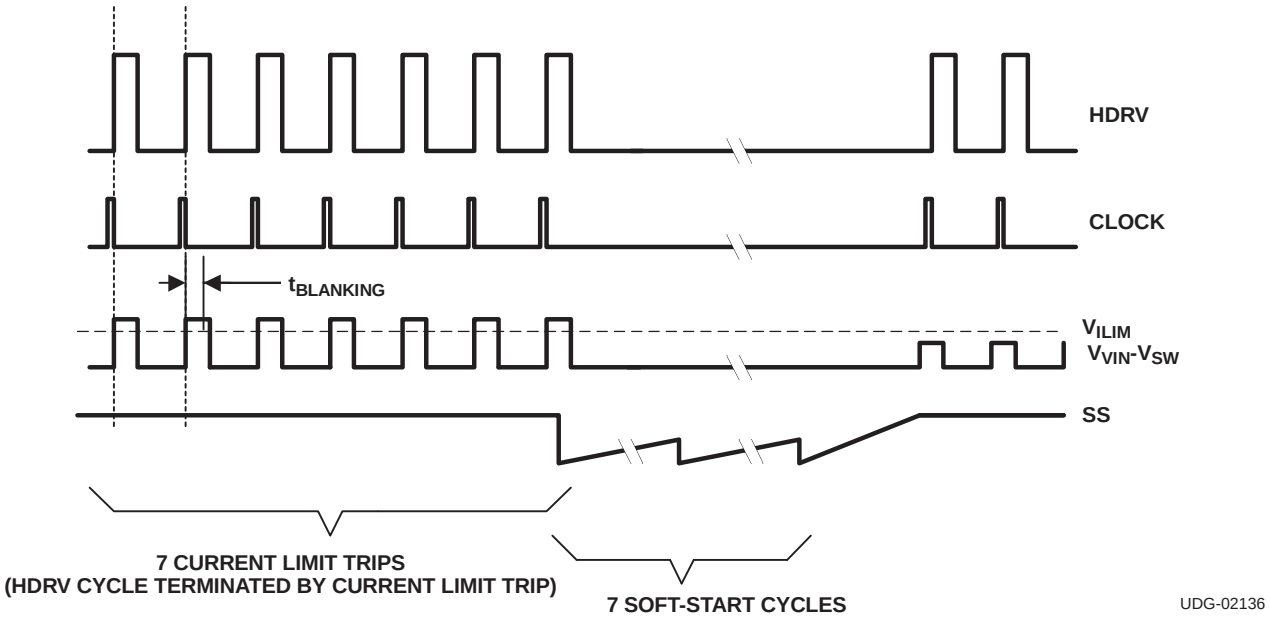

Figure 6. Typical Current Limit Protection Waveforms

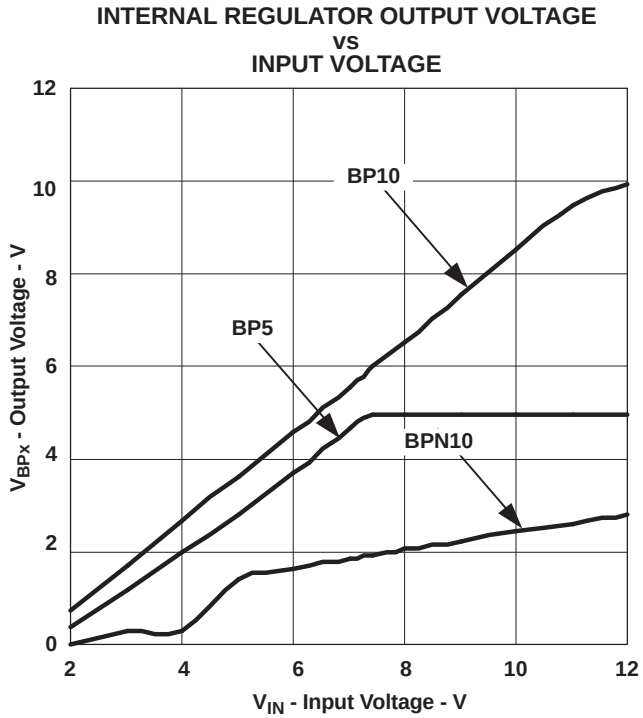

Figure 7.

CALCULATING THE BPN10 AND BP10V BYPASS CAPACITOR

The BPN10 capacitance provides energy for the high-side driver. The BPN10 capacitor should be a good quality, high-frequency capacitor. The size of the bypass capacitor depends on the total gate charge of the high-side MOSFET and the amount of droop allowed on the bypass capacitor. The BPN10 capacitance is described in Equation 8.

Copyright © 2002–2013, Texas Instruments Incorporated

$$C_{BPN10} = \frac{Q_g}{\Delta V} \quad (F) \tag{8}$$

The 10-V reference pin, BP10V needs to provide energy for the synchronous MOSFET gate drive via the BP10V capacitor. Neglecting any efficiency penalty, the BP10V capacitance is described in Equation 9.

$$C_{BP10V} = \frac{Q_{gSR}}{\Delta V} \quad (F) \tag{9}$$

SYNCHRONIZING TO AN EXTERNAL SUPPLY

The TPS4006x can be synchronized to an external clock through the SYNC pin. The SW node rises on the falling edge of the SYNC signal. The synchronization frequency should be in the range of 20% to 30% higher than its programmed free-run frequency. The clock frequency at the SYNC pin replaces the master clock generated by the oscillator circuit. Pulling the SYNC pin low programs the TPS4006x to freely run at the frequency programmed by R_T.

Internally, the SYNC pin has a pull-down current between 5 µA and 10 µA. In order to synchronize the device to an external clock signal, the SYNC pin has to be overdriven from the external clock circuit. Normal logic gates or an external MOSFET with a pull-up resistor of 10 kΩ is adequate.

Internally there is a delay of between approximately 50 ns and 100 ns from the time the SYNC pin is pulled low and the HDRV signal goes low to turn on the upper MOSFET. Additionally, there is some delay as the MOSFET gate charges to turn on the upper MOSFET, typically between 20 ns and 50 ns.

The higher synchronization must be factored in when programming the PWM ramp generator circuit. If the PWM ramp is interrupted by the SYNC pulse, a UVLO condition is declared and the PWM becomes disabled. Typically this is of concern under low-line conditions only. In any case, R_{KFF} needs to be adjusted for the higher switching frequency. In order to specify the correct value for R_{KFF} at the synchronizing frequency, calculate a 'dummy' value for RT that would cause the oscillator to run at the synchronizing frequency. Do not use this value of RT in the design.

$$R_{T(dummy)} = \left(\frac{1}{f_{SYNC} \times 17.82 \times 10^{-6}} - 23\right) k\Omega$$

where:

- f_{SYNC} is the synchronous frequency in kHz (10)

Use the value of $R_{T(dummy)}$ to calculate the value for R_{KFF}.

$$R_{KFF} = \left(V_{IN(min)} - 3.5\,V\right) \times \left(65.27 \times R_{T(dummy)} + 1502\right)\Omega$$

where:

- $R_{T(dummy)}$ is in kΩ (11)

This value of R_{KFF} ensures that UVLO is not engaged when operating at the synchronization frequency.

SELECTING THE INDUCTOR VALUE

The inductor value determines the magnitude of ripple current in the output capacitors as well as the load current at which the converter enters discontinuous mode. Too large an inductance results in lower ripple current but is physically larger for the same load current. Too small an inductance results in larger ripple currents and a greater number of (or more expensive output capacitors for) the same output ripple voltage requirement. A good compromise is to select the inductance value such that the converter doesn't enter discontinuous mode until the load approximated somewhere between 10% and 30% of the rated output. The inductance value is described in Equation 12.

$$L = \frac{\left(V_{IN} - V_O\right) \times V_O}{V_{IN} \times \Delta I \times f_{SW}} \quad (H)$$

where:

- V_O is the output voltage
- ΔI is the peak-to-peak inductor current (12)

CALCULATING THE OUTPUT CAPACITANCE

The output capacitance depends on the output ripple voltage requirement, output ripple current, as well as any output voltage deviation requirement during a load transient.

The output ripple voltage is a function of both the output capacitance and capacitor ESR. The worst case output ripple is described in Equation 13.

$$\Delta V = \Delta I \left[ESR + \left(\frac{1}{8 \times C_O \times f_{SW}} \right) \right] \quad \left(V_{P-P}\right) \tag{13}$$

The output ripple voltage is typically between 90% and 95% due to the ESR component.

The output capacitance requirement typically increases in the presence of a load transient requirement. During a step load, the output capacitance must provide energy to the load (light to heavy load step) or absorb excess inductor energy (heavy-to-light load step) while maintaining the output voltage within acceptable limits. The amount of capacitance depends on the magnitude of the load step, the speed of the loop and the size of the inductor.

Stepping the load from a heavy load to a light load results in an output overshoot. Excess energy stored in the inductor must be absorbed by the output capacitance. The energy stored in the inductor is described in Equation 14 and Equation 15.

$$E_L = \frac{1}{2} \times L \times I^2 \quad (J) \tag{14}$$

where:

$$I^2 = \left[\left(I_{OH}\right)^2 - \left(I_{OL}\right)^2 \right] \quad \left((Amperes)^2\right)$$

where:

- I_{OH} is the output current under heavy load conditions
- I_{OL} is the output current under light load conditions (15)

Energy in the capacitor is given by the following equation:

$$E_C = \frac{1}{2} \times C \times V^2 \quad (J) \tag{16}$$

where:

$$V^2 = \left(V_f\right)^2 - \left(V_i\right)^2 \quad \left(Volts^2\right)$$

where:

- V_f is the final peak capacitor voltage
- V_i is the initial capacitor voltage (17)

By substituting Equation 15 into Equation 14, substituting Equation 17 into Equation 16, setting Equation 14 equal to Equation 16 and solving for C_O yields the following equation.

$$C_O = \frac{L \times \left[\left(I_{OH}\right)^2 - \left(I_{OL}\right)^2 \right]}{\left[\left(V_f\right)^2 - \left(V_i\right)^2 \right]} \quad (F) \tag{18}$$

Loop Compensation

Voltage-mode buck-type converters are typically compensated using Type III networks. Since the TPS40060 and TPS40061 use voltage feedforward control, the gain of the PWM modulator with voltage feedforward circuit must be included. The generic modulator gain is described in Figure 8.

Copyright © 2002–2013, Texas Instruments Incorporated

Duty cycle, D, varies from 0 to 1 as the control voltage, V_C, varies from the minimum ramp voltage to the maximum ramp voltage, V_S. Also, for a synchronous buck converter, $D = V_O / V_{IN}$. To get the control voltage to output voltage modulator gain in terms of the input voltage and ramp voltage,

$$D = \frac{V_O}{V_{IN}} = \frac{V_C}{V_S} \quad \text{or} \quad \frac{V_O}{V_C} = \frac{V_{IN}}{V_S} \tag{19}$$

With the voltage feedforward function, the ramp slope is proportional to the input voltage. Therefore, the moderator DC gain is independent of the change of input voltage. For the TPS40060 and TPS40061 the modulator dc gain is shown in Equation 20, with $V_{IN(min)}$ as the minimum input voltage required to cause the ramp excursion to reach the maximum ramp amplitude of V_{RAMP}.

$$A_{MOD} = \left(\frac{V_{IN(min)}}{V_{RAMP}}\right) \quad \text{or} \quad A_{MOD(dB)} = 20 \times \log\left(\frac{V_{IN(min)}}{V_{RAMP}}\right) \tag{20}$$

Calculate the Poles and Zeros

For a buck converter using voltage mode control there is a double pole due to the output L-C_O. The double pole is located at the frequency calculated in Equation 21.

$$f_{LC} = \frac{1}{2\pi \times \sqrt{L \times C_O}} \quad \text{(Hz)} \tag{21}$$

There is also a zero created by the output capacitance, C_O, and its associated ESR. The ESR zero is located at the frequency calculated in Equation 22.

$$f_Z = \frac{1}{2\pi \times ESR \times C_O} \quad \text{(Hz)} \tag{22}$$

Calculate the value of R_{BIAS} to set the output voltage, V_O.

$$R_{BIAS} = \frac{0.7 \times R1}{V_O - 0.7}\Omega \tag{23}$$

The maximum crossover frequency (0 dB loop gain) is set by Equation 24.

$$f_C = \frac{f_{SW}}{4} \quad \text{(Hertz)} \tag{24}$$

Typically, f_C is selected to be close to the midpoint between the L-C_O double pole and the ESR zero. At this frequency, the control to output gain has a –2 slope (-40 dB/decade), while the Type III topology has a +1 slope (20 dB/decade), resulting in an overall closed loop –1 slope (–20 dB/decade). Figure 9 shows the modulator gain, L-C filter, output capacitor ESR zero, and the resulting response to be compensated.

A Type III topology, shown in Figure 10, has two zero-pole pairs in addition to a pole at the origin. The gain and phase boost of a Type III topology is shown in Figure 11. The two zeros are used to compensate the L-C_O double pole and provide phase boost. The double pole is used to compensate for the ESR zero and provide controlled gain roll-off. In many cases the second pole can be eliminated and the amplifier's gain roll-off used to roll-off the overall gain at higher frequencies.

Copyright © 2002–2013, Texas Instruments Incorporated

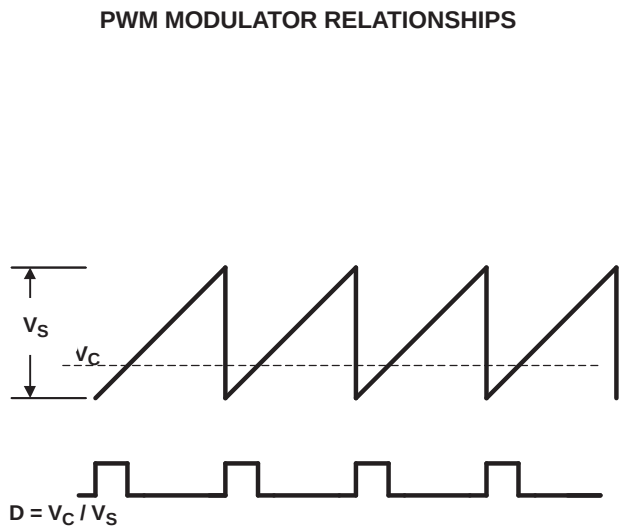

Figure 8.

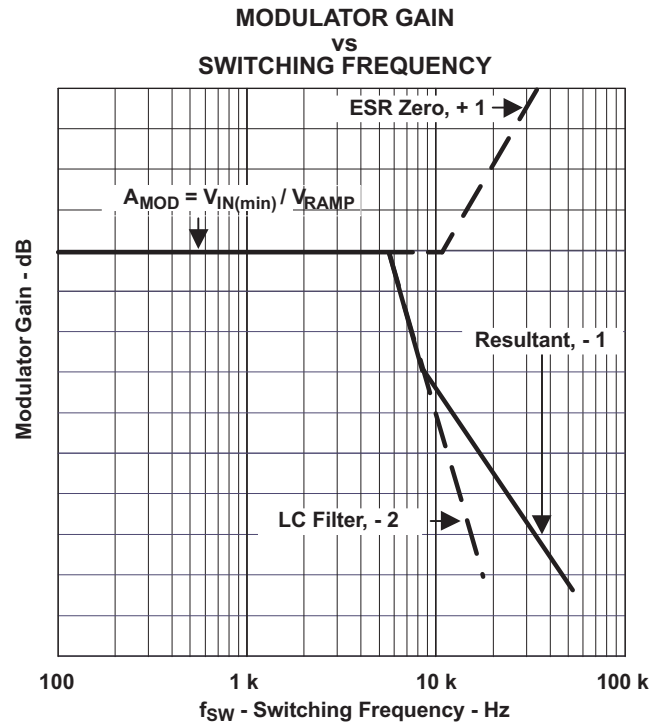

Figure 9.

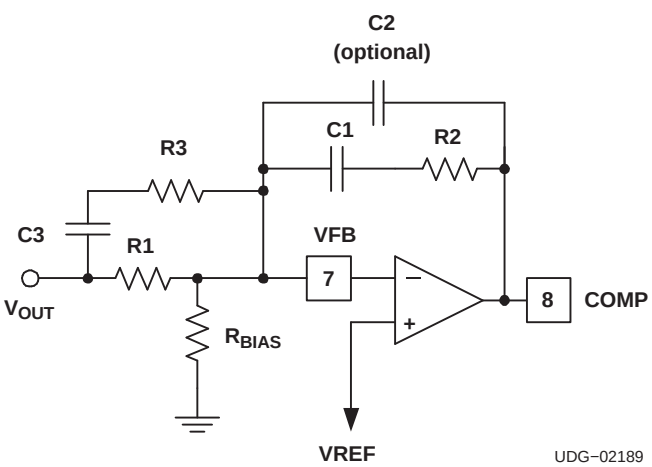

Figure 10. Type III Compensation of Configuration

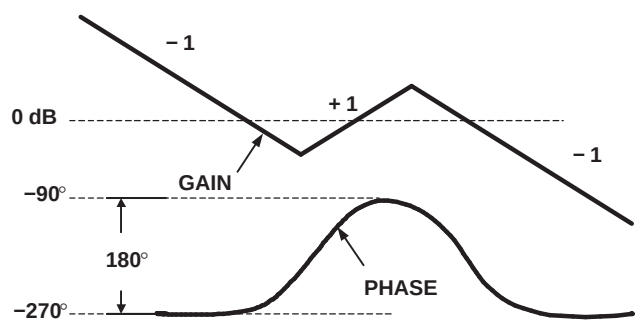

Figure 11. Type III Compensation Gain and Phase

The poles and zeros for a type III network are described in Equation 25.

$$f_{Z1} = \frac{1}{2\pi \times R2 \times C1} \text{ (Hz)} \qquad f_{Z2} = \frac{1}{2\pi \times R1 \times C3} \text{ (Hz)}$$

$$f_{P1} = \frac{1}{2\pi \times R2 \times C2} \text{ (Hz)} \qquad f_{P2} = \frac{1}{2\pi \times R3 \times C3} \text{ (Hz)} \tag{25}$$

The value of R1 is somewhat arbitrary, but influences other component values. A value between 50kΩ and 100kΩ usually yields reasonable values.

The unity gain frequency is described in Equation 26.

$$f_C = \frac{1}{2\pi \times R1 \times C2 \times G} \text{ (Hertz)}$$

where

- G is the reciprocal of the modulator gain at f_C (26)

Copyright © 2002–2013, Texas Instruments Incorporated

The modulator gain as a function of frequency at f_C, is described in Equation 27.

$$AMOD(f) = AMOD \times \left(\frac{f_{LC}}{f_C}\right)^2 \quad \text{and} \quad G = \frac{1}{AMOD(f)} \tag{27}$$

Care must be taken not to load down the output of the error amplifier with the feedback resistor, R2, that is too small. The error amplifier has a finite output source and sink current which must be considered when sizing R2. Too small a value does not allow the output to swing over its full range.

$$R2_{(MIN)} = \frac{V_{C\,(max)}}{I_{SOURCE\,(min)}}\,(\Omega) = \frac{3.45\ V}{2.0\ mA} = 1.725\ k\Omega \tag{28}$$

dv/dt INDUCED TURN-ON

MOSFETs are susceptible to dv/dt turn-on particularly in high-voltage (V_{DS}) applications. The turn-on is caused by the capacitor divider that is formed by C_{GD} and C_{GS}. High dv/dt conditions and drain-to-source voltage, on the MOSFET causes current flow through C_{GD} and causes the gate-to-source voltage to rise. If the gate-to-source voltage rises above the MOSFET threshold voltage, the MOSFET turns on, resulting in large shoot-through currents. Therefore the SR MOSFET should be chosen so that the C_{GD} capacitance is smaller than the C_{GS} capacitance. A 2-Ω to 5-Ω resistor in the upper MOSFET gate lead shapes the turn-on and dv/dt of the SW node and helps reduce the induced turn-on.

HIGH-SIDE MOSFET POWER DISSIPATION

The power dissipated in the external high-side MOSFET is comprised of conduction and switching losses. The conduction losses are a function of the I_{RMS} current through the MOSFET and the $R_{DS(on)}$ of the MOSFET. The high-side MOSFET conduction losses are defined by Equation 29.

$$P_{COND} = \left(I_{RMS}\right)^2 \times R_{DS(on)} \times \left(1 + TC_R \times \left[T_J - 25^\circ C\right]\right) \quad (W)$$

where:

- TC_R is the temperature coefficient of the MOSFET $R_{DS(on)}$ (29)

The TC_R varies depending on MOSFET technology and manufacturer but is typically ranges between 3500 ppm/°C and 1000 ppm/°C.

The I_{RMS} current for the high side MOSFET is described in Equation 30.

$$I_{RMS} = I_O \times \sqrt{d} \quad \left(Amperes_{RMS}\right) \tag{30}$$

The switching losses for the high-side MOSFET are described in Equation 31.

$$P_{SW(fsw)} = \left(V_{IN} \times I_{OUT} \times t_{SW}\right) \times f_{SW} \quad (Watts)$$

where:

- I_O is the DC output current
- t_{SW} is the switching rise time, typically < 20 ns
- f_{SW} is the switching frequency (31)

Typical switching waveforms are shown in Figure 12.

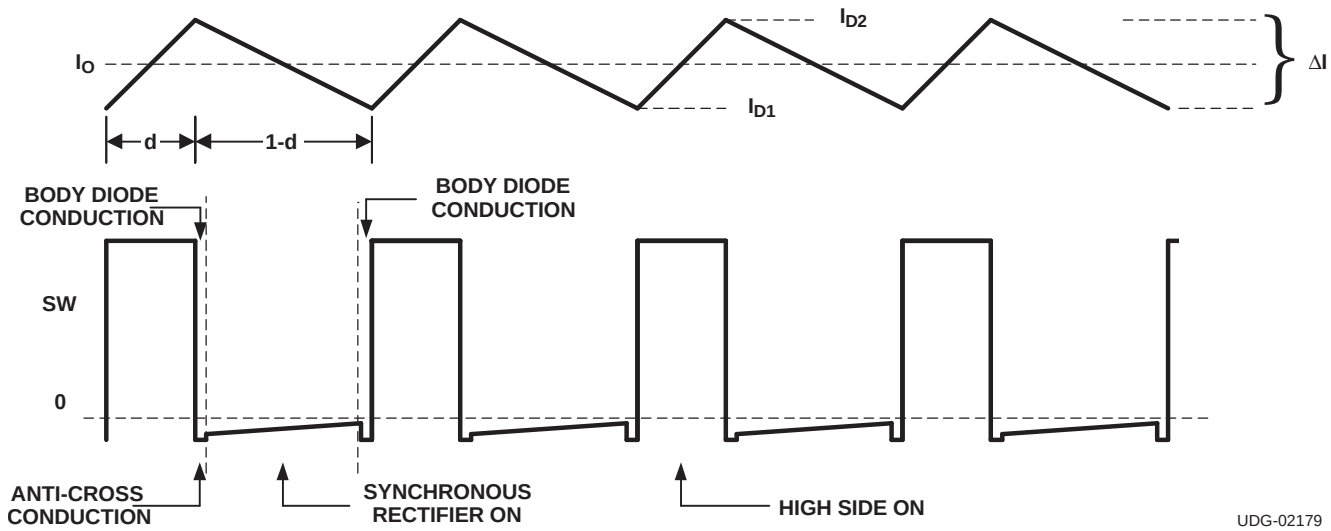

Figure 12. Inductor Current and SW Node Waveforms

The maximum allowable power dissipation in the MOSFET is determined by the following equation.

$$P_T = \frac{(T_J - T_A)}{\theta_{JA}} \quad (W) \tag{32}$$

where:

$$P_T = P_{COND} + P_{SW(fsw)} \quad (W) \tag{33}$$

and Θ_{JA} is the package thermal impedance.

SYNCHRONOUS RECTIFIER MOSFET POWER DISSIPATION

The power dissipated in the synchronous rectifier MOSFET is comprised of three components: $R_{DS(on)}$ conduction losses, body diode conduction losses, and reverse recovery losses. $R_{DS(on)}$) conduction losses can be found using Equation 29 and the RMS current through the synchronous rectifier MOSFET is described in Equation 34.

$$I_{RMS} = I_O \times \sqrt{1 - d} \quad (A_{RMS}) \tag{34}$$

The body-diode conduction losses are due to forward conduction of the body diode during the anti-cross conduction delay time. The body diode conduction losses are described by Equation 35.

$$P_{DC} = 2 \times I_O \times V_F \times t_{DELAY} \times f_{SW} \quad (W)$$

where:

- V_F is the body diode forward voltage
- t_{DELAY} is the delay time just before the SW node rises (35)

The 2-multiplier is used because the body-diode conducts twice during each cycle (once on the rising edge and once on the falling edge)

The reverse recovery losses are due to the time it takes for the body diode to recovery from a forward bias to a reverse blocking state. The reverse recovery losses are described in Equation 36.

$$P_{RR} = 0.5 \times Q_{RR} \times V_{IN} \times f_{SW} \quad (W)$$

where:

- Q_{RR} is the reverse recovery charge of the body diode (36)

The total synchronous rectifier MOSFET power dissipation is described in Equation 37.

$$P_{SR} = P_{DC} + P_{RR} + P_{COND} \quad (W) \tag{37}$$

Copyright © 2002–2013, Texas Instruments Incorporated

TPS40060/TPS40061 POWER DISSIPATION

The power dissipation in the TPS40060 and TPS40061 is largely dependent on the MOSFET driver currents and the input voltage. The driver current is proportional to the total gate charge, Qg, of the external MOSFETs. Driver power (neglecting external gate resistance, (refer to the second reference in the REFERENCES section) can be calculated from Equation 38.

$$P_D = Q_g \times V_{DR} \times f_{SW} \quad (W / driver) \tag{38}$$

And the total power dissipation in the device, assuming MOSFETs with similar gate charges for both the high-side and synchronous rectifier is described in Equation 39.

$$P_T = \left(\frac{2 \times P_D}{V_{DR}} + I_Q\right) \times V_{IN} \quad (W) \tag{39}$$

or

$$P_T = \left[\left(2 \times Q_g \times f_{SW}\right) + I_Q\right] \times V_{IN} \quad (W)$$

where:

- I_Q is the quiescent operating current (neglecting drivers) (40)

The maximum power capability of the device's PowerPad package is dependent on the layout as well as air flow. The thermal impedance from junction to air, assuming 2 oz. copper trace and thermal pad with solder and no air flow.

Θ_{JA} = 36.51°C/W

The maximum allowable package power dissipation is related to ambient temperature by Equation 36. Substituting Equation 32 into Equation 40 and solving for f_{SW} yields the maximum operating frequency for the TPS40060 and TPS40061. The result is:

$$f_{SW} = \frac{\left(\left[\frac{(T_J - T_A)}{(\theta_{JA} \times V_{IN})}\right] - I_Q\right)}{(2 \times Q_g)} \quad (Hz) \tag{41}$$

LAYOUT CONSIDERATIONS

THE PowerPAD™ PACKAGE

The PowerPAD package provides low thermal impedance for heat removal from the device. The PowerPAD derives its name and low thermal impedance from the large bonding pad on the bottom of the device. For maximum thermal performance, the circuit board must have an area of solder-tinned-copper underneath the package. The dimensions of this area depends on the size of the PowerPAD package. For a 16-pin TSSOP (PWP) package the dimensions of the circuit board pad are 5 mm x 3.4 mm. The dimensions of the package pad are shown in Figure 13.

Thermal vias connect this area to internal or external copper planes and should have a drill diameter sufficiently small so that the via hole is effectively plugged when the barrel of the via is plated with copper. This plug is needed to prevent wicking the solder away from the interface between the package body and the solder-tinned area under the device during solder reflow. Drill diameters of 0.33 mm (13 mils) works well when 1-oz copper is plated at the surface of the board while simultaneously plating the barrel of the via. If the thermal vias are not plugged when the copper plating is performed, then a solder mask material should be used to cap the vias with a diameter equal to the via diameter of 0.1 mm minimum. This capping prevents the solder from being wicked through the thermal vias and potentially creating a solder void under the package. Refer to *PowerPAD Thermally Enhanced Package* (see REFERENCES section) for more information on the PowerPAD package.

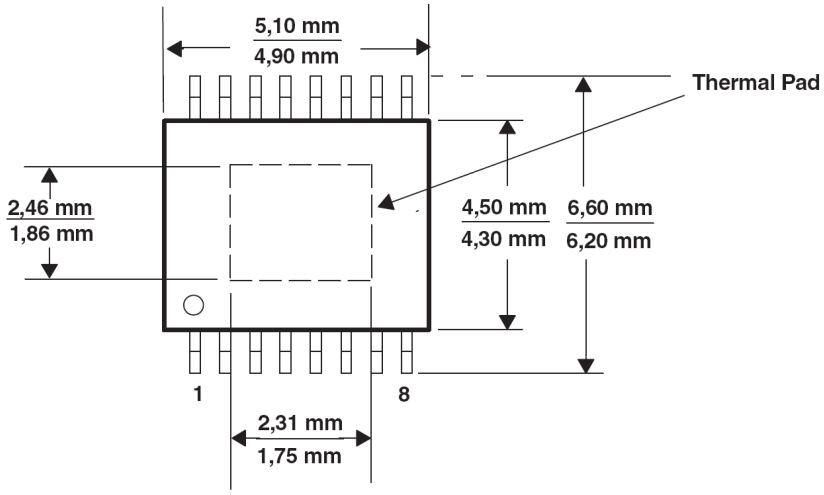

Figure 13. PowerPAD Dimensions

MOSFET PACKAGING

MOSFET package selection depends on MOSFET power dissipation and the projected operating conditions. In general, for a surface-mount applications, the DPAK style package provides the lowest thermal impedance (θ_{JA}) and, therefore, the highest power dissipation capability. However, the effectiveness of the DPAK depends on proper layout and thermal management. The θ_{JA}specified in the MOSFET data sheet refers to a given copper area and thickness. In most cases, a thermal impedance of 40°C/W requires one square inch of 2-ounce copper on a G-10/FR-4 board. Lower thermal impedances can be achieved at the expense of board area. Please refer to the selected MOSFET's data sheet for more information regarding proper mounting.

GROUNDING AND CIRCUIT LAYOUT CONSIDERATIONS

The device provides separate signal ground (SGND) and power ground (PGND) pins. It is important that circuit grounds are properly separated. Each ground should consist of a plane to minimize its impedance if possible. The high power *noisy* circuits such as the output, synchronous rectifier, MOSFET driver decoupling capacitor (BP10), and the input capacitor should be connected to PGND plane at the input capacitor.

Sensitive nodes such as the FB resistor divider, R_T, and ILIM should be connected to the SGND plane. The SGND plane should only make a single point connection to the PGND plane.

Copyright © 2002–2013, Texas Instruments Incorporated

Component placement should ensure that bypass capacitors (BP10, BP5, and BPN10) are located as close as possible to their respective power and ground pins. Also, sensitive circuits such as FB, RT and ILIM should not be located near high dv/dt nodes such as HDRV, LDRV, BPN10, and the switch node (SW).

DESIGN EXAMPLE

- Input voltage: 18 V_{DC} to 55 V_{DC}
- Output voltage: 3.3 V ±2%
- Output current: 5 A (maximum, steady-state), 7 A (surge, 10-ms duration, 10% duty cycle maximum)
- Output ripple: 33 mV_{P-P} at 5 A
- Output load response: 0.3 V => 10% to 90% step load change
- Operating temperature: –40°C to 85°C
- f_{SW} = 130 kHz

1. Calculate maximum and minimum duty cycles

$$d_{MIN} = \frac{V_{O(min)}}{V_{IN(max)}} = 0.0588 \qquad d_{MAX} = \frac{V_{O(max)}}{V_{IN(min)}} = = 0.187 \tag{42}$$

2. Select switching frequency

The switching frequency is based on the minimum duty cycle ratio and the propagation delay of the current limit comparator. In order to maintain current limit capability, the on time of the upper MOSFET, t_{ON}, must be greater than 330 ns (see Electrical Characteristics table). Therefore

$$\frac{V_{O(min)}}{V_{IN(max)}} = \frac{t_{ON}}{T_{SW}} \quad \text{or} \tag{43}$$

$$\frac{1}{T_{SW}} = f_{SW} = \left[\frac{\left(\frac{V_{O(min)}}{V_{IN(max)}}\right)}{T_{ON}}\right] \tag{44}$$

Using 400 ns to provide margin,

$$f_{SW} = \frac{0.0588}{400\ \text{ns}} = 147\ \text{kHz} \tag{45}$$

Since the oscillator can vary by 10%, decrease f_{SW}, by 10%

$$f_{SW} = 0.9 \times 147\ \text{kHz} = 130\ \text{kHz}$$

and therefore choose a frequency of 130 kHz.

3. Select ΔI

In this case ΔI is chosen so that the converter enters discontinuous mode at 20% of nominal load.

$$\Delta I = I_O \times 2 \times 0.2 = 5 \times 2 \times 0.2 = 2.0\ \text{A} \tag{46}$$

4. Calculate the high-side MOSFET power losses

Power losses in the high-side MOSFET (Si9407AGY) at 55-V_{IN} where switching losses dominate can be calculated from Equation 46 through Equation 49.

$$I_{RMS} = I_O \times \sqrt{d} = 5 \times \sqrt{0.0588} = 1.2\ \text{A} \tag{47}$$

substituting Equation 47 into Equation 29 yields

$$P_{COND} = 1.2^2 \times 0.12 \times (1 + 0.007 \times (150 - 25)) = 0.324\ \text{W} \tag{48}$$

and from Equation 31, the switching losses can be determined.

$$P_{SW(fsw)} = \left(V_{IN} \times I_O \times t_{SW}\right) \times f_{SW} = 55\ \text{V} \times 5\ \text{A} \times 20\ \text{ns} \times 130\ \text{kHz} = 0.715\ \text{W} \tag{49}$$

The MOSFET junction temperature can be found by substituting Equation 33 into Equation 32

Copyright © 2002–2013, Texas Instruments Incorporated

$$T_J = \left(P_{COND} + P_{SW}\right) \times \theta_{JA} + T_A = (0.324 + 0.715) \times 40 + 85 = 127°C \quad (50)$$

5. Calculate synchronous rectifier losses

The synchronous rectifier MOSFET has two loss components, conduction, and diode reverse recovery losses. The conduction losses are due to I_{RMS} losses as well as body diode conduction losses during the dead time associated with the anti-cross conduction delay.

The I_{RMS} current through the synchronous rectifier from Equation 51

$$I_{RMS} = I_O \times \sqrt{1 - d} = 5 \times \sqrt{1 - 0.0588} = 4.85\ A_{RMS} \quad (51)$$

The synchronous MOSFET conduction loss from Equation 29 is:

$$P_{COND} = 4.85^2 \times 0.011 \times \left(1 + 0.007\left(150 - 25\right)\right) = 0.485\ W \quad (52)$$

The body diode conduction loss from Equation 35 is:

$$P_{DC} = 2 \times I_O \times V_{FD} \times t_{DELAY} \times f_{SW} = 2 \times 5\ A \times 0.8\ V \times 50\ ns \times 130\ kHZ = 0.052\ W \quad (53)$$

The body diode reverse recovery loss from Equation 36 is:

$$P_{RR} = 0.5 \times Q_{RR} \times V_{IN} \times f_{SW} = 0.5 \times 30\ nC \times 55\ V \times 130\ kHz = 0.107\ W \quad (54)$$

The total power dissipated in the synchronous rectifier MOSFET from Equation 37 is:

$$P_{SR} = P_{RR} \times P_{COND} \times P_{DC} = 0.107 + 0.485 + 0.052 = 0.644\ W \quad (55)$$

The junction temperature of the synchronous rectifier at 85°C is:

$$T_J = P_{SR} \times \theta_{JA} + T_A = \left(0.644\right) \times 40 + 85 = 111°C \quad (56)$$

In typical applications, paralleling the synchronous rectifier MOSFET with a Schottky rectifier increases the overall converter efficiency by approximately 2% due to the lower power dissipation during the body diode conduction and reverse recovery periods.

6. Calculate the Inductor Value

The inductor value is calculated from Equation 12.

$$L = \frac{\left(55 - 3.3\right) \times 3.3}{55 \times 2 \times 130\ kHZ} = 11.9\ \mu H \quad (57)$$

A standard inductor value of 10-µH is chosen. A Coev DXM1306-10RO or Panasonic ETQPF102HFA could be used.

7. Setting the switching frequency

The clock frequency is set with a resistor (R_T) from the RT pin to ground. The value of R_T can be derived from following Equation 58, with f_{SW} in kHz.

$$R_T = \left(\frac{1}{f_{SW} \times 17.82\ E - 06} - 23\right) k\Omega = 408\ k\Omega, \quad \text{use } 412\ k\Omega \quad (58)$$

8. Programming the Ramp Generator Circuit

The PWM ramp is programmed through a resistor (R_{KFF}) from the KFF pin to V_{IN}. The ramp generator also controls the input UVLO voltage. For an undervoltage level of 14.4V (20% below the 18 $V_{IN(min)}$), R_{KFF} is calculated in Equation 59.

$$R_{KFF} = (80\% x V_{IN(min)} - 3.5)(65.27 \times R_T + 1502)\ \Omega = 309\ k\Omega, \text{ use } 301\ k\Omega \quad (59)$$

9. Calculating the Output Capacitance (C_O)

In this example. the output capacitance is determined by the load response requirement of ΔV = 0.3 V for a 1 A to 5 A step load. C_O can be calculated using Equation 18.

$$C_O = \frac{10\ \mu H \times (5^2 - 1^2)}{(3.3^2 - 3.0^2)} = 127\ \mu F \tag{60}$$

Using Equation 13 calculate the ESR required to meet the output ripple requirements.

$$33\ mV = 2.0\left(ESR + \frac{1}{8 \times 127\ \mu F \times 130\ kHz}\right) \tag{61}$$

ESR = 8.9 mΩ

In order to get the required ESR, the capacitance needs to be greater than the 127-µF calculated. For example, a single Panasonic SP capacitor, 180-µF with ESR of 12 mΩ can be used. Re-calculating the ESR required with the new value of 180-µF is shown in Equation 62.

$$33\ mV = 2.0\left(ESR + \frac{1}{8 \times 180\ \mu F \times 130\ kHz}\right) \tag{62}$$

ESR = 11.1 mΩ

10. Calculate the Soft-Start Capacitor (C_{SS})

This design requires a soft-start time (t_{START}) of 1 ms. C_{SS} is calculated in Equation 63.

$$C_{SS} = \frac{2.3\ \mu A}{0.7\ V} \times 1\ ms = 3.28\ nF = 3300\ pF \tag{63}$$

11. Calculate the Current Limit Resistor (R_{ILIM})

The current limit set point depends on t_{START}, V_O, C_O and I_{LOAD} at start up as shown in Equation 7.

$$I_{LIM} > \frac{180\ \mu F \times 3.3}{1\ m} + 7.0 = 7.6\ A \tag{64}$$

Set I_{LIM} for 10.0 A minimum, then from Equation 7

$$R_{ILIM} = \frac{10 \times 0.14}{I_{SINK}} + \frac{V_{OS}}{I_{SINK}}\ \Omega = \frac{10 \times 0.14}{8.3\ \mu A} + \frac{(50\ mV)}{8.3\ \mu A}\ \Omega = 175\ k\Omega = 174\ k\Omega \tag{65}$$

12. Calculate Loop Compensation Values

Calculate the DC modulator gain (A_{MOD}) from Equation 20.

$$A_{MOD} = \frac{18}{2} = 9 \tag{66}$$

$$A_{MOD(dB)} = 20 \times \log(9) = 19\ dB \tag{67}$$

Calculate the output poles and zeros from Equation 21 and Equation 22 of the L-C filter.

$$f_{LC} = \frac{1}{2\pi\sqrt{10\ \mu H \times 180\ \mu F}} = 3.7\ kHz \tag{68}$$

and

$$f_Z = \frac{1}{2\pi \times 0.012 \times 180\ \mu F} = 74\ kHz \tag{69}$$

Select the close-loop 0 dB crossover frequency, f_C. For this example f_C = 10 kHz.

Select the double zero location for the Type III compensation network at the output filter double pole at 3.7 kHz.

Select the double pole location for the Type III compensation network at the output capacitor ESR zero at 73.7 kHz.

Copyright © 2002–2013, Texas Instruments Incorporated

The amplifier gain at the crossover frequency of 10 kHz is determined by the reciprocal of the modulator gain AMOD at the crossover frequency from Equation 27.

$$A_{MOD(f)} = A_{MOD} \times \left(\frac{f_{LC}}{f_C}\right)^2 = 9 \times \left(\frac{3.7\ \text{kHz}}{10\ \text{kHz}}\right)^2 = 1.23 \tag{70}$$

And also from Equation 27.

$$G = \frac{1}{A_{MOD(f)}} = \frac{1}{1.23} = 0.81 \tag{71}$$

Choose R1 = 100 kΩ

The poles and zeros for a Type III network are described in Equation 25 and Equation 26.

$$f_{Z2} = \frac{1}{2\pi \times R1 \times C3} \therefore C3 = \frac{1}{2\pi \times 100\ \text{k}\Omega \times 3.7\ \text{kHz}} = 430\ \text{pF, choose 470 pF} \tag{72}$$

$$f_{P2} = \frac{1}{2\pi \times R3 \times C3} \therefore R3 = \frac{1}{2\pi \times 470\ \text{pF} \times 73.7\ \text{kHz}} = 4.59\ \text{k}\Omega\text{, choose 4.64 k}\Omega \tag{73}$$

$$f_C = \frac{1}{2\pi \times R1 \times C2 \times G} \therefore C2 = \frac{1}{2\pi \times 100\ \text{k}\Omega \times 0.81 \times 10\ \text{kHz}} = 196\ \text{pF, choose 220 pF} \tag{74}$$

$$f_{P1} = \frac{1}{2\pi \times R2 \times C2} \therefore R2 = \frac{1}{2\pi \times 220\ \text{pF} \times 73.7\ \text{kHz}} = 9.82\ \text{k}\Omega\text{, choose 10 k}\Omega \tag{75}$$

$$f_{Z1} = \frac{1}{2\pi \times R2 \times C1} \therefore C1 = \frac{1}{2\pi \times 10\ \text{k}\Omega \times 3.7\ \text{kHz}} = 4301\ \text{pF, choose 3900 pF} \tag{76}$$

Calculate the value of R_{BIAS} from Equation 23 with R1 = 100 kΩ.

$$R_{BIAS} = \frac{0.7\ \text{V} \times R1}{V_O - 0.7\ \text{V}} = \frac{0.7\ \text{V} \times 100\text{k}\Omega}{3.3\ \text{V} - 0.7\ \text{V}} = 26.9\ \text{k}\Omega\text{, choose 26.7 k}\Omega \tag{77}$$

CALCULATING THE BPN10 AND BP10V BYPASS CAPACITANCE

The size of the bypass capacitor depends on the total gate charge of the MOSFET being used and the amount of droop allowed on the bypass capacitor. The BPN10 capacitance, allowing for a 0.5-V droop on the BPN10 pin from Equation 8 is shown in Equation 78.

$$C_{BPN10} = \frac{Q_g}{\Delta V} = \frac{30\ \text{nC}}{0.5} = 60\ \text{nF} \tag{78}$$

and the BP10V capacitance from Equation 9 is shown in Equation 79.

$$C_{BP10V} = \frac{Q_{gSR}}{\Delta V} = \frac{57\ \text{nC}}{0.5} = 114\ \text{nF} \tag{79}$$

For this application, a 0.1-µF capacitor was used for the BPN10V and a 1.0-µF was used for the BP10V bypass capacitor. Figure 14 shows component selection for the 18-V through 55-V to 3.3-V at 5-A dc-to-dc converter specified in the design example.

GATE DRIVE CONFIGURATION

Due to the possibility of dv/dt induced turn-on from the fast MOSFET switching times, high V_{DS} voltage and low gate threshold voltage of the Si4470, the design includes a 2-Ω in the gate lead of the upper MOSFET. The resistor can be used to shape the low-to-high transition of the Switch node and reduce the tendency of dv/dt-induced turn on.

Copyright © 2002–2013, Texas Instruments Incorporated

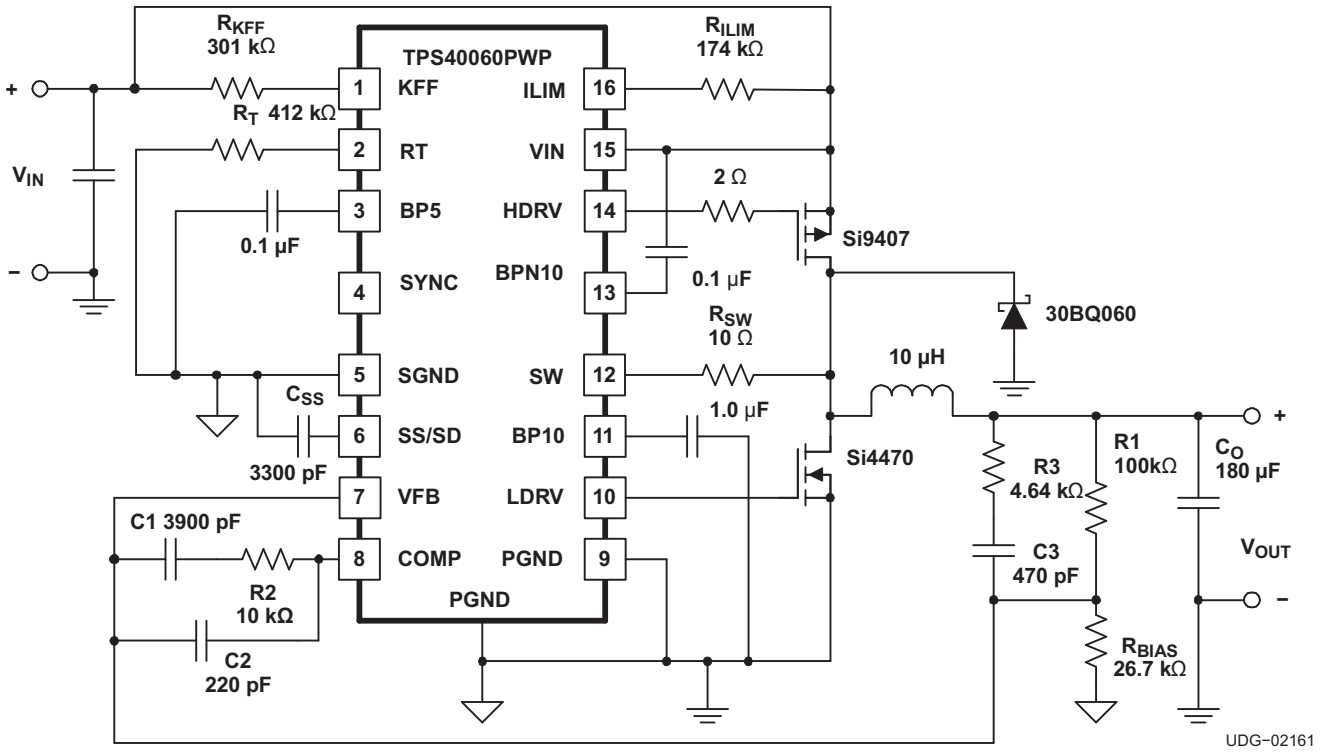

Figure 14. Design Example, 48 V to 3.3 V at 5 A dc-to-dc Converter

REFERENCES

1. Balogh, Laszlo, *Design and Application Guide for High Speed MOSFET Gate Drive Circuits*, Texas Instruments/Unitrode Corporation, Power Supply Design Seminar, SEM-1400 Topic 2.
2. *PowerPAD Thermally Enhanced Package* Texas Instruments, Semiconductor Group, Technical Brief: TI Literature No. SLMA002

Copyright © 2002–2013, Texas Instruments Incorporated

REVISION HISTORY

Changes from Revision E (June 2006) to Revision F **Page**

- Changed reference to Figure 13, PowerPad Dimensions, to Figure 14, Design Example, 48 V to 3.3 V at 5 A dc-to-dc Converter 7
- Changed both *(C_{SS} – 0.85 V)* voltages to *(V_{CSS} – 0.85 V)* in Programming Soft Start 10
- Changed *turn-on (I_L) to start-up (I_{LOAD})* in the third paragraph of Programming Current Limit section. 11
- Changed first instance of BPN10 to BP10 in respective section title. 11
- Added high-side before MOSFET in the Calculating the BP10 and BP10V Bypass Capacitor section 12
- Changed *HDRV signal goes high* to *...goes low* in the Synchronizing to an External Supply section 13
- Added equation definition for f_{SYNC} to Equation 10 13
- Deleted k from KΩ at the end of equation Equation 11 13
- Added (dummy) to R_T in Equation 11 definition 13
- Changed sequence of equation substitutions from: Equation 14 into Equation 13, Equation 16 into Equation 15, Equation 13 equal to Equation 15, to: Equation 15 into Equation 14, Equation 17 into Equation 16, Equation 14 equal to Equation 16 14
- Added generic before modulator gain in first paragraph of the Loop Compensation section 14
- Deleted *with V_{IN} being the minimum input voltage required to cause the ramp excursion to cover the entire switching period.* from first paragraph of the Loop Compensation section 14
- Deleted previous Equation 19, which was $A_{MOD} = V_{IN} / V_S$ or $A_{MOD(db)} = 20 \times \log (V_{IN} / V_S)$ 14
- Changed figure reference for modulator gain in the Loop Compensation from Figure 6 (*Typical Current Limit Protection Waveforms*) to Figure 8 (*PWM MODULATOR RELATIONSHIPS*) 14
- Added moderator DC gain and new Equation 20 to Loop Compensation section 15
- Changed V_{OUT} to $V_O$in sentence before and in Equation 23 15
- Changed calculated in to set by in sentence before Equation 24 15
- Changed V_{IN} / V_S to $V_{IN(min)} / V_{RAMP}$ in the Modulator Gain vs Switching Frequency graph 15
- Changed the TC_R minimum value from 0.0035 to 3500 and the maximum from 0.010 to 10000 in the second paragraph of the High-Side MOSFET Power Dissipation section 17
- Changed V_{DD} to V_{IN} in Equation 41 19
- Changed PowerPAD Dimensions to include x and y axis values 20
- Added high-side MOSFET to step four title 22
- Changed reference to substituting Equation 30 to Equation 47 22
- Deleted $I_{RMS}^2 \times R_{DS(ON)}$ from synchronous MOSFET conduction equation 23
- Changed synchronous MOSFET conduction equation equals value from 0.10 to 0.485 23
- Changed body diode conduction equation values: 100 ns to 50 ns and 0.104 W to 0.052 W 23
- Changed power dissipation equation values: 0.1 to 0.485, 0.104 to 0.052, 0.311 W to 0.644 W 23
- Changed junction temperature equation values: (0.311) to 0.644, 97°C to 111°C 23
- Changed Step 6 reference to Equation 11 to Equation 12 23
- Changed inductor value equation in Step 6: replaced value of 48 with 55 and 11.8 with 11.9 23
- Changed R_{KFF} equation values in Step 8:133.7 to 309 kΩ, 133 to 301 kΩ 23
- Added 80%x before $V_{IN(min)}$ in R_{KFF} equation in Step 8 23
- Changed first ESR value in Step 9 from 12.7 to 8.9 mΩ 24
- Changed second ESR value in Step 9 from 13.8 to 11.1 mΩ 24
- Changed DC modulator gain values in both equations: 10 to 18, 5 to 9; (5.0) to 9, 14 to 19 dB 24
- Changed AMOD crossover frequency equation values: 5 to 9, 0.68 to 1.23 25
- Changed gain (G) equation values: 0.68 to 1.23, 1.46 to 0.81 25
- Changed poles and zeros equation values: Equation 73, 73.3 to 73.7 kHZ, 4.62 to 4.59 kΩ; Equation 74, 3.29 to 0.81, 1.46 to 10 kHZ, 109 to 196 pF, 100 to 220 pF; Equation 75, 100 to 200 pF, 73.3 to 73.7 kHz, 21.7 to 9.82 kΩ,

Copyright © 2002–2013, Texas Instruments Incorporated

21.5 to 10 kΩ; Equation 76, 21.5 to 10 kΩ, 2000 to 4301 pF, 1800 to 3900 pF 25
- Changed Design Example graphic to include new values from equation: 133 to 301 kΩ, 1800 to 3900 pF, 21.5 to 10 kΩ, 100 to 220 pF. Si9470 to Si9407 25
- Added link references to hard-coded references throughout document 26

Copyright © 2002–2013, Texas Instruments Incorporated

PACKAGING INFORMATION

Orderable Device	Status (1)	Package Type	Package Drawing	Pins	Package Qty	Eco Plan (2)	Lead finish/ Ball material (6)	MSL Peak Temp (3)	Op Temp (°C)	Device Marking (4/5)	Samples
HPA00448PWP	ACTIVE	HTSSOP	PWP	16	90	RoHS & Green	NIPDAU	Level-2-260C-1 YEAR	-40 to 85	40060	Samples
TPS40060PWP	ACTIVE	HTSSOP	PWP	16	90	RoHS & Green	NIPDAU	Level-2-260C-1 YEAR	-40 to 85	40060	Samples
TPS40060PWPG4	ACTIVE	HTSSOP	PWP	16	90	RoHS & Green	NIPDAU	Level-2-260C-1 YEAR	-40 to 85	40060	Samples
TPS40060PWPR	ACTIVE	HTSSOP	PWP	16	2000	RoHS & Green	NIPDAU	Level-2-260C-1 YEAR	-40 to 85	40060	Samples
TPS40060PWPRG4	ACTIVE	HTSSOP	PWP	16	2000	RoHS & Green	NIPDAU	Level-2-260C-1 YEAR	-40 to 85	40060	Samples
TPS40061PWP	ACTIVE	HTSSOP	PWP	16	90	RoHS & Green	NIPDAU	Level-2-260C-1 YEAR	-40 to 85	40061	Samples
TPS40061PWPG4	ACTIVE	HTSSOP	PWP	16	90	RoHS & Green	NIPDAU	Level-2-260C-1 YEAR	-40 to 85	40061	Samples
TPS40061PWPR	ACTIVE	HTSSOP	PWP	16	2000	RoHS & Green	NIPDAU	Level-2-260C-1 YEAR	-40 to 85	40061	Samples
TPS40061PWPRG4	ACTIVE	HTSSOP	PWP	16	2000	RoHS & Green	NIPDAU	Level-2-260C-1 YEAR	-40 to 85	40061	Samples

(1) The marketing status values are defined as follows:
ACTIVE: Product device recommended for new designs.
LIFEBUY: TI has announced that the device will be discontinued, and a lifetime-buy period is in effect.
NRND: Not recommended for new designs. Device is in production to support existing customers, but TI does not recommend using this part in a new design.
PREVIEW: Device has been announced but is not in production. Samples may or may not be available.
OBSOLETE: TI has discontinued the production of the device.

(2) **RoHS:** TI defines "RoHS" to mean semiconductor products that are compliant with the current EU RoHS requirements for all 10 RoHS substances, including the requirement that RoHS substance do not exceed 0.1% by weight in homogeneous materials. Where designed to be soldered at high temperatures, "RoHS" products are suitable for use in specified lead-free processes. TI may reference these types of products as "Pb-Free".
RoHS Exempt: TI defines "RoHS Exempt" to mean products that contain lead but are compliant with EU RoHS pursuant to a specific EU RoHS exemption.
Green: TI defines "Green" to mean the content of Chlorine (Cl) and Bromine (Br) based flame retardants meet JS709B low halogen requirements of <=1000ppm threshold. Antimony trioxide based flame retardants must also meet the <=1000ppm threshold requirement.

(3) MSL, Peak Temp. - The Moisture Sensitivity Level rating according to the JEDEC industry standard classifications, and peak solder temperature.

(4) There may be additional marking, which relates to the logo, the lot trace code information, or the environmental category on the device.

(5) Multiple Device Markings will be inside parentheses. Only one Device Marking contained in parentheses and separated by a "~" will appear on a device. If a line is indented then it is a continuation of the previous line and the two combined represent the entire Device Marking for that device.

(6) Lead finish/Ball material - Orderable Devices may have multiple material finish options. Finish options are separated by a vertical ruled line. Lead finish/Ball material values may wrap to two lines if the finish value exceeds the maximum column width.

Important Information and Disclaimer: The information provided on this page represents TI's knowledge and belief as of the date that it is provided. TI bases its knowledge and belief on information provided by third parties, and makes no representation or warranty as to the accuracy of such information. Efforts are underway to better integrate information from third parties. TI has taken and continues to take reasonable steps to provide representative and accurate information but may not have conducted destructive testing or chemical analysis on incoming materials and chemicals. TI and TI suppliers consider certain information to be proprietary, and thus CAS numbers and other limited information may not be available for release.

In no event shall TI's liability arising out of such information exceed the total purchase price of the TI part(s) at issue in this document sold by TI to Customer on an annual basis.

TAPE AND REEL INFORMATION

REEL DIMENSIONS

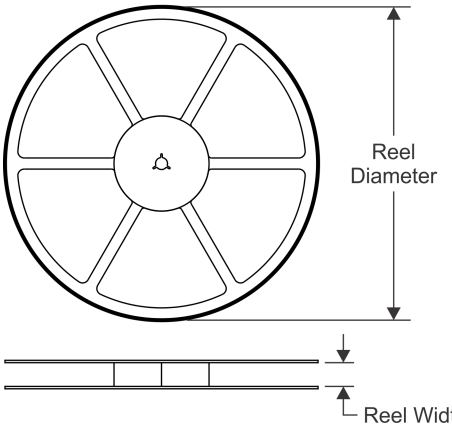

TAPE DIMENSIONS

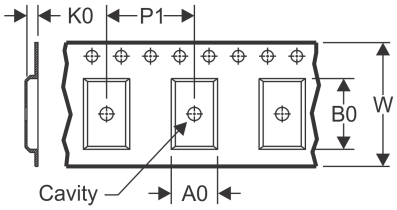

A0	Dimension designed to accommodate the component width
B0	Dimension designed to accommodate the component length
K0	Dimension designed to accommodate the component thickness
W	Overall width of the carrier tape
P1	Pitch between successive cavity centers

QUADRANT ASSIGNMENTS FOR PIN 1 ORIENTATION IN TAPE

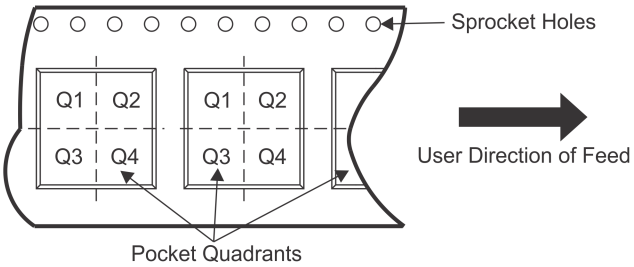

*All dimensions are nominal

Device	Package Type	Package Drawing	Pins	SPQ	Reel Diameter (mm)	Reel Width W1 (mm)	A0 (mm)	B0 (mm)	K0 (mm)	P1 (mm)	W (mm)	Pin1 Quadrant
TPS40060PWPR	HTSSOP	PWP	16	2000	330.0	12.4	6.9	5.6	1.6	8.0	12.0	Q1
TPS40061PWPR	HTSSOP	PWP	16	2000	330.0	12.4	6.9	5.6	1.6	8.0	12.0	Q1

TAPE AND REEL BOX DIMENSIONS

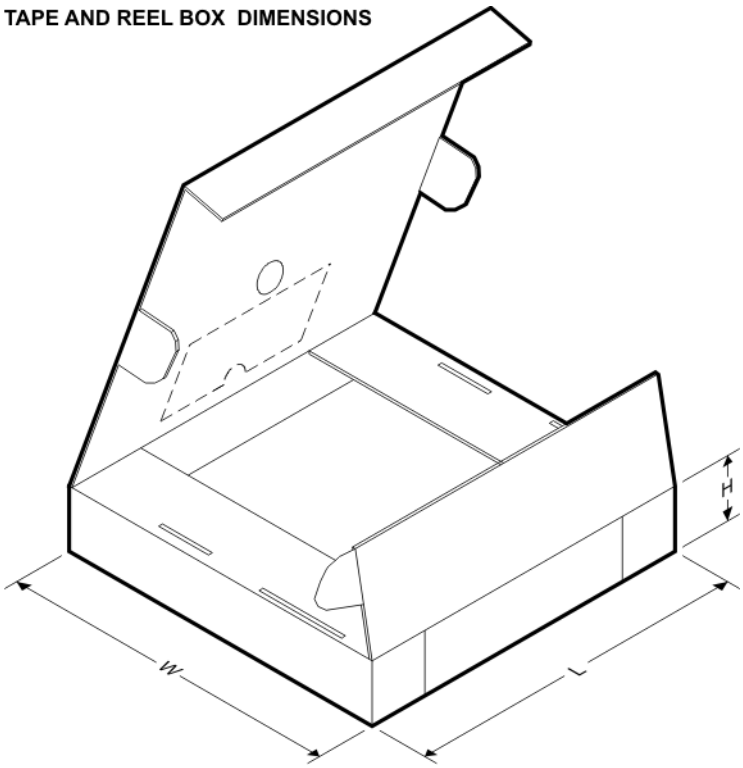

*All dimensions are nominal

Device	Package Type	Package Drawing	Pins	SPQ	Length (mm)	Width (mm)	Height (mm)
TPS40060PWPR	HTSSOP	PWP	16	2000	350.0	350.0	43.0
TPS40061PWPR	HTSSOP	PWP	16	2000	350.0	350.0	43.0

TUBE

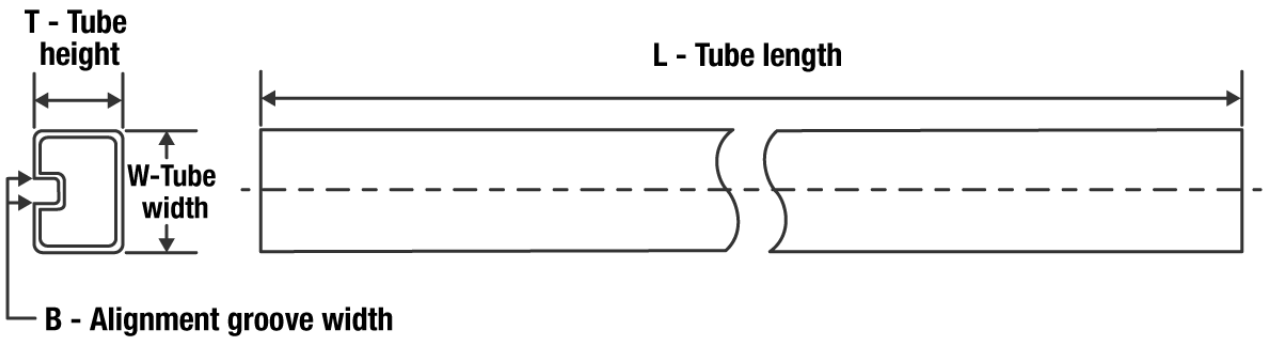

*All dimensions are nominal

Device	Package Name	Package Type	Pins	SPQ	L (mm)	W (mm)	T (µm)	B (mm)
HPA00448PWP	PWP	HTSSOP	16	90	530	10.2	3600	3.5
TPS40060PWP	PWP	HTSSOP	16	90	530	10.2	3600	3.5
TPS40060PWPG4	PWP	HTSSOP	16	90	530	10.2	3600	3.5
TPS40061PWP	PWP	HTSSOP	16	90	530	10.2	3600	3.5
TPS40061PWPG4	PWP	HTSSOP	16	90	530	10.2	3600	3.5

PWP 16 PowerPAD™ TSSOP - 1.2 mm max height

PLASTIC SMALL OUTLINE

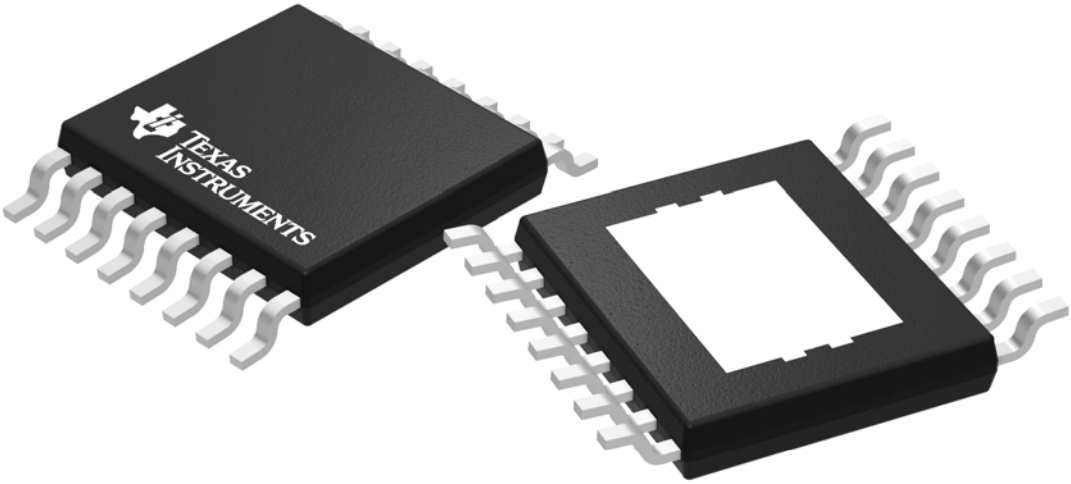

Images above are just a representation of the package family, actual package may vary.
Refer to the product data sheet for package details.

4073225-3/J

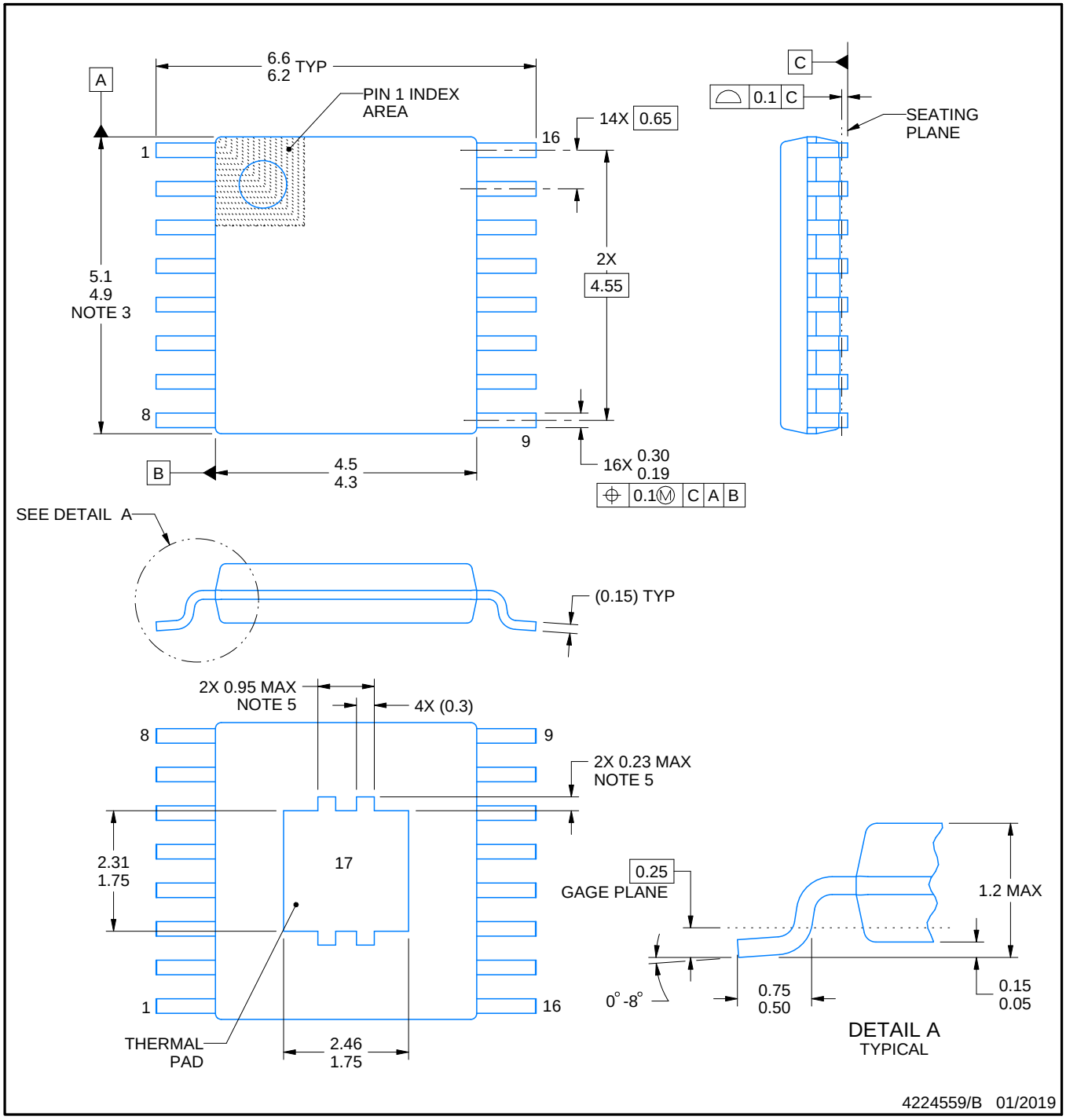

PowerPAD is a trademark of Texas Instruments.

NOTES:

1. All linear dimensions are in millimeters. Any dimensions in parenthesis are for reference only. Dimensioning and tolerancing per ASME Y14.5M.
2. This drawing is subject to change without notice.
3. This dimension does not include mold flash, protrusions, or gate burrs. Mold flash, protrusions, or gate burrs shall not exceed 0.15 mm per side.
4. Reference JEDEC registration MO-153.
5. Features may differ or may not be present.

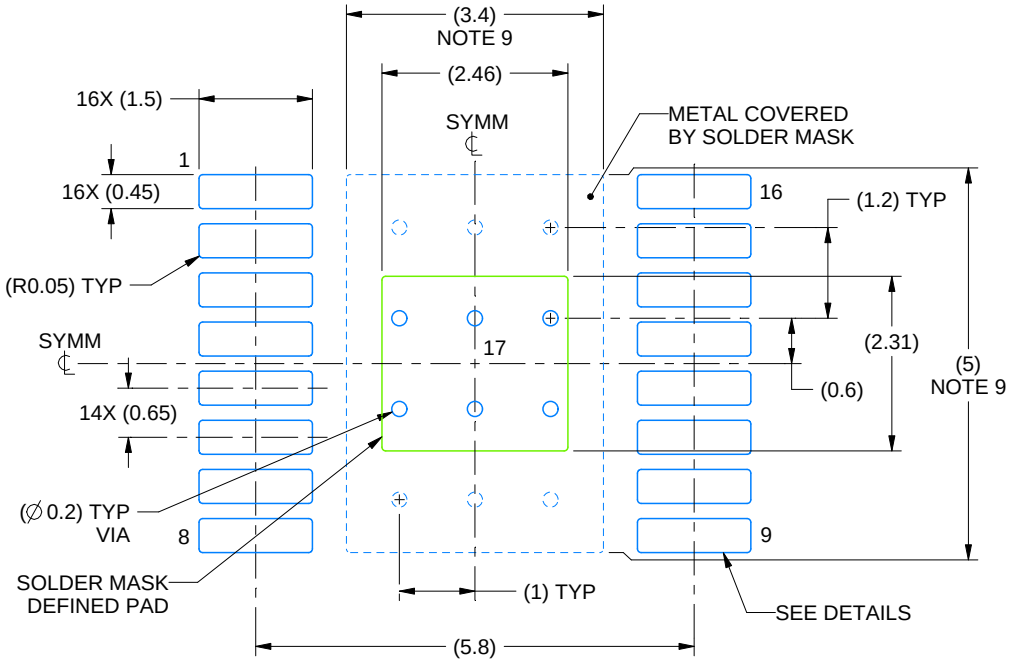

LAND PATTERN EXAMPLE
EXPOSED METAL SHOWN
SCALE: 10X

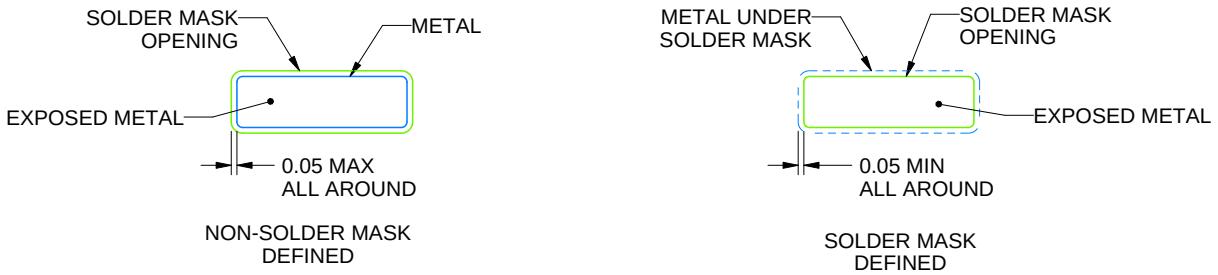

SOLDER MASK DETAILS

4224559/B 01/2019

NOTES: (continued)

6. Publication IPC-7351 may have alternate designs.
7. Solder mask tolerances between and around signal pads can vary based on board fabrication site.
8. This package is designed to be soldered to a thermal pad on the board. For more information, see Texas Instruments literature numbers SLMA002 (www.ti.com/lit/slma002) and SLMA004 (www.ti.com/lit/slma004).
9. Size of metal pad may vary due to creepage requirement.
10. Vias are optional depending on application, refer to device data sheet. It is recommended that vias under paste be filled, plugged or tented.

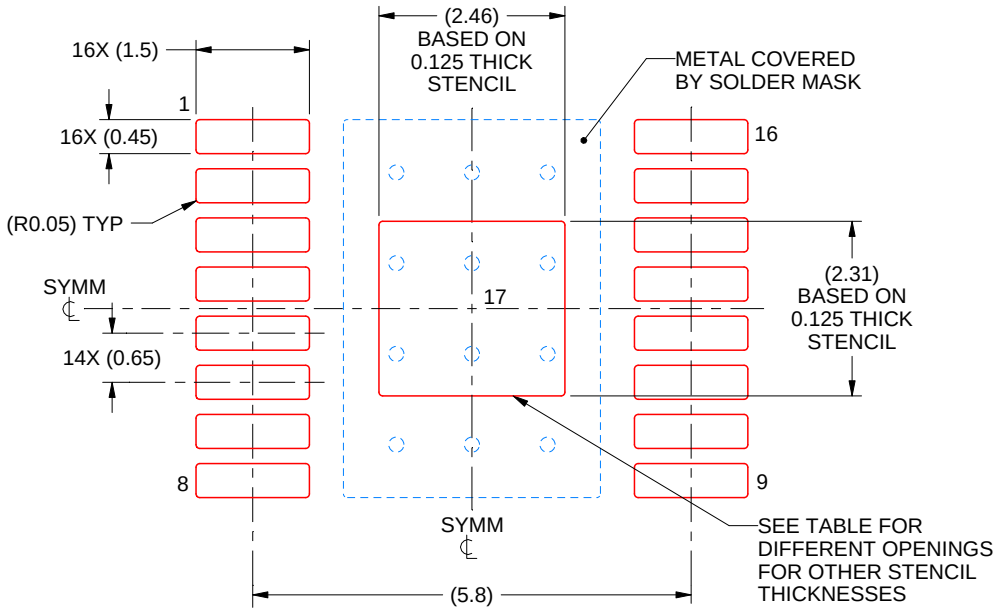

SOLDER PASTE EXAMPLE
BASED ON 0.125 mm THICK STENCIL
SCALE: 10X

STENCIL THICKNESS	SOLDER STENCIL OPENING
0.1	2.75 X 2.58
0.125	2.46 X 2.31 (SHOWN)
0.15	2.25 X 2.11
0.175	2.08 X 1.95

4224559/B 01/2019

NOTES: (continued)

11. Laser cutting apertures with trapezoidal walls and rounded corners may offer better paste release. IPC-7525 may have alternate design recommendations.
12. Board assembly site may have different recommendations for stencil design.

IMPORTANT NOTICE AND DISCLAIMER

TI PROVIDES TECHNICAL AND RELIABILITY DATA (INCLUDING DATA SHEETS), DESIGN RESOURCES (INCLUDING REFERENCE DESIGNS), APPLICATION OR OTHER DESIGN ADVICE, WEB TOOLS, SAFETY INFORMATION, AND OTHER RESOURCES “AS IS” AND WITH ALL FAULTS, AND DISCLAIMS ALL WARRANTIES, EXPRESS AND IMPLIED, INCLUDING WITHOUT LIMITATION ANY IMPLIED WARRANTIES OF MERCHANTABILITY, FITNESS FOR A PARTICULAR PURPOSE OR NON-INFRINGEMENT OF THIRD PARTY INTELLECTUAL PROPERTY RIGHTS.

These resources are intended for skilled developers designing with TI products. You are solely responsible for (1) selecting the appropriate TI products for your application, (2) designing, validating and testing your application, and (3) ensuring your application meets applicable standards, and any other safety, security, regulatory or other requirements.

These resources are subject to change without notice. TI grants you permission to use these resources only for development of an application that uses the TI products described in the resource. Other reproduction and display of these resources is prohibited. No license is granted to any other TI intellectual property right or to any third party intellectual property right. TI disclaims responsibility for, and you will fully indemnify TI and its representatives against, any claims, damages, costs, losses, and liabilities arising out of your use of these resources.

TI’s products are provided subject to TI’s Terms of Sale or other applicable terms available either on ti.com or provided in conjunction with such TI products. TI’s provision of these resources does not expand or otherwise alter TI’s applicable warranties or warranty disclaimers for TI products.

TI objects to and rejects any additional or different terms you may have proposed.

Mailing Address: Texas Instruments, Post Office Box 655303, Dallas, Texas 75265
Copyright © 2022, Texas Instruments Incorporated