Switch Mode Secondary Side Post Regulator

FEATURES

- Precision Secondary Side Post Regulation for Multiple Output Power Supplies
- Useful for Both Single Ended and Center Tapped Secondary Circuits
- Ideal Replacement for Complex Magnetic Amplifier Regulated Circuits
- Leading Edge Modulation
- Does Not Require Gate Drive Transformer
- High Frequency (>500kHz) Operation
- Applicable for Wide Range of Output Voltages
- High Current Gate Driver (0.5A Sink/1.5A Source)
- Average Current Limiting Loop

DESCRIPTION

The UCC3583 is a synchronizable secondary side post regulator for precision regulation of the auxiliary outputs of multiple output power supplies. It contains a leading edge pulse width modulator, which generates the gate drive signal for a FET power switch connected in series with the rectifying diode. The turn-on of the power switch is delayed from the leading edge of the secondary power pulse to regulate the output voltage. The UCC3583 contains a ramp generator slaved to the secondary power pulse, a voltage error amplifier, a current error amplifier, a PWM comparator and associated logic, a gate driver, a precision reference, and protection circuitry.

The ramp discharge and termination of the gate drive signal are triggered by the synchronization pulse, typically derived from the falling edge of the transformer secondary voltage. The ramp starts charging again once its low threshold is reached. The gate drive signal is turned on when the ramp voltage exceeds the control voltage. This leading edge modulation technique prevents instability when the UCC3583 is used in peak current mode primary controlled systems.

The controller operates from a floating power supply referenced to the output voltage being controlled. It features an undervoltage lockout (UVLO) circuit, a soft start circuit, and an averaging current limit amplifier. The current limit can be programmed to be proportional to the output voltage, thus achieving foldback operation to minimize the dissipation under short circuit conditions.

(continued)

TYPICAL APPLICATION AND BLOCK DIAGRAM

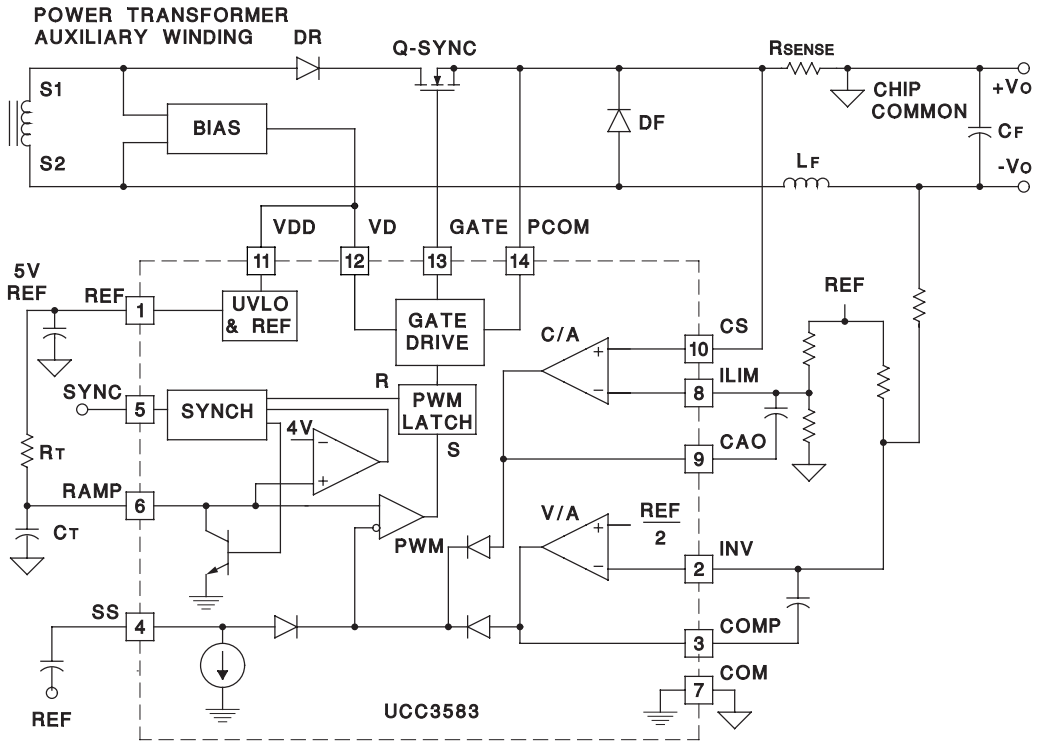

Note: Pin connections shown for 14-pin packages.

ABSOLUTE MAXIMUM RATINGS

V_{DD} 15V
I_{VDD} 15mA
RAMP . . . . . –0.3V to V_{DD} + 1V
I_{RAMP} 5mA
I_{REF} . . . . . –30mA
P_{COM} . . . . . –0.2V to 0.2V
I_{GATE} (twp < 1μS and Duty Cycle < 10%) . . . . . –0.8A to 1.8A
I_{COMP} . . . . . –5mA to 5mA
I_{CAO} . . . . . –5mA to 5mA
V_{SYNC} . . . . . –0.6V to V_{REF} +0.3V
I_{SYNC} . . . . . –05mA to 5mA
INV, SS, ILIM, ISENSE. . . . . –0.3V to VREF + 0.3V
Storage Temperature . . . . . –65°C to +150°C
Junction Temperature. . . . . –55°C to +150°C
Lead Temperature (Soldering, 10 sec.) . . . . . +300°C

All voltages are with respect to the COM terminal unless otherwise stated. Currents are positive into, negative out of the specified terminal. Consult Packaging Section of Databook for thermal limitations and considerations of packages.

THERMAL IMPEDANCE

PACKAGE	θja	θjc
N-14	90	45
J-14	90-120	28
D-14	50-120	35
PLCC-20	43-75	34

Note 1. θja (junction to ambient) is for devices mounted to 5 in2 FR4 PC board with one ounce copper where noted. When resistance range is given, lower values are for 5 in2 aluminum PC board. Test PWB was .062 in thick and typically used 0.635 mm trace widths for power pkgs and 1.3 mm trace widths for non-power pkgs with a 100x100 mil probe land area at the end of each trace

Note 2. qjc data values stated were derived from MIL-STD-1835B. MIL-STD-1835B states that “The baseline values shown are worst case (mean + 2s) for a 60x60 mil microcircuit device silicon die and applicable for devices with die sizes up to 14400 square mils. For device die sizes greater than14400 square mils use the following values; dual-in-line, 11°C/W; flat pack, 10°C/W; pin grid array, 10°C/W”.

CONNECTION DIAGRAMS

DIL-14, SOIC-14 (Top View)
J, N, or D Packages

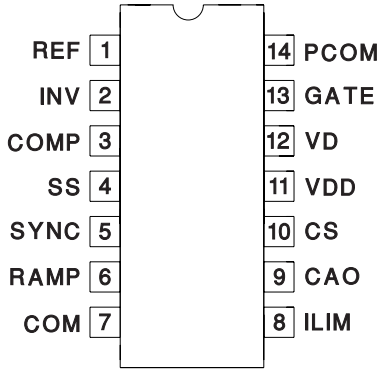

PLCC-20 (Top View)
Q Package

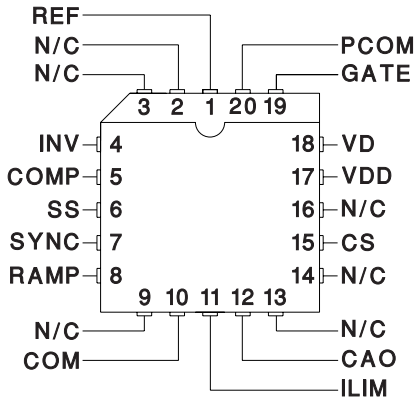

ELECTRICAL CHARACTERISTICS: Unless otherwise stated, these specifications apply for T_A = –55°C to 125°C for UCC1583, –40°C to 85°C for UCC2583, and 0°C to 70°C for UCC3583; VDD = 12V, R_T = 60k, C_T = 100pF, T_A = T_J.

PARAMETER	TEST CONDITIONS	MIN	TYP	MAX	UNITS
Ramp Generation and Synchronization					
Maximum Input Operating Frequency	For input with 5% to 90% duty cycle (Note 1)	500			kHz
Ramp Frequency, Free Running	T_A = 25°C	95	100	105	kHz
	T_A = -55°C to 125°C	90	100	110	kHz
Ramp Discharge Current	V_{RAMP} = 0.5V	2.0	3.6		mA
Low Threshold Voltage	No min, no max, 0=TYP		0		V
High Threshold Voltage		3.75	4	4.25	V
Synchronizing Threshold Voltage (On)	(Note 1)		1		V
Synchronizing Comparator Hysteresis			1		V

ELECTRICAL CHARACTERISTICS: Unless otherwise stated, these specifications apply for T_A = –55°C to 125°C for UCC1583, –40°C to 85°C for UCC2583, and 0°C to 70°C for UCC3583; VDD = 12V, R_T = 60k, C_T = 100pF, T_A = T_J.

PARAMETER	TEST CONDITIONS	MIN	TYP	MAX	UNITS
Output Duty Cycle					
Minimum Duty Cycle	Output D/C = Output PW / Input PW			0	%
Maximum Duty Cycle	Output D/C = Output PW / Input PW	100			%
Voltage Error Amplifier					
V_{INV}	V_{COMP} = V_{INV}, 0°C to 70°C (UCC3583)	2.462	2.5	2.538	V
	V_{COMP} = V_{INV}, All Other Temperature Ranges	2.45	2.5	2.55	V
I_{INV}	V_{COMP} = V_{INV}		300	500	nA
V_{COMP} Low	V_{INV} = 2.6V, I_{COMP} = 100μA		450	700	mV
V_{COMP} High	V_{INV} = 2.4V, I_{COMP} = –100μA	5.0	5.5	6.0	V
AVOL	No Load	70	90		dB
GBW Product	At f = 100kHz, T_A = 25°C (Note 1)	3	5		MHz
Current Error Amplifier					
Input Offset Voltage				10	mV
Input CM Low	Common Mode for CS and ILIM (Note 1)			0	V
Input CM High	Common Mode for CS and ILIM (Note 1)	2			V
V_{CAO} Low	V_{+IN} = 0V, V_{-IN} = 0.1V, I_{CAO} = 100μA		250	500	mV
V_{CAO} High	V_{+IN} = 0V, V_{-IN} = 0.1V, I_{CAO} = –100μA	5.0	5.5	6.0	V
Input Current (ILIM and CS Pins)		–50	0	50	nA
AVOL	No Load	70	90		dB
GBW Product	At f = 100kHz, T_A = 25°C	2	4		MHz
Soft Start Current			10	25	μA
UVLO					
VDD On Threshold Voltage		8.5	9.0	9.5	V
VDD Off Threshold Voltage		7.9	8.4	8.9	V
UVLO Hysteresis		0.3	0.6	0.9	V
Bias Supply					
Supply Clamp Voltage		13	14	15	V
Supply Current (VDD)	f = 100kHz With No Gate Output Load		3	5	mA
Output Driver					
V_{SAT} High	I_{GATE} = –150mA		0.6	1.0	V
V_{SAT} Low	I_{GATE} = 50mA		0.4	0.75	V
Rise Time	C_{GATE} = 1nF		50	75	ns
Fall Time	C_{GATE} = 330pF		20	40	ns
Reference					
V_{REF}	I_{REF} = 0, 0°C to 70°C (UCC3583)	4.925	5	5.075	V
	I_{REF} = 0, All Other Temperature Ranges	4.900	5	5.100	V
Line Regulation	VDD = 10V to 14V		2	30	mV
Load Regulation	I_{REF} = 0mA to 2mA		1	20	mV

Note 1: Ensured by design. Not 100% tested in production.

PIN DESCRIPTIONS

CAO: Output of the current error amplifier. Averaging of the sensed current signal is provided by connecting an integrating capacitor between ILIM and CAO. CAO feeds into the PWM comparator input and controls the loop when its voltage is higher than the voltage at COMP (output of the voltage error amplifier).

COM: Signal ground for the chip. It is connected to the positive terminal of the output voltage being regulated by the IC.

COMP: Output of the voltage error amplifier fed into the PWM comparator. Loop compensation components are connected between COMP and INV.

CS: Non-inverting input of the current error amplifier. The sensed current signal from the current sense resistor is connected to this pin. By making the signal at CS proportional to the output voltage, effective current foldback limiting can be provided.

GATE: Gate drive output for the power switch FET. The drive pin has a 0.5A sink/1.5A source capability and very low output off-state impedance.

ILIM: Inverting input of the current error amplifier. It sets the DC limit for the output current.

INV: Inverting input of the voltage error amplifier. The feedback signal is connected to this pin using a resistive divider between REF and $-V_O$.

PCOM: Power ground for the chip. It is connected to the source terminal of the MOSFET being regulated by the IC.

RAMP: This pin is the input to the PWM comparator and provides a ramp signal for generation of the PWM signal. A capacitor to COM and a resistor to REF set the charging rate for the ramp. An internal current source of 1mA discharges RAMP when synchronization signal appears or when RAMP crosses a 4V threshold. In the intended mode of operation, the switching frequency is determined by the secondary power pulse. The RC components at RAMP should be selected to give an appropriately sized ramp signal. In the absence of a synchronizing pulse, these RC components determine the free running frequency of the controller.

REF: Precision 5V reference pin. REF stays off until VDD exceeds 9V and turns off again when VDD drops below 8.4V. Bypass REF to COM.

SS: This pin provides a soft start function. A capacitor to REF programs the soft start time. During soft start, the PWM comparator is controlled by the soft start voltage resulting in a slow increase in output duty cycle. Once the soft start capacitor is discharged, output control is dictated by the larger of the output at CAO or COMP.

SYNC: Synchronization input pin. It is connected to a signal representative of the secondary power pulse. One possible implementation is to use a resistive divider between terminal S2 of the secondary winding shown in Figure 1 and REF for generating the input to the SYNC pin. The synchronizing comparator is referenced to 0.5V and has ±500mV of hysteresis. The trip levels are approximate 1.0V and 0.0V. The designer should prevent the SYNC pin from exceeding 0.3V below ground as this will turn on the ESD diode.

VD: Power supply for the output driver. VD should be tied to VDD in the application.

VDD: Power supply for the chip. VDD should be bypassed to COM. VDD has to be 9V for the IC to start and 8.4V for it to remain operational. A shunt clamp from VDD to COM limits the supply voltage to 14V.

APPLICATION INFORMATION

Power Stage Circuit Configuration

The UCC3583 is designed for use in a post regulator application for tightly regulating auxiliary outputs in a multiple output converter. The post regulation is applied to the secondary side power pulse of a power transformer where the power pulse is controlled by the feedback signal from the main output. In order to simplify the application of the UCC3583, it is required that the IC be referenced to the positive output terminal and the output filter inductor be placed in the return path. The placement of the inductor in the return path facilitates better EMI performance, in addition to making magnetic designs and terminations easier to implement. Typical set-up and circuit waveforms of the UCC3583 system application are shown in Figure 1. Figure 2 shows waveforms for a single ended output rectifier application of the UCC3583 shown on page 1. The UCC3583 can also be used in half bridge rectifier applications as shown by the circuit and waveforms depicted in Figures 3 and 4. Referencing the IC to the positive output terminal creates a requirement for a floating bias voltage for the IC which can be referenced to the same positive voltage terminal. Possible implementations of deriving the floating bias voltage are shown in Figure 5.

APPLICATION INFORMATION (cont.)

For the circuit shown in Figure 5a, CC1 is charged when the transformer voltage is positive and the synchronous switch is on. During the off period of Q-SYNC, the charge is transferred to CC2 through diode DC2. Diode DC3 charges CC2 during the blocking interval of Q-SYNC. This method is preferable when the transformer positive voltage is high enough to generate the required bias voltage. For the circuit shown in Figure 5b, CC1 is charged during the period when reverse (reset) voltage appears across the secondary. The charge on CC1 is transferred to CC2 through DC2 when Q-SYNC turns on. This method is preferable when the reverse voltage is high enough to generate the required bias voltage. The series resistor should be chosen to handle the required voltage drop at full IC operating current when the zener clamp across VDD and COM is activated.

The following is a description of the major functional blocks of the UCC3583. Refer to Figure 6 (Typical Application Circuit) for component designations.

UVLO and Start Up

The UCC3583 has an internal undervoltage lockout circuit which keeps the internal circuitry inactive until VDD exceeds the upper threshold (9V). Once the chip is activated, VDD has to be above the lower UVLO threshold (8.4V) for it to remain functional. The IC requires a low startup current of only 100μA when VDD is under the UVLO threshold. VDD has an internal clamp of 14V which can sink up to 10mA. Measures must be taken not to exceed this current. The internal reference (REF) is brought up when the UVLO on threshold is exceeded.

The soft start pin provides an effective means to start the IC in a controlled manner. An internal current of 10μA starts discharging a capacitor connected to SS when the UVLO conditions have been removed. The voltage on SS controls the duty cycle of the output during the discharge period.

Synchronizing Circuit and Oscillator

UCC3583 is primarily intended for synchronizable operation where its switching frequency is determined by the secondary pulse of the power transformer. However, it has an internal oscillator which allows it to operate in free-running mode when an external synchronization pulse is not available. The switching frequency is determined by resistor R_T connected between REF and RAMP and capacitor C_T connected from RAMP to GND. The frequency is given by:

$$freq = \frac{1}{t_{CH} + t_{DIS}} \quad where \quad t_{CH} = 1.56 \bullet R_T \bullet C_T$$

and

$$t_{DIS} = \frac{C_T \bullet V_{RAMP(p-p)}}{I_{RAMP(dis)}} \approx 3000 \bullet C_T$$

The values of R_T and C_T are also dictated by the fact that the ramp is discharged through an internal impedance of 2k. The value of R_T needs to be at least 50k to ensure that the internal discharge current is the current through R_T during the entire discharge period. This results in making the value of C_T relatively small for a desired frequency of operation.

When the synchronizing signal is available, the oscillator frequency should be programmed to be lower than the synchronizing frequency to ensure proper operation. A large difference in self-running and synchronizing frequencies leads to smaller ramp amplitude and higher noise sensitivity. The ramp capacitor is discharged when the synchronization signal arrives and begins charging when the low threshold is crossed.

There are two methods to synchronize to the secondary pulse. One method is to use the rising edge of the secondary pulse, which reduces the maximum duty cycle available. Subsequently, the post regulator switch cannot be turned on during the C_T discharge time. The other method is to use the falling edge of the secondary pulse for synchronization. This method is preferable because it allows a slower discharge of the ramp capacitor without affecting the maximum available duty cycle of the post regulator. The UCC3583 SYNC input needs to reach a fixed threshold (1.0V typical) for synchronization to take effect. Hence the IC is usable with either method of synchronization. However, the UCC3583 oscillator configuration is better suited for synchronization to the falling edge. A recommended method to implement the synchronization is shown in Figure 6. By connecting SYNC to a resistive divider between REF and the secondary terminal S2, the synchronization is achieved whenever the voltage on S2 goes from a negative value to zero. R_A and R_B should be selected so that the voltage on the SYNC pin varies from 0V to 1V. Placement of a Schottky diode from SYNC to COM prevents the voltage at SYNC from going negative. The internal hysteretic SYNC comparator has an inverting input set to 0.5V with about ±0.5V hysteresis.

PWM Comparator

The UCC3583 uses a leading edge PWM scheme. In a leading edge PWM, the output pulse (gate signal) is turned on when the error amplifier crosses the PWM ramp and turned off by the clock/oscillator. Leading edge modulation is naturally provided by magamp type post regulators and is an essential feature for post regulators. Without the leading edge modulation in a multiple output

APPLICATION INFORMATION (cont.)

converter with post regulation on one or more outputs, the primary current shape does not remain monotonic and can lead to instability when the primary current is used for current mode control or current limiting. When compared to conventional trailing edge PWMs, the leading edge modulation leads to a phase inversion that needs to be accounted for in the feedback loop. For the UCC3583, this inversion is automatically provided since the sensed voltage at the power supply output negative terminal has a negative polarity with respect to the chip common. Thus, UCC3583 does not require inverting buffers which would otherwise be needed.

Error Signal Generation and Current Limiting

The PWM comparator in the UCC3583 is controlled by three parallel loops with only one of them in effect at a time. During normal operation, the voltage error amplifier output is fed to the PWM comparator. The voltage error amplifier can be compensated using commonly used feedback techniques to achieve the desired dynamic performance. The ouput drive capability of the voltage amplifier is limited to 100μA, so appropriately high impedances should be used to utilize the full output swing of the amplifier. During startup, the soft start capacitor controls the pulse width. The third control loop is provided by the average current amplifier. By sensing the instantaneous inductor current and filtering/averaging it with the current error amplifier, accurate current limiting is achieved. This loop is in effect only during the overcurrent mode and provides a more accurate and noise free control of the maximum output current compared to conventional peak current limiting circuits. The current limit is set by programming the voltage at ILIM based on the current sense resistor chosen. In addition, the current limit can be made proportional to the output voltage in order to limit the power dissipation under short circuit conditions. This is implemented by inserting a bias voltage on CS which is proportional to the output voltage.

Gate Drive Circuit

The gate drive circuit of the UCC3583 provides high current drive capability and is very easy to implement as a result of tying the chip common to the source of the switching device. Turn on current is higher (1.5A) as fast turn on is essential for low losses and effective operation. During the turn off, the drain voltage disappears, so turn off time can be slower without increasing switching losses.

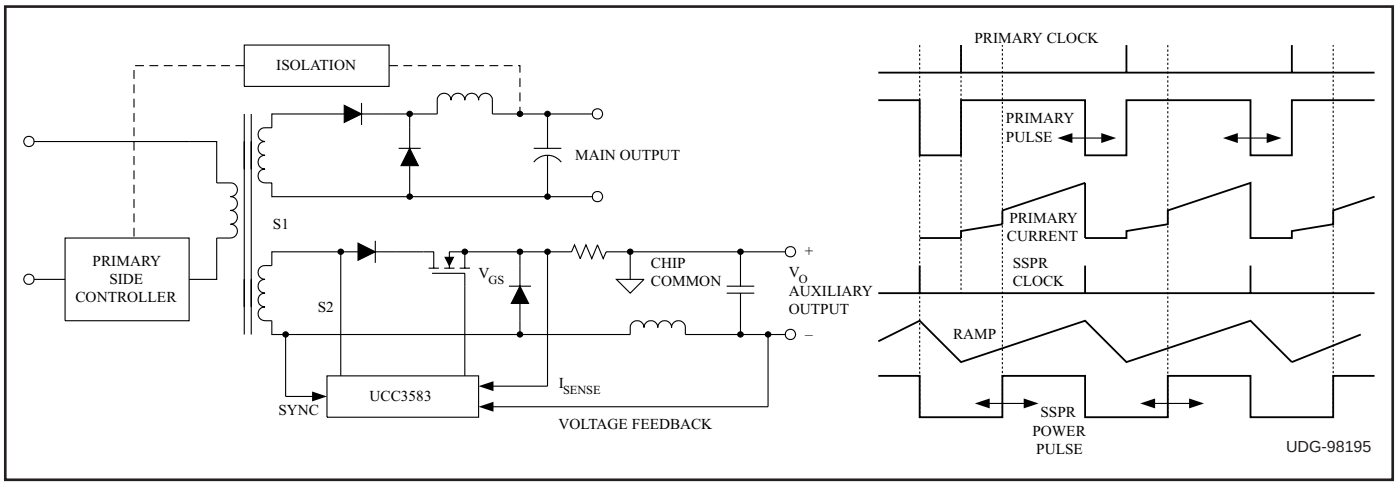

Figure 1. UCC3583 SSPR system application and typical waveforms.

APPLICATION INFORMATION (cont.)

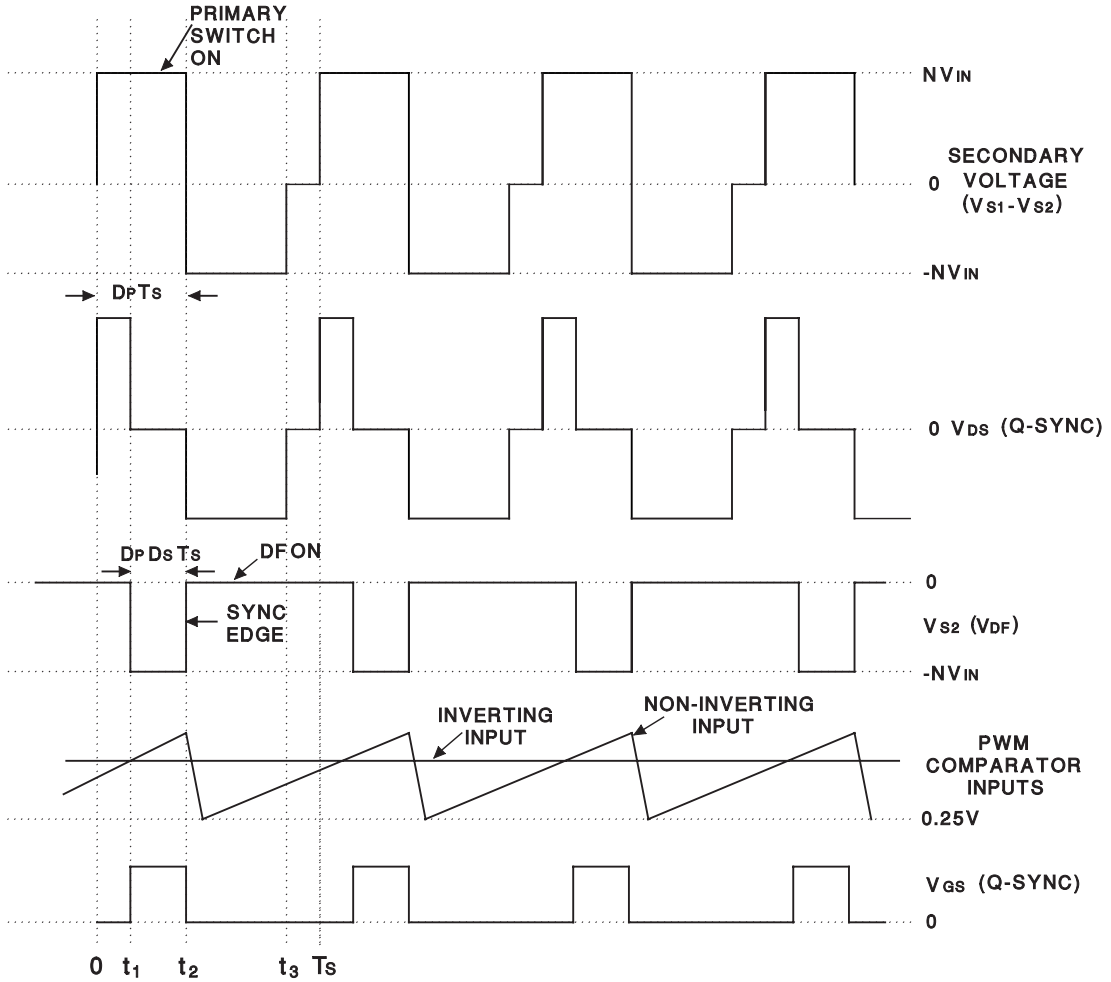

Note: All waveforms are referenced to chip common.

UDG-96141-1

Figure 2. Single ended post regulator waveforms.

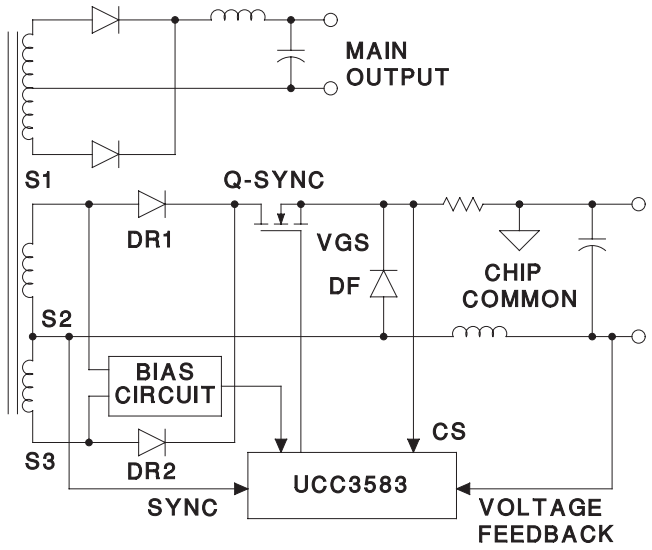

UDG-96142-1

Figure 3. Half-bridge synchronous post regulator application.

APPLICATION INFORMATION (cont.)

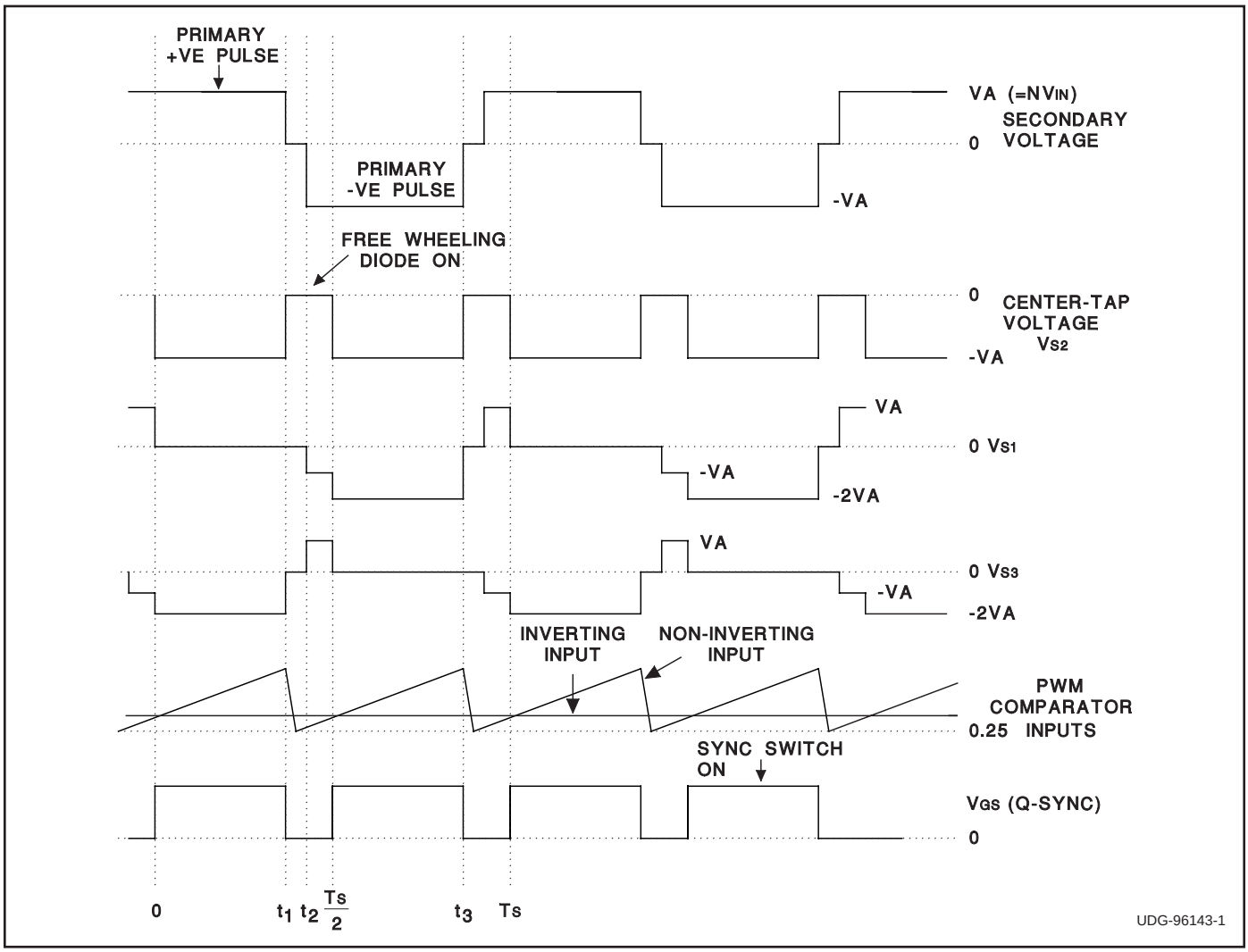

Figure 4. Half-bridge synchronous post regulator to waveforms.

APPLICATION INFORMATION (cont.)

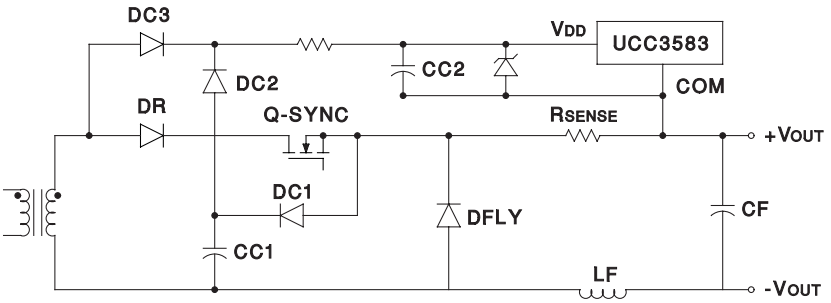

Figure 5a

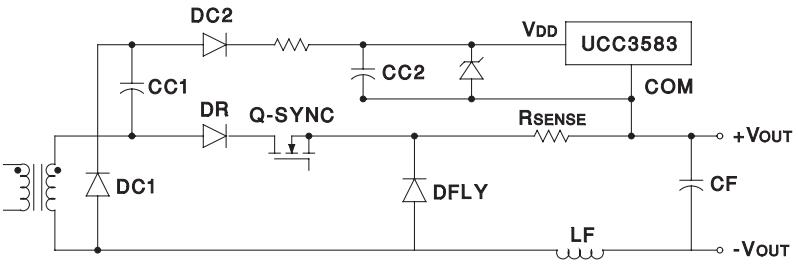

Figure 5b

UDG-96175-1

Figure 5. Possible implementation for floating bias voltage generation.

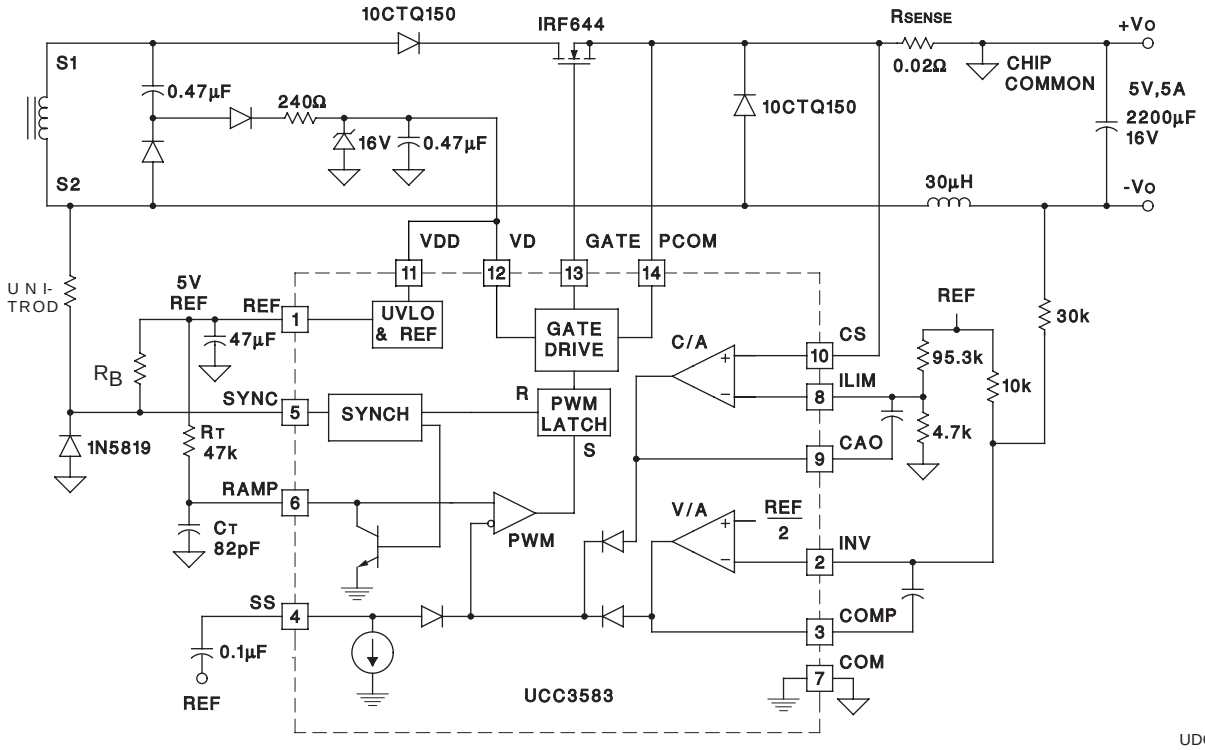

Figure 6. Typical application circuit.

PACKAGING INFORMATION

Orderable Device	Status (1)	Package Type	Package Drawing	Pins	Package Qty	Eco Plan (2)	Lead finish/ Ball material (6)	MSL Peak Temp (3)	Op Temp (°C)	Device Marking (4/5)	Samples
UCC2583D	ACTIVE	SOIC	D	14	50	RoHS & Green	NIPDAU	Level-2-260C-1 YEAR	-40 to 85	UCC2583D	Samples
UCC2583DTR	ACTIVE	SOIC	D	14	2500	RoHS & Green	NIPDAU	Level-2-260C-1 YEAR	-40 to 85	UCC2583D	Samples
UCC2583QTR	ACTIVE	PLCC	FN	20	1000	RoHS & Green	SN	Level-2-260C-1 YEAR	-40 to 85	UCC2583Q	Samples
UCC3583D	ACTIVE	SOIC	D	14	50	RoHS & Green	NIPDAU	Level-2-260C-1 YEAR	0 to 70	UCC3583D	Samples
UCC3583DTR	ACTIVE	SOIC	D	14	2500	RoHS & Green	NIPDAU	Level-2-260C-1 YEAR	0 to 70	UCC3583D	Samples

(1) The marketing status values are defined as follows:
ACTIVE: Product device recommended for new designs.
LIFEBUY: TI has announced that the device will be discontinued, and a lifetime-buy period is in effect.
NRND: Not recommended for new designs. Device is in production to support existing customers, but TI does not recommend using this part in a new design.
PREVIEW: Device has been announced but is not in production. Samples may or may not be available.
OBSOLETE: TI has discontinued the production of the device.

(2) **RoHS:** TI defines "RoHS" to mean semiconductor products that are compliant with the current EU RoHS requirements for all 10 RoHS substances, including the requirement that RoHS substance do not exceed 0.1% by weight in homogeneous materials. Where designed to be soldered at high temperatures, "RoHS" products are suitable for use in specified lead-free processes. TI may reference these types of products as "Pb-Free".
RoHS Exempt: TI defines "RoHS Exempt" to mean products that contain lead but are compliant with EU RoHS pursuant to a specific EU RoHS exemption.
Green: TI defines "Green" to mean the content of Chlorine (Cl) and Bromine (Br) based flame retardants meet JS709B low halogen requirements of <=1000ppm threshold. Antimony trioxide based flame retardants must also meet the <=1000ppm threshold requirement.

(3) MSL, Peak Temp. - The Moisture Sensitivity Level rating according to the JEDEC industry standard classifications, and peak solder temperature.

(4) There may be additional marking, which relates to the logo, the lot trace code information, or the environmental category on the device.

(5) Multiple Device Markings will be inside parentheses. Only one Device Marking contained in parentheses and separated by a "~" will appear on a device. If a line is indented then it is a continuation of the previous line and the two combined represent the entire Device Marking for that device.

(6) Lead finish/Ball material - Orderable Devices may have multiple material finish options. Finish options are separated by a vertical ruled line. Lead finish/Ball material values may wrap to two lines if the finish value exceeds the maximum column width.

Important Information and Disclaimer: The information provided on this page represents TI's knowledge and belief as of the date that it is provided. TI bases its knowledge and belief on information provided by third parties, and makes no representation or warranty as to the accuracy of such information. Efforts are underway to better integrate information from third parties. TI has taken and continues to take reasonable steps to provide representative and accurate information but may not have conducted destructive testing or chemical analysis on incoming materials and chemicals. TI and TI suppliers consider certain information to be proprietary, and thus CAS numbers and other limited information may not be available for release.

In no event shall TI's liability arising out of such information exceed the total purchase price of the TI part(s) at issue in this document sold by TI to Customer on an annual basis.

TAPE AND REEL INFORMATION

REEL DIMENSIONS

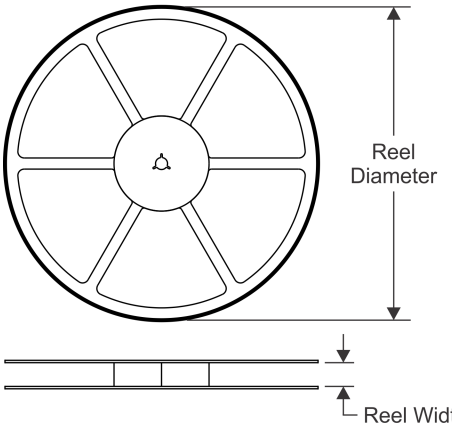

TAPE DIMENSIONS

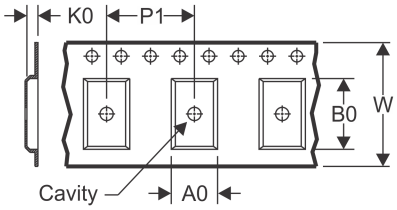

A0	Dimension designed to accommodate the component width
B0	Dimension designed to accommodate the component length
K0	Dimension designed to accommodate the component thickness
W	Overall width of the carrier tape
P1	Pitch between successive cavity centers

QUADRANT ASSIGNMENTS FOR PIN 1 ORIENTATION IN TAPE

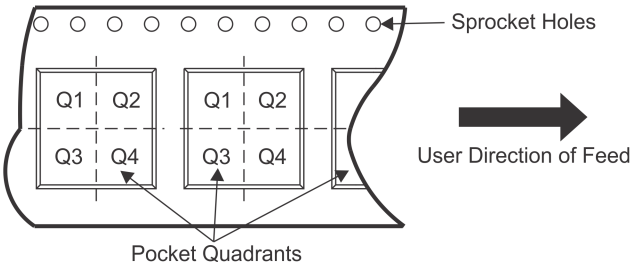

*All dimensions are nominal

Device	Package Type	Package Drawing	Pins	SPQ	Reel Diameter (mm)	Reel Width W1 (mm)	A0 (mm)	B0 (mm)	K0 (mm)	P1 (mm)	W (mm)	Pin1 Quadrant
UCC2583DTR	SOIC	D	14	2500	330.0	16.4	6.5	9.0	2.1	8.0	16.0	Q1
UCC3583DTR	SOIC	D	14	2500	330.0	16.4	6.5	9.0	2.1	8.0	16.0	Q1

TAPE AND REEL BOX DIMENSIONS

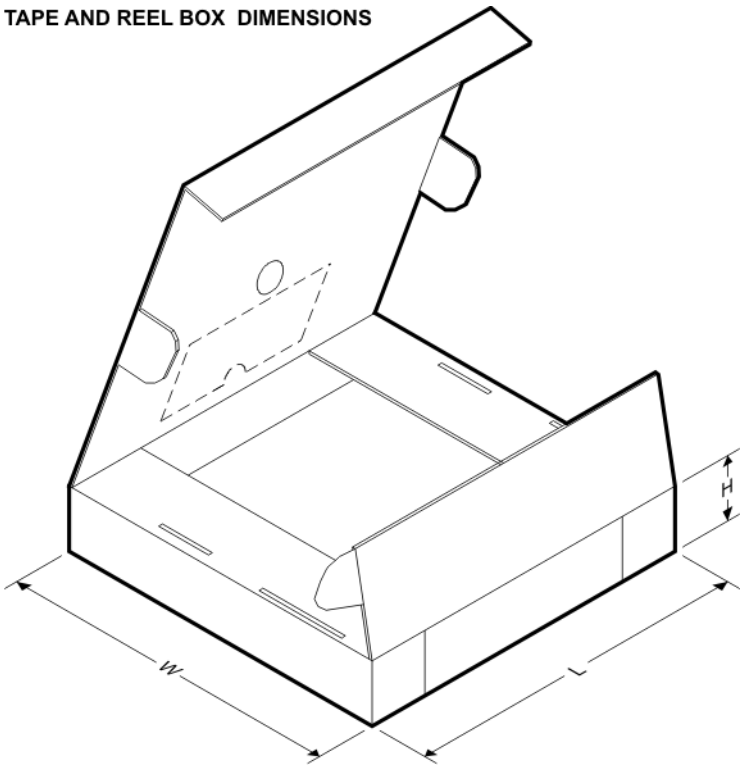

*All dimensions are nominal

Device	Package Type	Package Drawing	Pins	SPQ	Length (mm)	Width (mm)	Height (mm)
UCC2583DTR	SOIC	D	14	2500	853.0	449.0	35.0
UCC3583DTR	SOIC	D	14	2500	853.0	449.0	35.0

TUBE

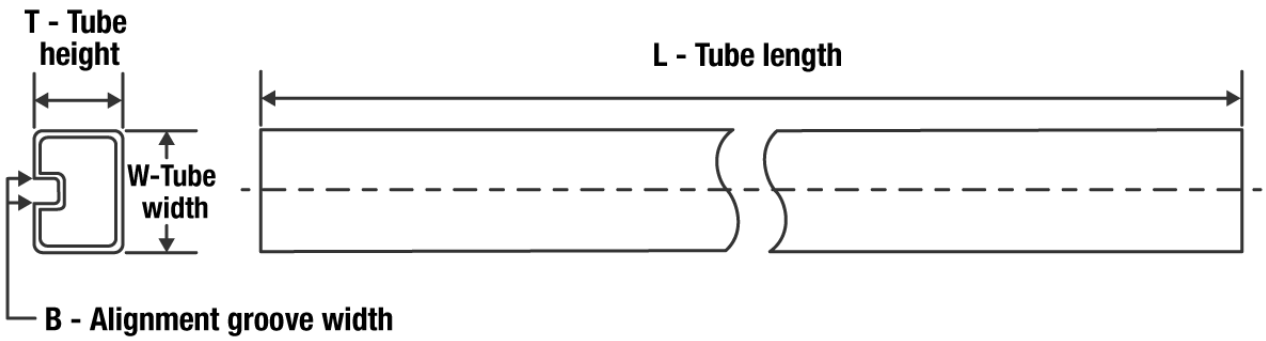

*All dimensions are nominal

Device	Package Name	Package Type	Pins	SPQ	L (mm)	W (mm)	T (µm)	B (mm)
UCC2583D	D	SOIC	14	50	506.6	8	3940	4.32
UCC3583D	D	SOIC	14	50	506.6	8	3940	4.32

FN 20

PLCC - 4.57 mm max height

PLASTIC CHIP CARRIER

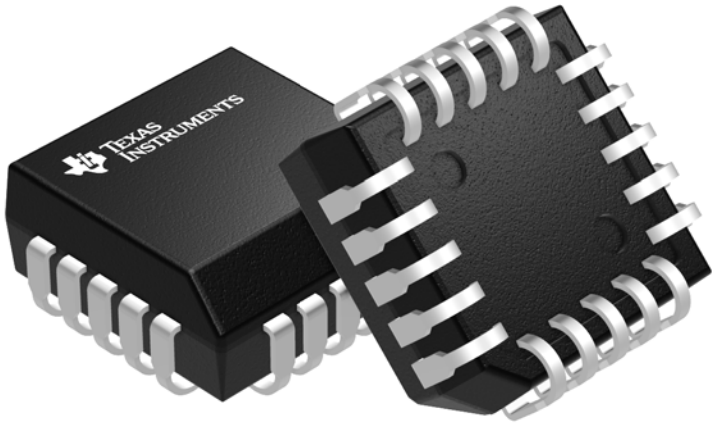

Images above are just a representation of the package family, actual package may vary.
Refer to the product data sheet for package details.

4040005-2/C

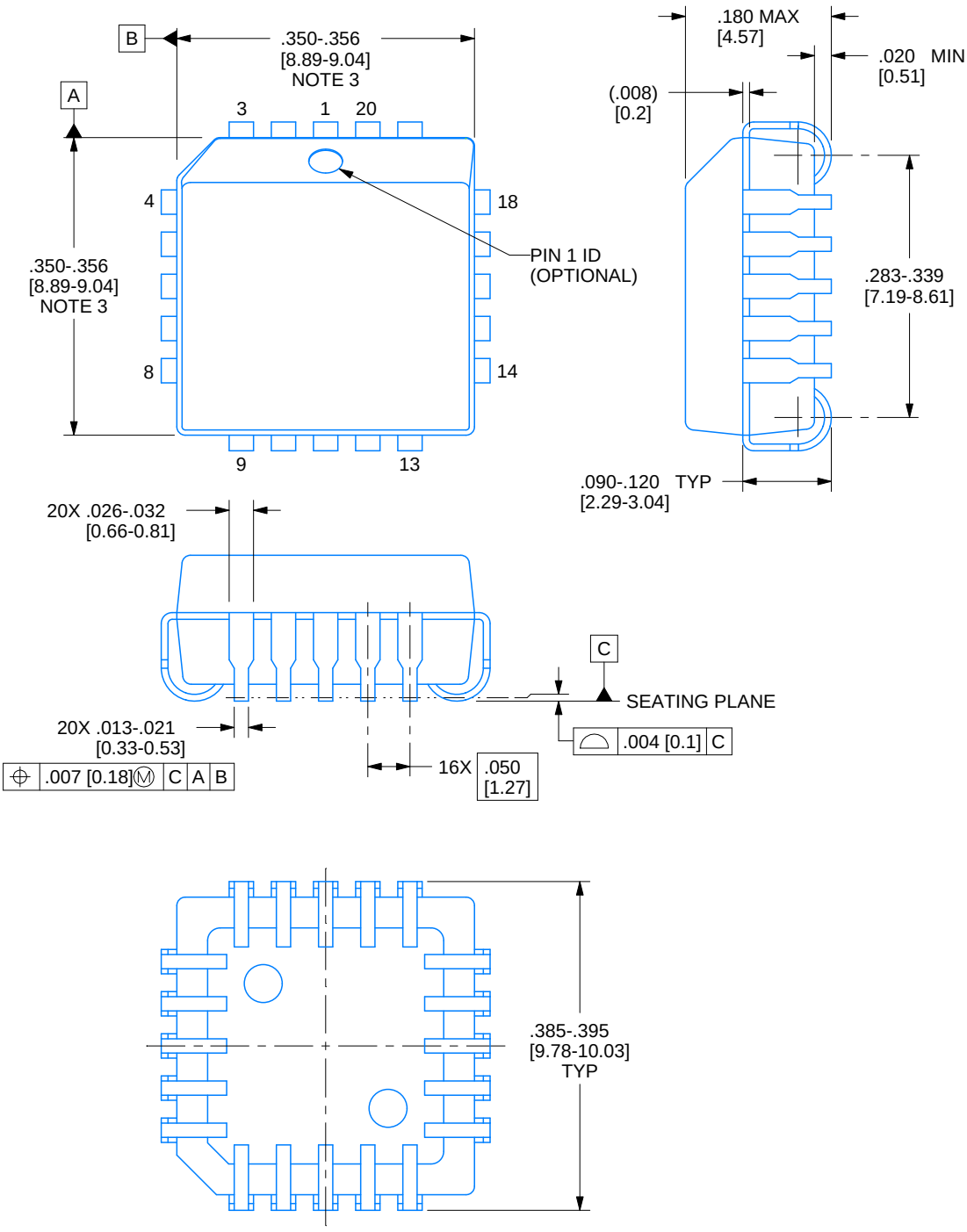

4215152/B 04/2017

NOTES:

1. All linear dimensions are in inches. Any dimensions in brackets are in millimeters. Any dimensions in parenthesis are for reference only. Controlling dimensions are in inches. Dimensioning and tolerancing per ASME Y14.5M.
2. This drawing is subject to change without notice.
3. Dimension does not include mold protrusion. Maximum allowable mold protrusion .01 in [0.25 mm] per side.
4. Reference JEDEC registration MS-018.

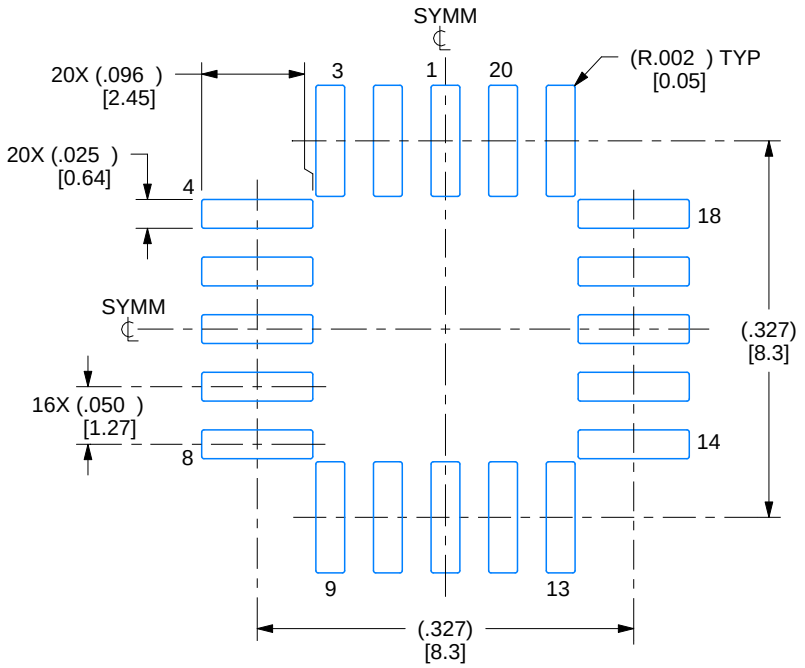

LAND PATTERN EXAMPLE
EXPOSED METAL SHOWN
SCALE:6X

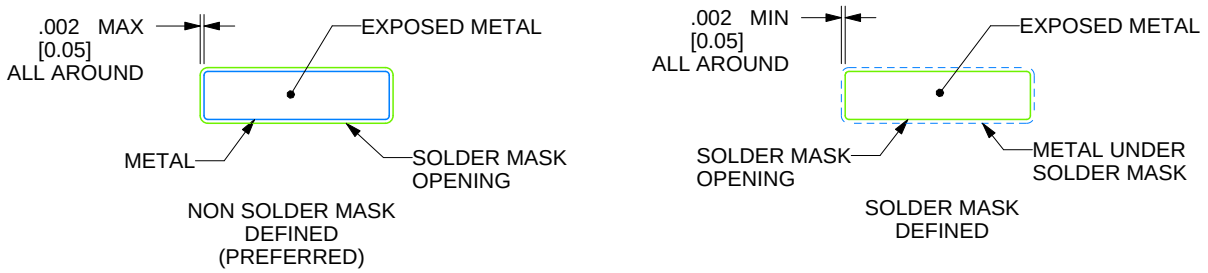

SOLDER MASK DETAILS

4215152/B 04/2017

NOTES: (continued)

5. Publication IPC-7351 may have alternate designs.
6. Solder mask tolerances between and around signal pads can vary based on board fabrication site.

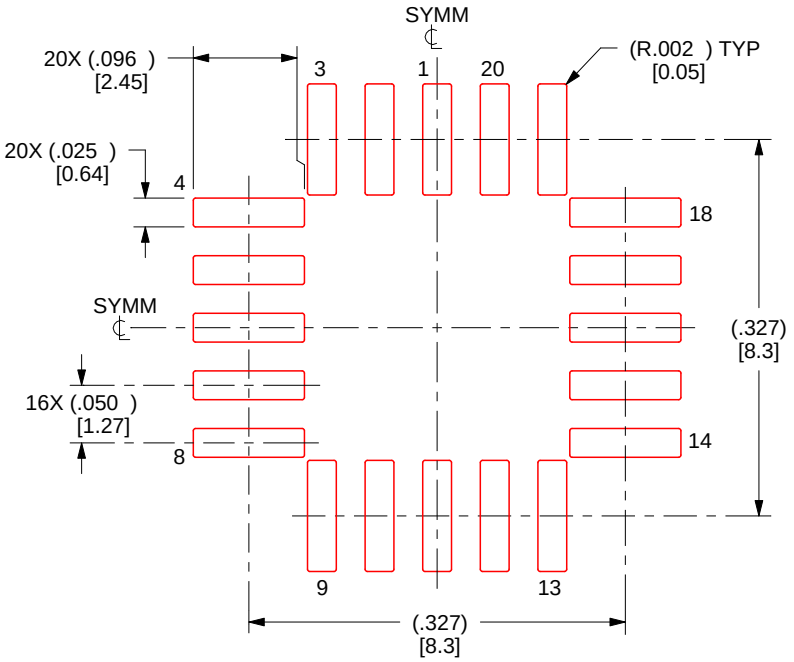

SOLDER PASTE EXAMPLE
BASED ON 0.125 mm THICK STENCIL
SCALE:6X

4215152/B 04/2017

NOTES: (continued)

7. Laser cutting apertures with trapezoidal walls and rounded corners may offer better paste release. IPC-7525 may have alternate design recommendations.
8. Board assembly site may have different recommendations for stencil design.

D (R–PDSO–G14) PLASTIC SMALL OUTLINE

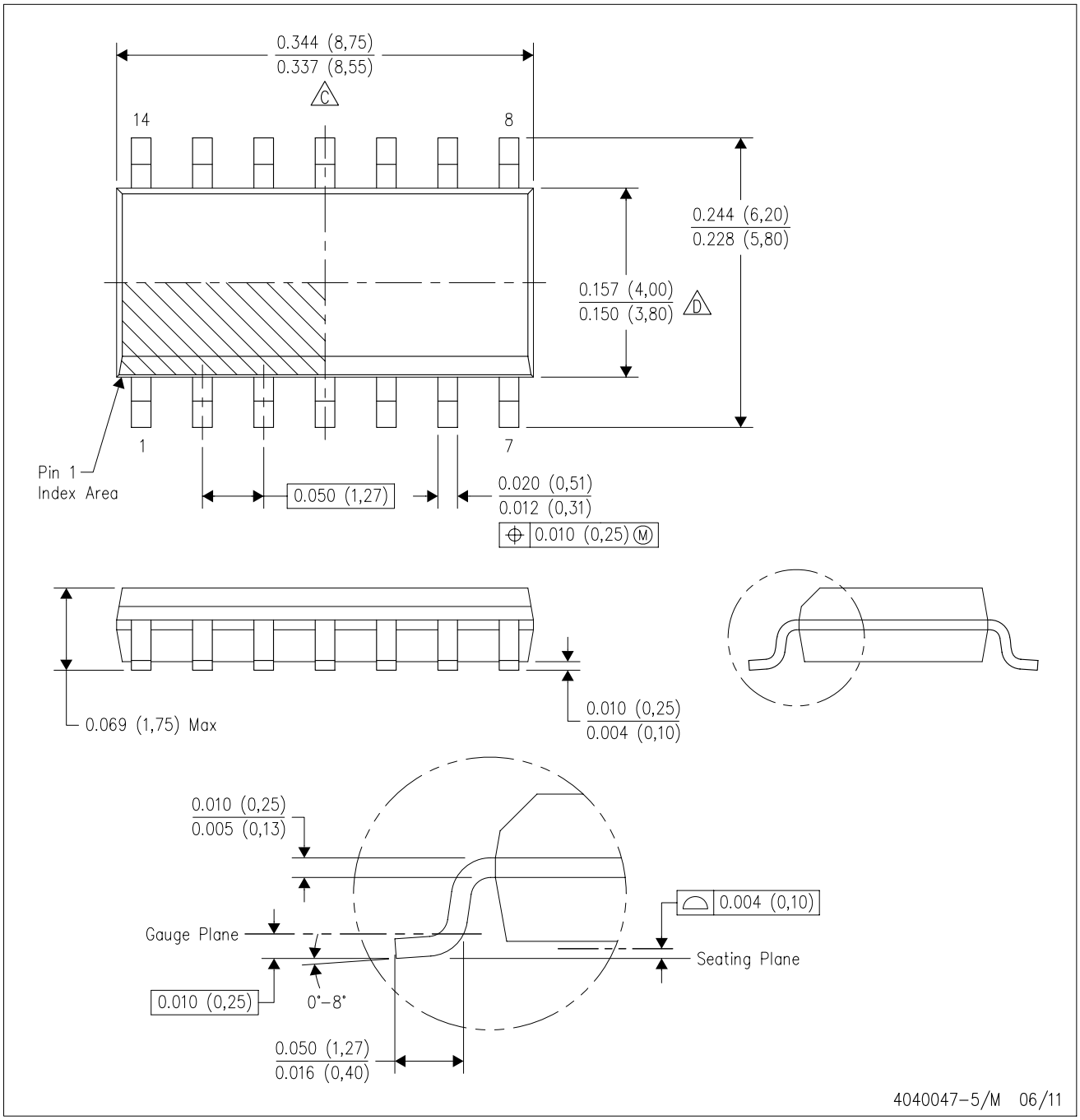

NOTES:
A. All linear dimensions are in inches (millimeters).
B. This drawing is subject to change without notice.
C. Body length does not include mold flash, protrusions, or gate burrs. Mold flash, protrusions, or gate burrs shall not exceed 0.006 (0,15) each side.
D. Body width does not include interlead flash. Interlead flash shall not exceed 0.017 (0,43) each side.
E. Reference JEDEC MS–012 variation AB.

D (R–PDSO–G14) PLASTIC SMALL OUTLINE

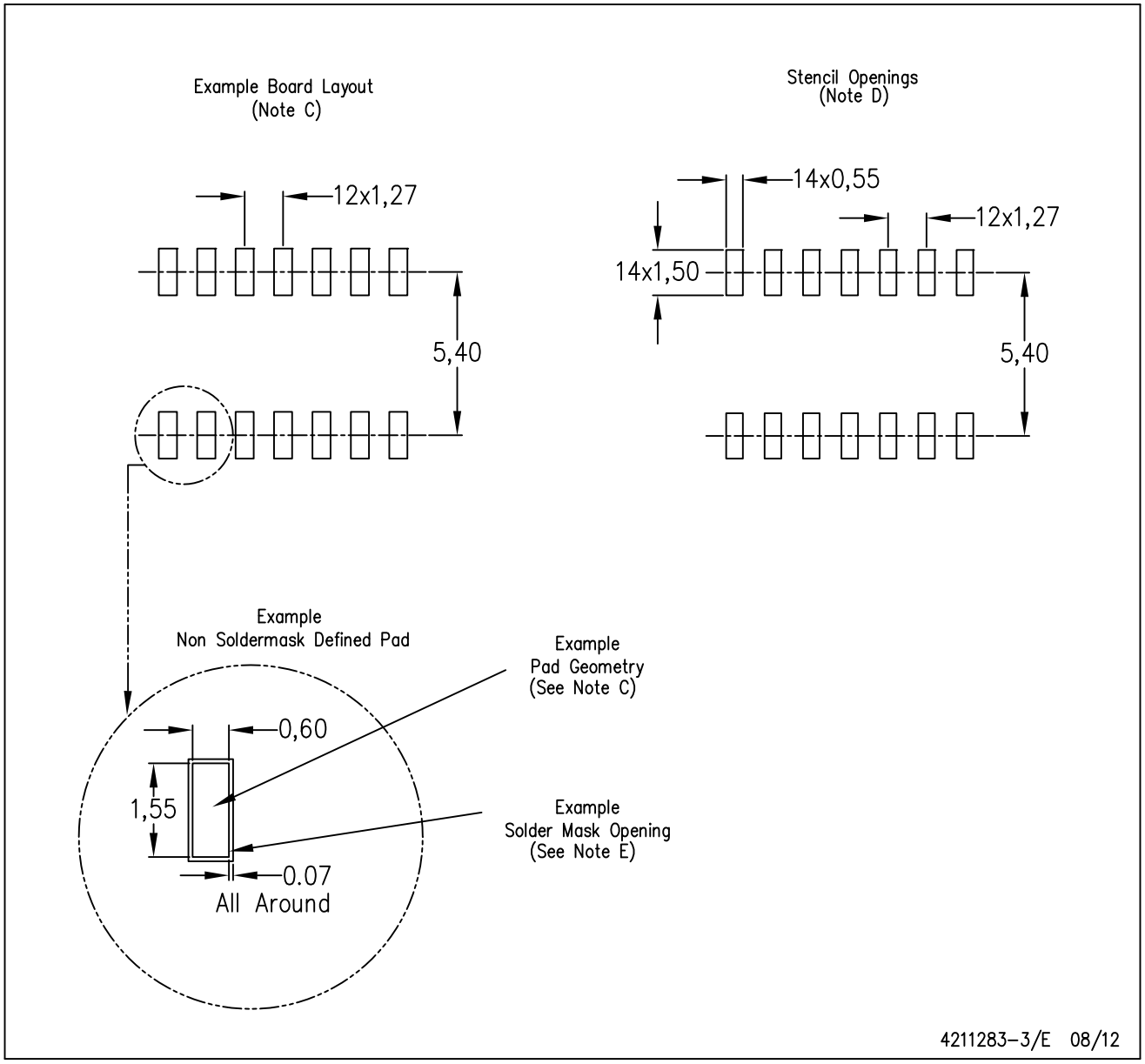

NOTES:
A. All linear dimensions are in millimeters.
B. This drawing is subject to change without notice.
C. Publication IPC–7351 is recommended for alternate designs.
D. Laser cutting apertures with trapezoidal walls and also rounding corners will offer better paste release. Customers should contact their board assembly site for stencil design recommendations. Refer to IPC–7525 for other stencil recommendations.
E. Customers should contact their board fabrication site for solder mask tolerances between and around signal pads.

IMPORTANT NOTICE AND DISCLAIMER

TI PROVIDES TECHNICAL AND RELIABILITY DATA (INCLUDING DATA SHEETS), DESIGN RESOURCES (INCLUDING REFERENCE DESIGNS), APPLICATION OR OTHER DESIGN ADVICE, WEB TOOLS, SAFETY INFORMATION, AND OTHER RESOURCES “AS IS” AND WITH ALL FAULTS, AND DISCLAIMS ALL WARRANTIES, EXPRESS AND IMPLIED, INCLUDING WITHOUT LIMITATION ANY IMPLIED WARRANTIES OF MERCHANTABILITY, FITNESS FOR A PARTICULAR PURPOSE OR NON-INFRINGEMENT OF THIRD PARTY INTELLECTUAL PROPERTY RIGHTS.

These resources are intended for skilled developers designing with TI products. You are solely responsible for (1) selecting the appropriate TI products for your application, (2) designing, validating and testing your application, and (3) ensuring your application meets applicable standards, and any other safety, security, regulatory or other requirements.

These resources are subject to change without notice. TI grants you permission to use these resources only for development of an application that uses the TI products described in the resource. Other reproduction and display of these resources is prohibited. No license is granted to any other TI intellectual property right or to any third party intellectual property right. TI disclaims responsibility for, and you will fully indemnify TI and its representatives against, any claims, damages, costs, losses, and liabilities arising out of your use of these resources.

TI’s products are provided subject to TI’s Terms of Sale or other applicable terms available either on ti.com or provided in conjunction with such TI products. TI’s provision of these resources does not expand or otherwise alter TI’s applicable warranties or warranty disclaimers for TI products.

TI objects to and rejects any additional or different terms you may have proposed.

Mailing Address: Texas Instruments, Post Office Box 655303, Dallas, Texas 75265
Copyright © 2022, Texas Instruments Incorporated