CD54HC4060, CD74HC4060, CD54HCT4060, CD74HCT4060

Data sheet acquired from Harris Semiconductor
SCHS207G

February 1998 - Revised October 2003

High-Speed CMOS Logic 14-Stage Binary Counter with Oscillator

Features

- **Onboard Oscillator**
- **Common Reset**
- **Negative-Edge Clocking**
- **Fanout (Over Temperature Range)**
  - **Standard Outputs . . . . . 10 LSTTL Loads**
  - **Bus Driver Outputs . . . . . 15 LSTTL Loads**
- **Wide Operating Temperature Range . . . -55°C to 125°C**
- **Balanced Propagation Delay and Transition Times**
- **Significant Power Reduction Compared to LSTTL Logic ICs**
- **HC Types**
  - **2V to 6V Operation**
  - **High Noise Immunity: N_{IL} = 30%, N_{IH} = 30% of V_{CC} at V_{CC} = 5V**
- **HCT Types**
  - **4.5V to 5.5V Operation**
  - **Direct LSTTL Input Logic Compatibility, V_{IL}= 0.8V (Max), V_{IH} = 2V (Min)**
  - **CMOS Input Compatibility, $I_I \leq 1\mu A$ at V_{OL}, V_{OH}**

Description

The ’HC4060 and ’HCT4060 each consist of an oscillator section and 14 ripple-carry binary counter stages. The oscillator configuration allows design of either RC or crystal oscillator circuits. A Master Reset input is provided which resets the counter to the all-0’s state and disables the oscillator. A high level on the MR line accomplishes the reset function. All counter stages are master-slave flip-flops. The state of the counter is advanced one step in binary order on the negative transition of ϕI (and ϕO). All inputs and outputs are buffered. Schmitt trigger action on the input-pulse-line permits unlimited rise and fall times.

In order to achieve a symmetrical waveform in the oscillator section the HCT4060 input pulse switch points are the same as in the HC4060; only the MR input in the HCT4060 has TTL switching levels.

Ordering Information

PART NUMBER	TEMP. RANGE (^{O}C)	PACKAGE
CD54HC4060F3A	-55 to 125	16 Ld CERDIP
CD54HCT4060F3A	-55 to 125	16 Ld CERDIP
CD74HC4060E	-55 to 125	16 Ld PDIP
CD74HC4060M	-55 to 125	16 Ld SOIC
CD74HC4060MT	-55 to 125	16 Ld SOIC
CD74HC4060M96	-55 to 125	16 Ld SOIC
CD74HC4060PW	-55 to 125	16 Ld TSSOP
CD74HC4060PWR	-55 to 125	16 Ld TSSOP
CD74HC4060PWT	-55 to 125	16 Ld TSSOP
CD74HCT4060E	-55 to 125	16 Ld PDIP
CD74HCT4060M	-55 to 125	16 Ld SOIC
CD74HCT4060MT	-55 to 125	16 Ld SOIC
CD74HCT4060M96	-55 to 125	16 Ld SOIC

NOTE: When ordering, use the entire part number. The suffixes 96 and R denote tape and reel. The suffix T denotes a small-quantity reel of 250.

Pinout

CD54HC4060, CD54HCT4060 (CERDIP)
CD74HC4060 (PDIP, SOIC, TSSOP)
CD74HCT4060 (PDIP, SOIC)
TOP VIEW

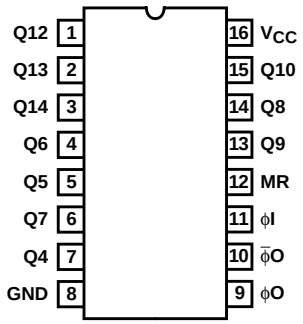

CAUTION: These devices are sensitive to electrostatic discharge. Users should follow proper IC Handling Procedures.

Copyright © 2003, Texas Instruments Incorporated

Functional Diagram

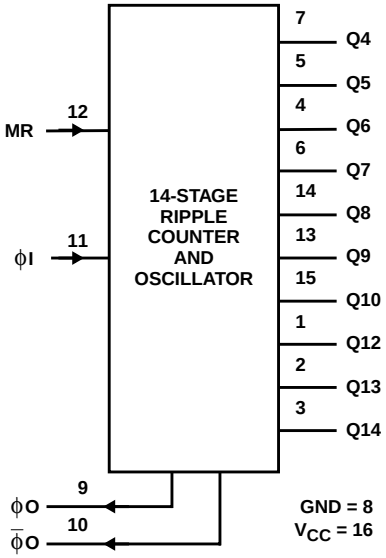

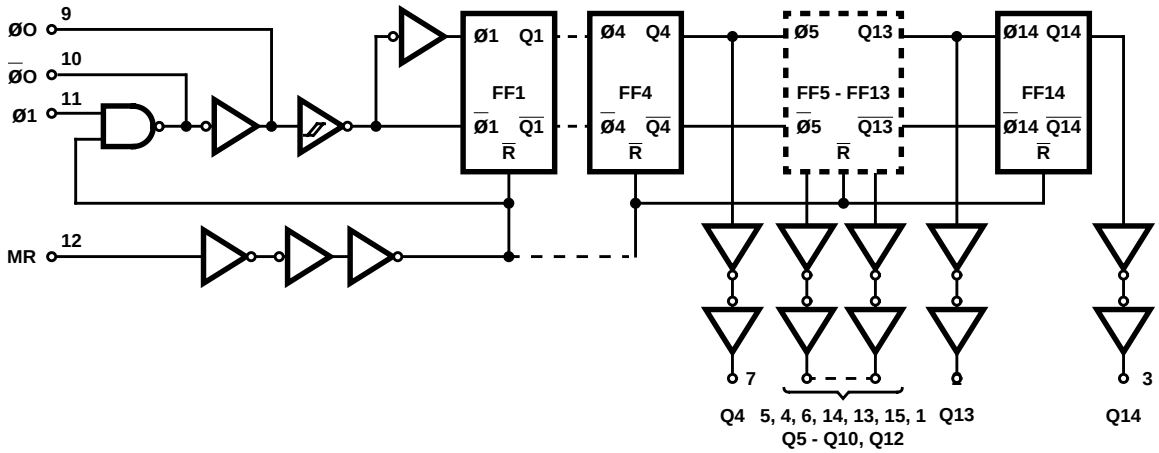

FIGURE 1. LOGIC BLOCK DIAGRAM

TRUTH TABLE

ØI	MR	OUTPUT STATE
↑	L	No Change
↓	L	Advance to Next State
X	H	All Outputs are Low

Absolute Maximum Ratings

DC Supply Voltage, V_{CC} . . . . . -0.5V to 7V
DC Input Diode Current, I_{IK}
For V_I < -0.5V or V_I > V_{CC} + 0.5V . . . . . ±20mA
DC Output Diode Current, I_{OK}
For V_O < -0.5V or V_O > V_{CC} + 0.5V . . . . . ±20mA
DC Drain Current, per Output, I_O
For -0.5V < V_O < V_{CC} + 0.5V . . . . . ±25mA
DC V_{CC} or Ground Current, I_{CC} . . . . . ±50mA

Operating Conditions

Temperature Range, T_A . . . . . -55°C to 125°C
Supply Voltage Range, V_{CC}
HC Types . . . . . 2V to 6V
HCT Types . . . . . 4.5V to 5.5V
DC Input or Output Voltage, V_I, V_O . . . . . 0V to V_{CC}
Input Rise and Fall Time
2V . . . . . 1000ns (Max)
4.5V . . . . . 500ns (Max)
6V . . . . . 400ns (Max)

Thermal Information

Thermal Resistance (Typical, Note 1)	θ_{JA} (°C/W)
E (PDIP) Package	67
M (SOIC) Package	73
PW (TSSOP) Package	108

Maximum Junction Temperature . . . . . 150°C
Maximum Storage Temperature Range . . . . . -65°C to 150°C
Maximum Lead Temperature (Soldering 10s) . . . . . 300°C
(SOIC - Lead Tips Only)

CAUTION: Stresses above those listed in "Absolute Maximum Ratings" may cause permanent damage to the device. This is a stress only rating and operation of the device at these or any other conditions above those indicated in the operational sections of this specification is not implied.

NOTE:

1. The package thermal impedance is calculated in accordance with JESD 51-7.

DC Electrical Specifications

PARAMETER	SYMBOL	TEST CONDITIONS		V_{CC} (V)	25°C			-40°C TO 85°C		-55°C TO 125°C		UNITS
		V_I (V)	I_O (mA)		MIN	TYP	MAX	MIN	MAX	MIN	MAX	
HC TYPES												
High Level Input Voltage	V_{IH}	-	-	2	1.5	-	-	1.5	-	1.5	-	V
				4.5	3.15	-	-	3.15	-	3.15	-	V
				6	4.2	-	-	4.2	-	4.2	-	V
Low Level Input Voltage	V_{IL}	-	-	2	-	-	0.5	-	0.5	-	0.5	V
				4.5	-	-	1.35	-	1.35	-	1.35	V
				6	-	-	1.8	-	1.8	-	1.8	V
High Level Output Voltage Q Outputs CMOS Loads	V_{OH}	V_{IH} or V_{IL}	-0.02	2	1.9	-	-	1.9	-	1.9	-	V
			-0.02	4.5	4.4	-	-	4.4	-	4.4	-	V
			-0.02	6	5.9	-	-	5.9	-	5.9	-	V
High Level Output Voltage Q Outputs TTL Loads			-	-	-	-	-	-	-	-	-	V
			-4	4.5	3.98	-	-	3.84	-	3.7	-	V
			-5.2	6	5.48	-	-	5.34	-	5.2	-	V
Low Level Output Voltage Q Outputs CMOS Loads	V_{OL}	V_{IH} or V_{IL}	0.02	2	-	-	0.1	-	0.1	-	0.1	V
			0.02	4.5	-	-	0.1	-	0.1	-	0.1	V
			0.02	6	-	-	0.1	-	0.1	-	0.1	V
Low Level Output Voltage Q Outputs TTL Loads			-	-	-	-	-	-	-	-	-	V
			4	4.5	-	-	0.26	-	0.33	-	0.4	V
			5.2	6	-	-	0.26	-	0.33	-	0.4	V
High-Level Output Voltage $\bar{\phi}$O Output (Pin 10) CMOS Loads	V_{OH}	V_{CC} or GND	-0.02	2	1.9	-	-	1.9	-	1.9	-	V
			-0.02	4.5	4.4	-	-	4.4	-	4.4	-	V
			-0.02	6	5.9	-	-	5.9	-	5.9	-	V

DC Electrical Specifications (Continued)

PARAMETER	SYMBOL	TEST CONDITIONS		V_{CC} (V)	25°C			-40°C TO 85°C		-55°C TO 125°C		UNITS
		V_I (V)	I_O (mA)		MIN	TYP	MAX	MIN	MAX	MIN	MAX	
High-Level Output Voltage $\bar{\phi}$O Output (Pin 10) TTL Loads (Note 2)	V_{OH}	V_{CC} or GND	-2.6	4.5	3.98	-	-	3.84	-	3.7	-	V
			-3.3	6	5.48	-	-	5.34	-	5.2	-	V
Low-Level Output Voltage $\bar{\phi}$O Output (Pin 10) CMOS Loads	V_{OL}	V_{CC} or GND	0.02	2	-	-	0.1	-	0.1	-	0.1	V
			0.02	4.5	-	-	0.1	-	0.1	-	0.1	V
			0.02	6	-	-	0.1	-	0.1	-	0.1	V
Low-Level Output Voltage $\bar{\phi}$O Output (Pin 10) TTL Loads	V_{OL}	V_{CC} or GND	2.6	4.5	-	-	0.26	-	0.33	-	0.4	V
			3.3	6	-	-	0.26	-	0.33	-	0.4	V
High-Level Output Voltage ϕO Output (Pin 9) TTL Loads	V_{OH}	V_{IL} or V_{IH}	-3.2	4.5	3.98	-	-	3.84	-	3.7	-	V
			-4.2	6	5.48	-	-	5.34	-	5.2	-	V
Low-Level Output Voltage ϕO Output (Pin 9) TTL Loads	V_{OL}	V_{IL} or V_{IH}	-2.6	4.5	-	-	0.26	-	0.33	-	0.4	V
			-3.3	6	-	-	0.26	-	0.33	-	0.4	V
Input Leakage Current	I_I	V_{CC} or GND	-	6	-	-	±0.1	-	±1	-	±1	µA
Quiescent Device Current	I_{CC}	V_{CC} or GND	0	6	-	-	8	-	80	-	160	µA
HCT TYPES												
High Level Input Voltage	V_{IH}	-	-	4.5 to 5.5	2	-	-	2	-	2	-	V
Low Level Input Voltage	V_{IL}	-	-	4.5 to 5.5	-	-	0.8	-	0.8	-	0.8	V
High Level Output Voltage Q Outputs CMOS Loads	V_{OH}	V_{IH} or V_{IL} (Note 3)	-0.02	4.5	4.4	-	-	4.4	-	4.4	-	V
High Level Output Voltage Q Outputs TTL Loads			-4	4.5	3.98	-	-	3.84	-	3.7	-	V
Low Level Output Voltage Q Outputs CMOS Loads	V_{OL}	V_{IH} or V_{IL} (Note 3)	0.02	4.5	-	-	0.1	-	0.1	-	0.1	V
Low Level Output Voltage Q Outputs TTL Loads			4	4.5	-	-	0.26	-	0.33	-	0.4	V
High-Level Output Voltage $\bar{\phi}$O Output (Pin 10) CMOS Loads	V_{OH}	V_{CC} or GND	-0.02	4.5	4.4	-	-	4.4	-	4.4	-	V
High-Level Output Voltage $\bar{\phi}$O Output (Pin 10) TTL Loads (Note 2)	V_{OH}	V_{CC} or GND	-2.6	4.5	3.98	-	-	3.84	-	3.7	-	V
Low-Level Output Voltage $\bar{\phi}$O Output (Pin 10) CMOS Loads	V_{OL}	V_{CC} or GND	0.02	4.5	-	-	0.1	-	0.1	-	0.1	V

DC Electrical Specifications (Continued)

PARAMETER	SYMBOL	TEST CONDITIONS		V_{CC} (V)	25°C			-40°C TO 85°C		-55°C TO 125°C		UNITS
		V_I (V)	I_O (mA)		MIN	TYP	MAX	MIN	MAX	MIN	MAX	
Low-Level Output Voltage $\bar{\phi}$O Output (Pin 10) TTL Loads	V_{OL}	V_{CC} or GND	2.6	4.5	-	-	0.26	-	0.33	-	0.4	V
High-Level Output Voltage ϕO Output (Pin 9) TTL Loads	V_{OH}	V_{IL} or V_{IH}	-3.2	4.5	3.98	-	-	3.84	-	3.7	-	V
Low-Level Output Voltage ϕO Output (Pin 9) TTL Loads	V_{OL}	V_{IH} or V_{IL} (Note 3)	3.2	4.5	-		0.26	-	0.33	-	0.4	V
Input Leakage Current	I_I	Any Voltage Between V_{CC} and GND	-	5.5	-		±0.1	-	±1	-	±1	µA
Quiescent Device Current	I_{CC}	V_{CC} or GND	0	5.5	-	-	8	-	80	-	160	µA
Additional Quiescent Device Current Per Input Pin: 1 Unit Load	ΔI_{CC} (Note 4)	V_{CC} - 2.1	-	4.5 to 5.5	-	100	360	-	450	-	490	µA

NOTES:

2. Limits not valid when pin 12 (instead of pin 11) is used as control input.
3. For pin 11 V_{IH} = 3.15V, V_{IL} = 0.9V.
4. For dual-supply systems theoretical worst case (V_I = 2.4V, V_{CC} = 5.5V) specification is 1.8mA.

HCT Input Loading Table

INPUT	UNIT LOADS
MR	0.35

NOTE: Unit Load is ΔI_{CC} limit specified in DC Electrical Specifications Table, e.g. 360µA max at 25°C.

Prerequisite for Switching Specifications

PARAMETER	SYMBOL	V_{CC} (V)	25°C			-40°C TO 85°C			-55°C TO 125°C			UNITS
			MIN	TYP	MAX	MIN	TYP	MAX	MIN	TYP	MAX	
HC TYPES												
Maximum Input Pulse Frequency	f_{max}	2	6	-	-	5	-	-	4	-	-	MHz
		4.5	30	-	-	25	-	-	20	-	-	MHz
		6	35	-	-	29	-	-	23	-	-	MHz
Input Pulse Width	t_W	2	80	-	-	100	-	-	120	-	-	ns
		4.5	16	-	-	20	-	-	24	-	-	ns
		6	14	-	-	17	-	-	20	-	-	ns
Reset Removal Time	t_{REM}	2	100	-	-	125	-	-	150	-	-	ns
		4.5	20	-	-	25	-	-	30	-	-	ns
		6	17	-	-	21	-	-	26	-	-	ns

Prerequisite for Switching Specifications (Continued)

PARAMETER	SYMBOL	V_{CC} (V)	25°C			-40°C TO 85°C			-55°C TO 125°C			UNITS
			MIN	TYP	MAX	MIN	TYP	MAX	MIN	TYP	MAX	
Reset Pulse Width	t_W	2	80	-	-	100	-	-	120	-	-	ns
		4.5	16	-	-	20	-	-	24	-	-	ns
		6	14	-	-	17	-	-	20	-	-	ns
HCT TYPES												
Maximum Input, Pulse Frequency	f_{max}	4.5	30	-	-	25	-	-	20	-	-	MHz
Input Pulse Width	t_W	4.5	16	-	-	20	-	-	24	-	-	ns
Reset Removal Time	t_{REM}	4.5	26	-	-	33	-	-	39	-	-	ns
Reset Pulse Width	t_W	4.5	25	-	-	31	-	-	38	-	-	ns

Switching Specifications Input t_r, t_f = 6ns

PARAMETER	SYMBOL	TEST CONDITIONS	V_{CC} (V)	25°C			-40°C TO 85°C		-55°C TO 125°C		UNITS
				MIN	TYP	MAX	MIN	MAX	MIN	MAX	
HC TYPES											
Propagation Delay ϕI to Q4	t_{PLH}, t_{PHL}	C_L = 50pF	2	-	-	300	-	375	-	450	ns
			4.5	-	-	60	-	75	-	90	ns
		C_L = 15pF	5	-	25	-	-	-	-	-	ns
		C_L = 50pF	6	-	-	51	-	64	-	78	ns
Q_n to Q_{n+1}	t_{PLH}, t_{PHL}	C_L = 50pF	2	-	-	80	-	100	-	120	ns
			4.5	-	-	16	-	20	-	24	ns
		C_L = 15pF	5	-	6	-	-	-	-	-	ns
		C_L = 50pF	6	-	-	14	-	17	-	20	ns
MR to Q_n	t_{PHL}	C_L = 50pF	2	-	-	175	-	220	-	265	ns
			4.5	-	-	35	-	44	-	53	ns
		C_L = 15pF	5	-	14	-	-	-	-	-	ns
		C_L = 50pF	6	-	-	30	-	37	-	45	ns
Output Transition Time	t_{THL}, t_{TLH}	C_L = 50pF	2	-	-	75	-	95	-	110	ns
			4.5	-	-	15	-	19	-	22	ns
			6	-	-	13	-	16	-	19	ns
Input Capacitance	C_I (TBD)										
Propagation Dissipation Capacitance (Notes 5, 6)	C_{PD}	-	-	-	40	-	-	-	-	-	pF
HCT TYPES											
Propagation Delay ϕI to Q4	t_{PLH}, t_{PHL}	C_L = 50pF	2	-	-	-	-	-	-	-	-ns
			4.5	-	-	66	-	83	-	100	ns
		C_L = 15pF	5	-	25	-	-	-	-	-	-ns
		C_L = 50pF	6	-	-	-	-	-	-	-	-ns

Switching Specifications Input t_r, t_f = 6ns **(Continued)**

PARAMETER	SYMBOL	TEST CONDITIONS	V_{CC} (V)	25°C			-40°C TO 85°C		-55°C TO 125°C		UNITS
				MIN	TYP	MAX	MIN	MAX	MIN	MAX	
Q_n to Q_{n+1}	t_{PLH}, t_{PHL}	C_L = 50pF	2	-	-	-	-	-	-	-	ns
			4.5	-	-	16	-	20	-	24	ns
		C_L = 15pF	5	-	6	-	-	-	-	-	ns
		C_L = 50pF	6	-	-	-	-	-	-	-	ns
MR to Q_n	t_{PHL}	C_L = 50pF	2	-	-	-	-	-	-	-	ns
			4.5	-	-	44	-	55	-	66	ns
		C_L = 15pF	5	-	17	-	-	-	-	-	ns
		C_L = 50pF	6	-	-	-	-	-	-	-	ns
Output Transition Time	t_{THL}, t_{TLH}	C_L = 50pF	2	-	-	-	-	-	-	-	ns
			4.5	-	-	15	-	19	-	22	ns
			6	-	-	-	-	-	-	-	ns
Input Capacitance	C_I (TBD)										
Propagation Dissipation Capacitance (Notes 5, 6)	C_{PD}	-	-	-	40	-	-	-	-	-	pF

NOTES:

5. C_{PD} is used to determine the dynamic power consumption, per package.
6. $P_D = C_{PD} V_{CC}^2 f_i \Sigma(C_L V_{CC}^2 f_i/M)$ where $M = 2^1, 2^2, 2^3, ...2^{14}$, f_i = input frequency, C_L = output load capacitance.

TYPICAL LIMIT VALUES FOR R_X AND C_X

PARAMETER	TEST CONDITIONS	VOLTAGE	TYPICAL MAXIMUM LIMITS
R_X Minimum	C_X > 1000pF	2	1KΩ
	C_X > 10pF	4.5	
	C_X > 10pF	6	
R_X Maximum	C_X > 10pF	2	20MΩ
	C_X > 10pF	4.5	
	C_X > 10pF	6	
C_X Minimum	R_X > 10KΩ	2	10pF
	R_X > 10KΩ	4.5	
	R_X > 10KΩ	6	
	R_X = 1KΩ	2	1000pF
	R_X = 1KΩ	4.5	10pF
	R_X = 1KΩ	6	10pF
Maximum Astable Oscillator Frequency	C_X = 1000pF, R_X = 1KΩ	2	0.5MHz (Note 7)
	C_X = 100pF, R_X = 1KΩ	4.5	3MHz (Note 7)
	C_X = 100pF, R_X = 1KΩ	6	3MHz (Note 7)

NOTE:

7. At very high frequencies f = 1/2.2 $R_X C_X$ no longer gives an accurate approximation.

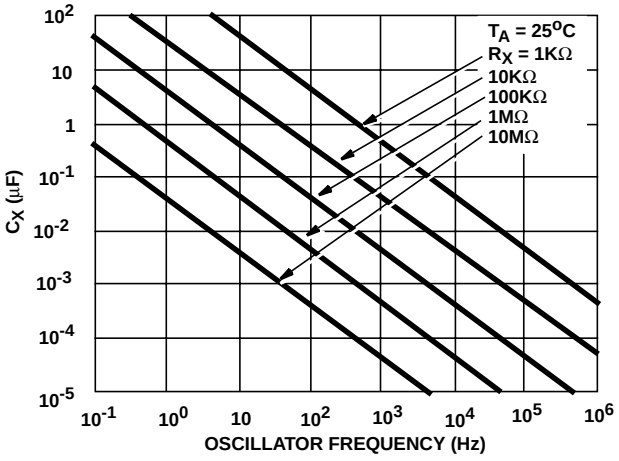

NOTE: OSC Frequency ≈ 1/2.2 $R_X C_X$
For 1MΩ > R_X > 1KΩ, C_X > 10pF, f < 1MHz

FIGURE 2. FREQUENCY OF ON-BOARD OSCILLATOR AS A FUNCTION OF C_X AND R_X

Typical Performance Curves

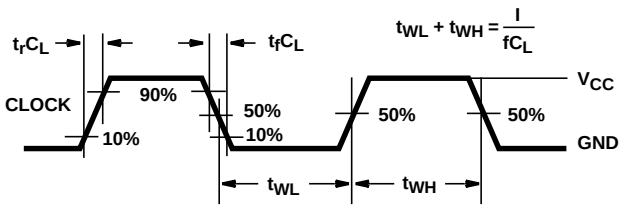

NOTE: Outputs should be switching from 10% V_{CC} to 90% V_{CC} in accordance with device truth table. For f_{MAX}, input duty cycle = 50%.

FIGURE 3. HC CLOCK PULSE RISE AND FALL TIMES AND PULSE WIDTH

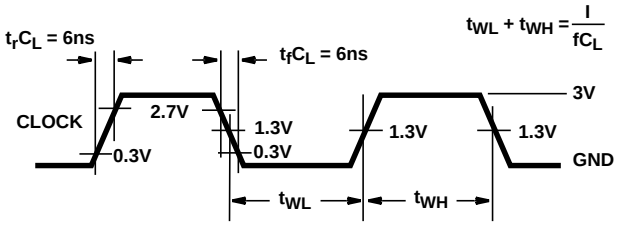

NOTE: Outputs should be switching from 10% V_{CC} to 90% V_{CC} in accordance with device truth table. For f_{MAX}, input duty cycle = 50%.

FIGURE 4. HCT CLOCK PULSE RISE AND FALL TIMES AND PULSE WIDTH

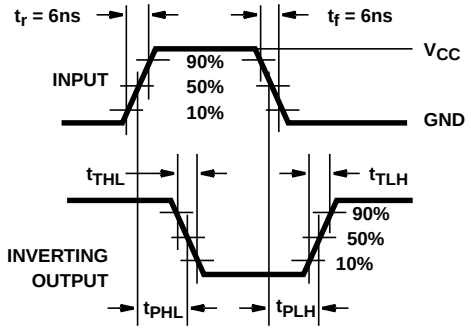

FIGURE 5. HC AND HCT TRANSITION TIMES AND PROPAGATION DELAY TIMES, COMBINATION LOGIC

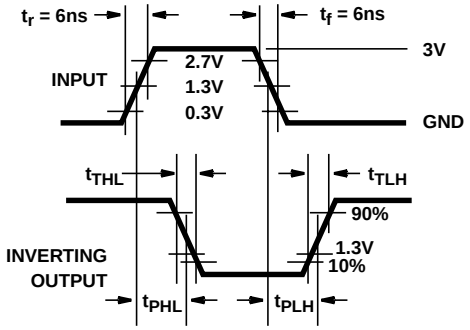

FIGURE 6. HCT TRANSITION TIMES AND PROPAGATION DELAY TIMES, COMBINATION LOGIC

PACKAGING INFORMATION

Orderable Device	Status (1)	Package Type	Package Drawing	Pins	Package Qty	Eco Plan (2)	Lead finish/ Ball material (6)	MSL Peak Temp (3)	Op Temp (°C)	Device Marking (4/5)	Samples
5962-8768001EA	ACTIVE	CDIP	J	16	1	Non-RoHS & Green	SNPB	N / A for Pkg Type	-55 to 125	5962-8768001EA CD54HC4060F3A	Samples
5962-8977101EA	ACTIVE	CDIP	J	16	1	Non-RoHS & Green	SNPB	N / A for Pkg Type	-55 to 125	5962-8977101EA CD54HCT4060F3A	Samples
CD54HC4060F3A	ACTIVE	CDIP	J	16	1	Non-RoHS & Green	SNPB	N / A for Pkg Type	-55 to 125	5962-8768001EA CD54HC4060F3A	Samples
CD54HCT4060F3A	ACTIVE	CDIP	J	16	1	Non-RoHS & Green	SNPB	N / A for Pkg Type	-55 to 125	5962-8977101EA CD54HCT4060F3A	Samples
CD74HC4060E	ACTIVE	PDIP	N	16	25	RoHS & Green	NIPDAU	N / A for Pkg Type	-55 to 125	CD74HC4060E	Samples
CD74HC4060M	ACTIVE	SOIC	D	16	40	RoHS & Green	NIPDAU	Level-1-260C-UNLIM	-55 to 125	HC4060M	Samples
CD74HC4060M96	ACTIVE	SOIC	D	16	2500	RoHS & Green	NIPDAU	Level-1-260C-UNLIM	-55 to 125	HC4060M	Samples
CD74HC4060M96G4	ACTIVE	SOIC	D	16	2500	RoHS & Green	NIPDAU	Level-1-260C-UNLIM	-55 to 125	HC4060M	Samples
CD74HC4060MG4	ACTIVE	SOIC	D	16	40	RoHS & Green	NIPDAU	Level-1-260C-UNLIM	-55 to 125	HC4060M	Samples
CD74HC4060MT	ACTIVE	SOIC	D	16	250	RoHS & Green	NIPDAU	Level-1-260C-UNLIM	-55 to 125	HC4060M	Samples
CD74HC4060PW	ACTIVE	TSSOP	PW	16	90	RoHS & Green	NIPDAU	Level-1-260C-UNLIM	-55 to 125	HJ4060	Samples
CD74HC4060PWG4	ACTIVE	TSSOP	PW	16	90	RoHS & Green	NIPDAU	Level-1-260C-UNLIM	-55 to 125	HJ4060	Samples
CD74HC4060PWR	ACTIVE	TSSOP	PW	16	2000	RoHS & Green	NIPDAU	Level-1-260C-UNLIM	-55 to 125	HJ4060	Samples
CD74HC4060PWRG4	ACTIVE	TSSOP	PW	16	2000	RoHS & Green	NIPDAU	Level-1-260C-UNLIM	-55 to 125	HJ4060	Samples
CD74HC4060PWT	ACTIVE	TSSOP	PW	16	250	RoHS & Green	NIPDAU	Level-1-260C-UNLIM	-55 to 125	HJ4060	Samples
CD74HCT4060E	ACTIVE	PDIP	N	16	25	RoHS & Green	NIPDAU	N / A for Pkg Type	-55 to 125	CD74HCT4060E	Samples
CD74HCT4060EE4	ACTIVE	PDIP	N	16	25	RoHS & Green	NIPDAU	N / A for Pkg Type	-55 to 125	CD74HCT4060E	Samples
CD74HCT4060M	ACTIVE	SOIC	D	16	40	RoHS & Green	NIPDAU	Level-1-260C-UNLIM	-55 to 125	HCT4060M	Samples
CD74HCT4060M96	ACTIVE	SOIC	D	16	2500	RoHS & Green	NIPDAU	Level-1-260C-UNLIM	-55 to 125	HCT4060M	Samples

Orderable Device	Status (1)	Package Type	Package Drawing	Pins	Package Qty	Eco Plan (2)	Lead finish/ Ball material (6)	MSL Peak Temp (3)	Op Temp (°C)	Device Marking (4/5)	Samples
CD74HCT4060M96G4	ACTIVE	SOIC	D	16	2500	RoHS & Green	NIPDAU	Level-1-260C-UNLIM	-55 to 125	HCT4060M	Samples
CD74HCT4060MT	ACTIVE	SOIC	D	16	250	RoHS & Green	NIPDAU	Level-1-260C-UNLIM	-55 to 125	HCT4060M	Samples

(1) The marketing status values are defined as follows:
ACTIVE: Product device recommended for new designs.
LIFEBUY: TI has announced that the device will be discontinued, and a lifetime-buy period is in effect.
NRND: Not recommended for new designs. Device is in production to support existing customers, but TI does not recommend using this part in a new design.
PREVIEW: Device has been announced but is not in production. Samples may or may not be available.
OBSOLETE: TI has discontinued the production of the device.

(2) **RoHS:** TI defines "RoHS" to mean semiconductor products that are compliant with the current EU RoHS requirements for all 10 RoHS substances, including the requirement that RoHS substance do not exceed 0.1% by weight in homogeneous materials. Where designed to be soldered at high temperatures, "RoHS" products are suitable for use in specified lead-free processes. TI may reference these types of products as "Pb-Free".
RoHS Exempt: TI defines "RoHS Exempt" to mean products that contain lead but are compliant with EU RoHS pursuant to a specific EU RoHS exemption.
Green: TI defines "Green" to mean the content of Chlorine (Cl) and Bromine (Br) based flame retardants meet JS709B low halogen requirements of <=1000ppm threshold. Antimony trioxide based flame retardants must also meet the <=1000ppm threshold requirement.

(3) MSL, Peak Temp. - The Moisture Sensitivity Level rating according to the JEDEC industry standard classifications, and peak solder temperature.

(4) There may be additional marking, which relates to the logo, the lot trace code information, or the environmental category on the device.

(5) Multiple Device Markings will be inside parentheses. Only one Device Marking contained in parentheses and separated by a "~" will appear on a device. If a line is indented then it is a continuation of the previous line and the two combined represent the entire Device Marking for that device.

(6) Lead finish/Ball material - Orderable Devices may have multiple material finish options. Finish options are separated by a vertical ruled line. Lead finish/Ball material values may wrap to two lines if the finish value exceeds the maximum column width.

Important Information and Disclaimer: The information provided on this page represents TI's knowledge and belief as of the date that it is provided. TI bases its knowledge and belief on information provided by third parties, and makes no representation or warranty as to the accuracy of such information. Efforts are underway to better integrate information from third parties. TI has taken and continues to take reasonable steps to provide representative and accurate information but may not have conducted destructive testing or chemical analysis on incoming materials and chemicals. TI and TI suppliers consider certain information to be proprietary, and thus CAS numbers and other limited information may not be available for release.

In no event shall TI's liability arising out of such information exceed the total purchase price of the TI part(s) at issue in this document sold by TI to Customer on an annual basis.

OTHER QUALIFIED VERSIONS OF CD54HC4060, CD54HCT4060, CD74HC4060, CD74HCT4060 :

- Catalog : CD74HC4060, CD74HCT4060
- Military : CD54HC4060, CD54HCT4060

NOTE: Qualified Version Definitions:

- Catalog - TI's standard catalog product
- Military - QML certified for Military and Defense Applications

TAPE AND REEL INFORMATION

REEL DIMENSIONS

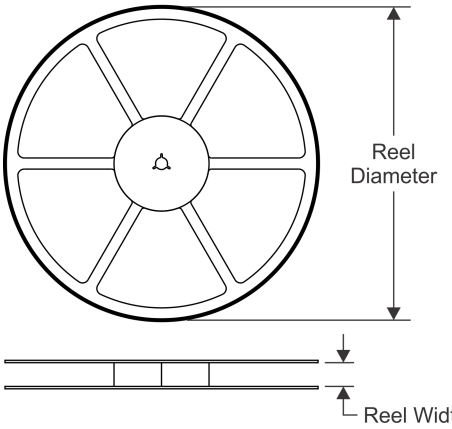

TAPE DIMENSIONS

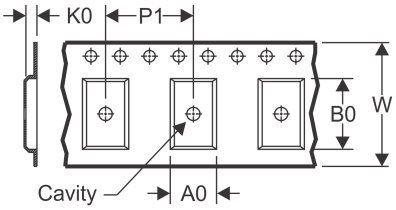

A0	Dimension designed to accommodate the component width
B0	Dimension designed to accommodate the component length
K0	Dimension designed to accommodate the component thickness
W	Overall width of the carrier tape
P1	Pitch between successive cavity centers

QUADRANT ASSIGNMENTS FOR PIN 1 ORIENTATION IN TAPE

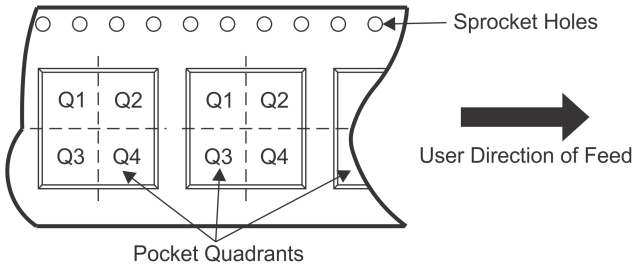

*All dimensions are nominal

Device	Package Type	Package Drawing	Pins	SPQ	Reel Diameter (mm)	Reel Width W1 (mm)	A0 (mm)	B0 (mm)	K0 (mm)	P1 (mm)	W (mm)	Pin1 Quadrant
CD74HC4060M96	SOIC	D	16	2500	330.0	16.4	6.5	10.3	2.1	8.0	16.0	Q1
CD74HC4060PWR	TSSOP	PW	16	2000	330.0	12.4	6.9	5.6	1.6	8.0	12.0	Q1
CD74HC4060PWT	TSSOP	PW	16	250	330.0	12.4	6.9	5.6	1.6	8.0	12.0	Q1
CD74HCT4060M96	SOIC	D	16	2500	330.0	16.4	6.5	10.3	2.1	8.0	16.0	Q1

TAPE AND REEL BOX DIMENSIONS

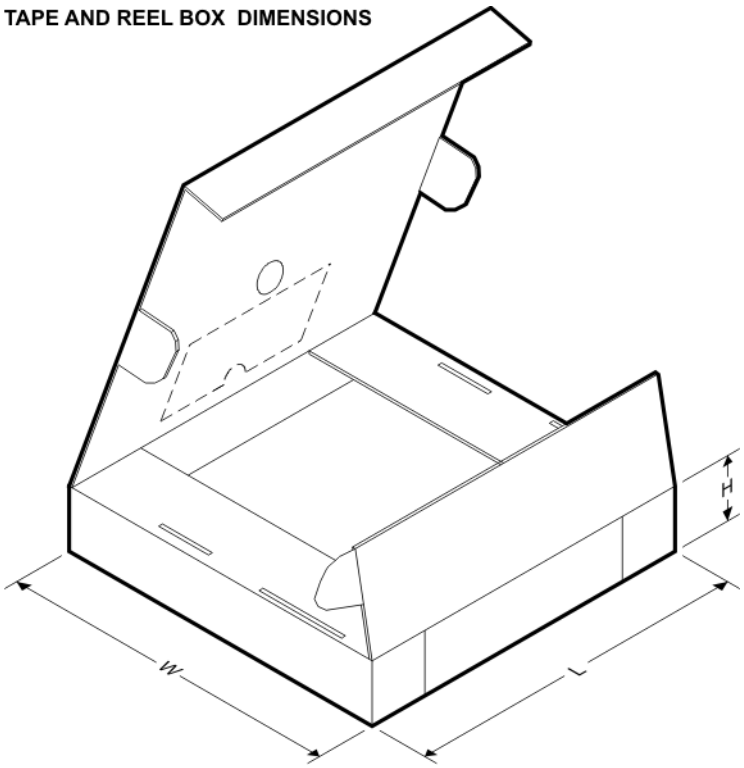

*All dimensions are nominal

Device	Package Type	Package Drawing	Pins	SPQ	Length (mm)	Width (mm)	Height (mm)
CD74HC4060M96	SOIC	D	16	2500	340.5	336.1	32.0
CD74HC4060PWR	TSSOP	PW	16	2000	853.0	449.0	35.0
CD74HC4060PWT	TSSOP	PW	16	250	853.0	449.0	35.0
CD74HCT4060M96	SOIC	D	16	2500	340.5	336.1	32.0

TUBE

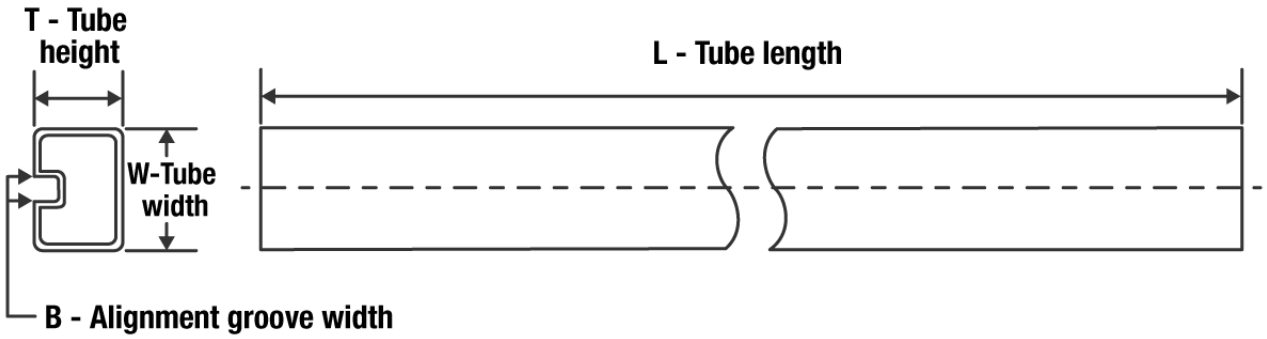

*All dimensions are nominal

Device	Package Name	Package Type	Pins	SPQ	L (mm)	W (mm)	T (µm)	B (mm)
CD74HC4060E	N	PDIP	16	25	506	13.97	11230	4.32
CD74HC4060E	N	PDIP	16	25	506	13.97	11230	4.32
CD74HC4060M	D	SOIC	16	40	507	8	3940	4.32
CD74HC4060MG4	D	SOIC	16	40	507	8	3940	4.32
CD74HC4060PW	PW	TSSOP	16	90	530	10.2	3600	3.5
CD74HC4060PWG4	PW	TSSOP	16	90	530	10.2	3600	3.5
CD74HCT4060E	N	PDIP	16	25	506	13.97	11230	4.32
CD74HCT4060E	N	PDIP	16	25	506	13.97	11230	4.32
CD74HCT4060EE4	N	PDIP	16	25	506	13.97	11230	4.32
CD74HCT4060EE4	N	PDIP	16	25	506	13.97	11230	4.32
CD74HCT4060M	D	SOIC	16	40	507	8	3940	4.32

D (R–PDSO–G16) PLASTIC SMALL OUTLINE

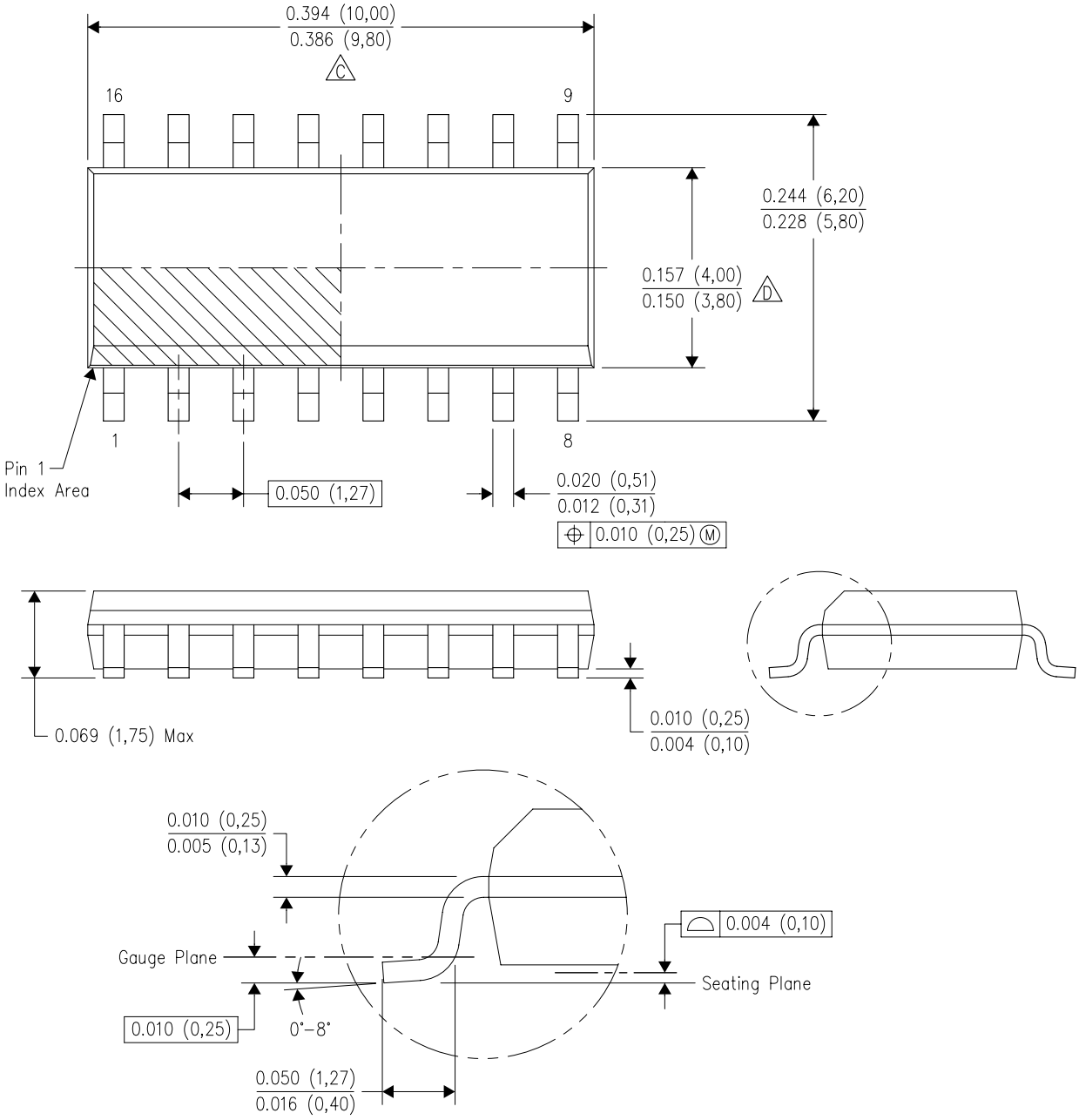

NOTES:
A. All linear dimensions are in inches (millimeters).
B. This drawing is subject to change without notice.
C. Body length does not include mold flash, protrusions, or gate burrs. Mold flash, protrusions, or gate burrs shall not exceed 0.006 (0,15) each side.
D. Body width does not include interlead flash. Interlead flash shall not exceed 0.017 (0,43) each side.
E. Reference JEDEC MS–012 variation AC.

D (R–PDSO–G16) PLASTIC SMALL OUTLINE

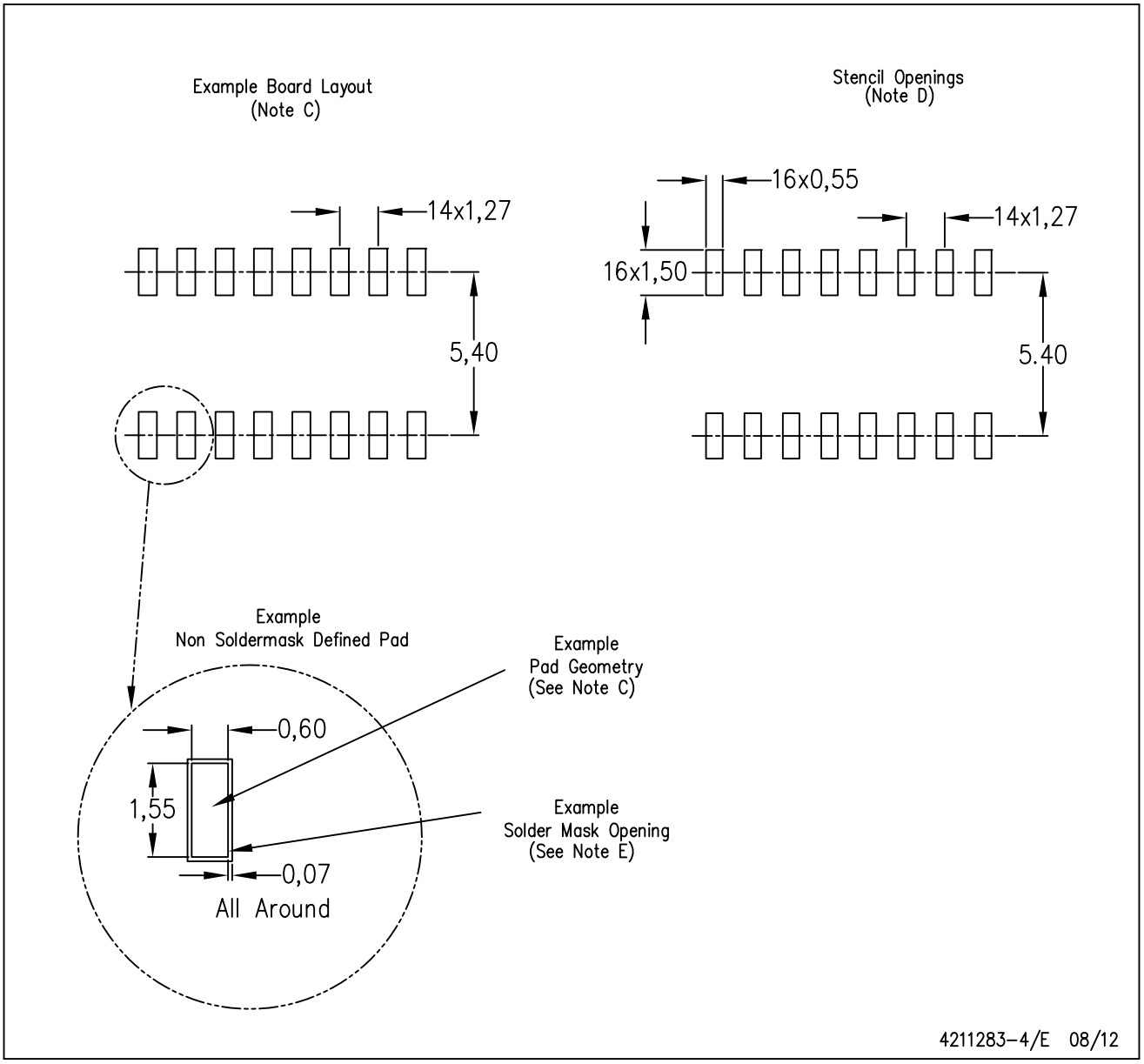

NOTES:
A. All linear dimensions are in millimeters.
B. This drawing is subject to change without notice.
C. Publication IPC–7351 is recommended for alternate designs.
D. Laser cutting apertures with trapezoidal walls and also rounding corners will offer better paste release. Customers should contact their board assembly site for stencil design recommendations. Refer to IPC–7525 for other stencil recommendations.
E. Customers should contact their board fabrication site for solder mask tolerances between and around signal pads.

PACKAGE OUTLINE

PW0016A

TSSOP - 1.2 mm max height

SMALL OUTLINE PACKAGE

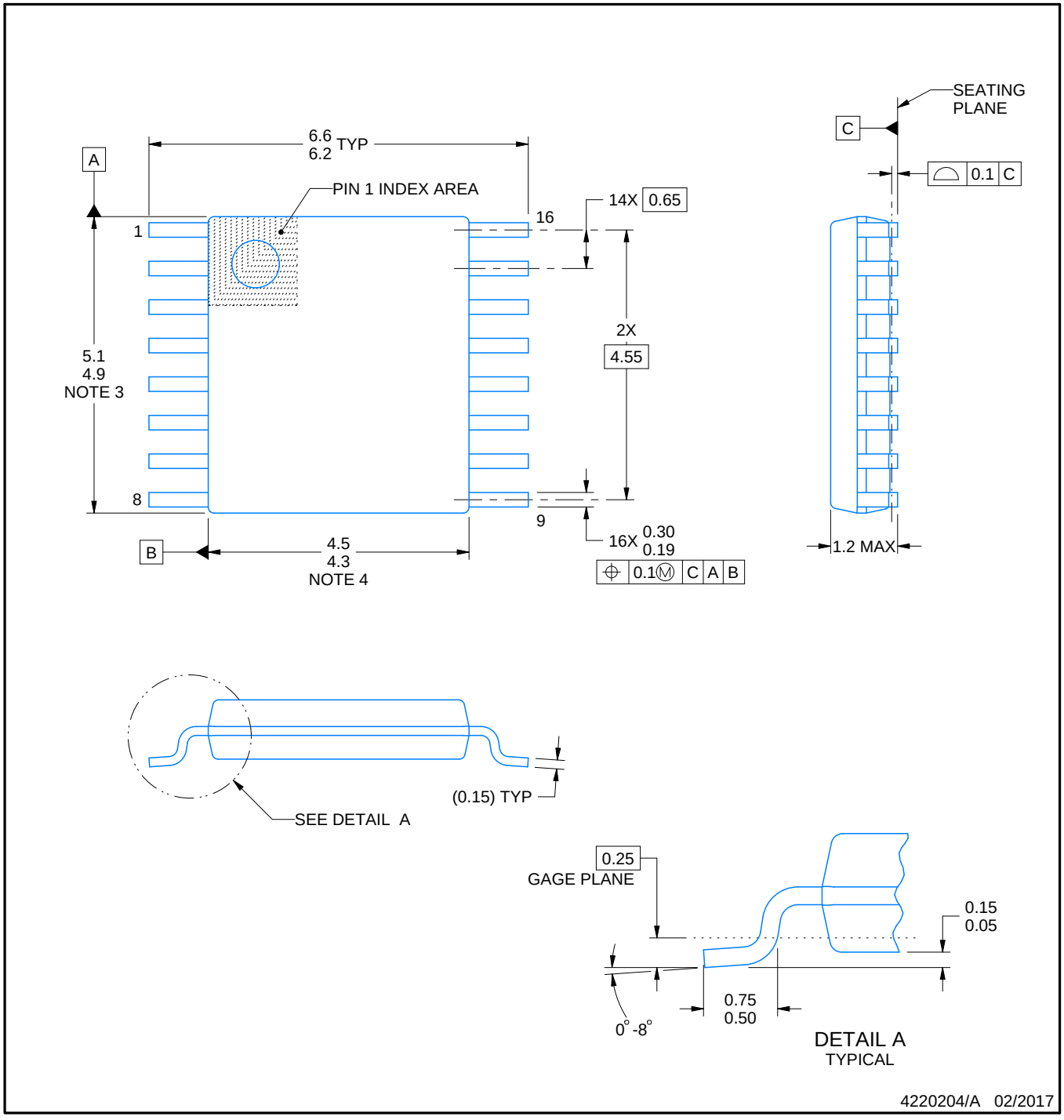

NOTES:

1. All linear dimensions are in millimeters. Any dimensions in parenthesis are for reference only. Dimensioning and tolerancing per ASME Y14.5M.
2. This drawing is subject to change without notice.
3. This dimension does not include mold flash, protrusions, or gate burrs. Mold flash, protrusions, or gate burrs shall not exceed 0.15 mm per side.
4. This dimension does not include interlead flash. Interlead flash shall not exceed 0.25 mm per side.
5. Reference JEDEC registration MO-153.

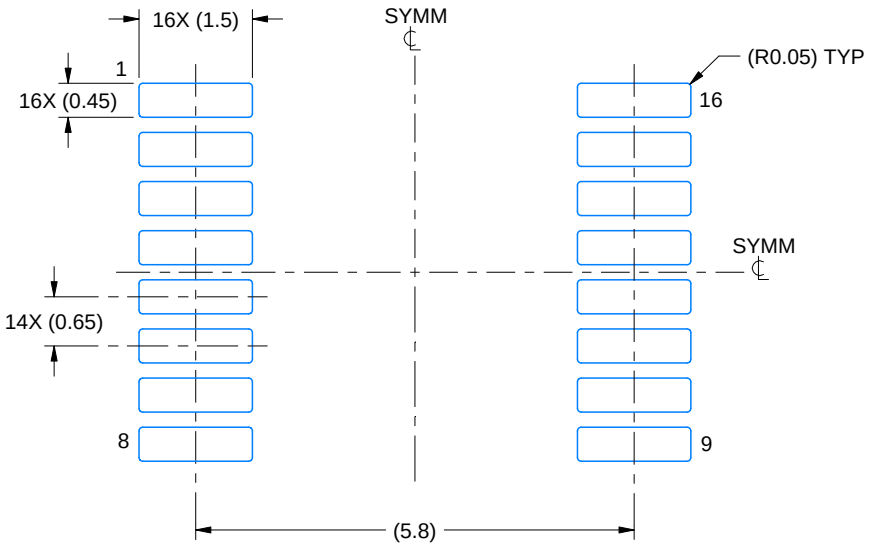

LAND PATTERN EXAMPLE
EXPOSED METAL SHOWN
SCALE: 10X

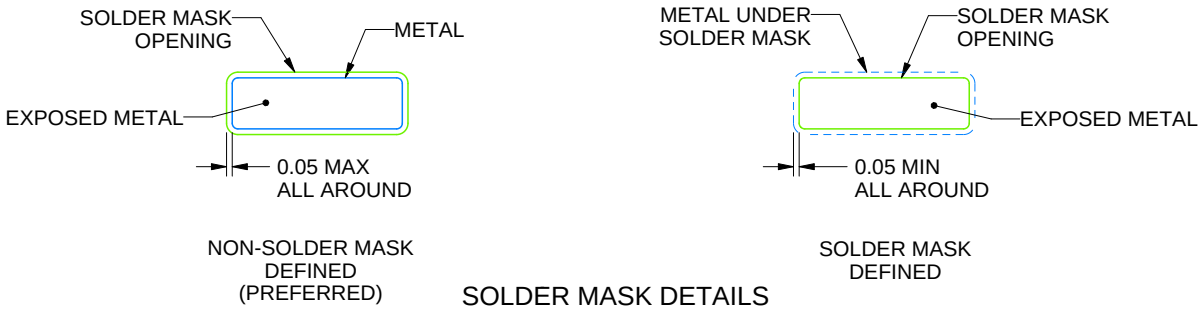

SOLDER MASK DETAILS

4220204/A 02/2017

NOTES: (continued)

6. Publication IPC-7351 may have alternate designs.
7. Solder mask tolerances between and around signal pads can vary based on board fabrication site.

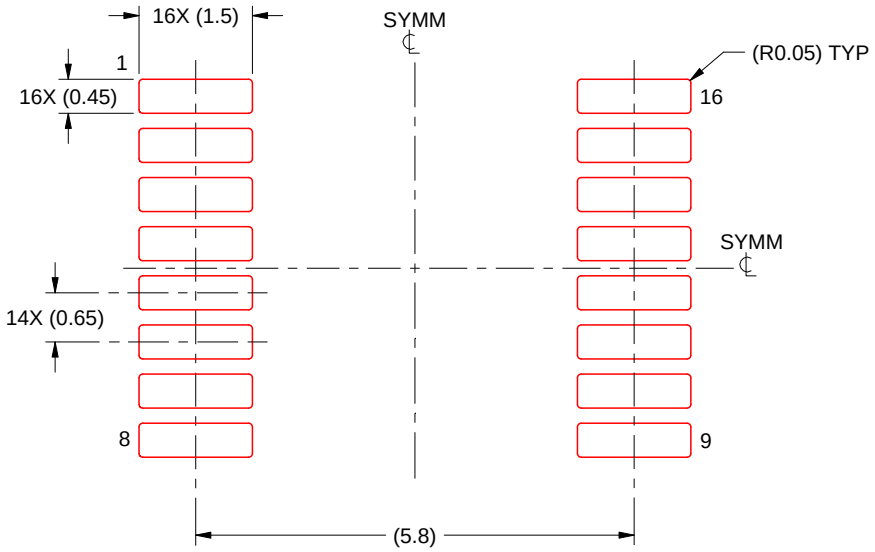

SOLDER PASTE EXAMPLE
BASED ON 0.125 mm THICK STENCIL
SCALE: 10X

4220204/A 02/2017

NOTES: (continued)

8. Laser cutting apertures with trapezoidal walls and rounded corners may offer better paste release. IPC-7525 may have alternate design recommendations.
9. Board assembly site may have different recommendations for stencil design.

J (R–GDIP–T**)

14 LEADS SHOWN

CERAMIC DUAL IN–LINE PACKAGE

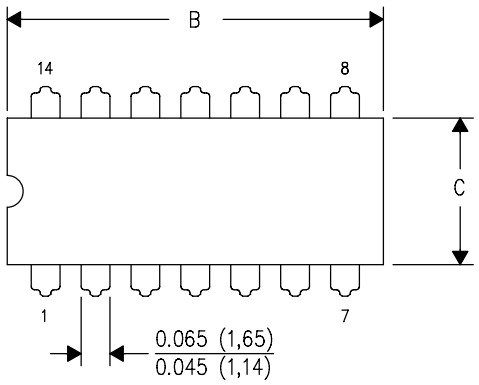

DIM \ PINS **	14	16	18	20
A	0.300 (7,62) BSC	0.300 (7,62) BSC	0.300 (7,62) BSC	0.300 (7,62) BSC
B MAX	0.785 (19,94)	.840 (21,34)	0.960 (24,38)	1.060 (26,92)
B MIN	—	—	—	—
C MAX	0.300 (7,62)	0.300 (7,62)	0.310 (7,87)	0.300 (7,62)
C MIN	0.245 (6,22)	0.245 (6,22)	0.220 (5,59)	0.245 (6,22)

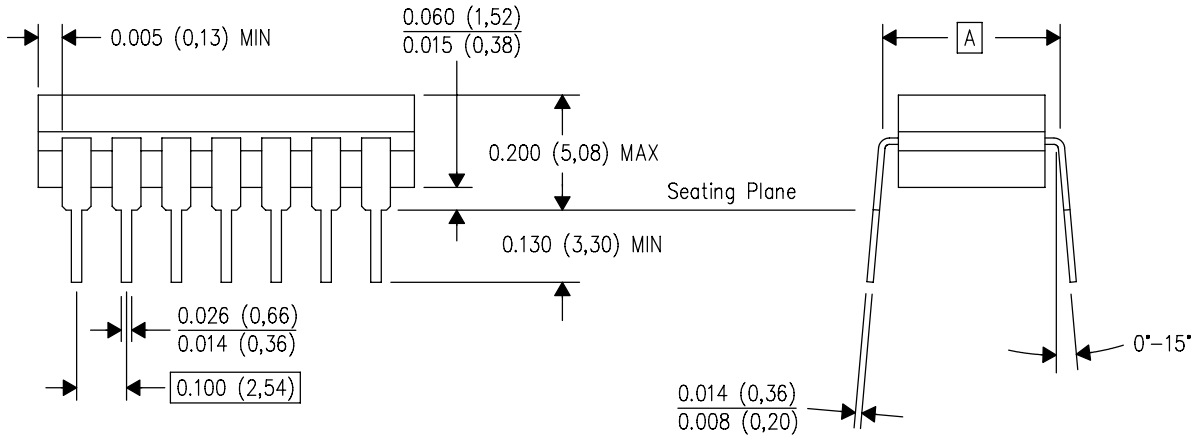

4040083/F 03/03

NOTES:
A. All linear dimensions are in inches (millimeters).
B. This drawing is subject to change without notice.
C. This package is hermetically sealed with a ceramic lid using glass frit.
D. Index point is provided on cap for terminal identification only on press ceramic glass frit seal only.
E. Falls within MIL STD 1835 GDIP1–T14, GDIP1–T16, GDIP1–T18 and GDIP1–T20.

N (R–PDIP–T**)

PLASTIC DUAL–IN–LINE PACKAGE

16 PINS SHOWN

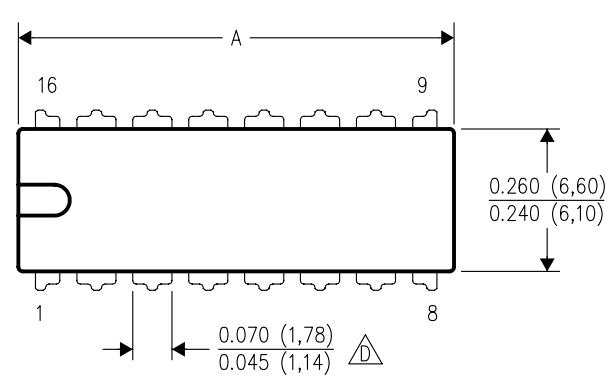

DIM \ PINS **	14	16	18	20
A MAX	0.775 (19,69)	0.775 (19,69)	0.920 (23,37)	1.060 (26,92)
A MIN	0.745 (18,92)	0.745 (18,92)	0.850 (21,59)	0.940 (23,88)
MS–001 VARIATION (C)	AA	BB	AC	AD

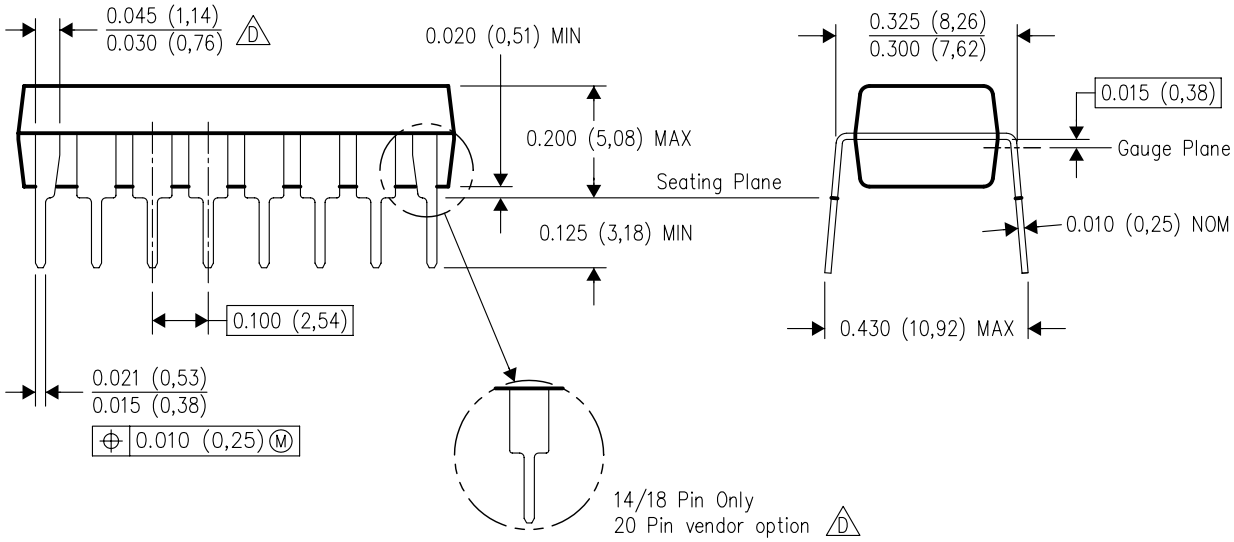

4040049/E 12/2002

NOTES:
A. All linear dimensions are in inches (millimeters).
B. This drawing is subject to change without notice.
C. Falls within JEDEC MS–001, except 18 and 20 pin minimum body length (Dim A).
D. The 20 pin end lead shoulder width is a vendor option, either half or full width.

IMPORTANT NOTICE AND DISCLAIMER

TI PROVIDES TECHNICAL AND RELIABILITY DATA (INCLUDING DATA SHEETS), DESIGN RESOURCES (INCLUDING REFERENCE DESIGNS), APPLICATION OR OTHER DESIGN ADVICE, WEB TOOLS, SAFETY INFORMATION, AND OTHER RESOURCES “AS IS” AND WITH ALL FAULTS, AND DISCLAIMS ALL WARRANTIES, EXPRESS AND IMPLIED, INCLUDING WITHOUT LIMITATION ANY IMPLIED WARRANTIES OF MERCHANTABILITY, FITNESS FOR A PARTICULAR PURPOSE OR NON-INFRINGEMENT OF THIRD PARTY INTELLECTUAL PROPERTY RIGHTS.

These resources are intended for skilled developers designing with TI products. You are solely responsible for (1) selecting the appropriate TI products for your application, (2) designing, validating and testing your application, and (3) ensuring your application meets applicable standards, and any other safety, security, regulatory or other requirements.

These resources are subject to change without notice. TI grants you permission to use these resources only for development of an application that uses the TI products described in the resource. Other reproduction and display of these resources is prohibited. No license is granted to any other TI intellectual property right or to any third party intellectual property right. TI disclaims responsibility for, and you will fully indemnify TI and its representatives against, any claims, damages, costs, losses, and liabilities arising out of your use of these resources.

TI’s products are provided subject to TI’s Terms of Sale or other applicable terms available either on ti.com or provided in conjunction with such TI products. TI’s provision of these resources does not expand or otherwise alter TI’s applicable warranties or warranty disclaimers for TI products.

TI objects to and rejects any additional or different terms you may have proposed.

Mailing Address: Texas Instruments, Post Office Box 655303, Dallas, Texas 75265
Copyright © 2022, Texas Instruments Incorporated