SN74CBTLV3257 低电压、4 位、2 选 1 FET 多路复用器/多路解复用器

1 特性

- 两个端口间使用 5Ω 开关连接
- 数据 I/O 端口上的轨至轨开关
- I_{off} 支持局部关断模式运行
- 闩锁性能超出 JESD 78 II 类规范要求的 100mA
- 静电放电 (ESD) 保护性能超过 JESD 22 规范的要求
  - 2000V 人体放电模型 (A114-A)
  - 200V 机器模型 (A115-A)

2 应用范围

- 物联网
- 无线耳机
- 电视机
- 4 位总线多路复用和多路解复用

3 说明

SN74CBTLV3257 器件是一款 4 位 2 选 1 高速 FET 多路复用器/多路解复用器。此开关具有低通态电阻，可以在最短传播延迟情况下建立连接。

选择 (S) 输入控制数据流。当输出使能 ($\overline{OE}$) 输入为高电平时，FET 多路复用器/多路解复用器被禁用。

该器件完全 适用于 使用 I_{off} 的局部掉电应用。I_{off} 特性确保在关断时防止损坏电流通过器件回流。该器件可在关断时提供隔离。

为了确保加电或断电期间的高阻抗状态，$\overline{OE}$ 应通过一个上拉电阻器被连接至 V_{CC}；该电阻器的最小值由驱动器的电流吸入能力来决定。

器件信息(1)

器件型号	封装	封装尺寸（标称值）
SN74CBTLV3257DBQ	SSOP (16)	4.90mm × 3.90mm
SN74CBTLV3257PW	TSSOP (16)	5.00mm × 4.40mm
SN74CBTLV3257DGV	TVSOP (16)	3.60mm × 4.40mm
SN74CBTLV3257D	SOIC (16)	9.90mm x 3.91mm
SN74CBTLV3257RGY	VQFN (16)	4.00mm × 3.50mm
SN74CBTLV3257RSV	UQFN (16)	2.60mm x 1.80mm

(1) 如需了解所有可用封装，请参阅产品说明书末尾的可订购产品附录。

简化原理图（每个 **FET** 开关）

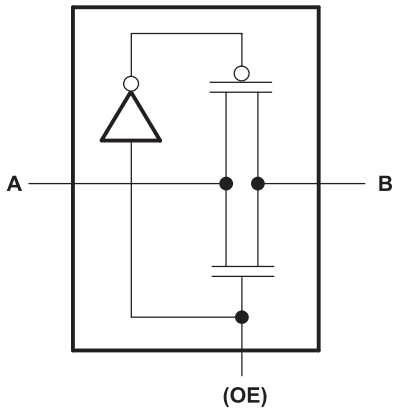

An IMPORTANT NOTICE at the end of this data sheet addresses availability, warranty, changes, use in safety-critical applications, intellectual property matters and other important disclaimers. PRODUCTION DATA.

目录

1 特性 ... 1
2 应用范围 ... 1
3 说明 ... 1
4 修订历史记录 ... 2
5 **Pin Configuration and Functions** ... 3
6 **Specifications** ... 5
6.1 Absolute Maximum Ratings ... 5
6.2 ESD Ratings ... 5
6.3 Recommended Operating Conditions ... 5
6.4 Thermal Information ... 5
6.5 Electrical Characteristics ... 6
6.6 Switching Characteristics ... 6
7 **Parameter Measurement Information** ... 7
8 **Detailed Description** ... 8
8.1 Overview ... 8
8.2 Functional Block Diagram ... 8
8.3 Feature Description ... 8
8.4 Device Functional Modes ... 8
9 **Application and Implementation** ... 9
9.1 Application Information ... 9
9.2 Typical Application ... 9
10 **Power Supply Recommendations** ... 10
11 **Layout** ... 11
11.1 Layout Guidelines ... 11
11.2 Layout Example ... 11
12 器件和文档支持 ... 12
12.1 文档支持 ... 12
12.2 接收文档更新通知 ... 12
12.3 社区资源 ... 12
12.4 商标 ... 12
12.5 静电放电警告 ... 12
12.6 术语表 ... 12
13 机械、封装和可订购信息 ... 12

4 修订历史记录

注：之前版本的页码可能与当前版本有所不同。

Changes from Revision L (October 2016) to Revision M **Page**

- Changed the pin images appearance ... 3
- Changed the *Thermal Information* table ... 5

Changes from Revision K (April 2015) to Revision L **Page**

- 已添加 将 TSSOP (16) 添加到*器件信息* 表 ... 1
- Added Junction temperature, T_J in *Absolute Maximum Ratings* ... 5
- Changed wording in *Detailed Design Procedure* to clarify device operation ... 10
- 已添加 *添加了接收文档更新通知* 部分和*社区资源* 部分 ... 12

Changes from Revision J (December 2012) to Revision K **Page**

- 删除了*订购信息* 表，请参阅*机械、封装和可订购信息* ... 1
- 已添加 *引脚配置和功能* 部分，*ESD 额定值* 表，*特性 说明* 部分、*器件功能模式*、*应用和实施* 部分、*电源相关建议* 部分、*布局* 部分、*器件和文档支持* 部分以及*机械、封装和可订购信息* 部分 ... 1
- 已添加 *应用*. ... 1
- 已添加 *器件信息* 表。 ... 1

Changes from Revision I (October 2003) to Revision J **Page**

- 添加了 QFN 订购信息和封装引脚布局 ... 1

Copyright © 1997–2018, Texas Instruments Incorporated

5 Pin Configuration and Functions

D, DBQ, DGV, and PW Package
16-Pin SOIC, SSOP, TVSOP, and TSSOP
(Top View)

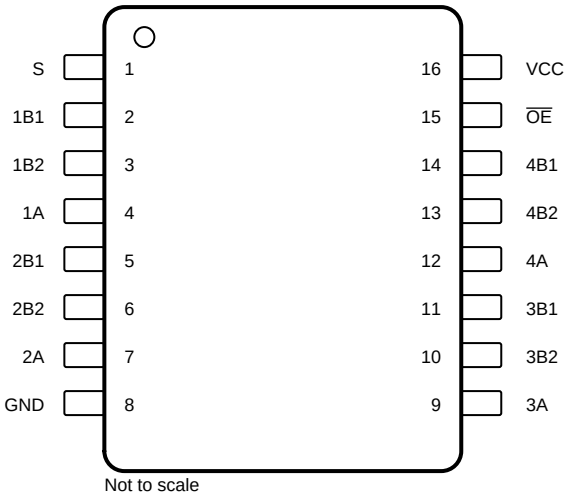

Not to scale

RGY Package
16-Pin VQFN
(Top View)

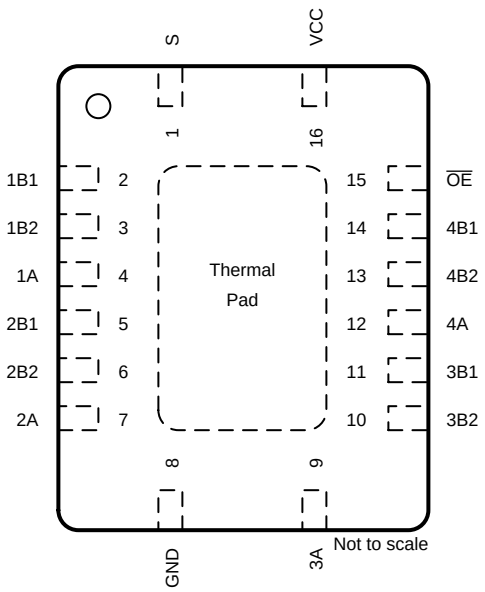

Not to scale

RSV Package
16-Pin UQFN
(Top View)

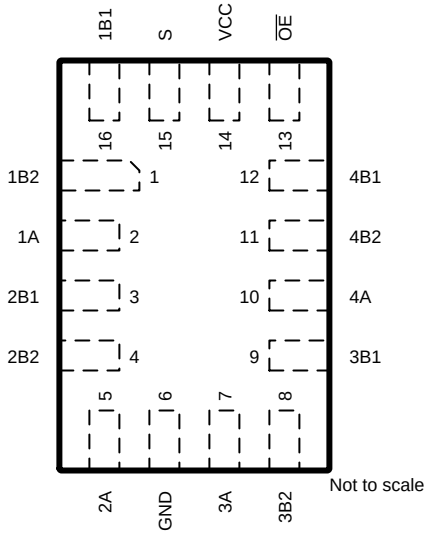

Not to scale

Pin Functions

PIN			I/O	DESCRIPTION
NAME	SOIC, SSOP, TVSOP, TSSOP, VQFN	UQFN		
1A	4	2	I/O	Channel 1 out/in common
1B1	2	16	I/O	Channel 1 in/out 1
1B2	3	1	I/O	Channel 1 in/out 2
2A	7	5	I/O	Channel 2 out/in common
2B1	5	3	I/O	Channel 2 in/out 1
2B2	6	4	I/O	Channel 2 in/out 2
3A	9	7	I/O	Channel 3 out/in common
3B1	11	9	I/O	Channel 3 in/out 1
3B2	10	8	I/O	Channel 3 in/out 2
4A	12	10	I/O	Channel 4 out/in common
4B1	14	12	I/O	Channel 4 in/out 1
4B2	13	11	I/O	Channel 4 in/out 2
GND	8	6	—	Ground
$\overline{OE}$	15	13	I	Output Enable, active low
S	1	15	I	Select
V_{CC}	16	14	—	Power

Copyright © 1997–2018, Texas Instruments Incorporated

6 Specifications

6.1 Absolute Maximum Ratings

over operating free-air temperature range (unless otherwise noted)(1)

			MIN	MAX	UNIT
V_{CC}	Supply voltage		–0.5	4.6	V
V_I	Input voltage(2)		–0.5	4.6	V
	Continuous channel current			128	mA
I_{IK}	Input clamp current	$V_{I/O} < 0$		–50	mA
T_J	Junction temperature			150	°C
T_{stg}	Storage temperature		–65	150	°C

(1) Stresses beyond those listed under *Absolute Maximum Ratings* may cause permanent damage to the device. These are stress ratings only, and functional operation of the device at these or any other conditions beyond those indicated under *Recommended Operating Conditions* is not implied. Exposure to absolute-maximum-rated conditions for extended periods may affect device reliability.
(2) The input and output negative-voltage ratings may be exceeded if the input and output clamp-current ratings are observed.

6.2 ESD Ratings

			VALUE	UNIT
$V_{(ESD)}$	Electrostatic discharge	Human-body model (HBM), per ANSI/ESDA/JEDEC JS-001(1)	2000	V

(1) JEDEC document JEP155 states that 500-V HBM allows safe manufacturing with a standard ESD control process.

6.3 Recommended Operating Conditions

over operating free-air temperature range (unless otherwise noted)(1)

			MIN	MAX	UNIT
V_{CC}	Supply voltage		2.3	3.6	V
V_{IH}	High-level control input voltage	V_{CC} = 2.3 V to 2.7 V	1.7		V
		V_{CC} = 2.7 V to 3.6 V	2		
V_{IL}	Low-level control input voltage	V_{CC} = 2.3 V to 2.7 V		0.7	V
		V_{CC} = 2.7 V to 3.6 V		0.8	
T_A	Operating free-air temperature		–40	85	°C

(1) All unused control inputs of the device must be held at V_{CC} or GND to ensure proper device operation. See *Implications of Slow or Floating CMOS Inputs*SCBA004.

6.4 Thermal Information

THERMAL METRIC(1)		SN74CBTLV3257					UNIT
		D	DBQ	DGV	PW	RGY	
		16 PINS	16 PINS	16 PINS	16 PINS	16 PINS	
$R_{\theta JA}$	Junction-to-ambient thermal resistance	86.7	112.4	123.1	110.9	43.8	°C/W
$R_{\theta JC(top)}$	Junction-to-case (top) thermal resistance	47.8	63.6	48.7	45.8	57.2	°C/W
$R_{\theta JB}$	Junction-to-board thermal resistance	43.7	54.8	54.9	56.0	21.4	°C/W
ψJT	Junction-to-top characterization parameter	12.3	17.0	5.2	5.4	1.7	°C/W
ψJB	Junction to baord characterization parameter	43.5	54.4	54.3	55.4	21.5	°C/W
$R_{\theta JC(bottom)}$	Junction-to-case (bottom) thermal resistance	-	-	-	-	9.7	°C/W

(1) For more information about traditional and new thermal metrics, see the *Semiconductor and IC Package Thermal Metrics* application report.

Copyright © 1997–2018, Texas Instruments Incorporated

6.5 Electrical Characteristics

over recommended operating free-air temperature range (unless otherwise noted)

PARAMETER		TEST CONDITIONS			MIN	TYP(1)	MAX	UNIT
V_{IK}		V_{CC} = 3 V,	I_I = –18 mA				–1.2	V
I_I		V_{CC} = 3.6 V,	V_I = V_{CC} or GND				±1	µA
I_{off}		V_{CC} = 0,	V_I or V_O = 0 to 3.6 V				15	µA
I_{CC}		V_{CC} = 3.6 V,	I_O = 0,	V_I = V_{CC} or GND			10	µA
ΔI_{CC}(2)	Control inputs	V_{CC} = 3.6 V,	One input at 3 V,	Other inputs at V_{CC} or GND			300	µA
C_i		V_I = 3 V or 0				3		pF
$C_{io(OFF)}$	A port	V_O = 3 V or 0,	$\overline{OE}$ = V_{CC}			10.5		pF
	B port					5.5		
r_{on}(3)		V_{CC} = 2.3 V, TYP at V_{CC} = 2.5 V	V_I = 0	I_I = 64 mA		5	8	Ω
				I_I = 24 mA		5	8	
			V_I = 1.7 V	I_I = 15 mA		27	40	
		V_{CC} = 3 V	V_I = 0	I_I = 64 mA		5	7	
				I_I = 24 mA		5	7	
			V_I = 2.4 V	I_I = 15 mA		10	15	

(1) All typical values are at V_{CC} = 3.3 V (unless otherwise noted), T_A = 25°C.
(2) This is the increase in supply current for each input that is at the specified voltage level, rather than V_{CC} or GND.
(3) Measured by the voltage drop between the A and the B terminals at the indicated current through the switch. On-state resistance is determined by the lower of the voltages of the two (A or B) terminals.

6.6 Switching Characteristics

over recommended operating free-air temperature range (unless otherwise noted) (See Figure 1)

PARAMETER	FROM (INPUT)	TO (OUTPUT)	V_{CC} = 2.5 ± 0.2 V		V_{CC} = 3.3 V ± 0.3 V		UNIT
			MIN	MAX	MIN	MAX	
t_{pd}	A or B(1)	B or A		0.15		0.25	ns
	S	A or B	1.8	6.1	1.8	5.3	
t_{en}	S	A or B	1.7	6.1	1.7	5.3	ns
t_{dis}	S	A or B	1	4.8	1	4.5	ns
t_{en}	$\overline{OE}$	A or B	1.9	5.6	2	5	ns
t_{dis}	$\overline{OE}$	A or B	1	5.5	1.6	5.5	ns

(1) The propagation delay is the calculated RC time constant of the typical on-state resistance of the switch and the specified load capacitance, when driven by an ideal voltage source (zero output impedance).

Copyright © 1997–2018, Texas Instruments Incorporated

7 Parameter Measurement Information

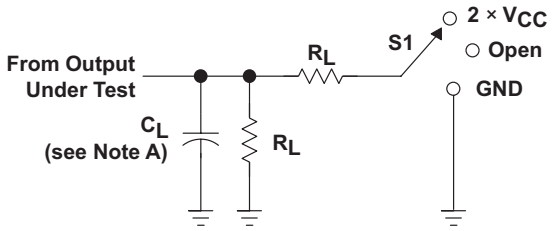

LOAD CIRCUIT

TEST	S1
t_{PLH}/t_{PHL} t_{PLZ}/t_{PZL} t_{PHZ}/t_{PZH}	Open 2 × V_{CC} GND

V_{CC}	C_L	R_L	V_Δ
2.5 V ± 0.2 V	30 pF	500 Ω	0.15 V
3.3 V ± 0.3 V	50 pF	500 Ω	0.3 V

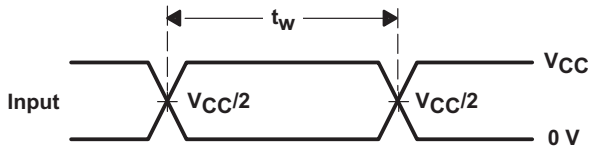

VOLTAGE WAVEFORMS
PULSE DURATION

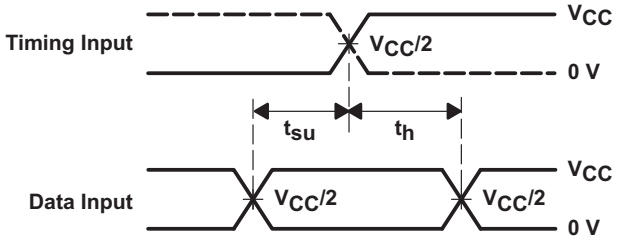

VOLTAGE WAVEFORMS
SETUP AND HOLD TIMES

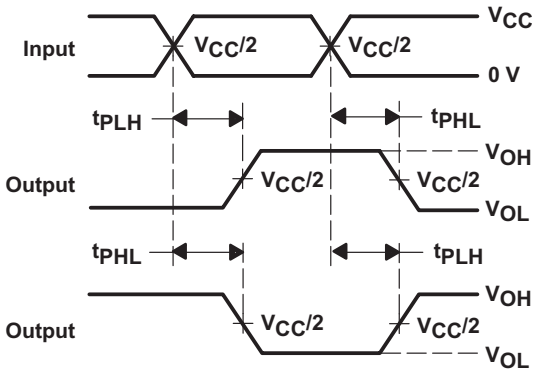

VOLTAGE WAVEFORMS
PROPAGATION DELAY TIMES
INVERTING AND NONINVERTING OUTPUTS

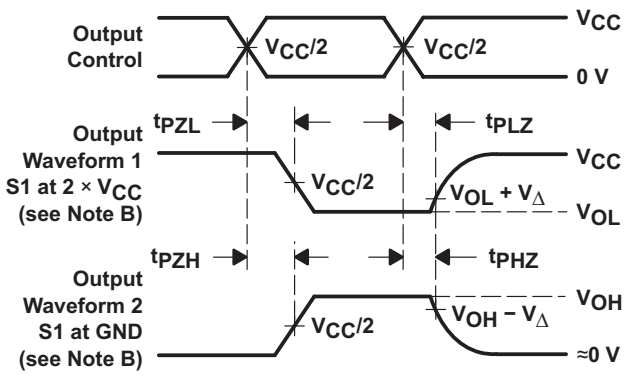

VOLTAGE WAVEFORMS
ENABLE AND DISABLE TIMES
LOW- AND HIGH-LEVEL ENABLING

NOTES: A. C_L includes probe and jig capacitance.
B. Waveform 1 is for an output with internal conditions such that the output is low except when disabled by the output control. Waveform 2 is for an output with internal conditions such that the output is high except when disabled by the output control.
C. All input pulses are supplied by generators having the following characteristics: PRR ≤ 10 MHz, Z_O = 50 Ω, t_r ≤ 2 ns, t_f ≤ 2 ns.
D. The outputs are measured one at a time with one transition per measurement.
E. t_{PLZ} and t_{PHZ} are the same as t_{dis}.
F. t_{PZL} and t_{PZH} are the same as t_{en}.
G. t_{PLH} and t_{PHL} are the same as t_{pd}.
H. All parameters and waveforms are not applicable to all devices.

Figure 1. Load Circuit and Voltage Waveforms

Copyright © 1997–2018, Texas Instruments Incorporated

8 Detailed Description

8.1 Overview

The SN74CBTLV3257 device is a 4-bit 1-of-2 high-speed FET multiplexer and demultiplexer. The low ON-state resistance of the switch allows connections to be made with minimal propagation delay.

The select (S) input controls the data flow. The FET multiplexers and demultiplexers are disabled when the output-enable ($\overline{OE}$) input is high.

This device is fully specified for partial-power-down applications using I_{off}. The I_{off} feature ensures that damaging current will not backflow through the device when it is powered down. The device has isolation during power off.

To ensure the high-impedance state during power up or power down, $\overline{OE}$ should be tied to V_{CC} through a pullup resistor; the minimum value of the resistor is determined by the current-sinking capability of the driver.

8.2 Functional Block Diagram

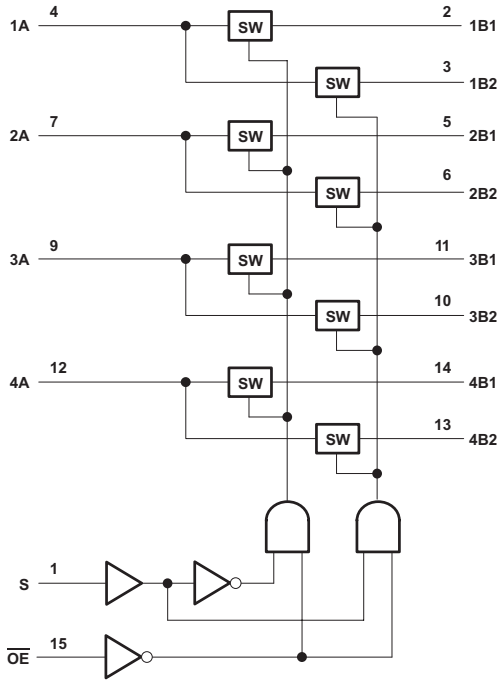

8.3 Feature Description

The SN74CBTLV3257 features 5-Ω switch connection between ports, allowing for low signal loss across the switch. Rail-to-rail switching on data I/O allows for full voltage swing outputs. I_{off} supports partial-power-down mode operation, protecting the chip from voltages at output ports when it is not powered on. Latch-up performance exceeds 100 mA per JESD 78, Class II.

8.4 Device Functional Modes

Table 1 shows the functional modes of SN74CBTLV3257.

Table 1. Function Table

INPUTS		FUNCTION
$\overline{OE}$	S	
L	L	A port = B1 port
L	H	A port = B2 port
H	X	Disconnect

Copyright © 1997–2018, Texas Instruments Incorporated

9 Application and Implementation

NOTE

Information in the following applications sections is not part of the TI component specification, and TI does not warrant its accuracy or completeness. TI's customers are responsible for determining suitability of components for their purposes. Customers should validate and test their design implementation to confirm system functionality.

9.1 Application Information

The SN74CBTLV3257 can be used to multiplex and demultiplex up to 4 channels simultaneously in a 2:1 configuration. The application shown here is a 4-bit bus being multiplexed between two devices. the $\overline{OE}$ and S pins are used to control the chip from the bus controller. This is a very generic example, and could apply to many situations. If an application requires less than 4 bits, be sure to tie the A side to either high or low on unused channels.

9.2 Typical Application

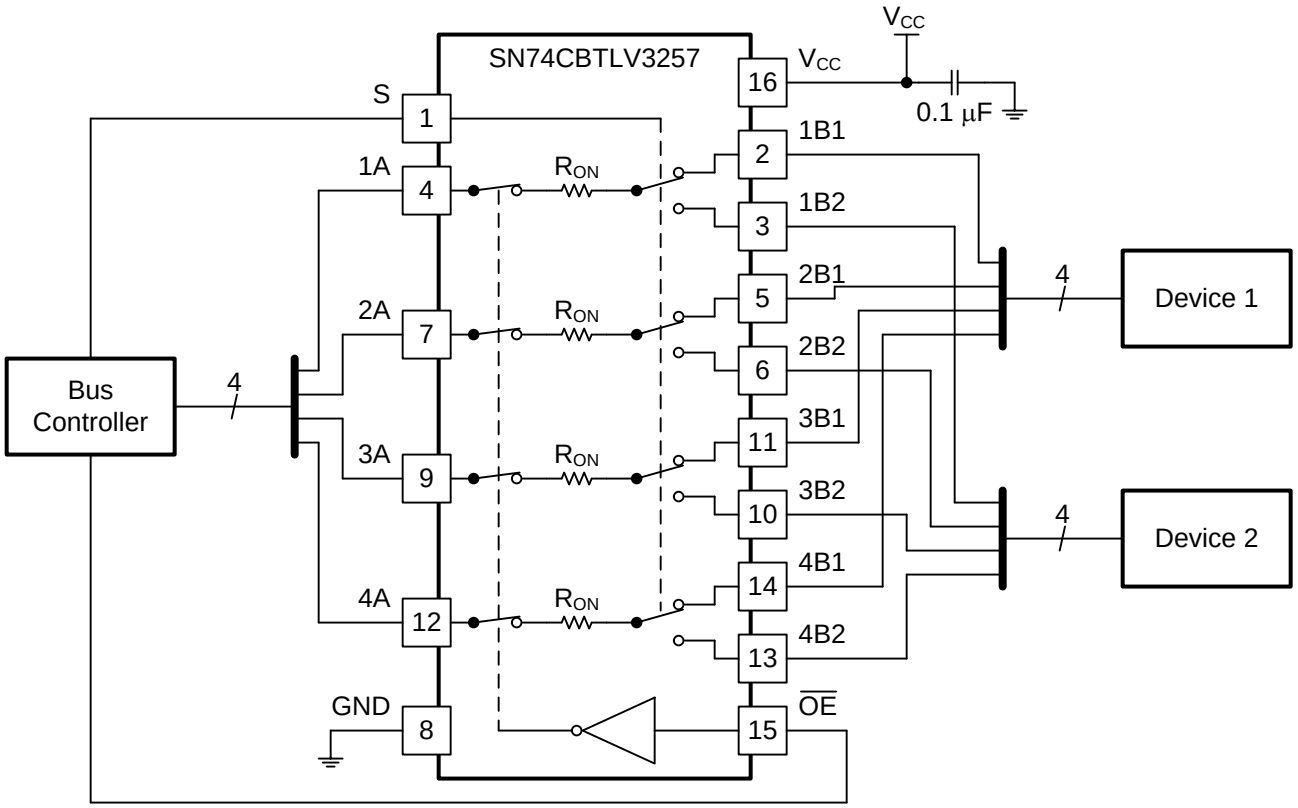

Figure 2. Typical Application of the SN74CBTLV3257

9.2.1 Design Requirements

1. Recommended Input Conditions:
   - For specified high and low levels, see V_{IH} and V_{IL} in *Recommended Operating Conditions*.
   - Inputs and outputs are overvoltage tolerant slowing them to go as high as 4.6 V at any valid V_{CC}.
2. Recommended Output Conditions:
   - Load currents should not exceed ±128 mA per channel.
3. Frequency Selection Criterion:
   - Maximum frequency tested is 200 MHz.

Copyright © 1997–2018, Texas Instruments Incorporated

Typical Application (continued)

– Added trace resistance/capacitance can reduce maximum frequency capability; use layout practices as directed in *Layout*.

9.2.2 Detailed Design Procedure

The 4-bit bus is connected directly to the 1A, 2A, 3A, and 4A ports (known as the xA port) on the SN74CBTLV3257, which essentially splits it into two busses, coming out of the xB1 and xB2 ports. When S is high, xB2 is the active bus, and when S is low, xB1 is the active bus. This means that Device 2 is connected to the bus controller when S is high, and Device 1 is connected to the bus controller when S is low. This setup is especially useful when two devices are hard coded with the same address and only one bus is available. The $\overline{OE}$ connection can be used to disconnect all devices from the bus controller if necessary.

The 0.1-µF capacitor on V_{CC} is a decoupling capacitor and should be placed as close as possible to the device.

9.2.3 Application Curve

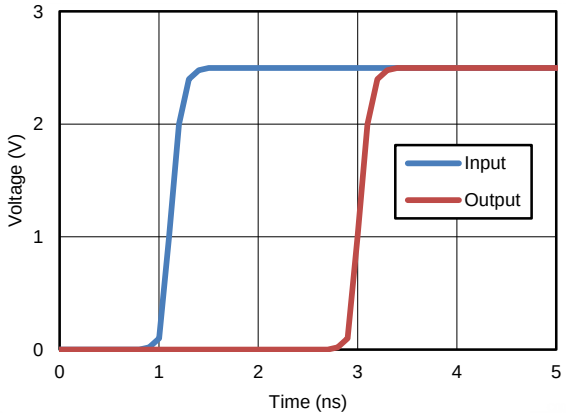

Figure 3. Propagation Delay (t_{pd}) Simulation Result at V_{CC} = 2.5 V

10 Power Supply Recommendations

The power supply can be any voltage between the minimum and maximum supply voltage rating listed in the *Recommended Operating Conditions* table.

Each V_{CC} terminal should have a good bypass capacitor to prevent power disturbance. For devices with a single supply, a 0.1-µF bypass capacitor is recommended. If multiple pins are labeled V_{CC}, then a 0.01-µF or 0.022-µF capacitor is recommended for each V_{CC} because the V_{CC} pins are tied together internally. For devices with dual-supply pins operating at different voltages, for example V_{CC} and V_{DD}, a 0.1-µF bypass capacitor is recommended for each supply pin. To reject different frequencies of noise, use multiple bypass capacitors in parallel. Capacitors with values of 0.1 µF and 1 µF are commonly used in parallel. The bypass capacitor should be installed as close to the power terminal as possible for best results.

Copyright © 1997–2018, Texas Instruments Incorporated

11 Layout

11.1 Layout Guidelines

Reflections and matching are closely related to the loop antenna theory but are different enough to be discussed separately from the theory. When a PCB trace turns a corner at a 90° angle, a reflection can occur. A reflection occurs primarily because of the change of width of the trace. At the apex of the turn, the trace width increases to 1.414 times the width. This increase upsets the transmission-line characteristics, especially the distributed capacitance and self–inductance of the trace which results in the reflection. Not all PCB traces can be straight and therefore some traces must turn corners. Figure 4 shows progressively better techniques of rounding corners. Only the last example (BEST) maintains constant trace width and minimizes reflections.

11.2 Layout Example

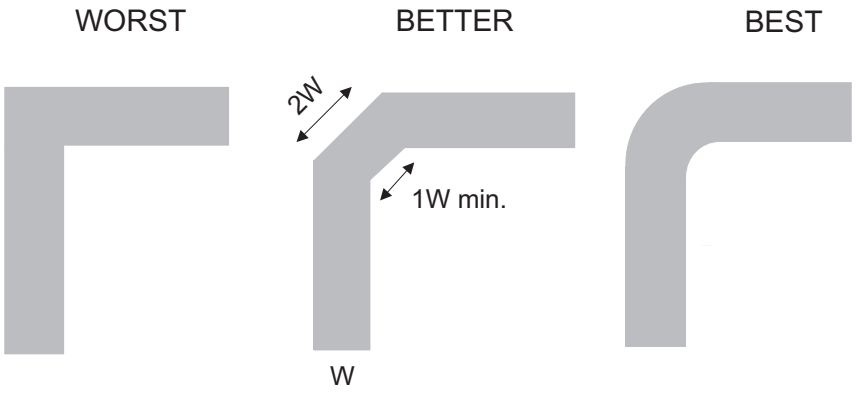

Figure 4. Trace Example

12 器件和文档支持

12.1 文档支持

12.1.1 相关文档

请参阅如下相关文档：

- *《慢速或浮点 CMOS 输入的影响》*，SCBA004
- *《选择合适的德州仪器 (TI) 信号开关》*，SZZA030

12.2 接收文档更新通知

要接收文档更新通知，请导航至 TI.com.cn 上的器件产品文件夹。单击右上角的*通知我* 进行注册，即可每周接收产品信息更改摘要。有关更改的详细信息，请查看任何已修订文档中包含的修订历史记录。

12.3 社区资源

下列链接提供到 TI 社区资源的连接。链接的内容由各个分销商“按照原样”提供。这些内容并不构成 TI 技术规范，并且不一定反映 TI 的观点；请参阅 TI 的 《使用条款》。

TI E2E™ 在线社区 ***TI 的工程师对工程师 (E2E) 社区。*** **此社区的创建目的在于促进工程师之间的协作。在 e2e.ti.com 中，您可以咨询问题、分享知识、拓展思路并与同行工程师一道帮助解决问题。**

设计支持 ***TI 参考设计支持*** **可帮助您快速查找有帮助的 E2E 论坛、设计支持工具以及技术支持的联系信息。**

12.4 商标

E2E is a trademark of Texas Instruments.
All other trademarks are the property of their respective owners.

12.5 静电放电警告



这些装置包含有限的内置 ESD 保护。 存储或装卸时，应将导线一起截短或将装置放置于导电泡棉中，以防止 MOS 门极遭受静电损伤。

12.6 术语表

SLYZ022 — *TI 术语表*。

这份术语表列出并解释术语、缩写和定义。

13 机械、封装和可订购信息

以下页面包含机械、封装和可订购信息。这些信息是指定器件的最新可用数据。数据如有变更，恕不另行通知，且不会对此文档进行修订。如需获取此产品说明书的浏览器版本，请查阅左侧的导航栏。

版权 © 1997–2018, Texas Instruments Incorporated

PACKAGING INFORMATION

Orderable Device	Status (1)	Package Type	Package Drawing	Pins	Package Qty	Eco Plan (2)	Lead finish/ Ball material (6)	MSL Peak Temp (3)	Op Temp (°C)	Device Marking (4/5)	Samples
74CBTLV3257PWRE4	ACTIVE	TSSOP	PW	16	2000	RoHS & Green	NIPDAU	Level-1-260C-UNLIM	-40 to 85	CL257	Samples
74CBTLV3257PWRG4	ACTIVE	TSSOP	PW	16	2000	RoHS & Green	NIPDAU	Level-1-260C-UNLIM	-40 to 85	CL257	Samples
74CBTLV3257RGYRG4	ACTIVE	VQFN	RGY	16	3000	RoHS & Green	NIPDAU	Level-2-260C-1 YEAR	-40 to 85	CL257	Samples
SN74CBTLV3257D	ACTIVE	SOIC	D	16	40	RoHS & Green	NIPDAU	Level-1-260C-UNLIM	-40 to 85	CBTLV3257	Samples
SN74CBTLV3257DBQR	ACTIVE	SSOP	DBQ	16	2500	RoHS & Green	NIPDAU	Level-2-260C-1 YEAR	-40 to 85	CL257	Samples
SN74CBTLV3257DE4	ACTIVE	SOIC	D	16	40	RoHS & Green	NIPDAU	Level-1-260C-UNLIM	-40 to 85	CBTLV3257	Samples
SN74CBTLV3257DGVR	ACTIVE	TVSOP	DGV	16	2000	RoHS & Green	NIPDAU	Level-1-260C-UNLIM	-40 to 85	CL257	Samples
SN74CBTLV3257DR	ACTIVE	SOIC	D	16	2500	RoHS & Green	NIPDAU	Level-1-260C-UNLIM	-40 to 85	CBTLV3257	Samples
SN74CBTLV3257DRE4	ACTIVE	SOIC	D	16	2500	RoHS & Green	NIPDAU	Level-1-260C-UNLIM	-40 to 85	CBTLV3257	Samples
SN74CBTLV3257PW	ACTIVE	TSSOP	PW	16	90	RoHS & Green	NIPDAU	Level-1-260C-UNLIM	-40 to 85	CL257	Samples
SN74CBTLV3257PWE4	ACTIVE	TSSOP	PW	16	90	RoHS & Green	NIPDAU	Level-1-260C-UNLIM	-40 to 85	CL257	Samples
SN74CBTLV3257PWG4	ACTIVE	TSSOP	PW	16	90	RoHS & Green	NIPDAU	Level-1-260C-UNLIM	-40 to 85	CL257	Samples
SN74CBTLV3257PWR	ACTIVE	TSSOP	PW	16	2000	RoHS & Green	NIPDAU | SN	Level-1-260C-UNLIM	-40 to 85	CL257	Samples
SN74CBTLV3257RGYR	ACTIVE	VQFN	RGY	16	3000	RoHS & Green	NIPDAU	Level-2-260C-1 YEAR	-40 to 85	CL257	Samples
SN74CBTLV3257RSVR	ACTIVE	UQFN	RSV	16	3000	RoHS & Green	NIPDAU	Level-1-260C-UNLIM	-40 to 85	ZTR	Samples

(1) The marketing status values are defined as follows:
ACTIVE: Product device recommended for new designs.
LIFEBUY: TI has announced that the device will be discontinued, and a lifetime-buy period is in effect.
NRND: Not recommended for new designs. Device is in production to support existing customers, but TI does not recommend using this part in a new design.
PREVIEW: Device has been announced but is not in production. Samples may or may not be available.
OBSOLETE: TI has discontinued the production of the device.

(2) RoHS: TI defines "RoHS" to mean semiconductor products that are compliant with the current EU RoHS requirements for all 10 RoHS substances, including the requirement that RoHS substance do not exceed 0.1% by weight in homogeneous materials. Where designed to be soldered at high temperatures, "RoHS" products are suitable for use in specified lead-free processes. TI may reference these types of products as "Pb-Free".
RoHS Exempt: TI defines "RoHS Exempt" to mean products that contain lead but are compliant with EU RoHS pursuant to a specific EU RoHS exemption.
Green: TI defines "Green" to mean the content of Chlorine (Cl) and Bromine (Br) based flame retardants meet JS709B low halogen requirements of <=1000ppm threshold. Antimony trioxide based flame retardants must also meet the <=1000ppm threshold requirement.

(3) MSL, Peak Temp. - The Moisture Sensitivity Level rating according to the JEDEC industry standard classifications, and peak solder temperature.

(4) There may be additional marking, which relates to the logo, the lot trace code information, or the environmental category on the device.

(5) Multiple Device Markings will be inside parentheses. Only one Device Marking contained in parentheses and separated by a "~" will appear on a device. If a line is indented then it is a continuation of the previous line and the two combined represent the entire Device Marking for that device.

(6) Lead finish/Ball material - Orderable Devices may have multiple material finish options. Finish options are separated by a vertical ruled line. Lead finish/Ball material values may wrap to two lines if the finish value exceeds the maximum column width.

Important Information and Disclaimer: The information provided on this page represents TI's knowledge and belief as of the date that it is provided. TI bases its knowledge and belief on information provided by third parties, and makes no representation or warranty as to the accuracy of such information. Efforts are underway to better integrate information from third parties. TI has taken and continues to take reasonable steps to provide representative and accurate information but may not have conducted destructive testing or chemical analysis on incoming materials and chemicals. TI and TI suppliers consider certain information to be proprietary, and thus CAS numbers and other limited information may not be available for release.

In no event shall TI's liability arising out of such information exceed the total purchase price of the TI part(s) at issue in this document sold by TI to Customer on an annual basis.

TAPE AND REEL INFORMATION

REEL DIMENSIONS

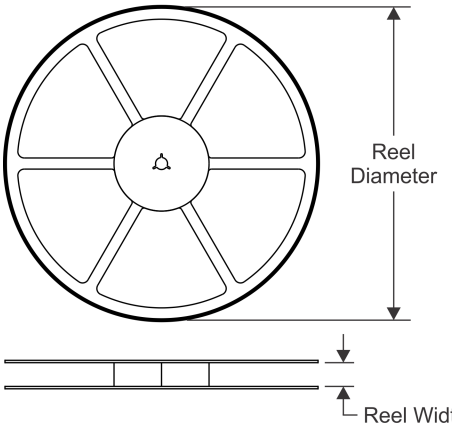

TAPE DIMENSIONS

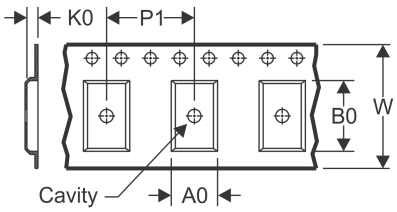

A0	Dimension designed to accommodate the component width
B0	Dimension designed to accommodate the component length
K0	Dimension designed to accommodate the component thickness
W	Overall width of the carrier tape
P1	Pitch between successive cavity centers

QUADRANT ASSIGNMENTS FOR PIN 1 ORIENTATION IN TAPE

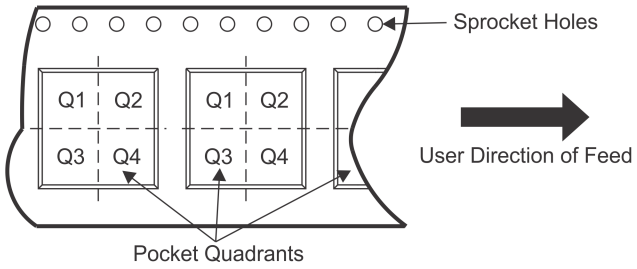

*All dimensions are nominal

Device	Package Type	Package Drawing	Pins	SPQ	Reel Diameter (mm)	Reel Width W1 (mm)	A0 (mm)	B0 (mm)	K0 (mm)	P1 (mm)	W (mm)	Pin1 Quadrant
74CBTLV3257PWRG4	TSSOP	PW	16	2000	330.0	12.4	6.9	5.6	1.6	8.0	12.0	Q1
SN74CBTLV3257DBQR	SSOP	DBQ	16	2500	330.0	12.5	6.4	5.2	2.1	8.0	12.0	Q1
SN74CBTLV3257DGVR	TVSOP	DGV	16	2000	330.0	12.4	6.8	4.0	1.6	8.0	12.0	Q1
SN74CBTLV3257DR	SOIC	D	16	2500	330.0	16.4	6.5	10.3	2.1	8.0	16.0	Q1
SN74CBTLV3257PWR	TSSOP	PW	16	2000	330.0	12.4	6.9	5.6	1.6	8.0	12.0	Q1
SN74CBTLV3257PWR	TSSOP	PW	16	2000	330.0	12.4	6.9	5.6	1.6	8.0	12.0	Q1
SN74CBTLV3257RGYR	VQFN	RGY	16	3000	330.0	12.4	3.8	4.3	1.5	8.0	12.0	Q1
SN74CBTLV3257RSVR	UQFN	RSV	16	3000	180.0	13.2	2.1	2.9	0.75	4.0	12.0	Q1

TAPE AND REEL BOX DIMENSIONS

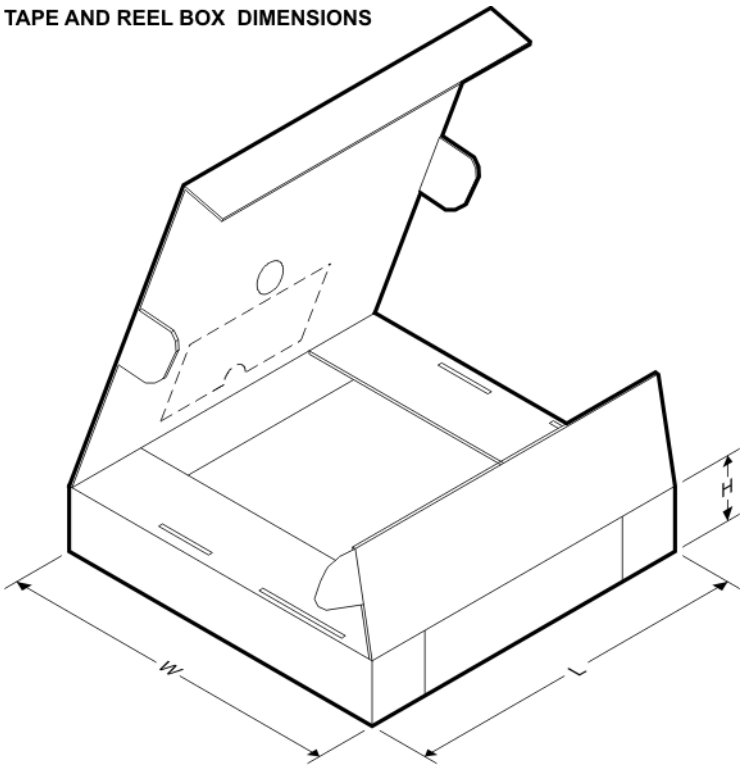

*All dimensions are nominal

Device	Package Type	Package Drawing	Pins	SPQ	Length (mm)	Width (mm)	Height (mm)
74CBTLV3257PWRG4	TSSOP	PW	16	2000	367.0	367.0	35.0
SN74CBTLV3257DBQR	SSOP	DBQ	16	2500	340.5	338.1	20.6
SN74CBTLV3257DGVR	TVSOP	DGV	16	2000	367.0	367.0	35.0
SN74CBTLV3257DR	SOIC	D	16	2500	340.5	336.1	32.0
SN74CBTLV3257PWR	TSSOP	PW	16	2000	367.0	367.0	35.0
SN74CBTLV3257PWR	TSSOP	PW	16	2000	364.0	364.0	27.0
SN74CBTLV3257RGYR	VQFN	RGY	16	3000	367.0	367.0	35.0
SN74CBTLV3257RSVR	UQFN	RSV	16	3000	180.0	180.0	30.0

TUBE

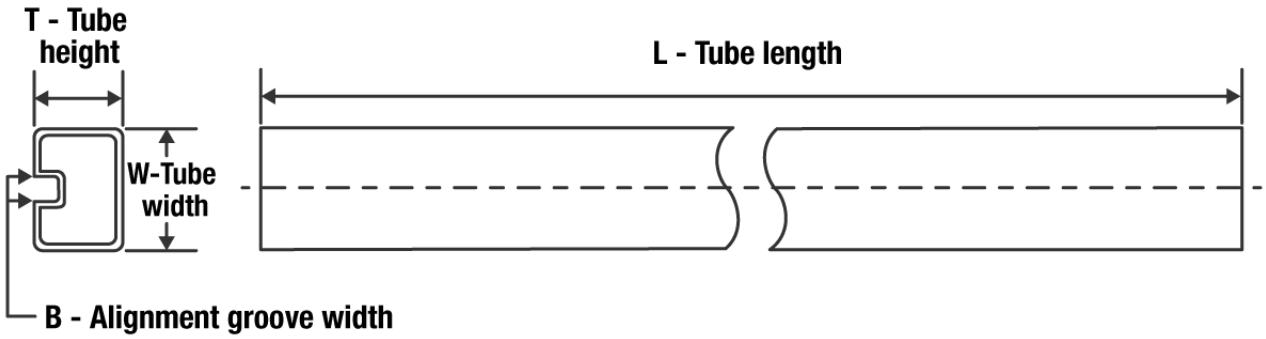

*All dimensions are nominal

Device	Package Name	Package Type	Pins	SPQ	L (mm)	W (mm)	T (µm)	B (mm)
SN74CBTLV3257D	D	SOIC	16	40	507	8	3940	4.32
SN74CBTLV3257DE4	D	SOIC	16	40	507	8	3940	4.32
SN74CBTLV3257PW	PW	TSSOP	16	90	530	10.2	3600	3.5
SN74CBTLV3257PWE4	PW	TSSOP	16	90	530	10.2	3600	3.5
SN74CBTLV3257PWG4	PW	TSSOP	16	90	530	10.2	3600	3.5

D (R–PDSO–G16) PLASTIC SMALL OUTLINE

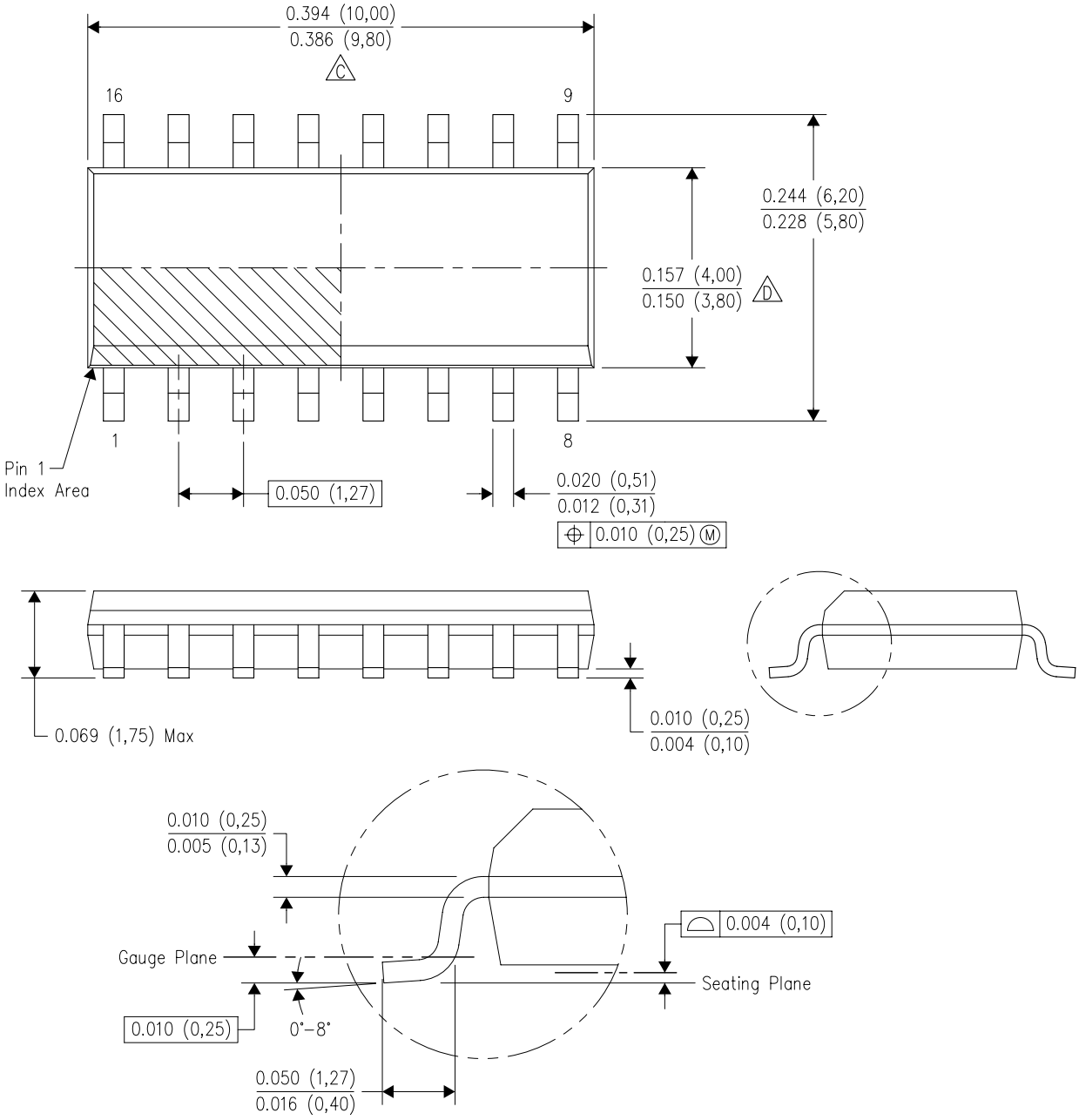

NOTES:
A. All linear dimensions are in inches (millimeters).
B. This drawing is subject to change without notice.
C. Body length does not include mold flash, protrusions, or gate burrs. Mold flash, protrusions, or gate burrs shall not exceed 0.006 (0,15) each side.
D. Body width does not include interlead flash. Interlead flash shall not exceed 0.017 (0,43) each side.
E. Reference JEDEC MS–012 variation AC.

D (R–PDSO–G16) PLASTIC SMALL OUTLINE

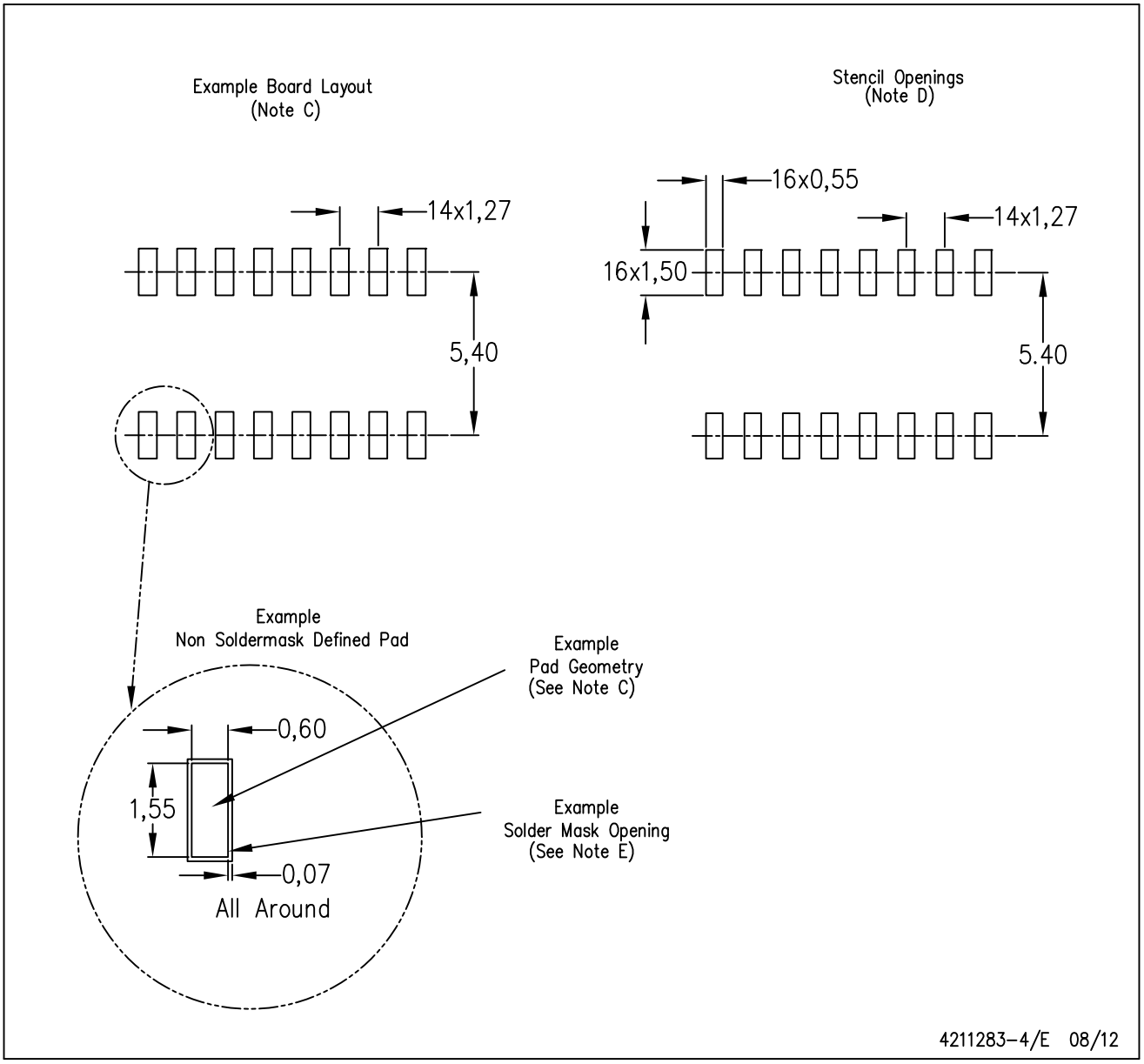

NOTES:
A. All linear dimensions are in millimeters.
B. This drawing is subject to change without notice.
C. Publication IPC–7351 is recommended for alternate designs.
D. Laser cutting apertures with trapezoidal walls and also rounding corners will offer better paste release. Customers should contact their board assembly site for stencil design recommendations. Refer to IPC–7525 for other stencil recommendations.
E. Customers should contact their board fabrication site for solder mask tolerances between and around signal pads.

PACKAGE OUTLINE

PW0016A

TSSOP - 1.2 mm max height

SMALL OUTLINE PACKAGE

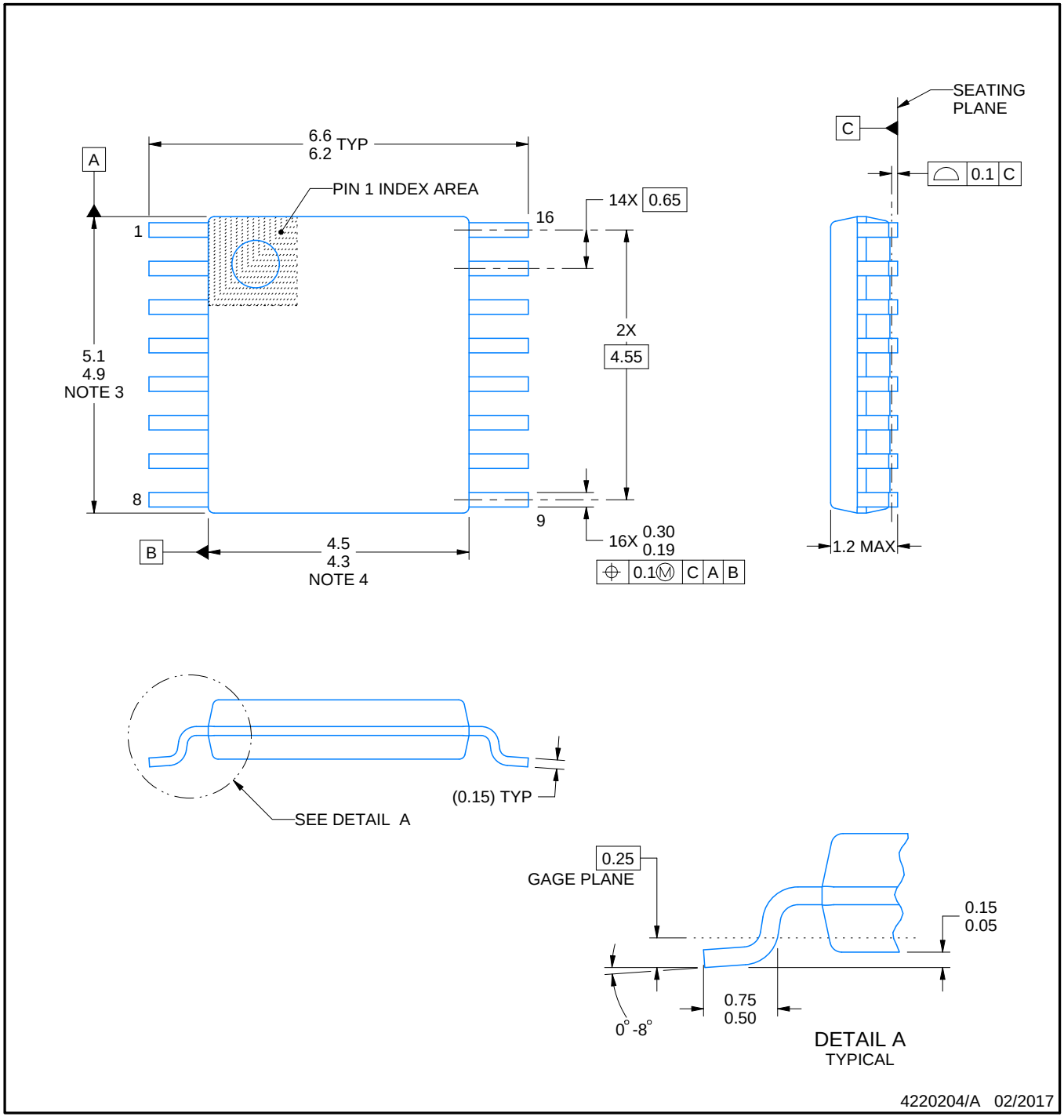

NOTES:

1. All linear dimensions are in millimeters. Any dimensions in parenthesis are for reference only. Dimensioning and tolerancing per ASME Y14.5M.
2. This drawing is subject to change without notice.
3. This dimension does not include mold flash, protrusions, or gate burrs. Mold flash, protrusions, or gate burrs shall not exceed 0.15 mm per side.
4. This dimension does not include interlead flash. Interlead flash shall not exceed 0.25 mm per side.
5. Reference JEDEC registration MO-153.

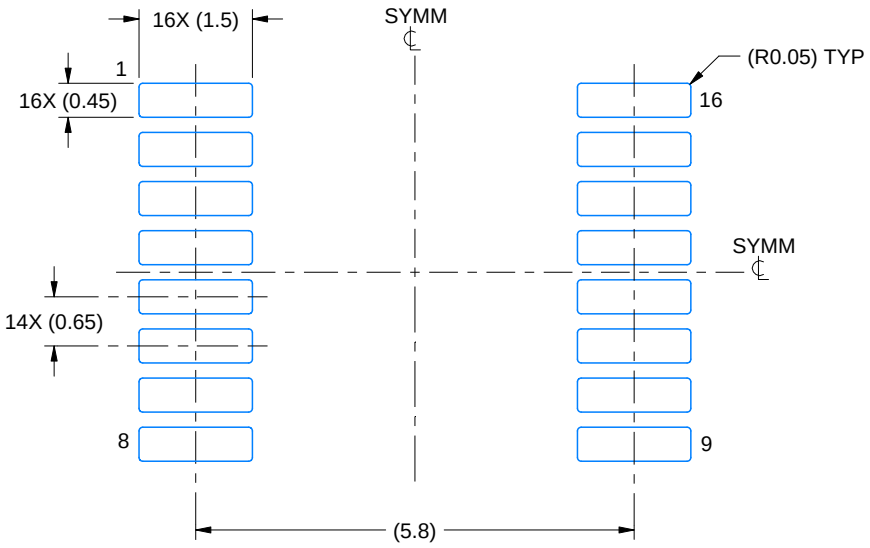

LAND PATTERN EXAMPLE
EXPOSED METAL SHOWN
SCALE: 10X

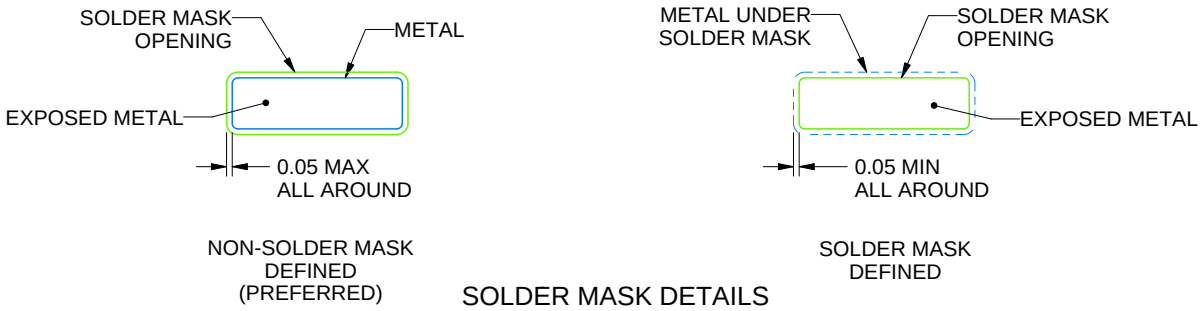

SOLDER MASK DETAILS

4220204/A 02/2017

NOTES: (continued)

6. Publication IPC-7351 may have alternate designs.
7. Solder mask tolerances between and around signal pads can vary based on board fabrication site.

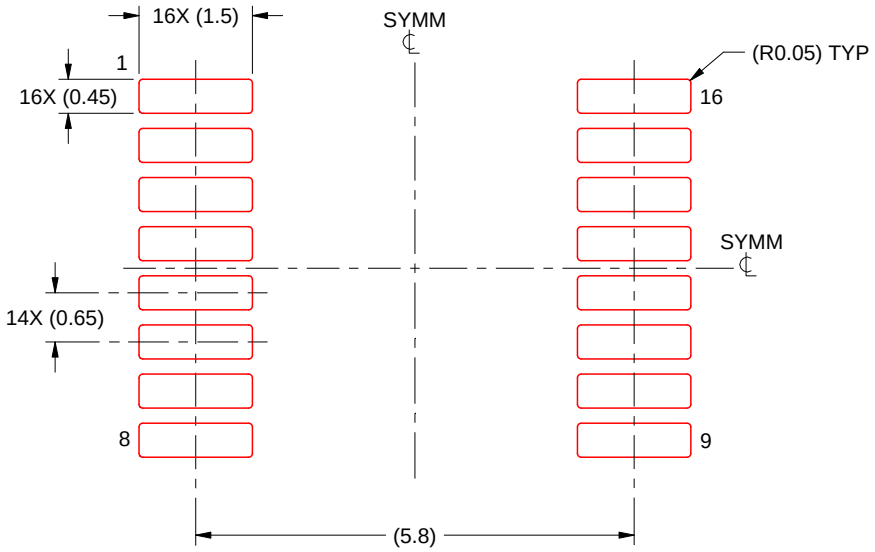

SOLDER PASTE EXAMPLE
BASED ON 0.125 mm THICK STENCIL
SCALE: 10X

4220204/A 02/2017

NOTES: (continued)

8. Laser cutting apertures with trapezoidal walls and rounded corners may offer better paste release. IPC-7525 may have alternate design recommendations.
9. Board assembly site may have different recommendations for stencil design.

DGV (R-PDSO-G)** **PLASTIC SMALL-OUTLINE**

24 PINS SHOWN

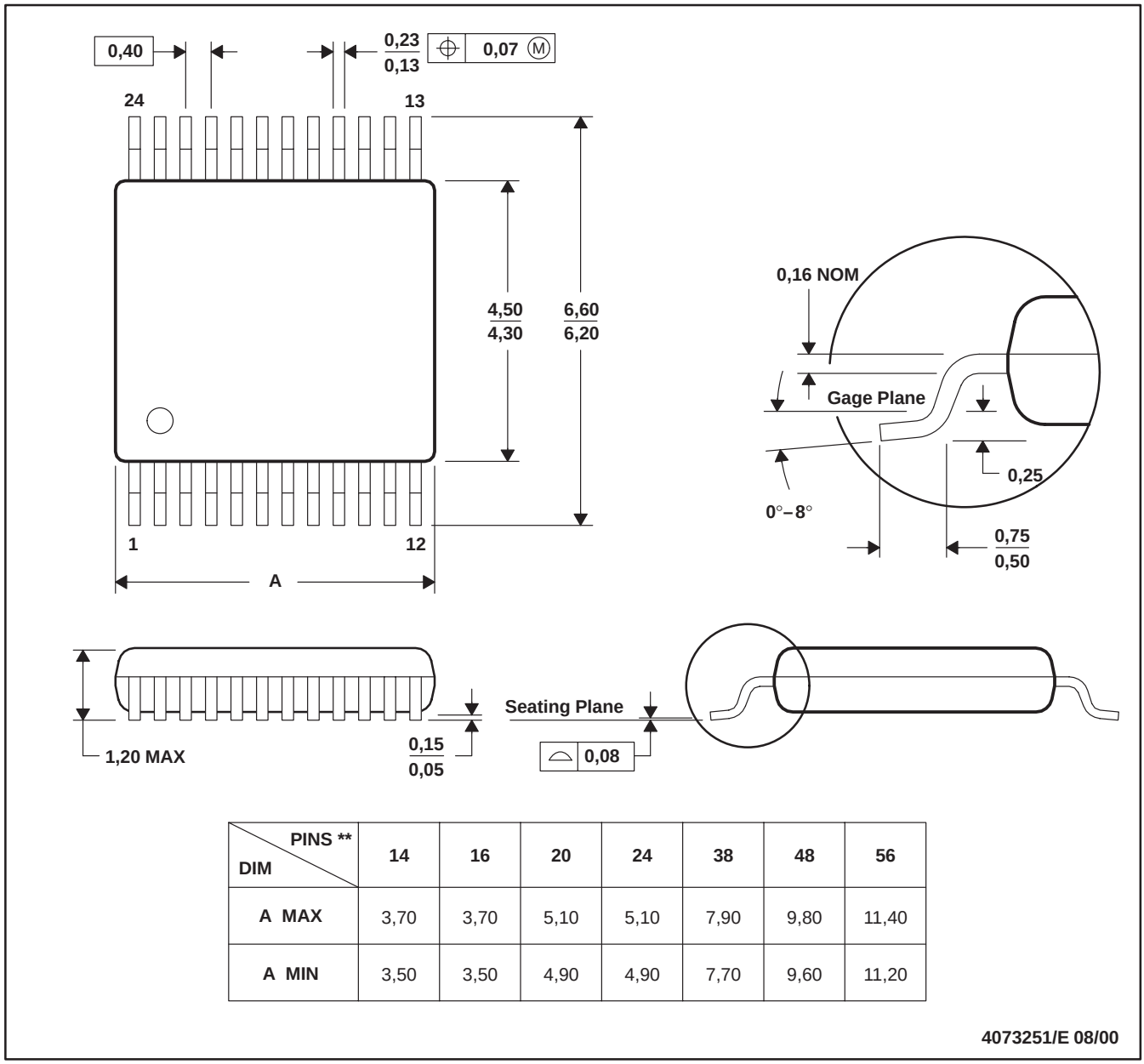

DIM \ PINS **	14	16	20	24	38	48	56
A MAX	3,70	3,70	5,10	5,10	7,90	9,80	11,40
A MIN	3,50	3,50	4,90	4,90	7,70	9,60	11,20

4073251/E 08/00

NOTES: A. All linear dimensions are in millimeters.
B. This drawing is subject to change without notice.
C. Body dimensions do not include mold flash or protrusion, not to exceed 0,15 per side.
D. Falls within JEDEC: 24/48 Pins – MO-153
14/16/20/56 Pins – MO-194

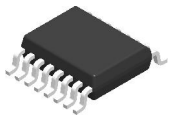

PACKAGE OUTLINE

DBQ0016A

SSOP - 1.75 mm max height

SHRINK SMALL-OUTLINE PACKAGE

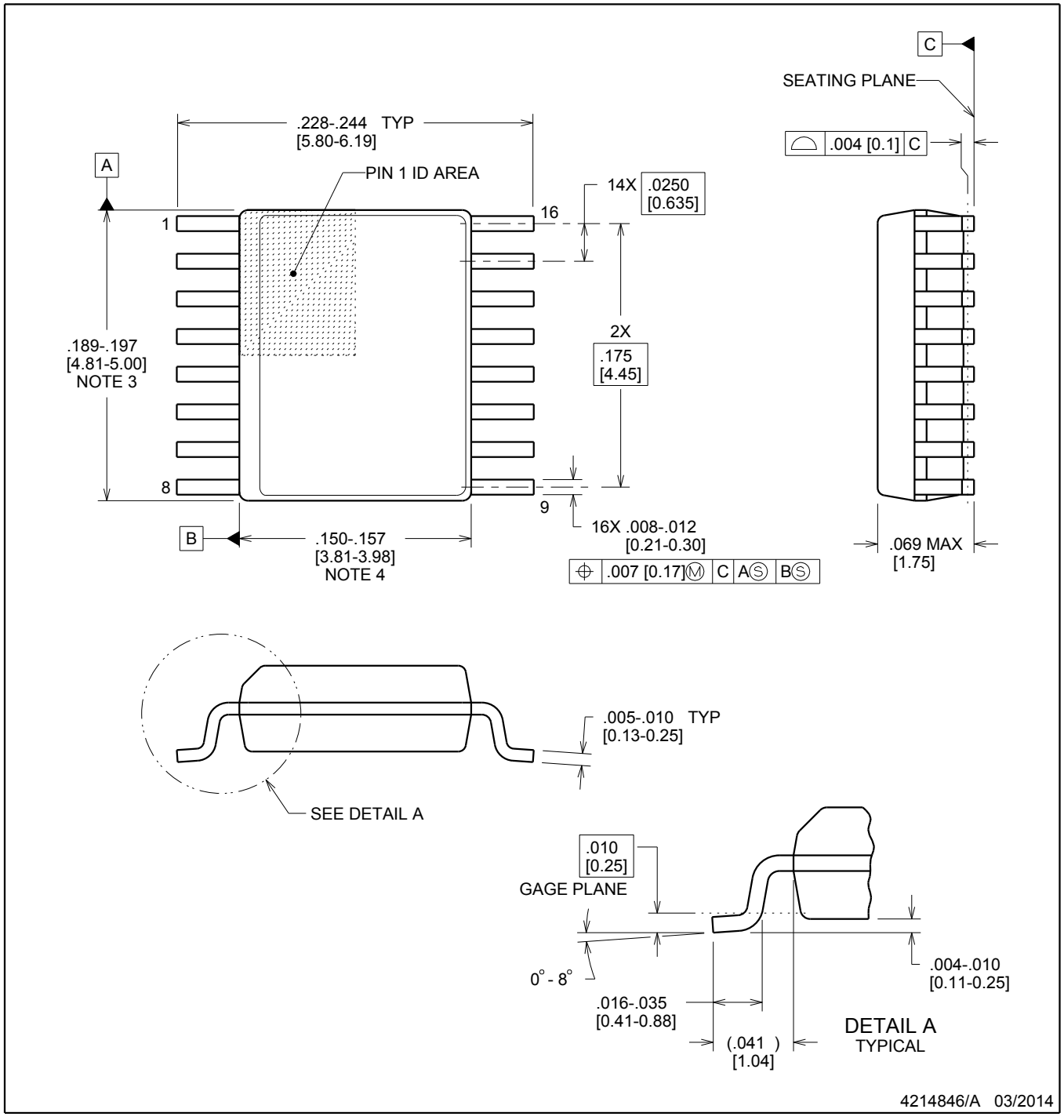

NOTES:

1. Linear dimensions are in inches [millimeters]. Dimensions in parenthesis are for reference only. Controlling dimensions are in inches. Dimensioning and tolerancing per ASME Y14.5M.
2. This drawing is subject to change without notice.
3. This dimension does not include mold flash, protrusions, or gate burrs. Mold flash, protrusions, or gate burrs shall not exceed .006 inch, per side.
4. This dimension does not include interlead flash.
5. Reference JEDEC registration MO-137, variation AB.

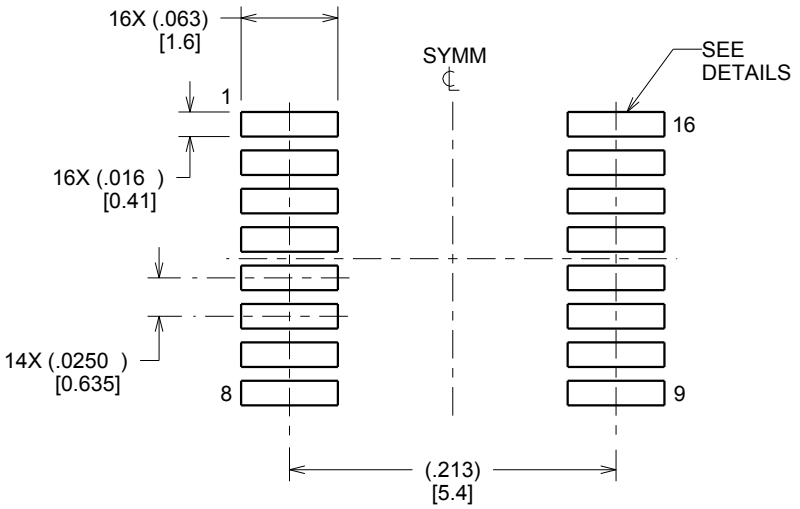

LAND PATTERN EXAMPLE
SCALE:8X

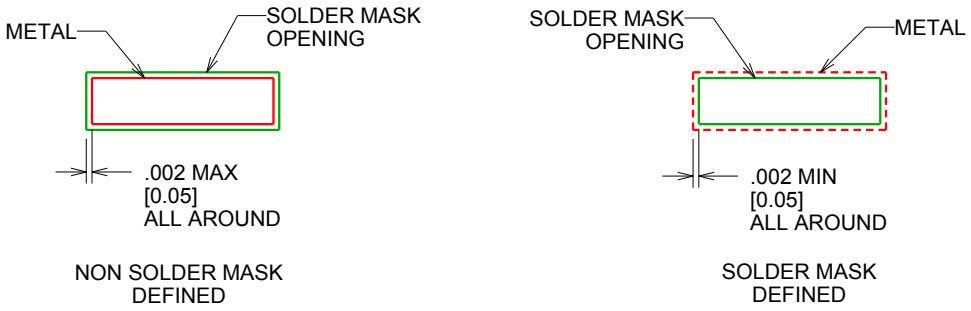

SOLDER MASK DETAILS

4214846/A 03/2014

NOTES: (continued)

6. Publication IPC-7351 may have alternate designs.
7. Solder mask tolerances between and around signal pads can vary based on board fabrication site.

EXAMPLE STENCIL DESIGN

DBQ0016A

SSOP - 1.75 mm max height

SHRINK SMALL-OUTLINE PACKAGE

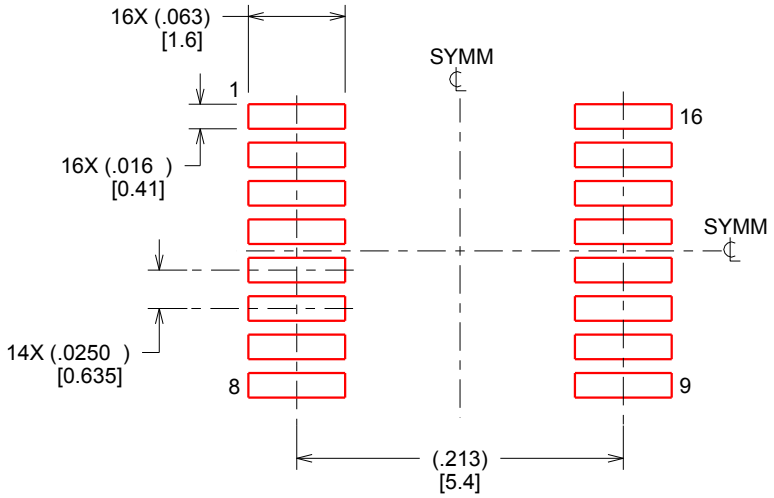

SOLDER PASTE EXAMPLE
BASED ON .005 INCH [0.127 MM] THICK STENCIL
SCALE:8X

4214846/A 03/2014

NOTES: (continued)

8. Laser cutting apertures with trapezoidal walls and rounded corners may offer better paste release. IPC-7525 may have alternate design recommendations.
9. Board assembly site may have different recommendations for stencil design.

RGY (R–PVQFN–N16) PLASTIC QUAD FLATPACK NO–LEAD

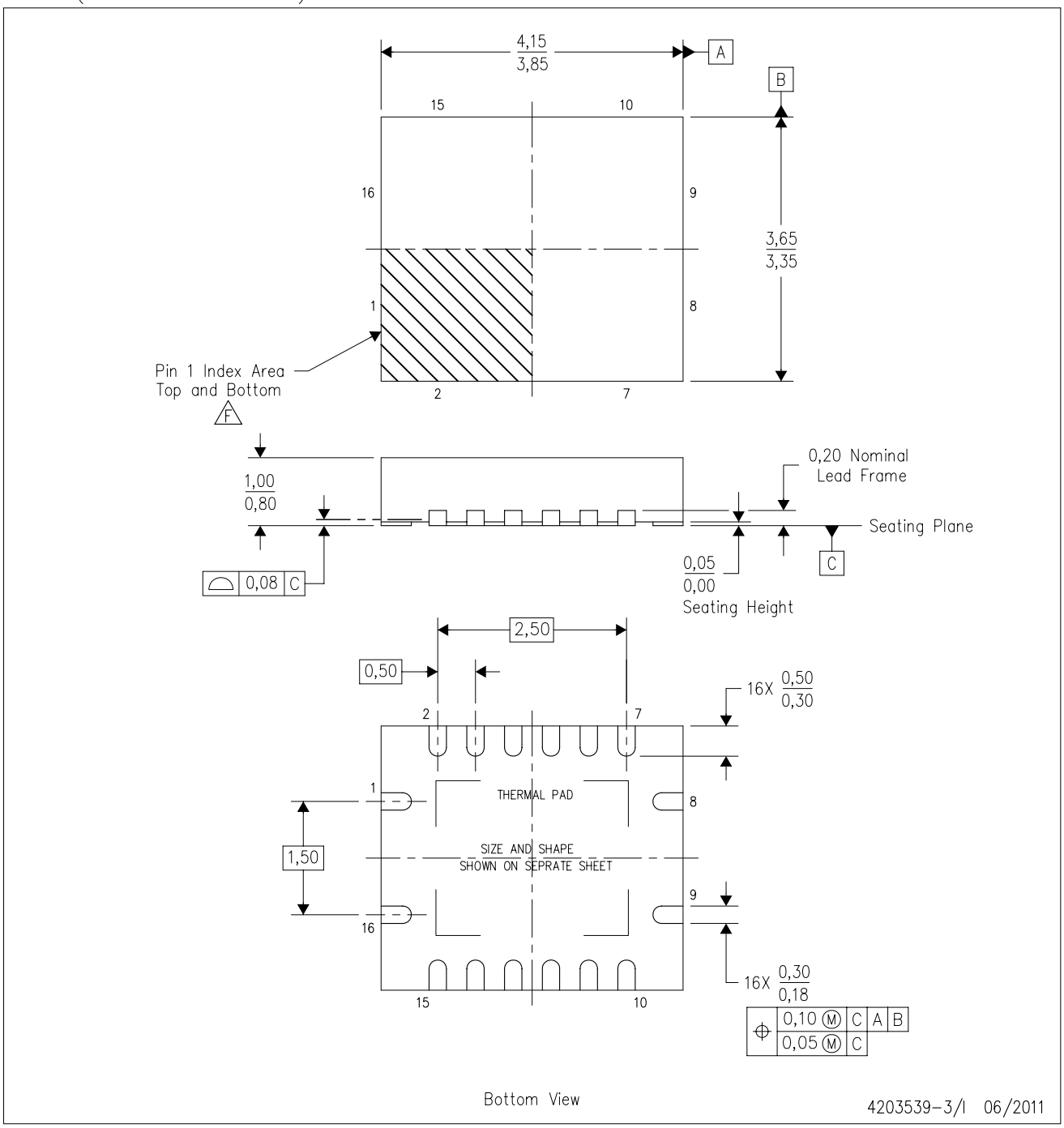

NOTES:
A. All linear dimensions are in millimeters. Dimensioning and tolerancing per ASME Y14.5M–1994.
B. This drawing is subject to change without notice.
C. QFN (Quad Flatpack No–Lead) package configuration.
D. The package thermal pad must be soldered to the board for thermal and mechanical performance.
E. See the additional figure in the Product Data Sheet for details regarding the exposed thermal pad features and dimensions.
F. Pin 1 identifiers are located on both top and bottom of the package and within the zone indicated. The Pin 1 identifiers are either a molded, marked, or metal feature.
G. Package complies to JEDEC MO–241 variation BA.

RGY (R–PVQFN–N16) PLASTIC QUAD FLATPACK NO–LEAD

THERMAL INFORMATION

This package incorporates an exposed thermal pad that is designed to be attached directly to an external heatsink. The thermal pad must be soldered directly to the printed circuit board (PCB). After soldering, the PCB can be used as a heatsink. In addition, through the use of thermal vias, the thermal pad can be attached directly to the appropriate copper plane shown in the electrical schematic for the device, or alternatively, can be attached to a special heatsink structure designed into the PCB. This design optimizes the heat transfer from the integrated circuit (IC).

For information on the Quad Flatpack No–Lead (QFN) package and its advantages, refer to Application Report, QFN/SON PCB Attachment, Texas Instruments Literature No. SLUA271. This document is available at www.ti.com.

The exposed thermal pad dimensions for this package are shown in the following illustration.

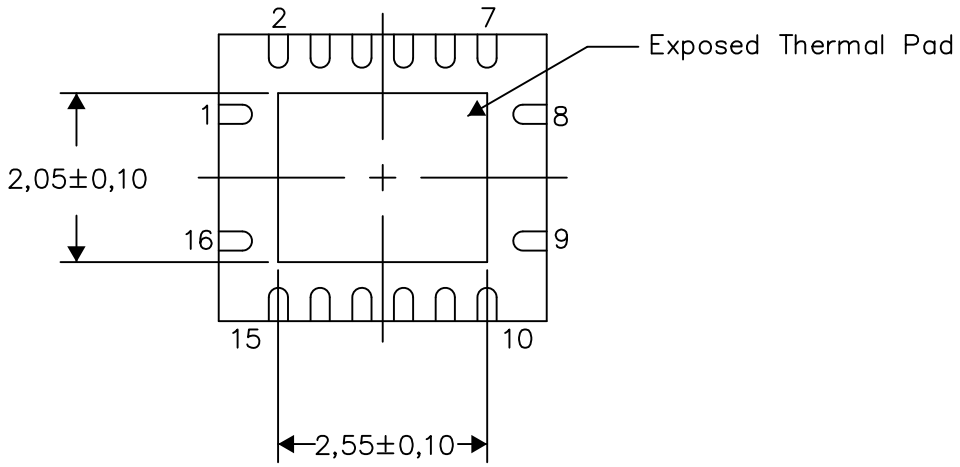

Bottom View

Exposed Thermal Pad Dimensions

4206353–3/P 03/14

NOTE: All linear dimensions are in millimeters

RGY (R–PVQFN–N16) PLASTIC QUAD FLATPACK NO–LEAD

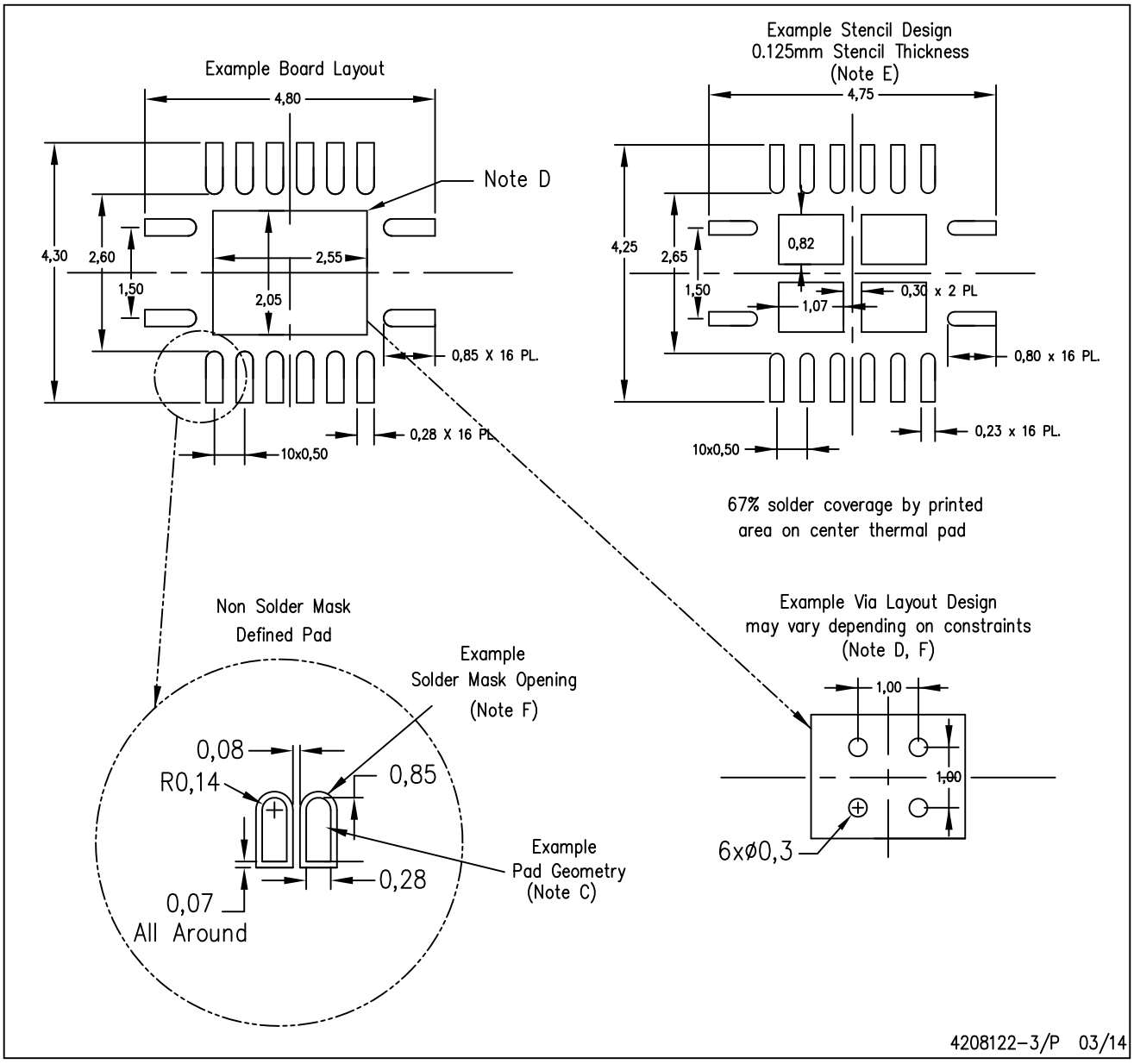

NOTES:
A. All linear dimensions are in millimeters.
B. This drawing is subject to change without notice.
C. Publication IPC–7351 is recommended for alternate designs.
D. This package is designed to be soldered to a thermal pad on the board. Refer to Application Note, Quad Flat–Pack QFN/SON PCB Attachment, Texas Instruments Literature No. SLUA271, and also the Product Data Sheets for specific thermal information, via requirements, and recommended board layout. These documents are available at www.ti.com <http: //www.ti.com>.
E. Laser cutting apertures with trapezoidal walls and also rounding corners will offer better paste release. Customers should contact their board assembly site for stencil design recommendations. Refer to IPC 7525 for stencil design considerations.
F. Customers should contact their board fabrication site for minimum solder mask web tolerances between signal pads.

RSV0016A

PACKAGE OUTLINE

UQFN - 0.55 mm max height

ULTRA THIN QUAD FLATPACK - NO LEAD

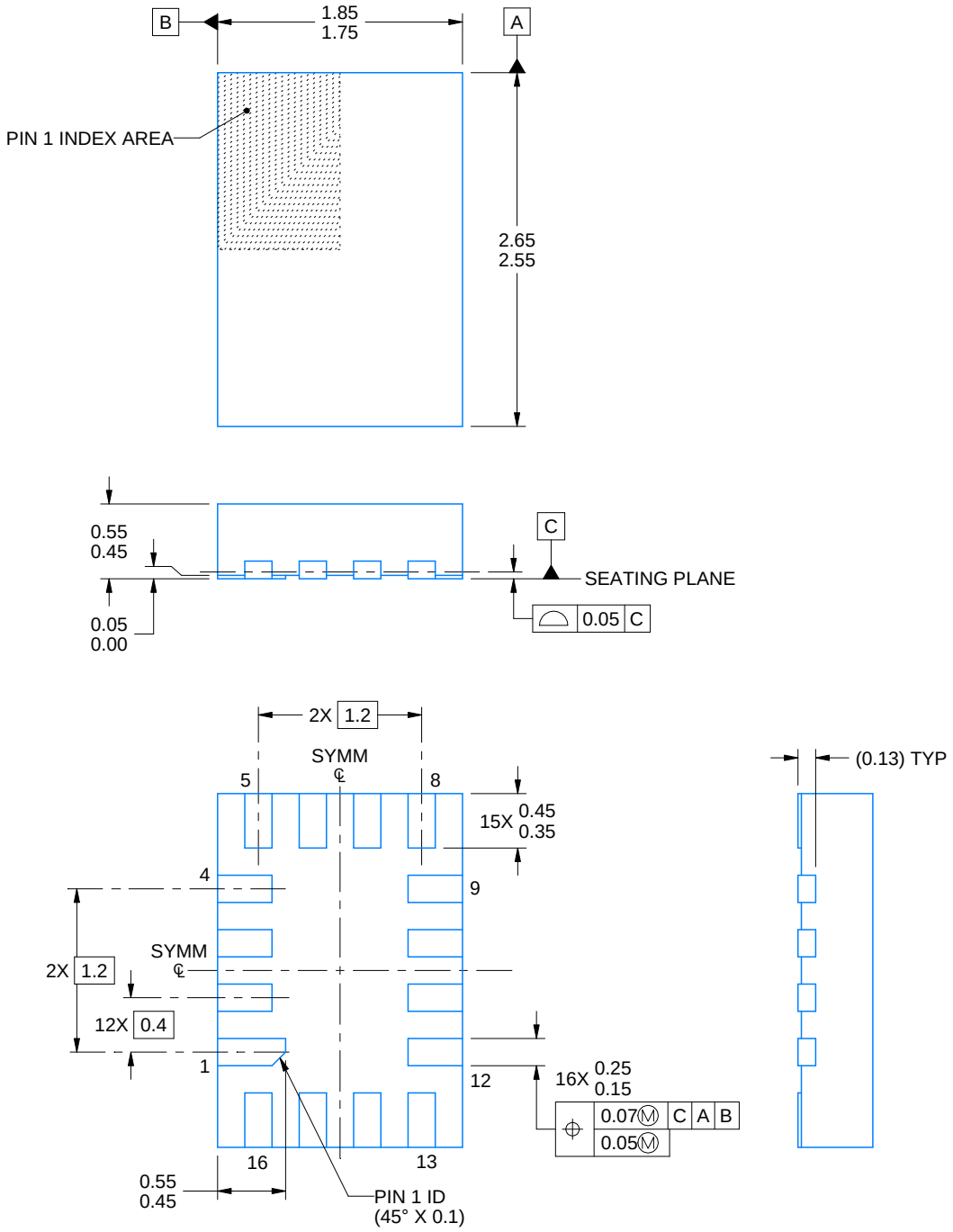

NOTES:

1. All linear dimensions are in millimeters. Any dimensions in parenthesis are for reference only. Dimensioning and tolerancing per ASME Y14.5M.
2. This drawing is subject to change without notice.

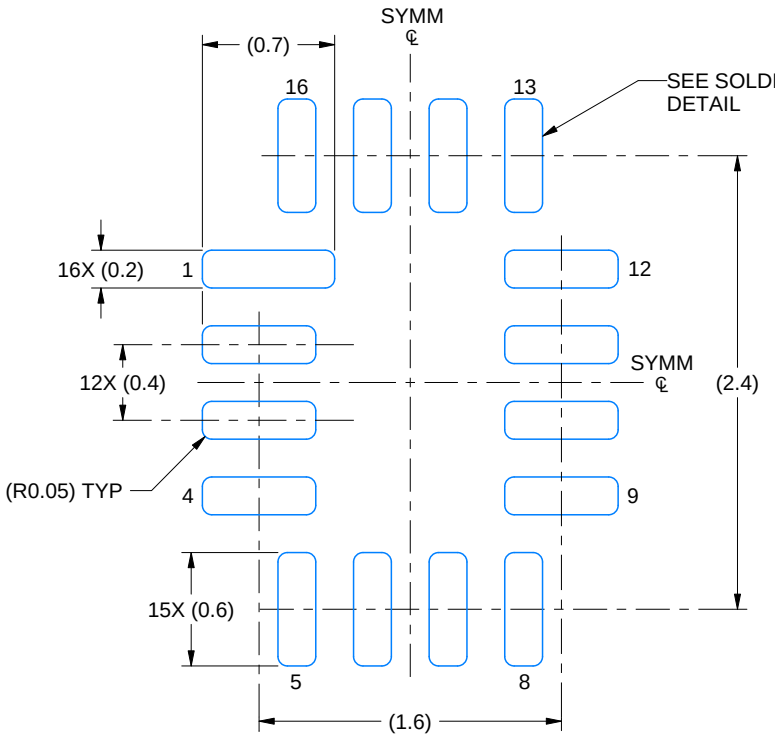

LAND PATTERN EXAMPLE
EXPOSED METAL SHOWN
SCALE: 25X

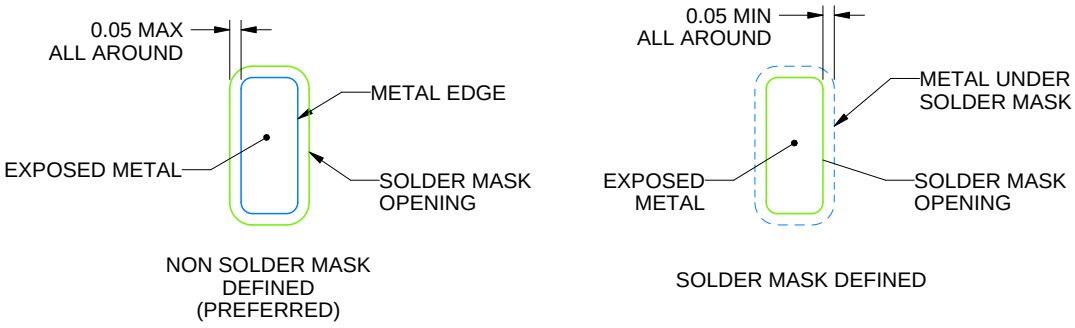

SOLDER MASK DETAILS

4220314/C 02/2020

NOTES: (continued)

3. For more information, see Texas Instruments literature number SLUA271 (www.ti.com/lit/slua271).

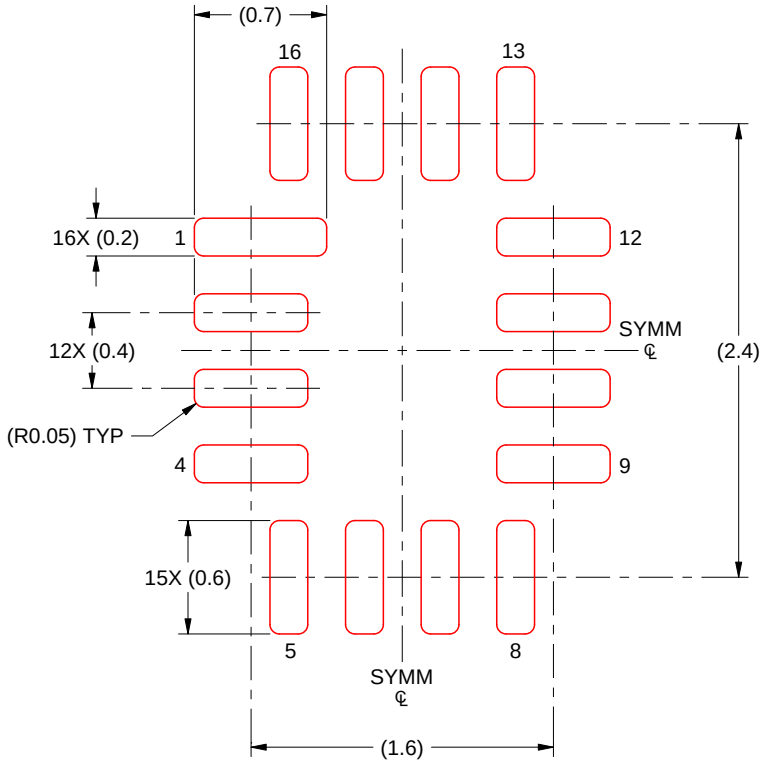

SOLDER PASTE EXAMPLE
BASED ON 0.125 MM THICK STENCIL
SCALE: 25X

4220314/C 02/2020

NOTES: (continued)

4. Laser cutting apertures with trapezoidal walls and rounded corners may offer better paste release. IPC-7525 may have alternate design recommendations.

重要声明和免责声明

TI“按原样”提供技术和可靠性数据（包括数据表）、设计资源（包括参考设计）、应用或其他设计建议、网络工具、安全信息和其他资源，不保证没有瑕疵且不做出任何明示或暗示的担保，包括但不限于对适销性、某特定用途方面的适用性或不侵犯任何第三方知识产权的暗示担保。

这些资源可供使用 TI 产品进行设计的熟练开发人员使用。您将自行承担以下全部责任：(1) 针对您的应用选择合适的 TI 产品，(2) 设计、验证并测试您的应用，(3) 确保您的应用满足相应标准以及任何其他功能安全、信息安全、监管或其他要求。

这些资源如有变更，恕不另行通知。TI 授权您仅可将这些资源用于研发本资源所述的 TI 产品的应用。严禁对这些资源进行其他复制或展示。您无权使用任何其他 TI 知识产权或任何第三方知识产权。您应全额赔偿因在这些资源的使用中对 TI 及其代表造成的任何索赔、损害、成本、损失和债务，TI 对此概不负责。

TI 提供的产品受 TI 的销售条款或 ti.com 上其他适用条款/TI 产品随附的其他适用条款的约束。TI 提供这些资源并不会扩展或以其他方式更改 TI 针对 TI 产品发布的适用的担保或担保免责声明。

TI 反对并拒绝您可能提出的任何其他或不同的条款。

邮寄地址：Texas Instruments, Post Office Box 655303, Dallas, Texas 75265
Copyright © 2022，德州仪器 (TI) 公司