CCD ANALOG FRONT-END FOR DIGITAL CAMERAS

Check for Samples: VSP2560, VSP2562, VSP2566

FEATURES

- **CCD Signal Processing:**
  - **36-MHz Correlated Double Sampling (CDS)**
- **Output Resolution:**
  - **VSP2560 (10-Bit)**
  - **VSP2562 (12-Bit)**
  - **VSP2566 (16-Bit)**
- **16-Bit Analog-to-Digital Conversion:**
  - **36-MHz Conversion Rate**
  - **No Missing Codes Ensured**
- **80-dB Input-Referred SNR (at Gain = 12 dB)**
- **Programmable Black Level Clamping**
- **Programmable Gain Amp (PGA):**
  - **–9 dB to +44 dB**
  - **–3 dB to +18 dB (Analog Front Gain)**
  - **–6 dB to +26 dB (Digital Gain)**
- **Portable Operation:**
  - **Low Voltage: 2.7 V to 3.6 V**
  - **Low Power: 86 mW at 3.0 V, 36 MHz**
  - **Low Power: 6 mW (Standby Mode)**
- **Two-Channel, General-Purpose, 8-Bit DAC**
- **QFP-48 Package**

DESCRIPTION

The VSP2560/62/66 are a family of complete mixed-signal processing ICs for digital cameras that provide correlated double sampling (CDS) and analog-to-digital conversion for the output of CCD arrays. The CDS extracts the pixel video information from the CCD signal, and the analog-to-digital converter (ADC) converts the digital signal. For varying illumination conditions, a very stable gain control of –9 dB to 44 dB is provided. The gain control is linear in dB. Input signal clamping and offset correction of the input CDS are also provided.

Offset correction is performed by the optical black (OB) level calibration loop, and is held in calibrated black level clamping for an accurate black level reference. Additionally, the black level is quickly recovered after gain changes. The VSP2560/62/66 are available in LQFP-48 packages and operate from single +3 V supplies.

PRODUCT PREVIEW

Table 1. FEATURE COMPARISON BY DEVICE

DEVICE	RESOLUTION (Bits)	TRANSFER CHARACTERISTICS (LSB)		OB CLAMP LOOP (LSB)		
		DNL	INL	PROGRAMMABLE RANGE	OBCLP LEVEL	OB LEVEL
VSP2560	10	±0.5	±1	16 to 78	32	2
VSP2562	12	±0.5	±2	64 to 312	128	8
VSP2566	16	±2	±32	1024 to 4992	2048	128

Please be aware that an important notice concerning availability, standard warranty, and use in critical applications of Texas Instruments semiconductor products and disclaimers thereto appears at the end of this data sheet.
All trademarks are the property of their respective owners.

PRODUCT PREVIEW information concerns products in the formative or design phase of development. Characteristic data and other specifications are design goals. Texas Instruments reserves the right to change or discontinue these products without notice.

Copyright © 2008, Texas Instruments Incorporated

PACKAGING INFORMATION

Orderable Device	Status (1)	Package Type	Package Drawing	Pins	Package Qty	Eco Plan (2)	Lead finish/ Ball material (6)	MSL Peak Temp (3)	Op Temp (°C)	Device Marking (4/5)	Samples
VSP2560PTR	ACTIVE	LQFP	PT	48	1000	RoHS & Green	NIPDAU	Level-1-260C-UNLIM	-40 to 85	VSP2560	Samples
VSP2562PT	ACTIVE	LQFP	PT	48	250	RoHS & Green	NIPDAU	Level-1-260C-UNLIM	-25 to 85	VSP2562	Samples
VSP2566PT	ACTIVE	LQFP	PT	48	250	RoHS & Green	NIPDAU	Level-1-260C-UNLIM	-25 to 85	VSP2566	Samples

(1) The marketing status values are defined as follows:
ACTIVE: Product device recommended for new designs.
LIFEBUY: TI has announced that the device will be discontinued, and a lifetime-buy period is in effect.
NRND: Not recommended for new designs. Device is in production to support existing customers, but TI does not recommend using this part in a new design.
PREVIEW: Device has been announced but is not in production. Samples may or may not be available.
OBSOLETE: TI has discontinued the production of the device.

(2) **RoHS:** TI defines "RoHS" to mean semiconductor products that are compliant with the current EU RoHS requirements for all 10 RoHS substances, including the requirement that RoHS substance do not exceed 0.1% by weight in homogeneous materials. Where designed to be soldered at high temperatures, "RoHS" products are suitable for use in specified lead-free processes. TI may reference these types of products as "Pb-Free".
RoHS Exempt: TI defines "RoHS Exempt" to mean products that contain lead but are compliant with EU RoHS pursuant to a specific EU RoHS exemption.
Green: TI defines "Green" to mean the content of Chlorine (Cl) and Bromine (Br) based flame retardants meet JS709B low halogen requirements of <=1000ppm threshold. Antimony trioxide based flame retardants must also meet the <=1000ppm threshold requirement.

(3) MSL, Peak Temp. - The Moisture Sensitivity Level rating according to the JEDEC industry standard classifications, and peak solder temperature.

(4) There may be additional marking, which relates to the logo, the lot trace code information, or the environmental category on the device.

(5) Multiple Device Markings will be inside parentheses. Only one Device Marking contained in parentheses and separated by a "~" will appear on a device. If a line is indented then it is a continuation of the previous line and the two combined represent the entire Device Marking for that device.

(6) Lead finish/Ball material - Orderable Devices may have multiple material finish options. Finish options are separated by a vertical ruled line. Lead finish/Ball material values may wrap to two lines if the finish value exceeds the maximum column width.

Important Information and Disclaimer: The information provided on this page represents TI's knowledge and belief as of the date that it is provided. TI bases its knowledge and belief on information provided by third parties, and makes no representation or warranty as to the accuracy of such information. Efforts are underway to better integrate information from third parties. TI has taken and continues to take reasonable steps to provide representative and accurate information but may not have conducted destructive testing or chemical analysis on incoming materials and chemicals. TI and TI suppliers consider certain information to be proprietary, and thus CAS numbers and other limited information may not be available for release.

In no event shall TI's liability arising out of such information exceed the total purchase price of the TI part(s) at issue in this document sold by TI to Customer on an annual basis.

TAPE AND REEL INFORMATION

REEL DIMENSIONS

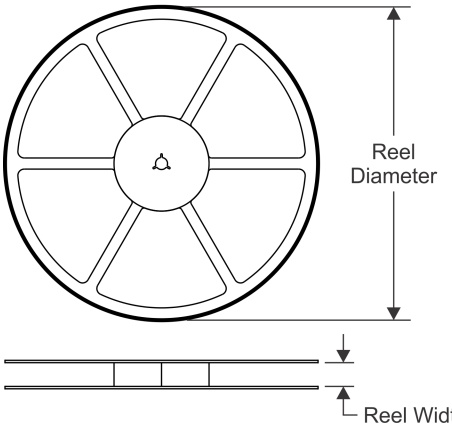

TAPE DIMENSIONS

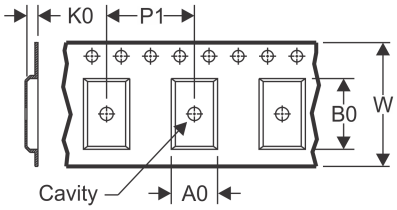

A0	Dimension designed to accommodate the component width
B0	Dimension designed to accommodate the component length
K0	Dimension designed to accommodate the component thickness
W	Overall width of the carrier tape
P1	Pitch between successive cavity centers

QUADRANT ASSIGNMENTS FOR PIN 1 ORIENTATION IN TAPE

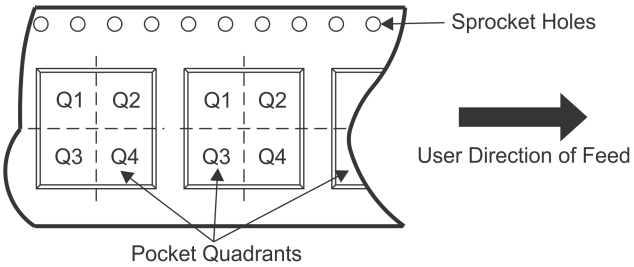

*All dimensions are nominal

Device	Package Type	Package Drawing	Pins	SPQ	Reel Diameter (mm)	Reel Width W1 (mm)	A0 (mm)	B0 (mm)	K0 (mm)	P1 (mm)	W (mm)	Pin1 Quadrant
VSP2560PTR	LQFP	PT	48	1000	330.0	17.4	9.5	9.5	2.0	12.0	16.0	Q2

TAPE AND REEL BOX DIMENSIONS

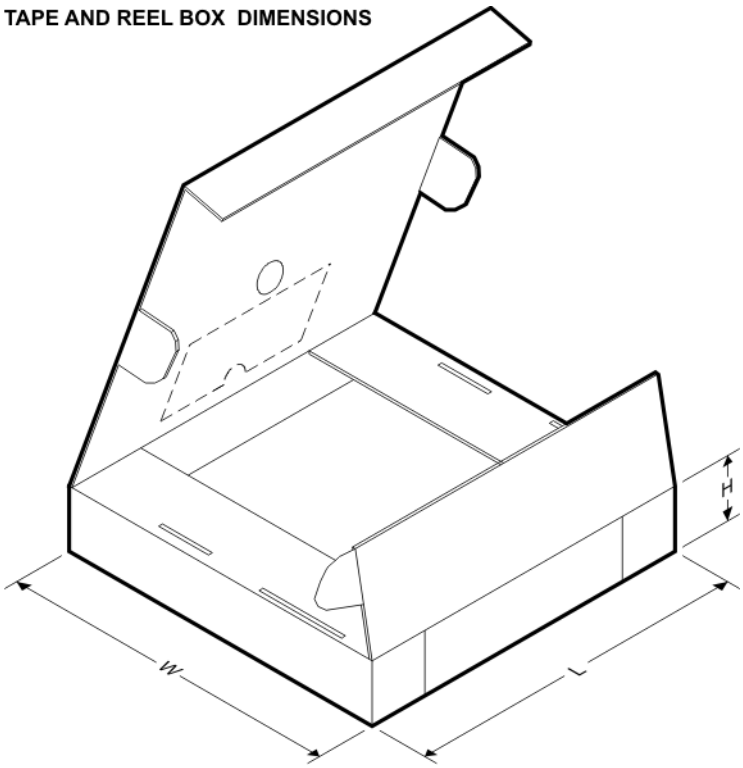

*All dimensions are nominal

Device	Package Type	Package Drawing	Pins	SPQ	Length (mm)	Width (mm)	Height (mm)
VSP2560PTR	LQFP	PT	48	1000	333.2	345.9	28.6

TRAY

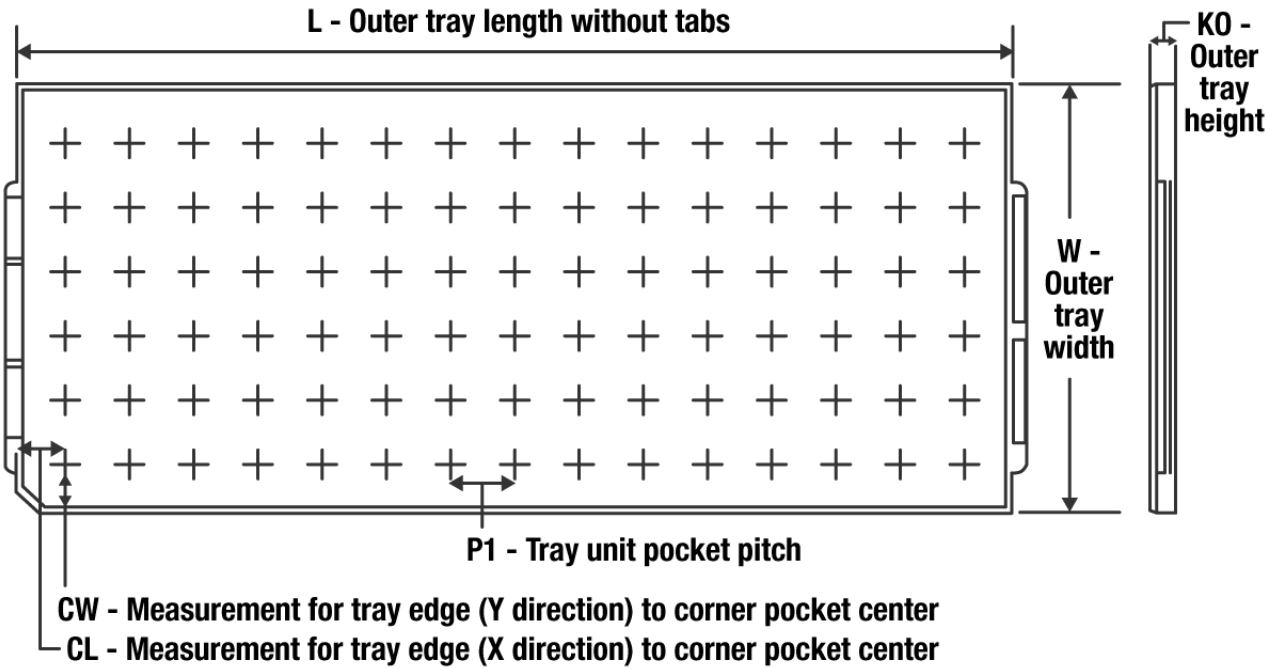

Chamfer on Tray corner indicates Pin 1 orientation of packed units.

*All dimensions are nominal

Device	Package Name	Package Type	Pins	SPQ	Unit array matrix	Max temperature (°C)	L (mm)	W (mm)	K0 (µm)	P1 (mm)	CL (mm)	CW (mm)
VSP2562PT	PT	LQFP	48	250	10x25	150	315	135.9	7.62	12.2	11.1	11.25
VSP2566PT	PT	LQFP	48	250	10x25	150	315	135.9	7.62	12.2	11.1	11.25

PT (S-PQFP-G48) **PLASTIC QUAD FLATPACK**

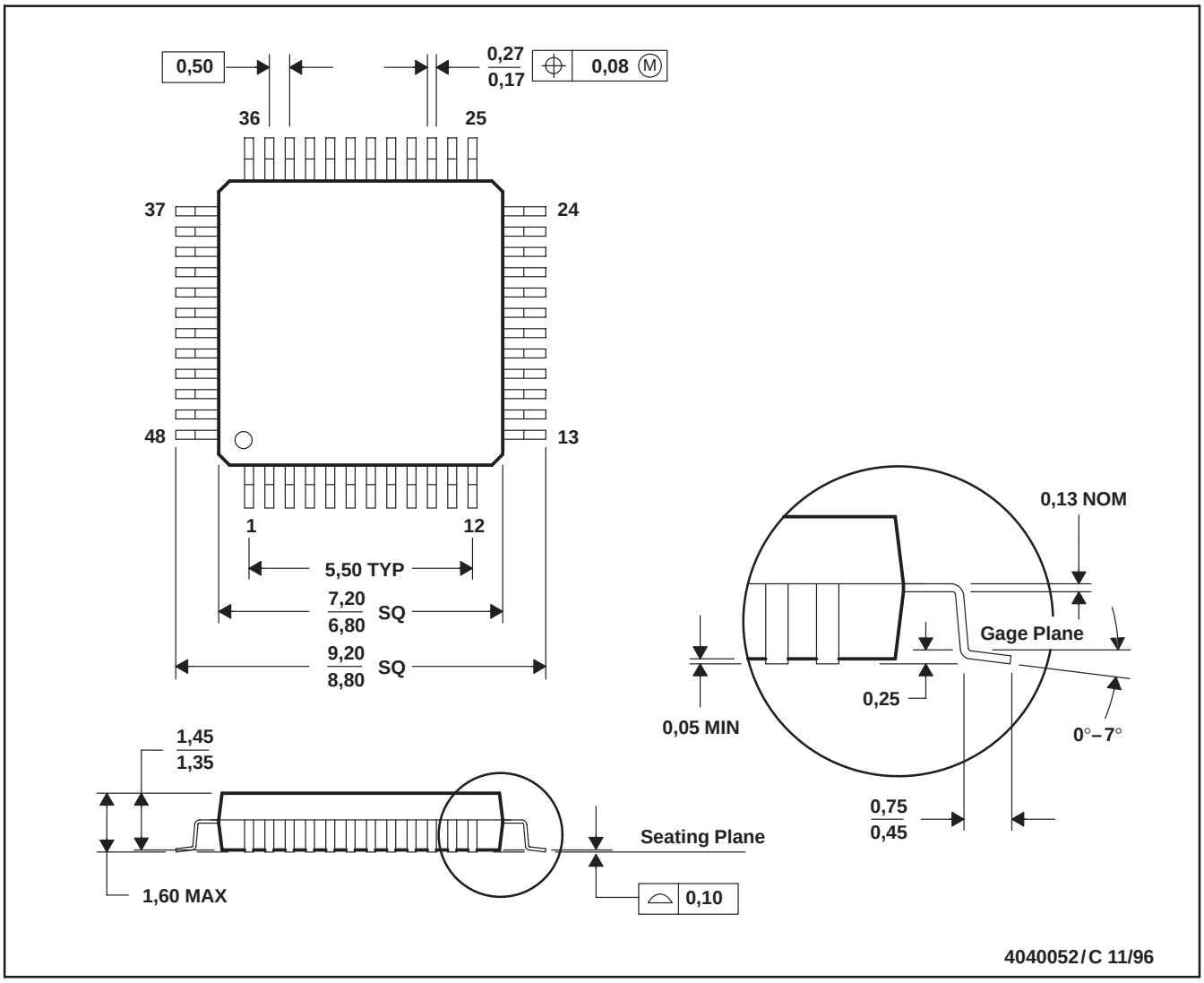

NOTES: A. All linear dimensions are in millimeters.
B. This drawing is subject to change without notice.
C. Falls within JEDEC MS-026
D. This may also be a thermally enhanced plastic package with leads conected to the die pads.

IMPORTANT NOTICE AND DISCLAIMER

TI PROVIDES TECHNICAL AND RELIABILITY DATA (INCLUDING DATA SHEETS), DESIGN RESOURCES (INCLUDING REFERENCE DESIGNS), APPLICATION OR OTHER DESIGN ADVICE, WEB TOOLS, SAFETY INFORMATION, AND OTHER RESOURCES “AS IS” AND WITH ALL FAULTS, AND DISCLAIMS ALL WARRANTIES, EXPRESS AND IMPLIED, INCLUDING WITHOUT LIMITATION ANY IMPLIED WARRANTIES OF MERCHANTABILITY, FITNESS FOR A PARTICULAR PURPOSE OR NON-INFRINGEMENT OF THIRD PARTY INTELLECTUAL PROPERTY RIGHTS.

These resources are intended for skilled developers designing with TI products. You are solely responsible for (1) selecting the appropriate TI products for your application, (2) designing, validating and testing your application, and (3) ensuring your application meets applicable standards, and any other safety, security, regulatory or other requirements.

These resources are subject to change without notice. TI grants you permission to use these resources only for development of an application that uses the TI products described in the resource. Other reproduction and display of these resources is prohibited. No license is granted to any other TI intellectual property right or to any third party intellectual property right. TI disclaims responsibility for, and you will fully indemnify TI and its representatives against, any claims, damages, costs, losses, and liabilities arising out of your use of these resources.

TI’s products are provided subject to TI’s Terms of Sale or other applicable terms available either on ti.com or provided in conjunction with such TI products. TI’s provision of these resources does not expand or otherwise alter TI’s applicable warranties or warranty disclaimers for TI products.

TI objects to and rejects any additional or different terms you may have proposed.

Mailing Address: Texas Instruments, Post Office Box 655303, Dallas, Texas 75265
Copyright © 2022, Texas Instruments Incorporated