Data sheet acquired from Harris Semiconductor
SCHS208D

February 1998 - Revised August 2003

CD54HC4066, CD74HC4066, CD74HCT4066

High-Speed CMOS Logic Quad Bilateral Switch

Features

- **Wide Analog-Input-Voltage Range . . . . . 0V - 10V**
- **Low "ON" Resistance**
  - **V_{CC} = 4.5V. 25Ω**
  - **V_{CC} = 9V 15Ω**
- **Fast Switching and Propagation Delay Times**
- **Low "OFF" Leakage Current**
- **Wide Operating Temperature Range . . . -55°C to 125°C**
- **HC Types**
  - **2V to 10V Operation**
  - **High Noise Immunity: N_{IL} = 30%, N_{IH} = 30% of V_{CC} at V_{CC} = 5V and 10V**
- **HCT Types**
  - **Direct LSTTL Input Logic Compatibility, V_{IL}= 0.8V (Max), V_{IH} = 2V (Min)**
  - **CMOS Input Compatibility, $I_I \leq 1\mu A$ at V_{OL}, V_{OH}**

Description

The 'HC4066 and CD74HCT4066 contain four independent digitally controlled analog switches that use silicon-gate CMOS technology to achieve operating speeds similar to LSTTL with the low power consumption of standard CMOS integrated circuits.

These switches feature the characteristic linear "ON" resistance of the metal-gate CD4066B. Each switch is turned on by a high-level voltage on its control input.

Ordering Information

PART NUMBER	TEMP. RANGE (°C)	PACKAGE
CD54HC4066F3A	-55 to 125	14 Ld CERDIP
CD74HC4066E	-55 to 125	14 Ld PDIP
CD74HC4066M	-55 to 125	14 Ld SOIC
CD74HC4066MT	-55 to 125	14 Ld SOIC
CD74HC4066M96	-55 to 125	14 Ld SOIC
CD74HC4066PW	-55 to 125	14 Ld TSSOP
CD74HC4066PWR	-55 to 125	14 Ld TSSOP
CD74HC4066PWT	-55 to 125	14 Ld TSSOP
CD74HCT4066E	-55 to 125	14 Ld PDIP
CD74HCT4066M	-55 to 125	14 Ld SOIC
CD74HCT4066MT	-55 to 125	14 Ld SOIC
CD74HCT4066M96	-55 to 125	14 Ld SOIC

NOTE: When ordering, use the entire part number. The suffixes 96 and R denote tape and reel. The suffix T denotes a small-quantity reel of 250.

Pinout

CD54HC4066 (CERDIP)
CD74HC4066 (PDIP, SOIC, TSSOP)
CD74HCT4066 (PDIP, SOIC)
TOP VIEW

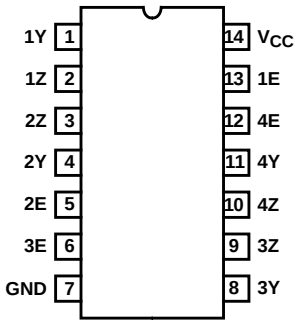

CAUTION: These devices are sensitive to electrostatic discharge. Users should follow proper IC Handling Procedures.

Copyright © 2003, Texas Instruments Incorporated

Functional Diagram

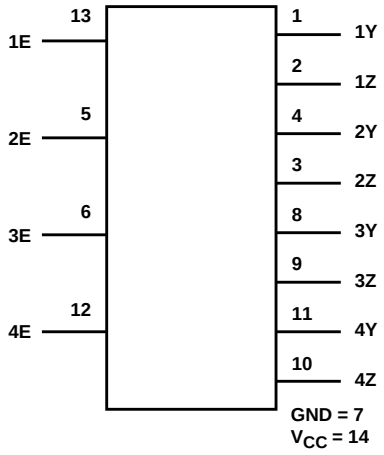

TRUTH TABLE

INPUT nE	SWITCH
L	Off
H	On

H= High Level
L= Low Level

Logic Diagram

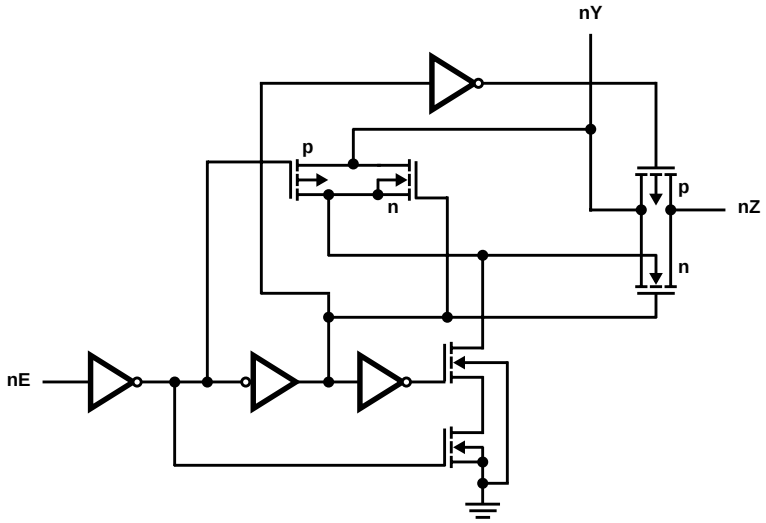

Absolute Maximum Ratings

DC Supply Voltage, V_{CC}
- HCT Types . . . . . -0.5V to 7V
- HC Types . . . . . -0.5V to 10.5V

DC Input Diode Current, I_{IK}
- For V_I < -0.5V or V_I > V_{CC} + 0.5V . . . . . ±20mA

DC Switch Current, I_O (Note 1)
- For -0.5V < V_O < V_{CC} + 0.5V . . . . . ±25mA

DC Output Diode Current, I_{OK}
- For V_O < -0.5V or V_O > V_{CC} + 0.5V . . . . . ±20mA

DC Output Source or Sink Current per Output Pin, I_O
- For V_O > -0.5V or V_O < V_{CC} + 0.5V . . . . . ±25mA

DC V_{CC} or Ground Current, I_{CC} . . . . . ±50mA

Operating Conditions

Temperature Range, T_A . . . . . -55°C to 125°C

Supply Voltage Range, V_{CC}
- HC Types . . . . . 2V to 10V
- HCT Types . . . . . 4.5V to 5.5V

DC Input or Output Voltage, V_I, V_O . . . . . 0V to V_{CC}

Input Rise and Fall Time
- 2V . . . . . 1000ns (Max)
- 4.5V. . . . . 500ns (Max)
- 6V . . . . . 400ns (Max)

Thermal Information

Thermal Resistance (Typical, Note 2) θ_{JA}
- E (PDIP) Package . . . . . 80°C/W
- M (SOIC) Package. . . . . 86°C/W
- PW (TSSOP) Package . . . . . 113°C/W

Maximum Junction Temperature (Hermetic Package or Die) . . . 175°C

Maximum Junction Temperature (Plastic Package) . . . . . 150°C

Maximum Storage Temperature Range . . . . . -65°C to 150°C

Maximum Lead Temperature (Soldering 10s) . . . . . 300°C
(SOIC - Lead Tips Only)

CAUTION: Stresses above those listed in "Absolute Maximum Ratings" may cause permanent damage to the device. This is a stress only rating and operation of the device at these or any other conditions above those indicated in the operational sections of this specification is not implied.

NOTES:

1. In certain applications, the external load-resistor current may include both V_{CC} and signal-line components. To avoid drawing V_{CC} current when switch current flows into the transmission gate inputs, (terminals 1, 4, 8 and 11) the voltage drop across the bidirectional switch must not exceed 0.6V (calculated from R_{ON} values shown in the DC Electrical Specifications Table). No V_{CC} current will flow through R_L if the switch current flows into terminals 2, 3, 9 and 10.
2. The package thermal impedance is calculated in accordance with JESD 51-7.

DC Electrical Specifications

PARAMETER	SYMBOL	TEST CONDITIONS		V_{CC} (V)	25°C			-40°C TO 85°C		-55°C TO 125°C		UNITS
		V_I (V)	V_{IS} (V)		MIN	TYP	MAX	MIN	MAX	MIN	MAX	
HC TYPES												
High Level Input Voltage	V_{IH}	-	-	2	1.5	-	-	1.5	-	1.5	-	V
				4.5	3.15	-	-	3.15	-	3.15	-	V
				9	6.3	-	-	6.3	-	6.3	-	V
Low Level Input Voltage	V_{IL}	-	-	2	-	-	0.5	-	0.5	-	0.5	V
				4.5	-	-	1.35	-	1.35	-	1.35	V
				9	-	-	2.7	-	2.7	-	2.7	V
Input Leakage Current (Any Control)	I_{IL}	V_{CC} or GND	-	10	-	-	±0.1	-	±1	-	±1	µA
Off-Switch Leakage Current	I_Z	V_{IL}	V_{CC} or GND	10	-	-	±0.1	-	±1	-	±1	µA

DC Electrical Specifications (Continued)

PARAMETER	SYMBOL	TEST CONDITIONS V_I (V)	TEST CONDITIONS V_{IS} (V)	V_{CC} (V)	25°C MIN	25°C TYP	25°C MAX	-40°C TO 85°C MIN	-40°C TO 85°C MAX	-55°C TO 125°C MIN	-55°C TO 125°C MAX	UNITS
"ON" Resistance I_O = 1mA (Figure 1)	R_{ON}	V_{CC}	V_{CC} or GND	4.5	-	25	80	-	106	-	128	Ω
				6	-	20	75	-	94	-	113	Ω
				9	-	15	60	-	78	-	95	Ω
			V_{CC} to GND	4.5	-	35	95	-	118	-	142	Ω
				6	-	24	84	-	105	-	126	Ω
				9	-	16	70	-	88	-	105	Ω
"ON" Resistance Between Any Two Switches	ΔR_{ON}	V_{CC}	-	4.5	-	1	-	-	-	-	-	Ω
				6	-	0.75	-	-	-	-	-	Ω
				9	-	0.5	-	-	-	-	-	Ω
Quiescent Device Current	I_{CC}	V_{CC} or GND	-	6	-	-	2	-	20	-	40	µA
				10	-	-	16	-	160	-	320	µA
HCT TYPES												
High Level Input Voltage	V_{IH}	-	-	4.5 to 5.5	2	-	-	2	-	2	-	V
Low Level Input Voltage	V_{IL}	-	-	4.5 to 5.5	-	-	0.8	-	0.8	-	0.8	V
Input Leakage Current (Any Control)	I_{IL}	V_{CC} or GND	-	5.5	-	-	±0.1	-	±1	-	±1	µA
Off-Switch Leakage Current	I_Z	V_{IL}	V_{CC} or GND	5.5	-	-	±0.1	-	±1	-	±1	µA
"ON" Resistance I_O = 1mA (Figure 1)	R_{ON}	V_{CC}	V_{CC} or GND	4.5	-	25	80	-	106	-	128	Ω
			V_{CC} to GND	4.5	-	35	95	-	118	-	142	Ω
"ON" Resistance Between Any Two Switches	ΔR_{ON}	V_{CC}	-	4.5	-	1	-	-	-	-	-	Ω
Quiescent Device Current	I_{CC}	V_{CC} or GND	-	5.5	-	-	2	-	20	-	40	µA
Additional Quiescent Device Current Per Input Pin: 1 Unit Load	ΔI_{CC} (Note 3)	V_{CC} - 2.1	-	4.5 to 5.5	-	100	360	-	450	-	490	µA

NOTE:

3. For dual-supply systems theoretical worst case (V_I = 2.4V, V_{CC} = 5.5V) specification is 1.8mA.

HCT Input Loading Table

INPUT	UNIT LOADS
All	1

NOTE: Unit Load is ΔI_{CC} limit specified in DC Electrical Specifications table, e.g., 360µA max at 25°C.

Switching Specifications Input t_r, t_f = 6ns

PARAMETER	SYMBOL	TEST CONDITIONS	V_{CC} (V)	25°C			-40°C TO 85°C		-55°C TO 125°C		UNITS
				MIN	TYP	MAX	MIN	MAX	MIN	MAX	
HC TYPES											
Propagation Delay Time Switch In to Out	t_{PLH}, t_{PHL}	C_L = 50pF	2	-	-	60	-	75	-	90	ns
			4.5	-	-	12	-	15	-	18	ns
			9	-	-	8	-	11	-	13	ns
		C_L = 15pF	5	-	4	-	-	-	-	-	ns
Propagation Delay Time Switch Turn On Delay	t_{PZH}, t_{PZL}	C_L = 50pF	2	-	-	100	-	125	-	150	ns
			4.5	-	-	20	-	25	-	30	ns
			9	-	-	12	-	15	-	18	ns
		C_L = 15pF	5	-	8	-	-	-	-	-	ns
Propagation Delay Time Switch Turn Off Delay	t_{PHZ}, t_{PLZ}	C_L = 50pF	2	-	-	150	-	190	-	225	ns
			4.5	-	-	30	-	38	-	45	ns
			9	-	-	24	-	30	-	36	ns
		C_L = 15pF	5	-	12	-	-	-	-	-	ns
Input (Control) Capacitance	C_I	-	-	-	-	10	-	10	-	10	pF
Power Dissipation Capacitance (Notes 4, 5)	C_{PD}	-	5	-	25	-	-	-	-	-	pF
HCT TYPES											
Propagation Delay Time Switch In to Out	t_{PLH}, t_{PHL}	C_L = 50pF	4.5	-	-	12	-	15	-	18	ns
		C_L = 15pF	5	-	4	-	-	-	-	-	ns
Propagation Delay Time Switch Turn On Delay	t_{PZH}, t_{PZL}	C_L = 50pF	4.5	-	-	24	-	30	-	36	ns
		C_L = 15pF	5	-	9	-	-	-	-	-	ns
Propagation Delay Time Switch Turn Off Delay	t_{PHZ}, t_{PLZ}	C_L = 50pF	4.5	-	-	35	-	44	-	53	ns
		C_L = 15pF	5	-	14	-	-	-	-	-	ns
Input (Control) Capacitance	C_I	-	-	-	-	10	-	10	-	10	pF
Power Dissipation Capacitance (Notes 4, 5)	C_{PD}	-	5	-	38	-	-	-	-	-	pF

NOTES:

4. C_{PD} is used to determine the dynamic power consumption, per package.
5. $P_D = C_{PD} V_{CC}^2 f_i + \Sigma (C_L + C_S) V_{CC}^2 f_o$ where f_i = input frequency, f_o = output frequency, C_L = output load capacitance, C_S = switch capacitance, V_{CC} = supply voltage.

Analog Channel Specifications T_A = 25°C

PARAMETER	TEST CONDITIONS	V_{CC} (V)	HC4066	CD74HCT4066	UNITS
Switch Frequency Response Bandwidth at -3dB Figure 2	Figure 5, Notes 6, 7	4.5	200	200	MHz
Cross Talk Between Any Two Switches Figure 3	Figure 4, Notes 7, 8	4.5	-72	-72	dB
Total Harmonic Distortion	Figure 6, 1kHz, $V_{IS} = 4V_{P-P}$	4.5	0.022	0.023	%
	Figure 6, 1kHz, $V_{IS} = 8V_{P-P}$	9	0.008	N/A	%

Analog Channel Specifications $T_A = 25^oC$ (Continued)

PARAMETER	TEST CONDITIONS	V_{CC} (V)	HC4066	CD74HCT4066	UNITS
Control to Switch Feedthrough Noise	Figure 7	4.5	200	130	mV
		9	550	N/A	mV
Switch “OFF” Signal Feedthrough Figure 3	Figure 8, Notes 7, 8	4.5	-72	-72	dB
Switch Input Capacitance, C_S		-	5	5	pF

NOTES:

6. Adjust input level for 0dBm at output, f = 1MHz.
7. V_{IS} is centered at $V_{CC}/2$.
8. Adjust input for 0dBm at V_{IS}.

Typical Performance Curves

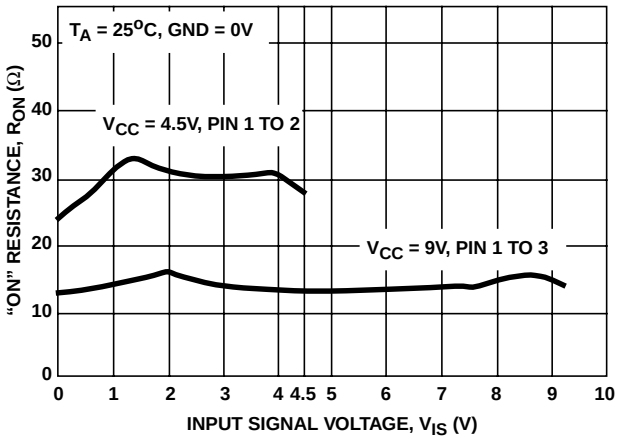

FIGURE 1. TYPICAL “ON” RESISTANCE vs INPUT SIGNAL VOLTAGE

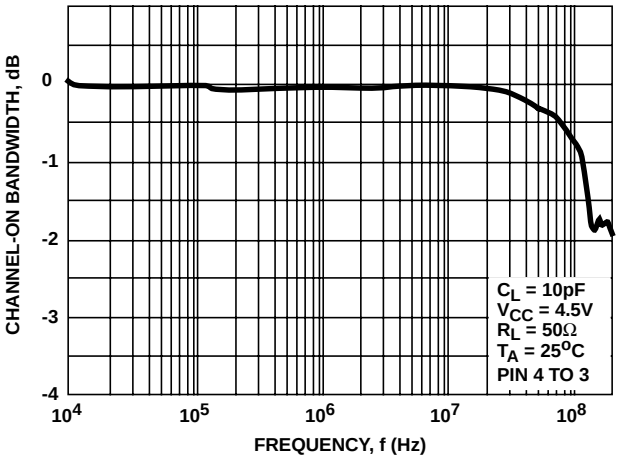

FIGURE 2. SWITCH FREQUENCY RESPONSE, V_{CC} = 4.5V

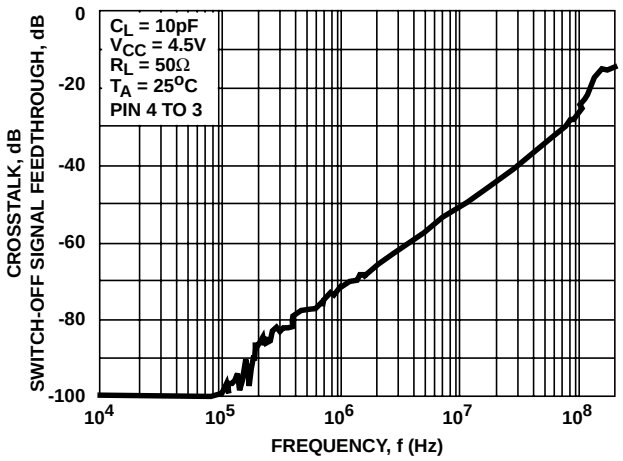

FIGURE 3. SWITCH-OFF SIGNAL FEEDTHROUGH AND CROSSTALK vs FREQUENCY, V_{CC} = 4.5V

Analog Test Circuits

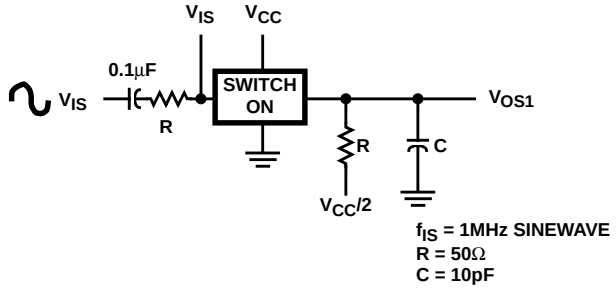

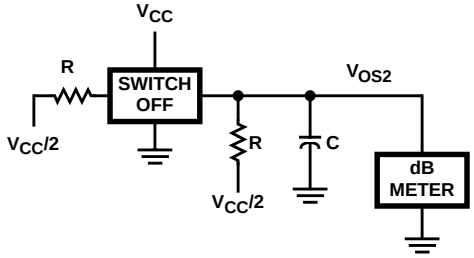

FIGURE 4. CROSSTALK BETWEEN TWO SWITCHES TEST CIRCUIT

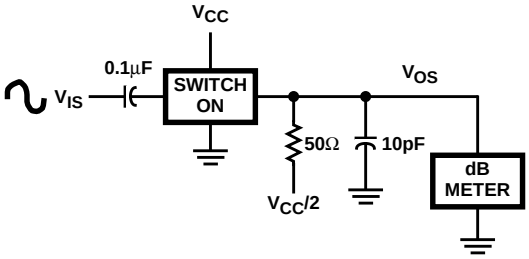

FIGURE 5. FREQUENCY RESPONSE TEST CIRCUIT

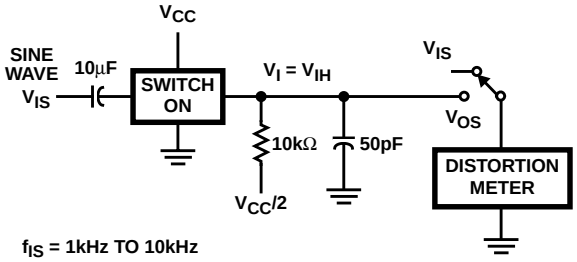

FIGURE 6. TOTAL HARMONIC DISTORTION TEST CIRCUIT

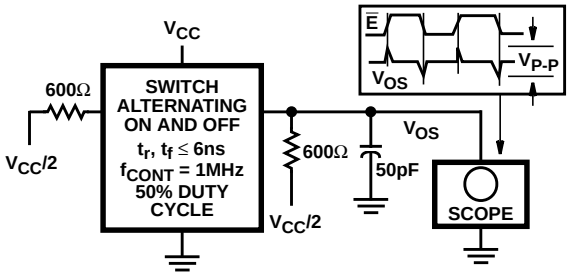

FIGURE 7. CONTROL-TO-SWITCH FEEDTHROUGH NOISE TEST CIRCUIT

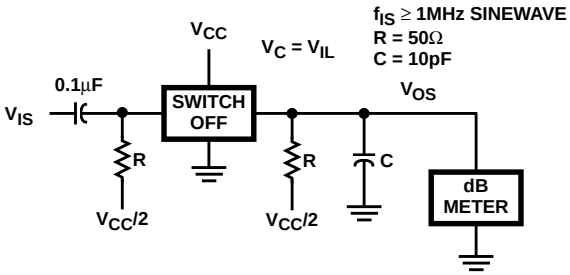

FIGURE 8. SWITCH OFF SIGNAL FEEDTHROUGH

Test Circuits and Waveforms

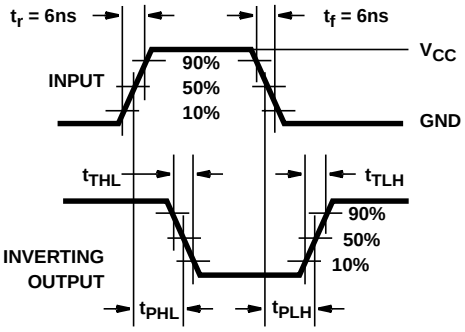

FIGURE 9. HC TRANSITION TIMES AND PROPAGATION DELAY TIMES, COMBINATION LOGIC

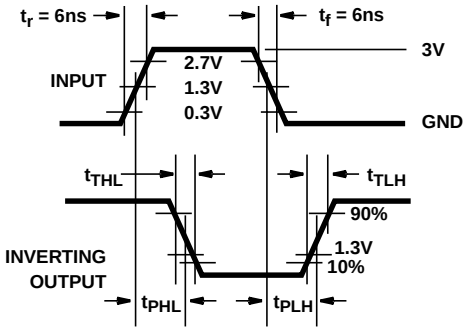

FIGURE 10. HCT TRANSITION TIMES AND PROPAGATION DELAY TIMES, COMBINATION LOGIC

PACKAGING INFORMATION

Orderable Device	Status (1)	Package Type	Package Drawing	Pins	Package Qty	Eco Plan (2)	Lead finish/ Ball material (6)	MSL Peak Temp (3)	Op Temp (°C)	Device Marking (4/5)	Samples
5962-8950701CA	ACTIVE	CDIP	J	14	1	Non-RoHS & Green	SNPB	N / A for Pkg Type	-55 to 125	5962-8950701CA CD54HC4066F3A	Samples
CD54HC4066F3A	ACTIVE	CDIP	J	14	1	Non-RoHS & Green	SNPB	N / A for Pkg Type	-55 to 125	5962-8950701CA CD54HC4066F3A	Samples
CD74HC4066E	ACTIVE	PDIP	N	14	25	RoHS & Green	NIPDAU	N / A for Pkg Type	-55 to 125	CD74HC4066E	Samples
CD74HC4066EE4	ACTIVE	PDIP	N	14	25	RoHS & Green	NIPDAU	N / A for Pkg Type	-55 to 125	CD74HC4066E	Samples
CD74HC4066M	ACTIVE	SOIC	D	14	50	RoHS & Green	NIPDAU	Level-1-260C-UNLIM	-55 to 125	HC4066M	Samples
CD74HC4066M96	ACTIVE	SOIC	D	14	2500	RoHS & Green	NIPDAU	Level-1-260C-UNLIM	-55 to 125	HC4066M	Samples
CD74HC4066M96E4	ACTIVE	SOIC	D	14	2500	RoHS & Green	NIPDAU	Level-1-260C-UNLIM	-55 to 125	HC4066M	Samples
CD74HC4066ME4	ACTIVE	SOIC	D	14	50	RoHS & Green	NIPDAU	Level-1-260C-UNLIM	-55 to 125	HC4066M	Samples
CD74HC4066MG4	ACTIVE	SOIC	D	14	50	RoHS & Green	NIPDAU	Level-1-260C-UNLIM	-55 to 125	HC4066M	Samples
CD74HC4066MT	ACTIVE	SOIC	D	14	250	RoHS & Green	NIPDAU	Level-1-260C-UNLIM	-55 to 125	HC4066M	Samples
CD74HC4066PW	ACTIVE	TSSOP	PW	14	90	RoHS & Green	NIPDAU	Level-1-260C-UNLIM	-55 to 125	HP4066	Samples
CD74HC4066PWG4	ACTIVE	TSSOP	PW	14	90	RoHS & Green	NIPDAU	Level-1-260C-UNLIM	-55 to 125	HP4066	Samples
CD74HC4066PWR	ACTIVE	TSSOP	PW	14	2000	RoHS & Green	NIPDAU	Level-1-260C-UNLIM	-55 to 125	HP4066	Samples
CD74HC4066PWT	ACTIVE	TSSOP	PW	14	250	RoHS & Green	NIPDAU	Level-1-260C-UNLIM	-55 to 125	HP4066	Samples
CD74HCT4066E	ACTIVE	PDIP	N	14	25	RoHS & Green	NIPDAU	N / A for Pkg Type	-55 to 125	CD74HCT4066E	Samples
CD74HCT4066M	ACTIVE	SOIC	D	14	50	RoHS & Green	NIPDAU	Level-1-260C-UNLIM	-55 to 125	HCT4066M	Samples
CD74HCT4066M96	ACTIVE	SOIC	D	14	2500	RoHS & Green	NIPDAU	Level-1-260C-UNLIM	-55 to 125	HCT4066M	Samples
CD74HCT4066MT	ACTIVE	SOIC	D	14	250	RoHS & Green	NIPDAU	Level-1-260C-UNLIM	-55 to 125	HCT4066M	Samples

(1) The marketing status values are defined as follows:
ACTIVE: Product device recommended for new designs.

LIFEBUY: TI has announced that the device will be discontinued, and a lifetime-buy period is in effect.
NRND: Not recommended for new designs. Device is in production to support existing customers, but TI does not recommend using this part in a new design.
PREVIEW: Device has been announced but is not in production. Samples may or may not be available.
OBSOLETE: TI has discontinued the production of the device.

(2) **RoHS:** TI defines "RoHS" to mean semiconductor products that are compliant with the current EU RoHS requirements for all 10 RoHS substances, including the requirement that RoHS substance do not exceed 0.1% by weight in homogeneous materials. Where designed to be soldered at high temperatures, "RoHS" products are suitable for use in specified lead-free processes. TI may reference these types of products as "Pb-Free".
RoHS Exempt: TI defines "RoHS Exempt" to mean products that contain lead but are compliant with EU RoHS pursuant to a specific EU RoHS exemption.
Green: TI defines "Green" to mean the content of Chlorine (Cl) and Bromine (Br) based flame retardants meet JS709B low halogen requirements of <=1000ppm threshold. Antimony trioxide based flame retardants must also meet the <=1000ppm threshold requirement.

(3) MSL, Peak Temp. - The Moisture Sensitivity Level rating according to the JEDEC industry standard classifications, and peak solder temperature.

(4) There may be additional marking, which relates to the logo, the lot trace code information, or the environmental category on the device.

(5) Multiple Device Markings will be inside parentheses. Only one Device Marking contained in parentheses and separated by a "~" will appear on a device. If a line is indented then it is a continuation of the previous line and the two combined represent the entire Device Marking for that device.

(6) Lead finish/Ball material - Orderable Devices may have multiple material finish options. Finish options are separated by a vertical ruled line. Lead finish/Ball material values may wrap to two lines if the finish value exceeds the maximum column width.

Important Information and Disclaimer: The information provided on this page represents TI's knowledge and belief as of the date that it is provided. TI bases its knowledge and belief on information provided by third parties, and makes no representation or warranty as to the accuracy of such information. Efforts are underway to better integrate information from third parties. TI has taken and continues to take reasonable steps to provide representative and accurate information but may not have conducted destructive testing or chemical analysis on incoming materials and chemicals. TI and TI suppliers consider certain information to be proprietary, and thus CAS numbers and other limited information may not be available for release.

In no event shall TI's liability arising out of such information exceed the total purchase price of the TI part(s) at issue in this document sold by TI to Customer on an annual basis.

OTHER QUALIFIED VERSIONS OF CD54HC4066, CD74HC4066, CD74HCT4066 :

- Catalog : CD74HC4066
- Automotive : CD74HCT4066-Q1
- Military : CD54HC4066

NOTE: Qualified Version Definitions:

- Catalog - TI's standard catalog product
- Automotive - Q100 devices qualified for high-reliability automotive applications targeting zero defects
- Military - QML certified for Military and Defense Applications

TAPE AND REEL INFORMATION

REEL DIMENSIONS

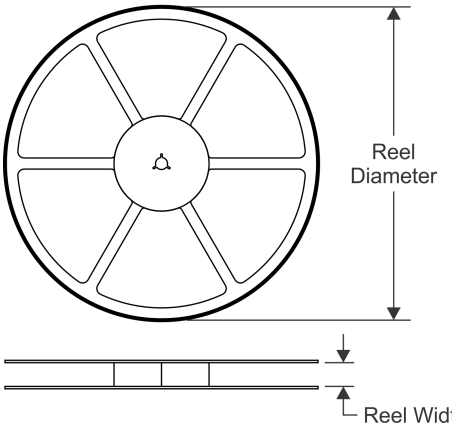

TAPE DIMENSIONS

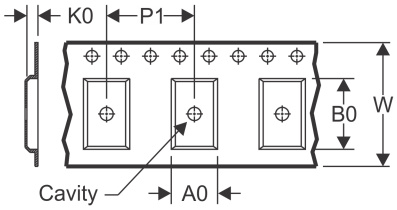

A0	Dimension designed to accommodate the component width
B0	Dimension designed to accommodate the component length
K0	Dimension designed to accommodate the component thickness
W	Overall width of the carrier tape
P1	Pitch between successive cavity centers

QUADRANT ASSIGNMENTS FOR PIN 1 ORIENTATION IN TAPE

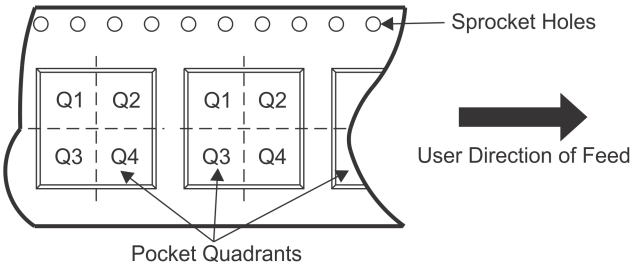

*All dimensions are nominal

Device	Package Type	Package Drawing	Pins	SPQ	Reel Diameter (mm)	Reel Width W1 (mm)	A0 (mm)	B0 (mm)	K0 (mm)	P1 (mm)	W (mm)	Pin1 Quadrant
CD74HC4066M96	SOIC	D	14	2500	330.0	16.4	6.5	9.0	2.1	8.0	16.0	Q1
CD74HC4066MT	SOIC	D	14	250	330.0	16.4	6.5	9.0	2.1	8.0	16.0	Q1
CD74HC4066PWR	TSSOP	PW	14	2000	330.0	12.4	6.9	5.6	1.6	8.0	12.0	Q1
CD74HC4066PWT	TSSOP	PW	14	250	330.0	12.4	6.9	5.6	1.6	8.0	12.0	Q1
CD74HCT4066M96	SOIC	D	14	2500	330.0	16.4	6.5	9.0	2.1	8.0	16.0	Q1
CD74HCT4066MT	SOIC	D	14	250	330.0	16.4	6.5	9.0	2.1	8.0	16.0	Q1

TAPE AND REEL BOX DIMENSIONS

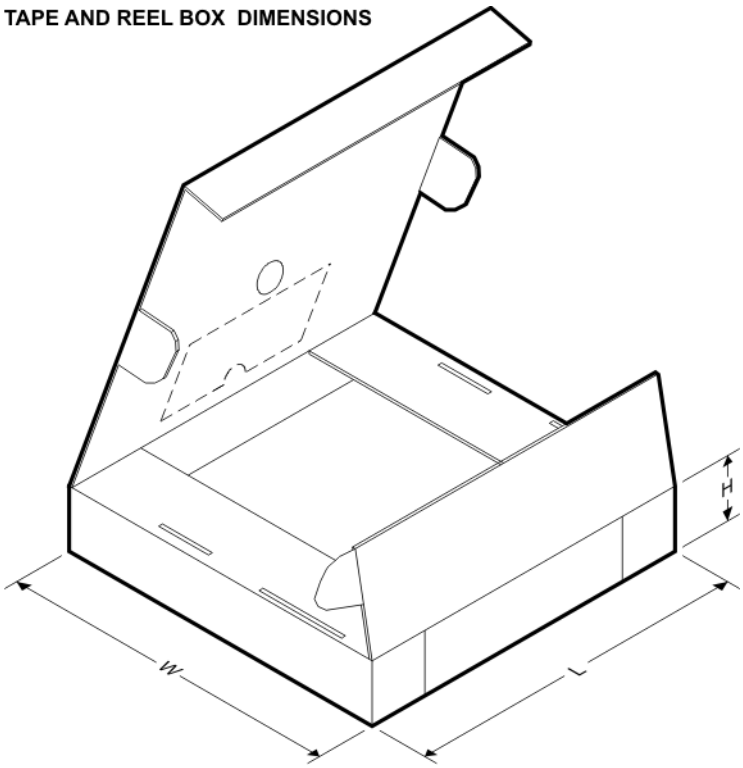

*All dimensions are nominal

Device	Package Type	Package Drawing	Pins	SPQ	Length (mm)	Width (mm)	Height (mm)
CD74HC4066M96	SOIC	D	14	2500	853.0	449.0	35.0
CD74HC4066MT	SOIC	D	14	250	210.0	185.0	35.0
CD74HC4066PWR	TSSOP	PW	14	2000	853.0	449.0	35.0
CD74HC4066PWT	TSSOP	PW	14	250	853.0	449.0	35.0
CD74HCT4066M96	SOIC	D	14	2500	853.0	449.0	35.0
CD74HCT4066MT	SOIC	D	14	250	210.0	185.0	35.0

TUBE

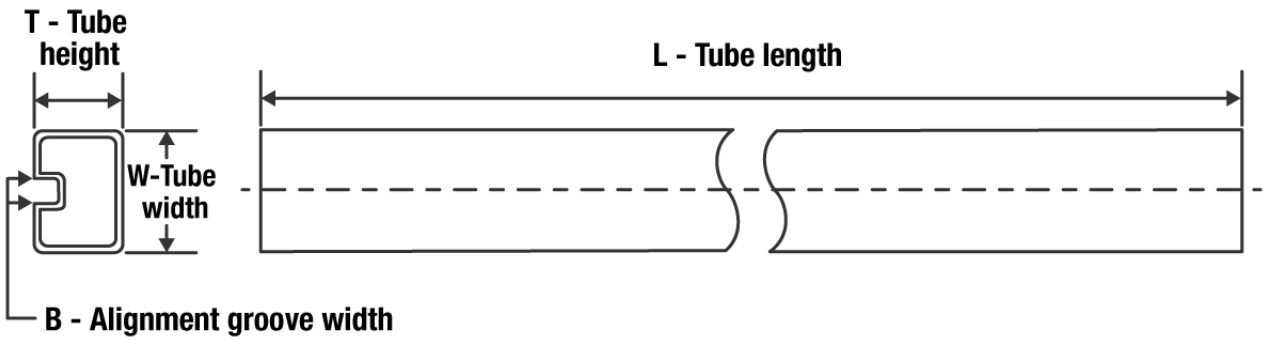

*All dimensions are nominal

Device	Package Name	Package Type	Pins	SPQ	L (mm)	W (mm)	T (µm)	B (mm)
CD74HC4066E	N	PDIP	14	25	506	13.97	11230	4.32
CD74HC4066E	N	PDIP	14	25	506	13.97	11230	4.32
CD74HC4066EE4	N	PDIP	14	25	506	13.97	11230	4.32
CD74HC4066EE4	N	PDIP	14	25	506	13.97	11230	4.32
CD74HC4066M	D	SOIC	14	50	506.6	8	3940	4.32
CD74HC4066ME4	D	SOIC	14	50	506.6	8	3940	4.32
CD74HC4066MG4	D	SOIC	14	50	506.6	8	3940	4.32
CD74HC4066PW	PW	TSSOP	14	90	530	10.2	3600	3.5
CD74HC4066PWG4	PW	TSSOP	14	90	530	10.2	3600	3.5
CD74HCT4066E	N	PDIP	14	25	506	13.97	11230	4.32
CD74HCT4066E	N	PDIP	14	25	506	13.97	11230	4.32
CD74HCT4066M	D	SOIC	14	50	506.6	8	3940	4.32

J 14 CDIP - 5.08 mm max height

CERAMIC DUAL IN LINE PACKAGE

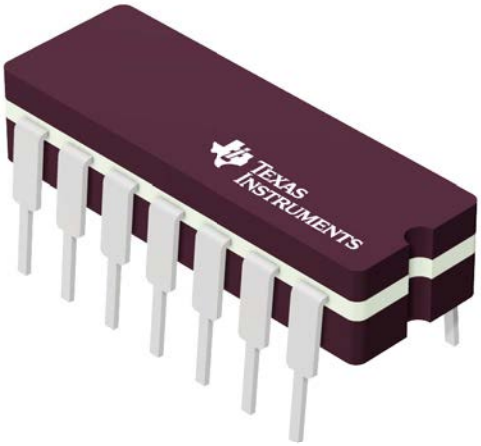

Images above are just a representation of the package family, actual package may vary.
Refer to the product data sheet for package details.

4040083-5/G

PACKAGE OUTLINE

J0014A

CDIP - 5.08 mm max height

CERAMIC DUAL IN LINE PACKAGE

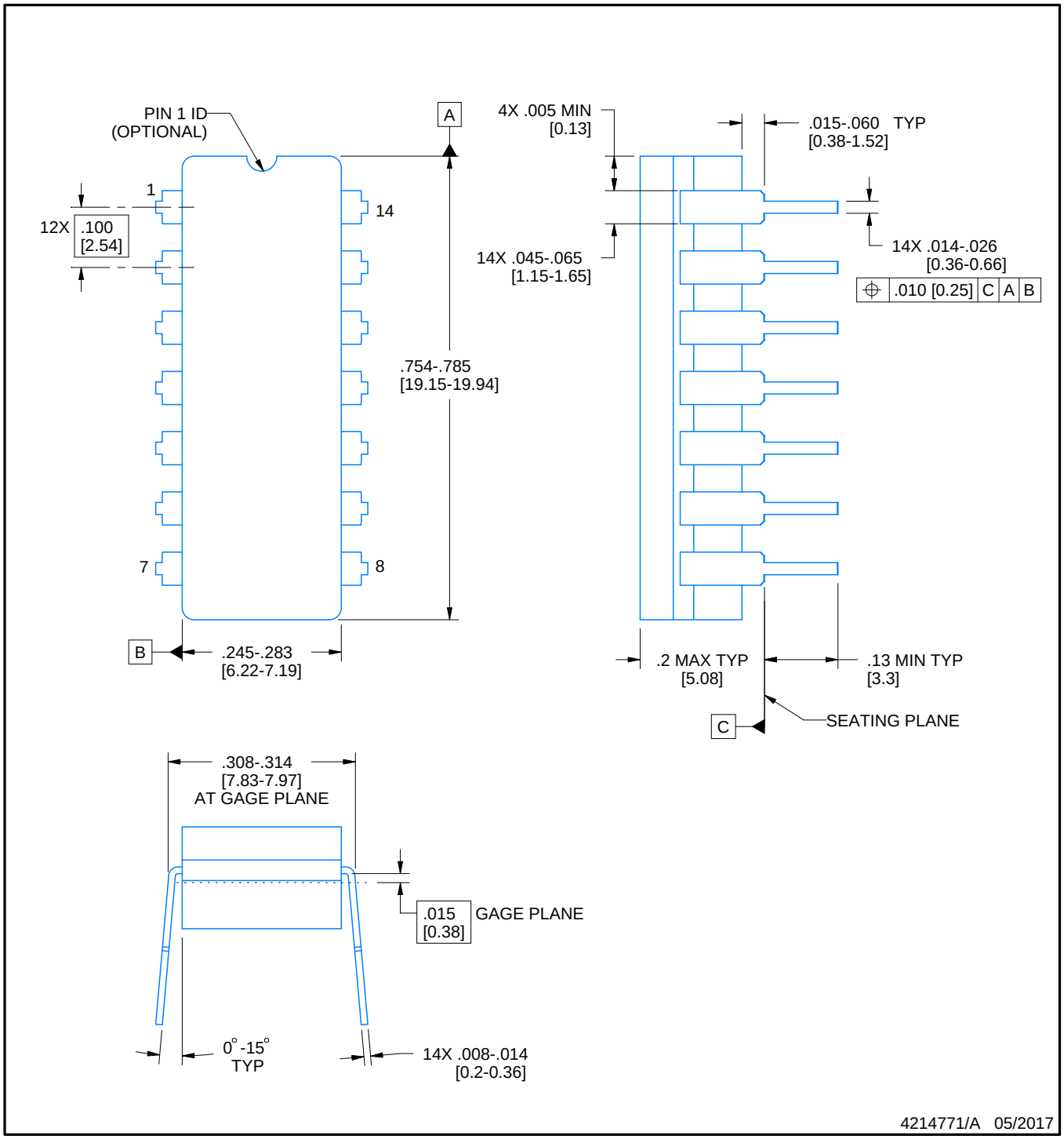

NOTES:

1. All controlling linear dimensions are in inches. Dimensions in brackets are in millimeters. Any dimension in brackets or parenthesis are for reference only. Dimensioning and tolerancing per ASME Y14.5M.
2. This drawing is subject to change without notice.
3. This package is hermitically sealed with a ceramic lid using glass frit.
4. Index point is provided on cap for terminal identification only and on press ceramic glass frit seal only.
5. Falls within MIL-STD-1835 and GDIP1-T14.

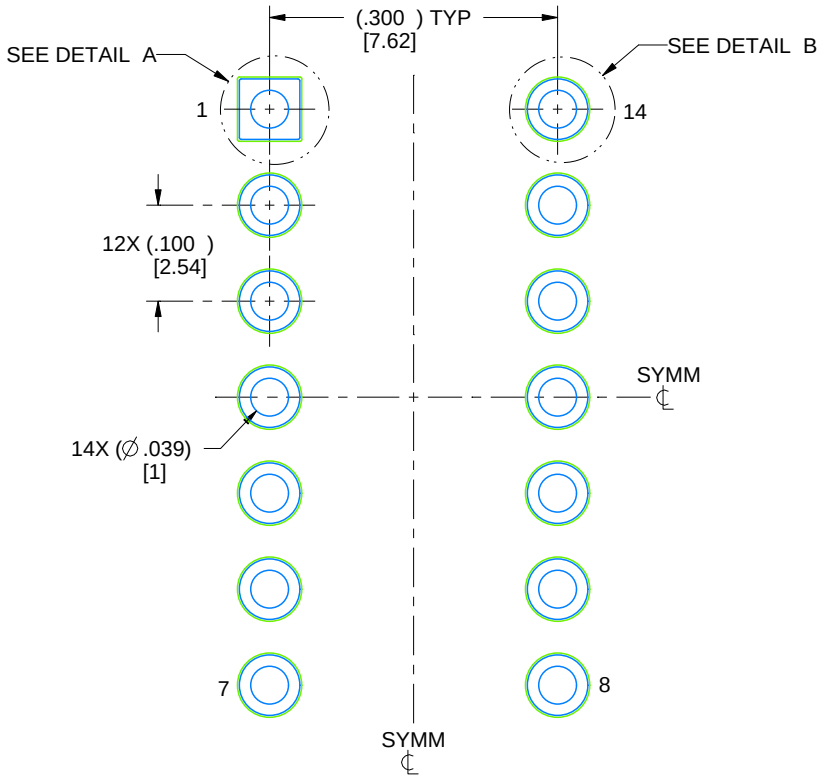

LAND PATTERN EXAMPLE
NON-SOLDER MASK DEFINED
SCALE: 5X

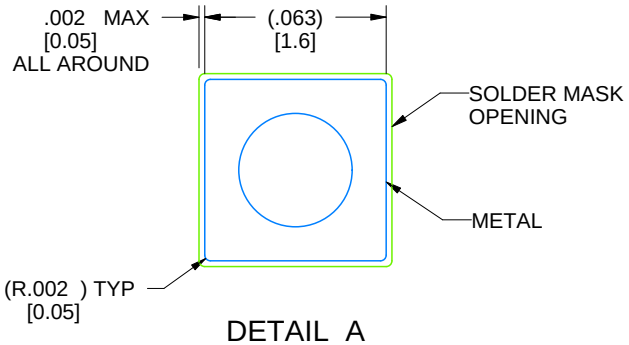

DETAIL A
SCALE: 15X

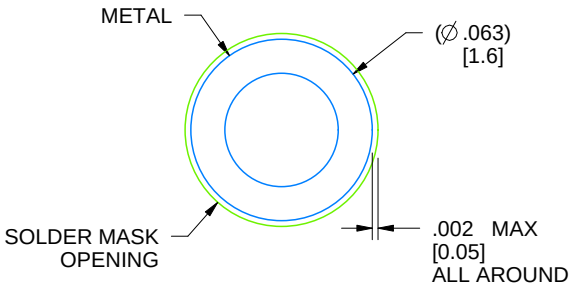

DETAIL B
13X, SCALE: 15X

4214771/A 05/2017

D (R–PDSO–G14) PLASTIC SMALL OUTLINE

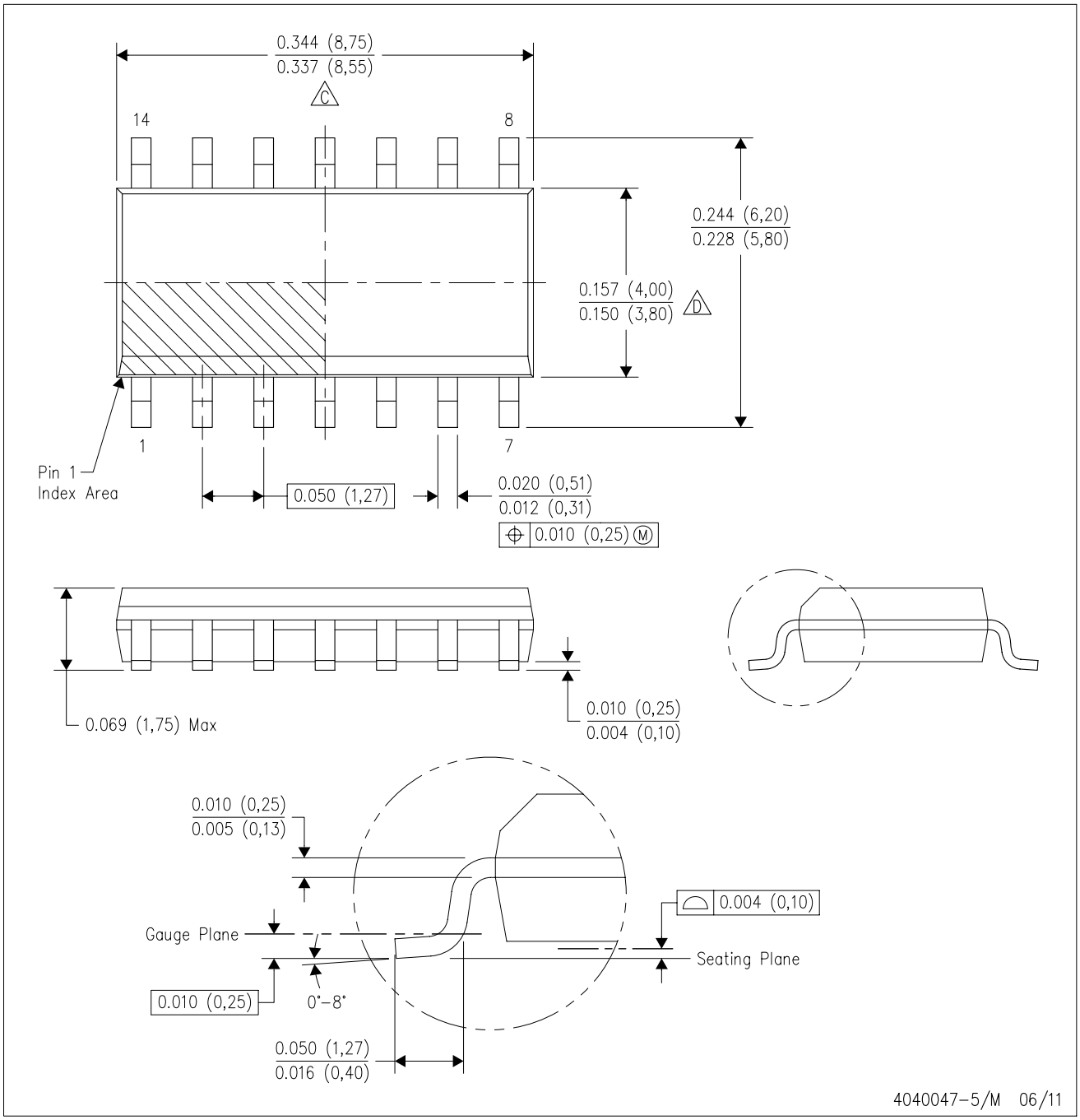

NOTES:
A. All linear dimensions are in inches (millimeters).
B. This drawing is subject to change without notice.
C. Body length does not include mold flash, protrusions, or gate burrs. Mold flash, protrusions, or gate burrs shall not exceed 0.006 (0,15) each side.
D. Body width does not include interlead flash. Interlead flash shall not exceed 0.017 (0,43) each side.
E. Reference JEDEC MS–012 variation AB.

D (R–PDSO–G14) PLASTIC SMALL OUTLINE

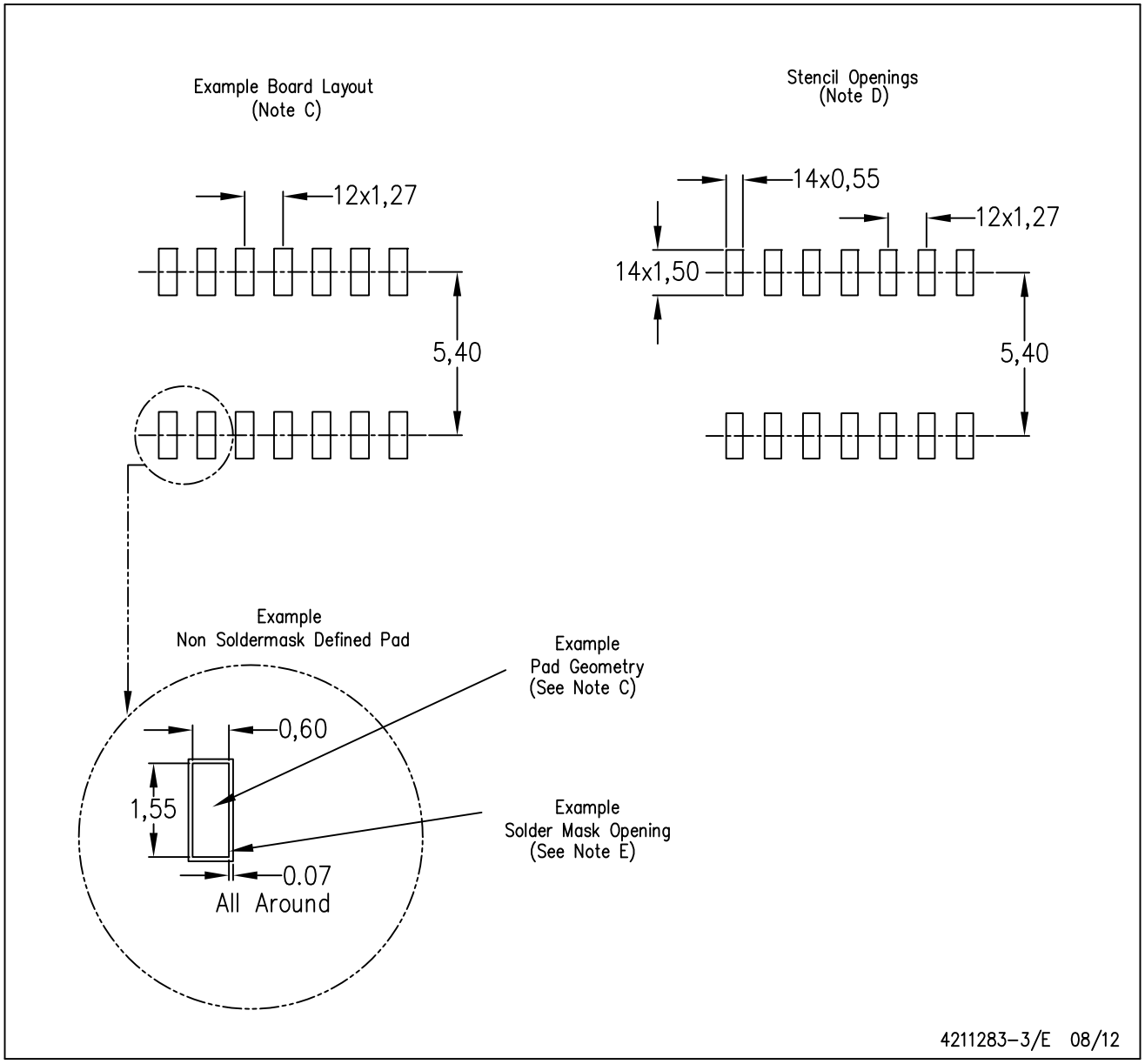

NOTES:
A. All linear dimensions are in millimeters.
B. This drawing is subject to change without notice.
C. Publication IPC–7351 is recommended for alternate designs.
D. Laser cutting apertures with trapezoidal walls and also rounding corners will offer better paste release. Customers should contact their board assembly site for stencil design recommendations. Refer to IPC–7525 for other stencil recommendations.
E. Customers should contact their board fabrication site for solder mask tolerances between and around signal pads.

PW (R–PDSO–G14) PLASTIC SMALL OUTLINE

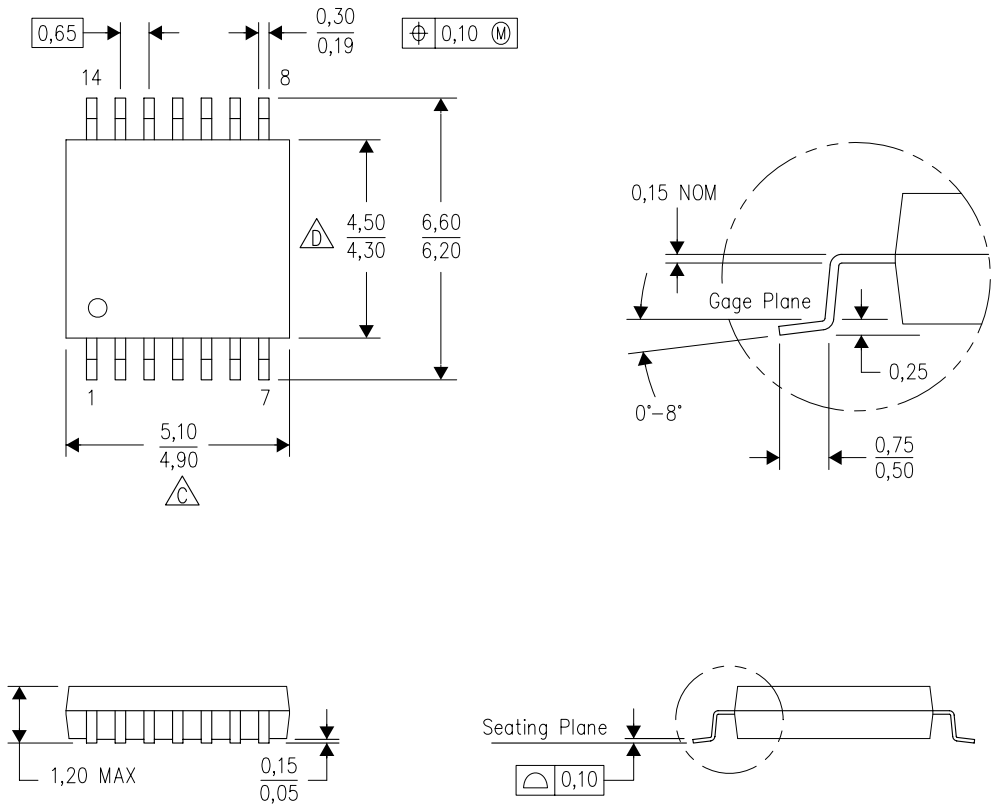

NOTES:
A. All linear dimensions are in millimeters. Dimensioning and tolerancing per ASME Y14.5M–1994.
B. This drawing is subject to change without notice.
C. Body length does not include mold flash, protrusions, or gate burrs. Mold flash, protrusions, or gate burrs shall not exceed 0,15 each side.
D. Body width does not include interlead flash. Interlead flash shall not exceed 0,25 each side.
E. Falls within JEDEC MO–153

PW (R–PDSO–G14) PLASTIC SMALL OUTLINE

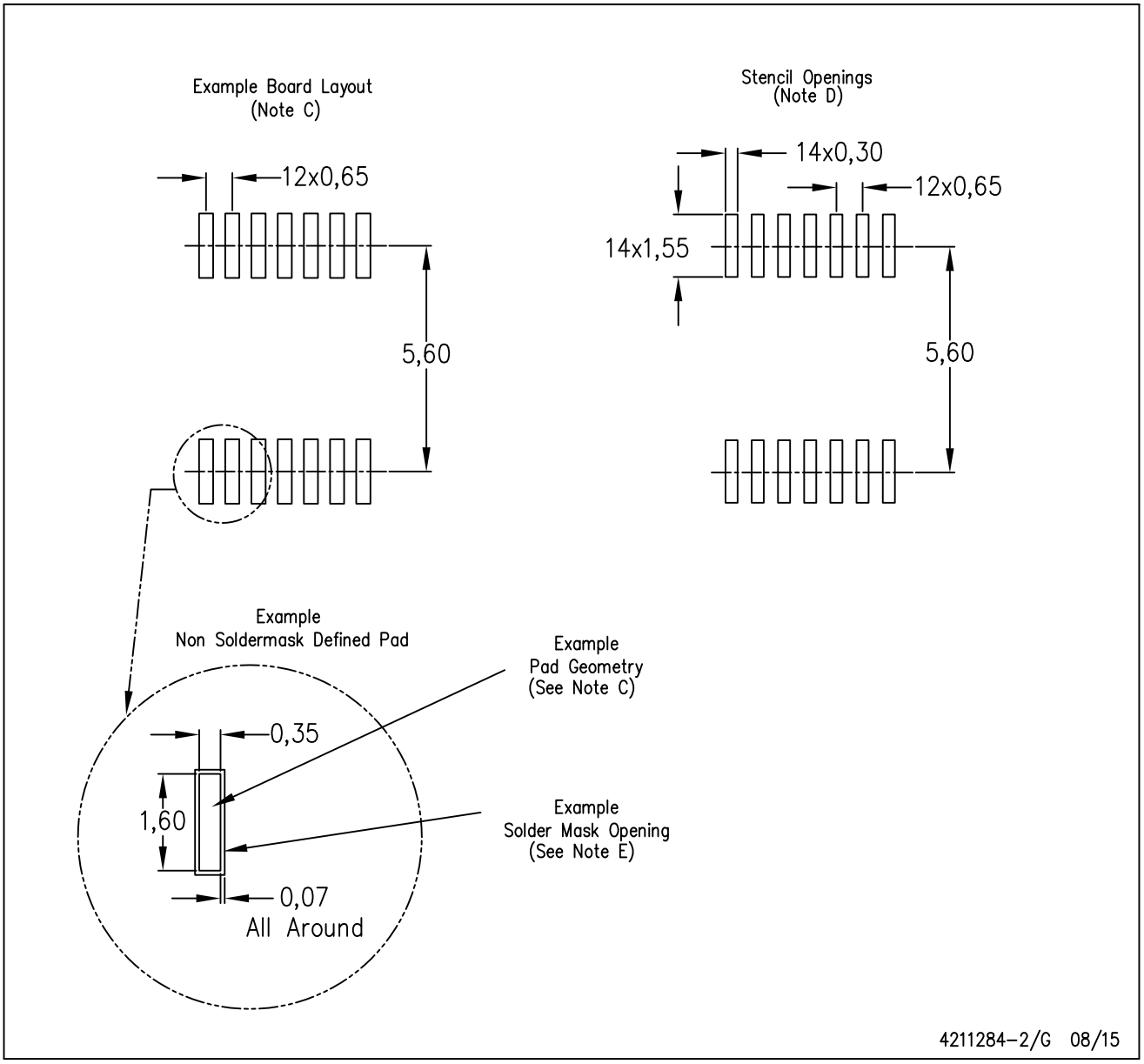

NOTES:
A. All linear dimensions are in millimeters.
B. This drawing is subject to change without notice.
C. Publication IPC–7351 is recommended for alternate designs.
D. Laser cutting apertures with trapezoidal walls and also rounding corners will offer better paste release. Customers should contact their board assembly site for stencil design recommendations. Refer to IPC–7525 for other stencil recommendations.
E. Customers should contact their board fabrication site for solder mask tolerances between and around signal pads.

N (R–PDIP–T**) PLASTIC DUAL–IN–LINE PACKAGE

16 PINS SHOWN

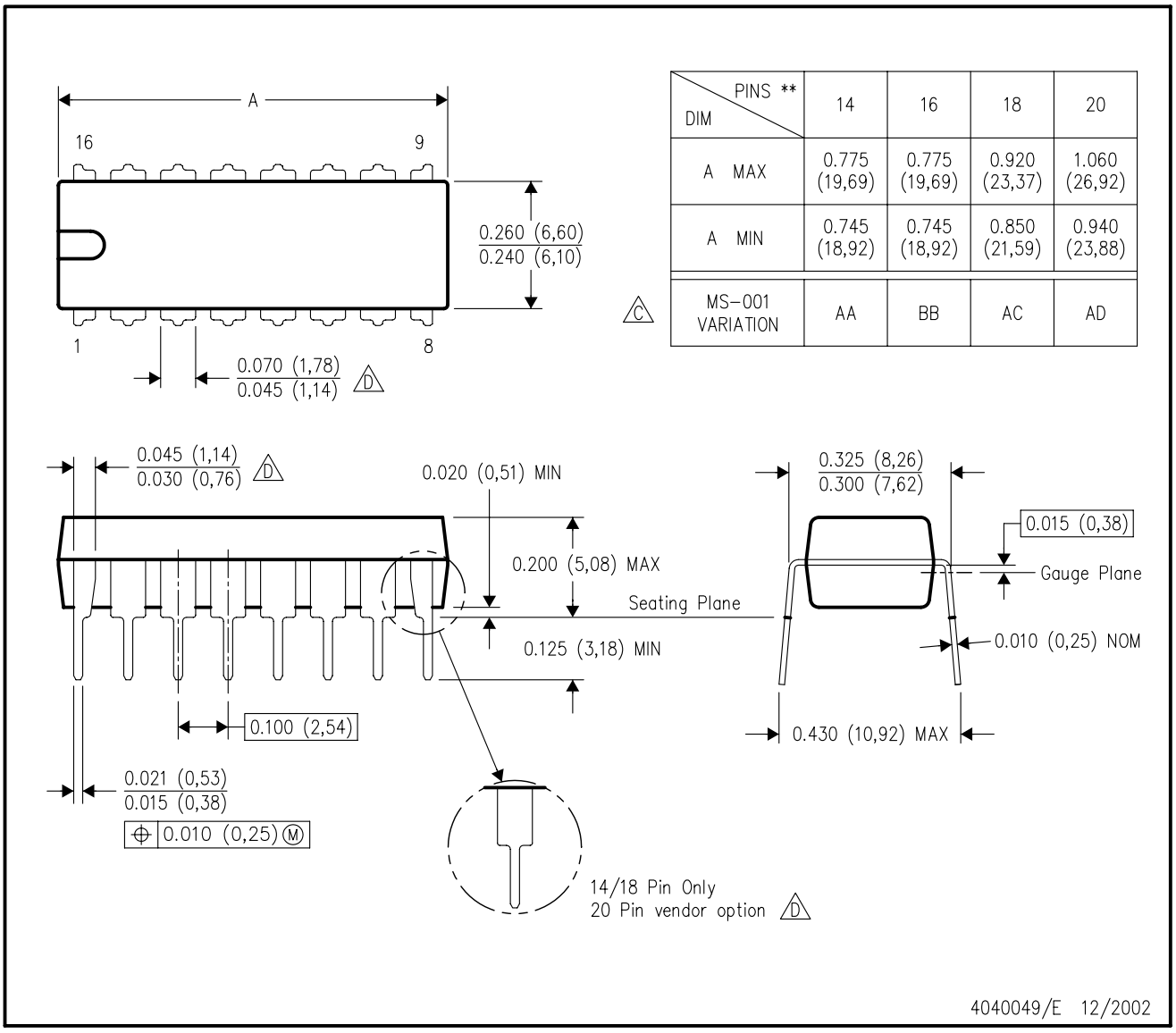

DIM \ PINS **	14	16	18	20
A MAX	0.775 (19,69)	0.775 (19,69)	0.920 (23,37)	1.060 (26,92)
A MIN	0.745 (18,92)	0.745 (18,92)	0.850 (21,59)	0.940 (23,88)
MS–001 VARIATION (C)	AA	BB	AC	AD

NOTES:
A. All linear dimensions are in inches (millimeters).
B. This drawing is subject to change without notice.
C. Falls within JEDEC MS–001, except 18 and 20 pin minimum body length (Dim A).
D. The 20 pin end lead shoulder width is a vendor option, either half or full width.

IMPORTANT NOTICE AND DISCLAIMER

TI PROVIDES TECHNICAL AND RELIABILITY DATA (INCLUDING DATA SHEETS), DESIGN RESOURCES (INCLUDING REFERENCE DESIGNS), APPLICATION OR OTHER DESIGN ADVICE, WEB TOOLS, SAFETY INFORMATION, AND OTHER RESOURCES “AS IS” AND WITH ALL FAULTS, AND DISCLAIMS ALL WARRANTIES, EXPRESS AND IMPLIED, INCLUDING WITHOUT LIMITATION ANY IMPLIED WARRANTIES OF MERCHANTABILITY, FITNESS FOR A PARTICULAR PURPOSE OR NON-INFRINGEMENT OF THIRD PARTY INTELLECTUAL PROPERTY RIGHTS.

These resources are intended for skilled developers designing with TI products. You are solely responsible for (1) selecting the appropriate TI products for your application, (2) designing, validating and testing your application, and (3) ensuring your application meets applicable standards, and any other safety, security, regulatory or other requirements.

These resources are subject to change without notice. TI grants you permission to use these resources only for development of an application that uses the TI products described in the resource. Other reproduction and display of these resources is prohibited. No license is granted to any other TI intellectual property right or to any third party intellectual property right. TI disclaims responsibility for, and you will fully indemnify TI and its representatives against, any claims, damages, costs, losses, and liabilities arising out of your use of these resources.

TI’s products are provided subject to TI’s Terms of Sale or other applicable terms available either on ti.com or provided in conjunction with such TI products. TI’s provision of these resources does not expand or otherwise alter TI’s applicable warranties or warranty disclaimers for TI products.

TI objects to and rejects any additional or different terms you may have proposed.

Mailing Address: Texas Instruments, Post Office Box 655303, Dallas, Texas 75265
Copyright © 2022, Texas Instruments Incorporated