LM78L 100-mA Fixed Output Linear Regulator

1 Features

- For lower cost alternative, see the UA78L
- Input voltage up to 30 V
- Output voltage tolerances of ±5% over the temperature range
- Available output voltages: 5 V, 6.2 V, 8.2 V, 9 V, 12 V, and 15 V
- Output current of 100 mA
- Output transistor safe area protection
- Internal thermal overload protection
- Internal short-circuit current limit
- No external components
- Available in tiny DSBGA package
- Available in 3-pin TO-92 and 8-pin SOIC low profile packages

2 Applications

- Battery chargers
- Portable instrumentation
- LED lighting
- Appliances

Package Options

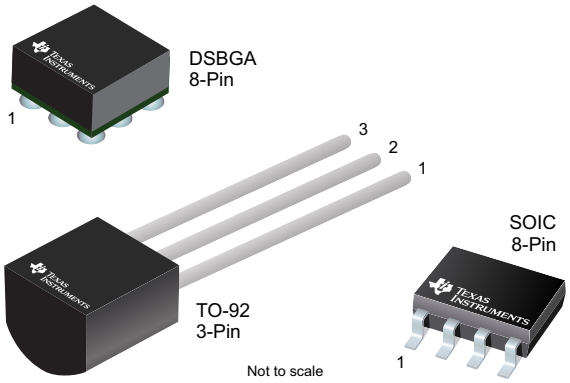

3 Description

The LM78L series (LM78Lxx throughout this document) of three terminal positive regulators is available with several fixed output voltages, making them useful in a wide range of applications. Used as a Zener-diode and resistor combination replacement, the LM78Lxx usually provides an effective output impedance improvement of two orders of magnitude and lower quiescent current. These regulators can provide local, on-card regulation, eliminating distribution problems associated with single-point regulation. The available voltages allow the LM78Lxx to be used in logic systems, instrumentation, HiFi, and other solid-state electronic equipment.

The LM78Lxx is available in the plastic TO-92 (LP) package, the SOIC (D) package, and a chip-sized package (8-Bump DSBGA) using TI's DSBGA package technology. With adequate heat sinking, the regulator can deliver 100-mA output current. Current limiting is included to limit the peak output current to a safe value. Safe area protection for the output transistors is provided to limit internal power dissipation. If internal power dissipation is too high for the heat sinking provided, the thermal shutdown circuit prevents the IC from overheating.

See the *AN-1112 DSBGA Wafer Level Chip Scale Package* application note for DSBGA considerations. For more information on the TO-92 package, see the *TO-92 Packing Options/Ordering Instructions* application report.

Device Information(1)

PART NUMBER	PACKAGE	BODY SIZE (NOM)
LM78L	DSBGA (8)	1.30 mm × 1.30 mm
	SOIC (8)	3.90 mm × 4.90 mm
	TO-92 (3)	3.70 mm × 4.70 mm

(1) For all available packages, see the orderable addendum at the end of the data sheet.

Fixed Output Regulator Circuit

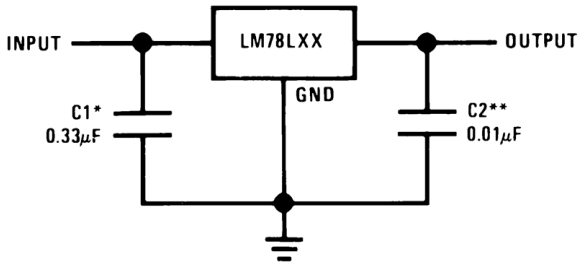

An IMPORTANT NOTICE at the end of this data sheet addresses availability, warranty, changes, use in safety-critical applications, intellectual property matters and other important disclaimers. PRODUCTION DATA.

Table of Contents

1 **Features** ... 1
2 **Applications** ... 1
3 **Description** ... 1
4 **Revision History** ... 2
5 **Device Comparison Table** ... 3
6 **Pin Configuration and Functions** ... 4
7 **Specifications** ... 5
7.1 Absolute Maximum Ratings ... 5
7.2 ESD Ratings ... 5
7.3 Recommended Operating Conditions ... 5
7.4 Thermal Information ... 5
7.5 Electrical Characteristics — LM78L05 ... 6
7.6 Electrical Characteristics — LM78L09 ... 6
7.7 Electrical Characteristics — LM78L12 ... 7
7.8 Electrical Characteristics — LM78L15 ... 7
7.9 Electrical Characteristics — LM78L62 ... 8
7.10 Typical Characteristics ... 9
8 **Detailed Description** ... 11
8.1 Overview ... 11
8.2 Functional Block Diagram ... 11
8.3 Feature Description ... 12
8.4 Device Functional Modes ... 12
9 **Application and Implementation** ... 13
9.1 Application Information ... 13
9.2 Typical Applications ... 13
10 **Power Supply Recommendations** ... 16
11 **Layout** ... 16
11.1 Layout Guidelines ... 16
11.2 Layout Example ... 17
12 **Device and Documentation Support** ... 18
12.1 Documentation Support ... 18
12.2 Receiving Notification of Documentation Updates 18
12.3 Support Resources ... 18
12.4 Trademarks ... 18
12.5 Electrostatic Discharge Caution ... 18
12.6 Glossary ... 18
13 **Mechanical, Packaging, and Orderable Information** ... 18

4 Revision History

NOTE: Page numbers for previous revisions may differ from page numbers in the current version.

Changes from Revision K (December 2016) to Revision L	Page
• Changed product name to LM78L so document matches product folder	1
• Added first *Features* bullet	1
• Added *Device Comparison Table*	3

Changes from Revision J (December 2013) to Revision K	Page
• Added *Applications* section, *Device Information* table, *Pin Configuration and Functions* section, *ESD Ratings* table, *Recommended Operating Conditions* table, *Detailed Description* section, *Application and Implementation* section, *Power Supply Recommendations* section, *Layout* section, *Device and Documentation Support* section, and *Mechanical, Packaging, and Orderable Information* section	1
• Deleted LM78L82 from the data sheet	1
• Added *Thermal Information* table.	1
• Deleted Lead temperature (soldering) information	5
• Changed $R_{\theta JA}$ values for D (SOIC) From: 180 To: 128.8, LP (TO-92) from 230 to 158.7, and YPB (DSBGA) From: 230.9 To 108.4	5
• Changed $R_{\theta JC}$ values for LP (TO-92) From: 60 To 75.2	5

Changes from Revision I (April 2013) to Revision J	Page
• Added the AI suffix	6

Copyright © 2000–2020, Texas Instruments Incorporated

5 Device Comparison Table

I_{OUT}	PARAMETER	LM78xx	UA78	LM340	LM340A	UNIT
1.5 A	Input voltage range	7 - 35	7 - 38	7 - 35	7 - 35	V
	Fixed output voltage option	5, 12, 15	5, 8, 10, 12, 15, 24	5, 12, 15	5, 12, 15	V
	Load regulation accuracy	4	4	4	2	%
	PSRR (120 Hz)	80	78	80	80	dB
	Recommended operating temperature	0 - 125	0 - 125	0 - 125	0 - 125	°C
	TO-220 T_{JA}	23.9	19	23.9	23.9	°C/W
	SOT-223 T_{JA}	62.1	N/A	62.1	62.1	°C/W
	TO-3 T_{JA}	39	N/A	39	39	°C/W
	TO-263 T_{JA}	44.8	25.3	44.8	44.8	°C/W
0.5 A		LM78Mxx	UA78MxxC	UA78MxxI	LM341	
	Input voltage range	7.2 - 35	5.3 - 30	5.3 - 30	7.2 - 35	V
	Fixed output voltage option	5	3.3, 5, 6, 8, 9, 10, 12	3.3, 5	5	V
	Load regulation accuracy	4	3	3	4	%
	PSRR (120 Hz)	78	80	80	78	dB
	Recommended operating temperature	–40 - 125	0 - 125	–40 - 125	–40 - 125	°C
	TO-220 T_{JA}	22.6	19	19	22.6	°C/W
	SOT-223 T_{JA}	N/A	53	53	N/A	°C/W
	TO-3 T_{JA}	162.4	N/A	N/A	N/A	°C/W
	TO-252 Powerflex T_{JA}	N/A	28	28	N/A	°C/W
	TO-252 T_{JA}	38	30.3	30.3	N/A	°C/W
0.1 A		LM78LxxAC	LM78LxxAI, LM78LxxIT	UA78LxxC	UA78LxxI	
	Input voltage range	7.0 - 30	7.0 - 30	4.75 - 30	4.75 - 30	V
	Fixed output voltage option	5, 6.2, 12, 15	5, 9	2.6, 5, 6.2, 8, 9, 10, 12, 15	5	V
	Load regulation accuracy (A/non -A)	4	4	4, 8	4, 8	%
	PSRR (120 Hz)	62	62	51	51	dB
	Recommended operating temperature	0 - 125	–40 - 125	0 - 125	–40 - 125	°C
	SOT-89 T_{JA}	N/A	N/A	54.7	54.7	°C/W
	SO-8 T_{JA}	128.8	128.8	115	115	°C/W
	DSBGA T_{JA}	N/A	108.4	N/A	N/A	°C/W
	TO-92 T_{JA}	158.7	N/A	143.6	143.6	°C/W

Copyright © 2000–2020, Texas Instruments Incorporated

6 Pin Configuration and Functions

YPB Package
8-Pin DSBGA
Top View

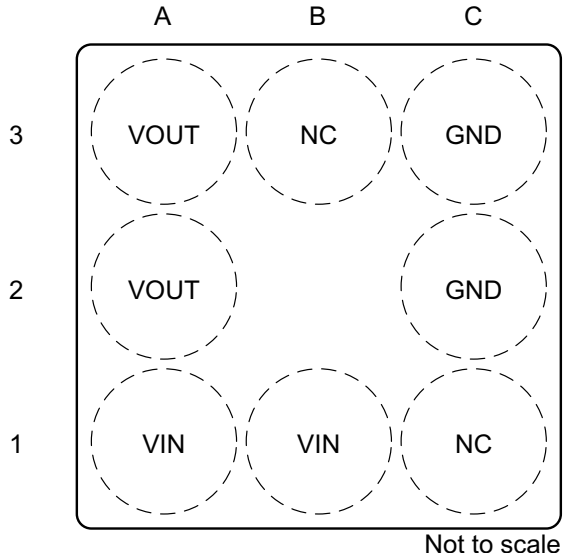

D Package
8-Pin SOIC
Top View

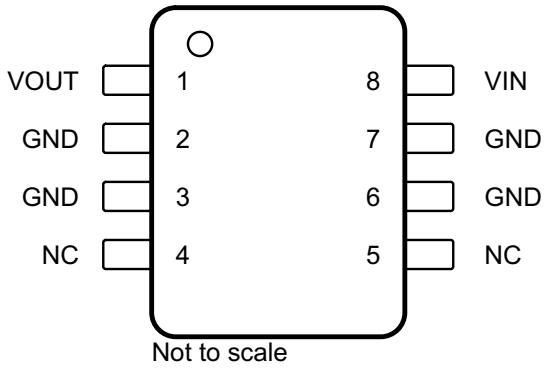

LP Package
3-Pin TO-92
Bottom View

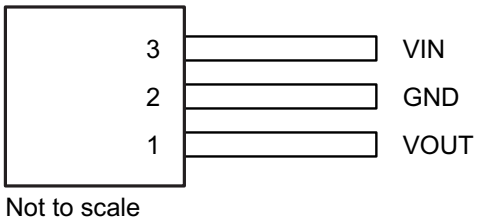

Pin Functions

PIN				I/O	DESCRIPTION
NAME	DSBGA	SOIC	TO-92		
GND	C2, C3	2, 3, 6, 7	2	—	Ground
NC	B3, C1	4, 5	—	—	No connection
VIN	A1, B1	8	3	I	Input supply voltage pin
VOUT	A2, A3	1	1	O	Output voltage pin

Copyright © 2000–2020, Texas Instruments Incorporated

7 Specifications

7.1 Absolute Maximum Ratings

over operating free-air temperature range (unless otherwise noted)[1][2]

		MIN	MAX	UNIT
Input voltage			35	V
Power dissipation		Internally limited		
Operating junction temperature, T_J	LM78LxxACZ (TO-92)	0	125	°C
	LM78LxxACM (SOIC)	0	125	
	LM78LxxAIM (SOIC)	–40	125	
	LM78LxxITP (thin DSBGA)	–40	85	
Storage temperature, T_{stg}		–65	150	°C

(1) Stresses beyond those listed under *Absolute Maximum Ratings* may cause permanent damage to the device. These are stress ratings only, which do not imply functional operation of the device at these or any other conditions beyond those indicated under *Recommended Operating Conditions*. Exposure to absolute-maximum-rated conditions for extended periods may affect device reliability.
(2) If Military/Aerospace specified devices are required, please contact the Texas Instruments Sales Office/Distributors for availability and specifications.

7.2 ESD Ratings

			VALUE	UNIT
$V_{(ESD)}$	Electrostatic discharge	Human-body model (HBM),[1]	±1000	V

(1) Human body model, 1.5 kΩ in series with 100 pF.

7.3 Recommended Operating Conditions

over operating free-air temperature range (unless otherwise noted)

			MIN	NOM	MAX	UNIT
	Input voltage				30	V
	Continuous output current				100	mA
T_J	Junction temperature	LM78LxxACZ (TO-92)	0		125	°C
		LM78LxxACM (SOIC)	0		125	
		LM78LxxAIM (SOIC)	–40		125	
		LM78LxxITP (DSBGA)	–40		85	

7.4 Thermal Information

THERMAL METRIC[1]		LM78Lxx			UNIT
		D (SOIC)	LP (TO-92)	YPB (DSBGA)	
		8 PINS	3 PINS	8 PINS	
$R_{\theta JA}$	Junction-to-ambient thermal resistance	128.8	158.7	108.4	°C/W
$R_{\theta JC(top)}$	Junction-to-case (top) thermal resistance	76	75.2	1.3	°C/W
$R_{\theta JB}$	Junction-to-board thermal resistance	69.3	n/a	31.4	°C/W
ψ_{JT}	Junction-to-top characterization parameter	26.3	30.2	4.5	°C/W
ψ_{JB}	Junction-to-board characterization parameter	68.8	138.2	31.4	°C/W
$R_{\theta JC(bot)}$	Junction-to-case (bottom) thermal resistance	—	—	—	°C/W

(1) For more information about traditional and new thermal metrics, see the *Semiconductor and IC Package Thermal Metrics* application report.

Copyright © 2000–2020, Texas Instruments Incorporated

7.5 Electrical Characteristics — LM78L05

Typical values apply for T_J = 25°C, Minimum and Maximum limits apply for the entire operating temperature range of the package(1)(2), I_O = 40 mA, C_I = 0.33 µF, C_O = 0.1 µF, V_{IN} = 10 V (unless otherwise noted).

PARAMETER		TEST CONDITIONS	MIN	TYP	MAX	UNIT
V_O	Output voltage	T_J = 25°C	4.8	5	5.2	V
		V_{IN} = 7 V to 20 V, I_O = 1 mA to 40 mA(3)	4.75		5.25	
		I_O = 1 mA to 70 mA(3)	4.75		5.25	
ΔV_O	Line regulation	V_{IN} = 7 V to 20 V, T_J = 25°C		18	75	mV
		V_{IN} = 8 V to 20 V, T_J = 25°C		10	54	
	Load regulation	I_O = 1 mA to 100 mA, T_J = 25°C		20	60	
		I_O = 1 mA to 40 mA, T_J = 25°C		5	30	
I_Q	Quiescent current	T_J = 25°C		3	5	mA
ΔI_Q	Quiescent current change	V_{IN} = 8 V to 20 V			1	mA
		I_O = 1 mA to 40 mA			0.1	
V_n	Output noise voltage	f = 10 Hz to 100 kHz(4)		40		µV
$\Delta V_{IN}/\Delta V_O$	Ripple rejection	f = 120 Hz, V_{IN} = 8 V to 16 V, T_J = 25°C	47	62		dB
I_{PK}	Peak output current			140		mA
$\Delta V_O/\Delta T$	Average output voltage temperature coefficient	I_O = 5 mA		–0.65		mV/°C
$V_{IN(MIN)}$	Minimum value of input voltage required to maintain line regulation	T_J = 25°C		6.7	7	V

(1) For the operating ranges of each package, see *Absolute Maximum Ratings*.
(2) Limits are ensured by production testing or correlation techniques using standard Statistical Quality Control (SQC) methods.
(3) Power dissipation ≤ 0.75 W.
(4) Recommended minimum load capacitance of 0.01 µF to limit high-frequency noise.

7.6 Electrical Characteristics — LM78L09

Typical values apply for T_J = 25°C, Minimum and Maximum limits apply for the entire operating temperature range of the package(1)(2), I_O = 40 mA, C_I = 0.33 µF, C_O = 0.1 µF, V_{IN} = 15 V (unless otherwise noted).

PARAMETER		TEST CONDITIONS	MIN	TYP	MAX	UNIT
V_O	Output voltage	T_J = 25°C	8.64	9	9.36	V
		V_{IN} = 11.5 V to 24 V, I_O = 1 mA to 40 mA(3)	8.55		9.45	
		I_O = 1 mA to 70 mA(3)	8.55		9.45	
ΔV_O	Line regulation	V_{IN} = 11.5 V to 24 V, T_J = 25°C		100	200	mV
		V_{IN} = 13 V to 24 V, T_J = 25°C		90	150	
	Load regulation	I_O = 1 mA to 100 mA, T_J = 25°C		20	90	
		I_O = 1 mA to 40 mA, T_J = 25°C		10	45	
I_Q	Quiescent current	T_J = 25°C		2	5.5	mA
ΔI_Q	Quiescent current change	V_{IN} = 11.5 V to 24 V			1.5	mA
		I_O = 1 mA to 40 mA			0.1	
V_n	Output noise voltage			70		µV
$\Delta V_{IN}/\Delta V_O$	Ripple rejection	f = 120 Hz, V_{IN} = 15 V to 25 V, T_J = 25°C	38	44		dB
I_{PK}	Peak output current			140		mA
$\Delta V_O/\Delta T$	Average output voltage temperature coefficient	I_O = 5 mA		–0.9		mV/°C
$V_{IN(MIN)}$	Minimum value of input voltage required to maintain line regulation			10.7		V

(1) For the operating ranges of each package, see *Absolute Maximum Ratings*.
(2) Limits are ensured by production testing or correlation techniques using standard Statistical Quality Control (SQC) methods.
(3) Power dissipation ≤ 0.75 W.

Copyright © 2000–2020, Texas Instruments Incorporated

7.7 Electrical Characteristics — LM78L12

Typical values apply for T_J = 25°C, Minimum and Maximum limits apply for the entire operating temperature range of the package(1)(2), I_O = 40 mA, C_I = 0.33 µF, C_O = 0.1 µF, V_{IN} = 19 V (unless otherwise noted).

PARAMETER		TEST CONDITIONS	MIN	TYP	MAX	UNIT
V_O	Output voltage	T_J = 25°C	11.5	12	12.5	V
		V_{IN} = 14.5 V to 27 V, I_O = 1 mA to 40 mA(3)	11.4		12.6	
		I_O = 1 mA to 70 mA(3)	11.4		12.6	
ΔV_O	Line regulation	V_{IN} = 14.5 V to 27 V, T_J = 25°C		30	180	mV
		V_{IN} = 16 V to 27 V, T_J = 25°C		20	110	
	Load regulation	I_O = 1 mA to 100 mA, T_J = 25°C		30	100	
		I_O = 1 mA to 40 mA, T_J = 25°C		10	50	
I_Q	Quiescent current	T_J = 25°C		3	5	mA
ΔI_Q	Quiescent current change	V_{IN} = 16 V to 27 V			1	mA
		I_O = 1 mA to 40 mA			0.1	
V_n	Output noise voltage			80		µV
$\Delta V_{IN}/\Delta V_O$	Ripple rejection	f = 120 Hz, V_{IN} = 15 V to 25 V, T_J = 25°C	40	54		dB
I_{PK}	Peak output current			140		mA
$\Delta V_O/\Delta T$	Average output voltage temperature coefficient	I_O = 5 mA		–1		mV/°C
$V_{IN(MIN)}$	Minimum value of input voltage required to maintain line regulation	T_J = 25°C		13.7	14.5	V

(1) For the operating ranges of each package, see *Absolute Maximum Ratings*.
(2) Limits are ensured by production testing or correlation techniques using standard Statistical Quality Control (SQC) methods.
(3) Power dissipation ≤ 0.75 W.

7.8 Electrical Characteristics — LM78L15

Typical values apply for T_J = 25°C, Minimum and Maximum limits apply for the entire operating temperature range of the package(1)(2), I_O = 40 mA, C_I = 0.33 µF, C_O = 0.1 µF, V_{IN} = 23 V (unless otherwise noted).

PARAMETER		TEST CONDITIONS	MIN	TYP	MAX	UNIT
V_O	Output voltage	T_J = 25°C	14.4	15	15.6	V
		V_{IN} = 17.5 V to 30 V, I_O = 1 mA to 40 mA(3)	14.25		15.75	
		I_O = 1 mA to 70 mA(3)	14.25		15.75	
ΔV_O	Line regulation	V_{IN} = 17.5 V to 30 V, T_J = 25°C		37	250	mV
		V_{IN} = 20 V to 30 V, T_J = 25°C		25	140	
	Load regulation	I_O = 1 mA to 100 mA, T_J = 25°C		35	150	
		I_O = 1 mA to 40 mA, T_J = 25°C		12	75	
I_Q	Quiescent current	T_J = 25°C		3	5	mA
ΔI_Q	Quiescent current change	V_{IN} =20 V to 30 V			1	mA
		I_O = 1 mA to 40 mA			0.1	
V_n	Output noise voltage			90		µV
$\Delta V_{IN}/\Delta V_O$	Ripple rejection	f = 120 Hz, V_{IN} = 18.5 V to 28.5 V, T_J = 25°C	37	51		dB
I_{PK}	Peak output current			140		mA
$\Delta V_O/\Delta T$	Average output voltage temperature coefficient	I_O = 5 mA		–1.3		mV/°C
$V_{IN(MIN)}$	Minimum value of input voltage required to maintain line regulation	T_J = 25°C		16.7	17.5	V

(1) For the operating ranges of each package, see *Absolute Maximum Ratings*.
(2) Limits are ensured by production testing or correlation techniques using standard Statistical Quality Control (SQC) methods.
(3) Power dissipation ≤ 0.75 W.

Copyright © 2000–2020, Texas Instruments Incorporated

7.9 Electrical Characteristics — LM78L62

Typical values apply for T_J = 25°C, Minimum and Maximum limits apply for the entire operating temperature range of the package(1)(2), I_O = 40 mA, C_I = 0.33 µF, C_O = 0.1 µF, V_{IN} = 12 V (unless otherwise noted).

PARAMETER		TEST CONDITIONS	MIN	TYP	MAX	UNIT
V_O	Output voltage	T_J = 25°C	5.95	6.2	6.45	V
		V_{IN} = 8.5 V to 20 V, I_O = 1 mA to 40 mA(3)	5.9		6.5	
		I_O = 1 mA to 70 mA(3)	5.9		6.5	
ΔV_O	Line regulation	V_{IN} = 8.5 V to 20 V, T_J = 25°C		65	175	mV
		V_{IN} = 9 V to 20 V, T_J = 25°C		55	125	
	Load regulation	I_O = 1 mA to 100 mA, T_J = 25°C		13	80	
		I_O = 1 mA to 40 mA, T_J = 25°C		6	40	
I_Q	Quiescent current	T_J = 25°C		2	5.5	mA
ΔI_Q	Quiescent current change	V_{IN} = 8 V to 20 V			1.5	mA
		I_O = 1 mA to 40 mA			0.1	
V_n	Output noise voltage	f = 10 Hz to 100 kHz(4)		50		µV
$\Delta V_{IN}/\Delta V_O$	Ripple rejection	f = 120 Hz, V_{IN} = 10 V to 20 V, T_J = 25°C	40	46		dB
I_{PK}	Peak output current			140		mA
$\Delta V_O/\Delta T$	Average output voltage temperature coefficient	I_O = 5 mA		–0.75		mV/°C
$V_{IN(MIN)}$	Minimum value of input voltage required to maintain line regulation			7.9		V

(1) For the operating ranges of each package, see *Absolute Maximum Ratings*.
(2) Limits are ensured by production testing or correlation techniques using standard Statistical Quality Control (SQC) methods.
(3) Power dissipation ≤ 0.75 W.
(4) Recommended minimum load capacitance of 0.01 µF to limit high-frequency noise.

Copyright © 2000–2020, Texas Instruments Incorporated

7.10 Typical Characteristics

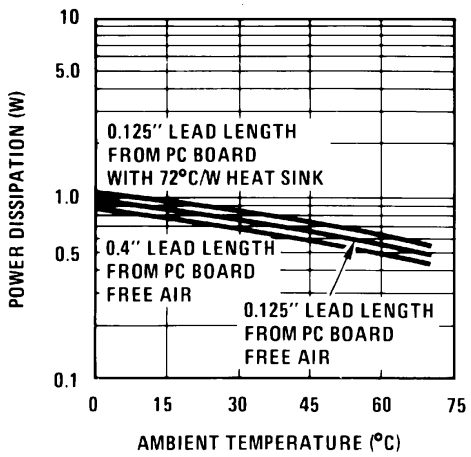

LP Package

Figure 1. Maximum Average Power Dissipation

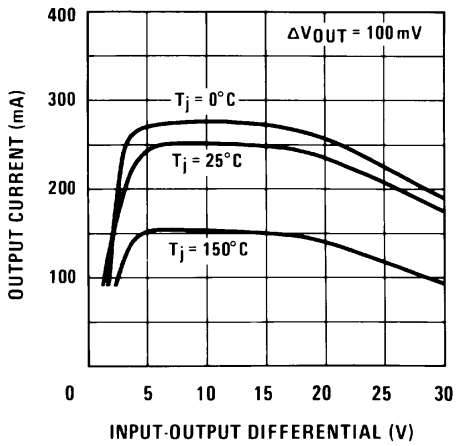

Figure 2. Peak Output Current

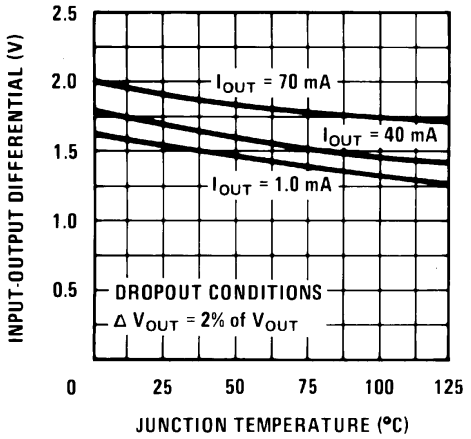

Figure 3. Dropout Voltage

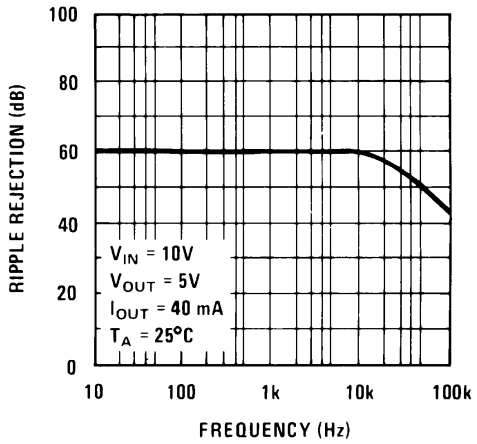

Figure 4. Ripple Rejection

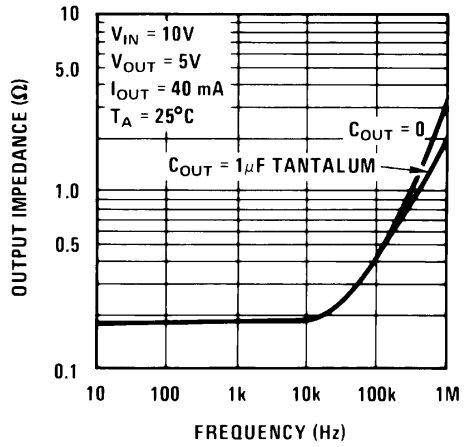

Figure 5. Output Impedance

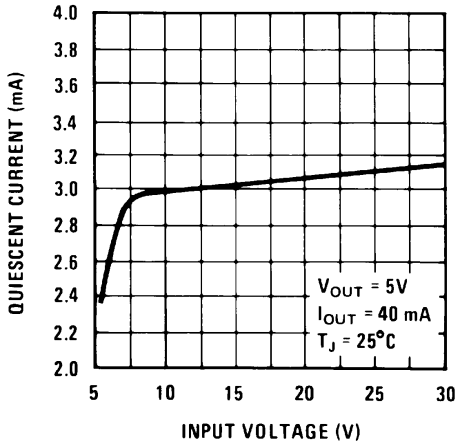

Figure 6. Quiescent Current

Typical Characteristics (continued)

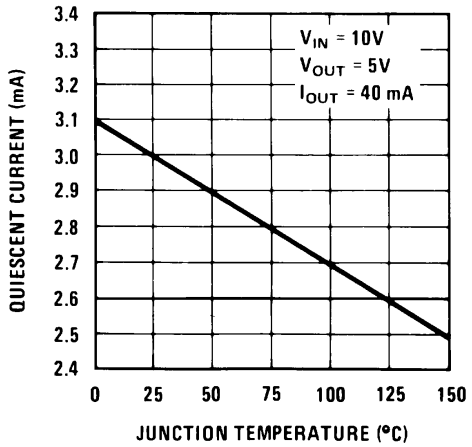

Figure 7. Quiescent Current

Copyright © 2000–2020, Texas Instruments Incorporated

8 Detailed Description

8.1 Overview

The LM78Lxx series of positive regulators is available in the following fixed output voltages: 5 V, 6.2 V, 8.2 V, 9 V, 12 V, and 15 V. The regulator can be configured to an adjustable output by connecting the GND pin to the center of a resistive voltage divider as shown in Figure 10. In this configuration, the fixed output voltage acts as the reference voltage across R1 allowing the output to be adjusted by changing the resistor.

8.2 Functional Block Diagram

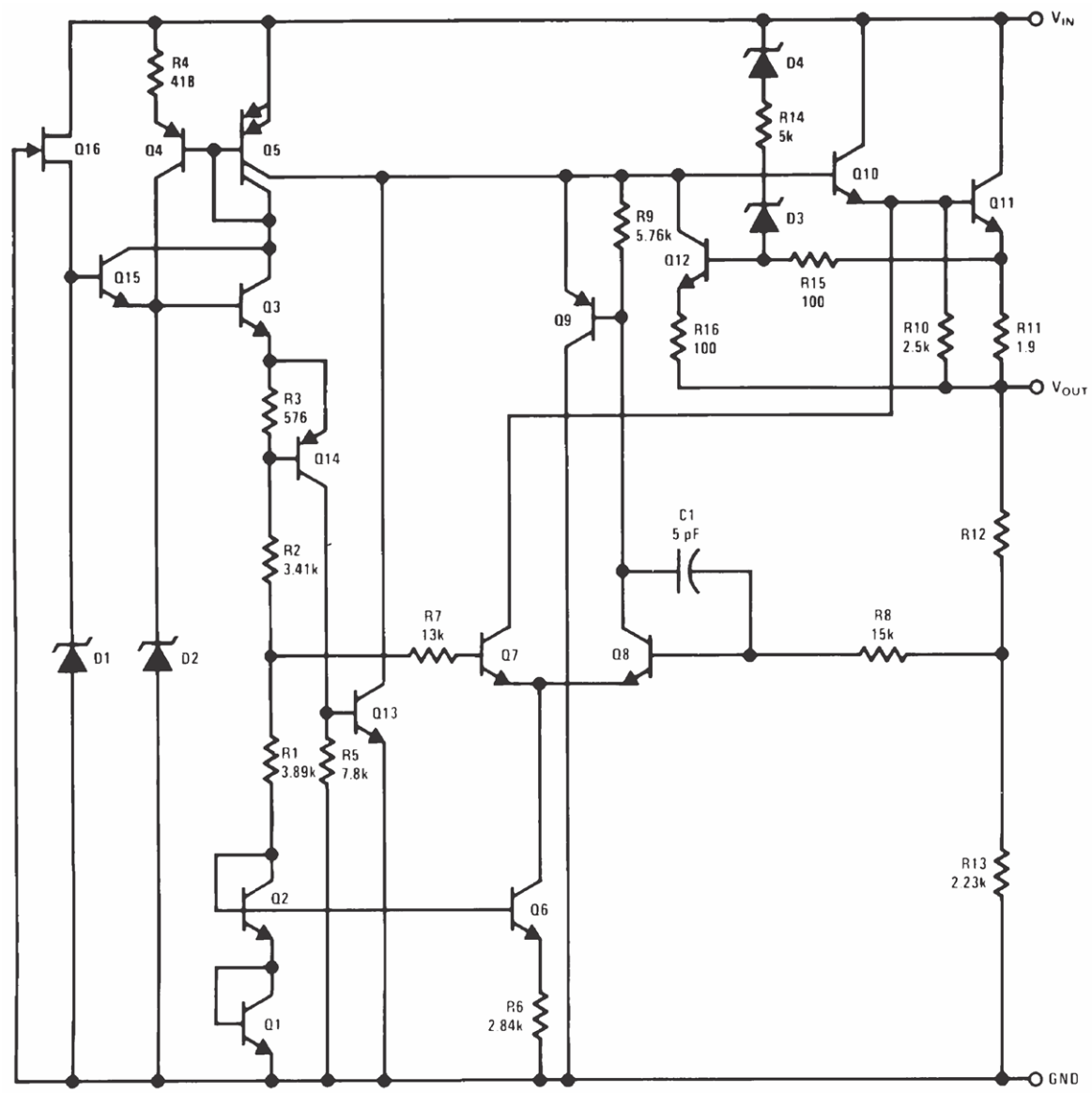

8.3 Feature Description

8.3.1 Load Regulation

These devices regulate the voltage between the VOUT and GND pins, and can be made adjustable by using a resistive voltage divider. The output voltage tolerance is ±5% over temperature.

8.3.2 Protection

The LM78Lxx series of regulators has internal thermal overload protection that automatically shuts off the device if the operating temperature becomes too high. There is also internal short-circuit current limit and output transistor safe area protection that shuts down the device if the output current becomes too high.

8.4 Device Functional Modes

8.4.1 Normal Operation

The VOUT pin sources current necessary to set the voltage on VOUT at a fixed voltage above the GND pin. See *Specifications* for V_O of each device.

8.4.2 Shutdown

The device automatically shuts down if the output current or its internal temperature becomes too high.

Copyright © 2000–2020, Texas Instruments Incorporated

9 Application and Implementation

NOTE

Information in the following applications sections is not part of the TI component specification, and TI does not warrant its accuracy or completeness. TI's customers are responsible for determining suitability of components for their purposes. Customers should validate and test their design implementation to confirm system functionality.

9.1 Application Information

These devices are versatile and high-performance regulators with a wide temperature range and tight line and load regulation. An input capacitor is required if the regulator is placed more than 3 inches from the power supply filter. TI recommends a minimum load capacitance of 0.01 µF to limit high frequency.

9.2 Typical Applications

9.2.1 Fixed Output Regulator

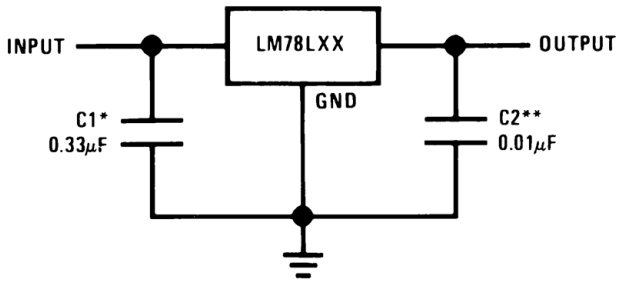

*Required if the regulator is located more than 3 inches from the power supply filter.

**Recommended minimum load capacitance of 0.01 µF to limit high-frequency noise.

Figure 8. Fixed Output Regulator Circuit

9.2.1.1 Design Requirements

The device component count is very minimal. No external components are usually required. However, TI recommends input or output capacitors depending on the distance between the device and the power supply and if extra filtering is needed at the output.

The output voltage is set based on the selection of the two resistors (R1 and R2), as shown in Figure 14.

9.2.1.2 Detailed Design Procedure

9.2.1.2.1 Input Capacitor

An input capacitor is required if the regulator is placed more than 3 inches from the power supply filter. A 0.33-µF capacitor on the input is suitable for most applications.

9.2.1.2.2 Output Capacitor

TI recommends a minimum load capacitance of 0.01 µF to limit high-frequency noise.

Typical Applications (continued)

9.2.1.3 Application Curve

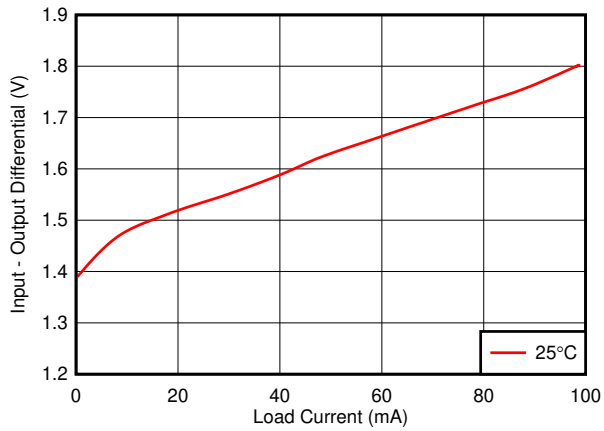

Figure 9. LM78Lxx Dropout

9.2.2 Other Application Circuits

Figure 10 to Figure 14 show application circuit examples using the LM78Lxx devices. Customers must fully validate and test these circuits before implementing a design based on these examples. Unless otherwise noted, the design procedures in *Fixed Output Regulator* are applicable to these designs.

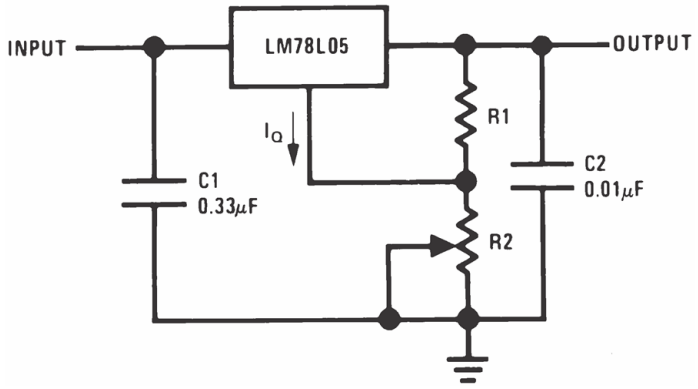

V_O = 5 V + (5 V / R1 + I_Q) × R2*

* The 5 V represents the fixed output voltage of the LM78L05. If using one of the other LM78Lxx devices, use that fixed output voltage value when calculating V_O.

I_Q < 5 V / (3 × R1)

Load regulation (L_R) of LM78L05 ≈ (R1 + R2) / R1

Figure 10. Adjustable Output Regulator Circuit

Copyright © 2000–2020, Texas Instruments Incorporated

Typical Applications (continued)

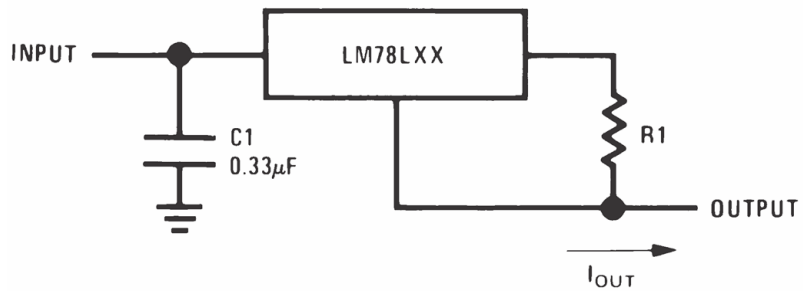

$I_{OUT} = (V_O / R1) + I_Q$

I_Q = 1.5 mA over line and load changes

Figure 11. Current Regulator Circuit

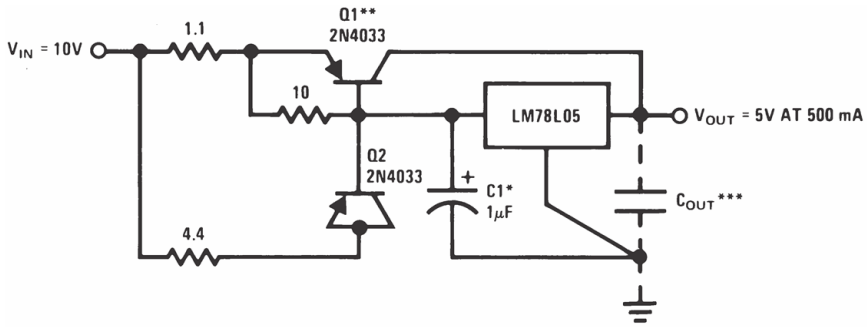

*Solid tantalum

**Heat sink Q1

***Optional: Improves ripple rejection and transient response.

Load Regulation = 0.6%, I_L = 0 mA to 250 mA pulsed with t_{ON} = 50 ms.

Figure 12. 5-V, 500-mA Regulator With Short-Circuit Protection Circuit

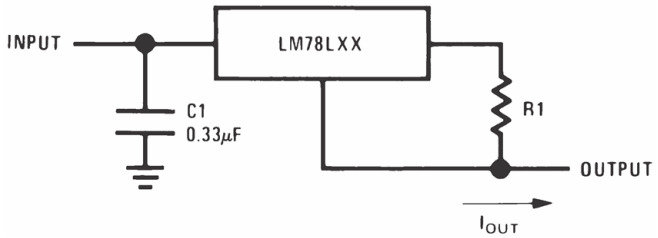

*Solid tantalum

Figure 13. ±15-V, 100-mA Dual Power Supply Circuit

Typical Applications (continued)

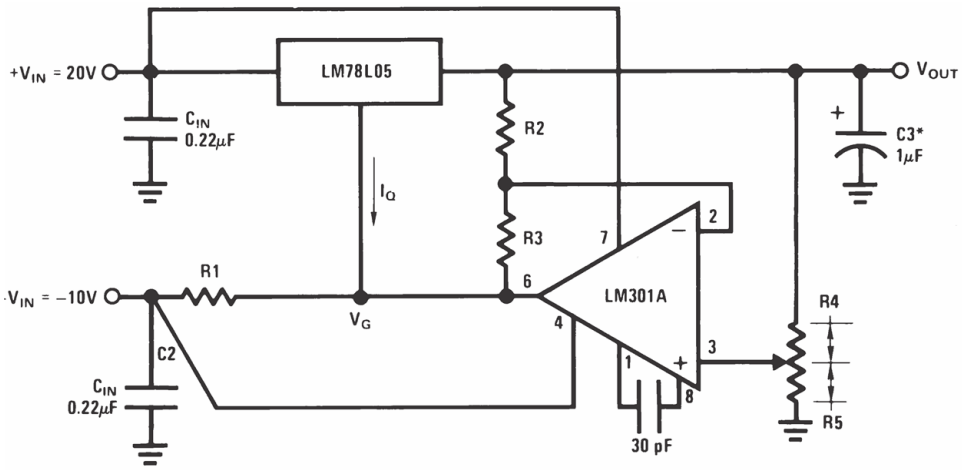

*Solid tantalum

$V_O = V_G + 5$ V, R1 = $(-V_{IN} / I_{Q(LM78L05)})$

$V_O = 5$ V (R2 / R4) for (R2 + R3) = (R4 + R5)

A 0.5-V output will correspond to (R2 / R4) = 0.1, (R3 / R4) = 0.9

Figure 14. Variable Output Regulator Circuit (0.5 V to 18 V)

10 Power Supply Recommendations

The linear regulator input supply must be well regulated and kept at a voltage level to not exceed the maximum input to output voltage differential allowed by the device. The minimum dropout voltage ($V_{IN} – V_O$) must be met with extra headroom when possible to keep the output well regulated. A 0.33-µF or higher capacitor must be placed at the input to bypass noise.

11 Layout

11.1 Layout Guidelines

For the best overall performance, some layout guidelines may be disregarded. Place all circuit components on the same side of the circuit board and as near as practical to the respective linear regulator pins. Traces must be kept short and wide to reduce the amount of parasitic elements in the system. The actual width and thickness of traces depends on the current carrying capability and heat dissipation required by the end system.

Copyright © 2000–2020, Texas Instruments Incorporated

11.2 Layout Example

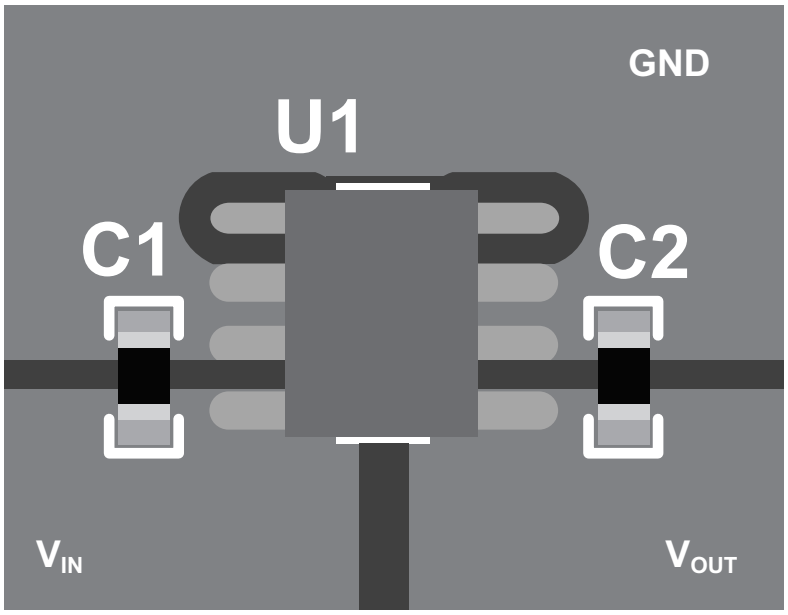

Figure 15. LM78Lxx Example Circuit Layout

12 Device and Documentation Support

12.1 Documentation Support

12.1.1 Related Documentation

For related documentation see the following:

- Texas Instruments, *UA78L00 Series Positive-Voltage Linear Regulators* data sheet
- Texas Instruments, *AN-1112 DSBGA Wafer Level Chip Scale Package* application note
- Texas Instruments, *TO-92 Packing Options/Ordering Instructions* application report

12.2 Receiving Notification of Documentation Updates

To receive notification of documentation updates, navigate to the device product folder on ti.com. In the upper right corner, click on *Alert me* to register and receive a weekly digest of any product information that has changed. For change details, review the revision history included in any revised document.

12.3 Support Resources

TI E2E™ support forums are an engineer's go-to source for fast, verified answers and design help — straight from the experts. Search existing answers or ask your own question to get the quick design help you need.

Linked content is provided "AS IS" by the respective contributors. They do not constitute TI specifications and do not necessarily reflect TI's views; see TI's Terms of Use.

12.4 Trademarks

E2E is a trademark of Texas Instruments.
All other trademarks are the property of their respective owners.

12.5 Electrostatic Discharge Caution

This integrated circuit can be damaged by ESD. Texas Instruments recommends that all integrated circuits be handled with appropriate precautions. Failure to observe proper handling and installation procedures can cause damage.

ESD damage can range from subtle performance degradation to complete device failure. Precision integrated circuits may be more susceptible to damage because very small parametric changes could cause the device not to meet its published specifications.

12.6 Glossary

SLYZ022 — *TI Glossary*.

This glossary lists and explains terms, acronyms, and definitions.

13 Mechanical, Packaging, and Orderable Information

The following pages include mechanical, packaging, and orderable information. This information is the most current data available for the designated devices. This data is subject to change without notice and revision of this document. For browser-based versions of this data sheet, refer to the left-hand navigation.

Copyright © 2000–2020, Texas Instruments Incorporated

PACKAGING INFORMATION

Orderable Device	Status (1)	Package Type	Package Drawing	Pins	Package Qty	Eco Plan (2)	Lead finish/ Ball material (6)	MSL Peak Temp (3)	Op Temp (°C)	Device Marking (4/5)	Samples
LM78L05ACM	NRND	SOIC	D	8	95	Non-RoHS & Green	Call TI	Level-1-235C-UNLIM	0 to 125	LM78L 05ACM	
LM78L05ACM/NOPB	ACTIVE	SOIC	D	8	95	RoHS & Green	SN	Level-1-260C-UNLIM	0 to 125	LM78L 05ACM	Samples
LM78L05ACMX	NRND	SOIC	D	8	2500	Non-RoHS & Green	Call TI	Level-1-235C-UNLIM	0 to 125	LM78L 05ACM	
LM78L05ACMX/NOPB	ACTIVE	SOIC	D	8	2500	RoHS & Green	SN	Level-1-260C-UNLIM	0 to 125	LM78L 05ACM	Samples
LM78L05ACZ/LFT1	ACTIVE	TO-92	LP	3	2000	RoHS & Green	SN	N / A for Pkg Type	0 to 125	LM78L 05ACZ	Samples
LM78L05ACZ/LFT3	ACTIVE	TO-92	LP	3	2000	RoHS & Green	SN	N / A for Pkg Type	0 to 125	LM78L 05ACZ	Samples
LM78L05ACZ/LFT4	ACTIVE	TO-92	LP	3	2000	RoHS & Green	SN	N / A for Pkg Type	0 to 125	LM78L 05ACZ	Samples
LM78L05ACZ/LFT7	ACTIVE	TO-92	LP	3	2000	RoHS & Green	SN	N / A for Pkg Type	0 to 125	LM78L 05ACZ	Samples
LM78L05ACZ/NOPB	ACTIVE	TO-92	LP	3	1800	RoHS & Green	Call TI	N / A for Pkg Type	0 to 125	LM78L 05ACZ	Samples
LM78L05AIM/NOPB	ACTIVE	SOIC	D	8	95	RoHS & Green	SN	Level-1-260C-UNLIM	-40 to 125	LM78L 05AM	Samples
LM78L05AIMX/NOPB	ACTIVE	SOIC	D	8	2500	RoHS & Green	SN	Level-1-260C-UNLIM	-40 to 125	LM78L 05AM	Samples
LM78L05ITP/NOPB	ACTIVE	DSBGA	YPB	8	250	RoHS & Green	SNAGCU	Level-1-260C-UNLIM	-40 to 85	P 03	Samples
LM78L05ITPX/NOPB	ACTIVE	DSBGA	YPB	8	3000	RoHS & Green	SNAGCU	Level-1-260C-UNLIM	-40 to 85	P 03	Samples
LM78L09ITPX/NOPB	ACTIVE	DSBGA	YPB	8	3000	RoHS & Green	SNAGCU	Level-1-260C-UNLIM	-40 to 85	P 02	Samples
LM78L12ACM	NRND	SOIC	D	8	95	Non-RoHS & Green	Call TI	Level-1-235C-UNLIM	0 to 125	LM78L 12ACM	
LM78L12ACM/NOPB	ACTIVE	SOIC	D	8	95	RoHS & Green	SN	Level-1-260C-UNLIM	0 to 125	LM78L 12ACM	Samples
LM78L12ACMX/NOPB	ACTIVE	SOIC	D	8	2500	RoHS & Green	SN	Level-1-260C-UNLIM	0 to 125	LM78L	Samples

Orderable Device	Status (1)	Package Type	Package Drawing	Pins	Package Qty	Eco Plan (2)	Lead finish/ Ball material (6)	MSL Peak Temp (3)	Op Temp (°C)	Device Marking (4/5)	Samples
										12ACM	
LM78L12ACZ/LFT3	ACTIVE	TO-92	LP	3	2000	RoHS & Green	SN	N / A for Pkg Type	0 to 125	LM78L 12ACZ	Samples
LM78L12ACZ/LFT4	ACTIVE	TO-92	LP	3	2000	RoHS & Green	SN	N / A for Pkg Type	0 to 125	LM78L 12ACZ	Samples
LM78L12ACZ/LFT7	ACTIVE	TO-92	LP	3	2000	RoHS & Green	SN	N / A for Pkg Type	0 to 125	LM78L 12ACZ	Samples
LM78L12ACZ/NOPB	ACTIVE	TO-92	LP	3	1800	RoHS & Green	SN	N / A for Pkg Type	0 to 125	LM78L 12ACZ	Samples
LM78L15ACM	NRND	SOIC	D	8	95	Non-RoHS & Green	Call TI	Level-1-235C-UNLIM	0 to 125	LM78L 15ACM	
LM78L15ACM/NOPB	ACTIVE	SOIC	D	8	95	RoHS & Green	SN	Level-1-260C-UNLIM	0 to 125	LM78L 15ACM	Samples
LM78L15ACMX	NRND	SOIC	D	8	2500	Non-RoHS & Green	Call TI	Level-1-235C-UNLIM	0 to 125	LM78L 15ACM	
LM78L15ACMX/NOPB	ACTIVE	SOIC	D	8	2500	RoHS & Green	SN	Level-1-260C-UNLIM	0 to 125	LM78L 15ACM	Samples
LM78L15ACZ/LFT4	ACTIVE	TO-92	LP	3	2000	RoHS & Green	SN	N / A for Pkg Type	0 to 125	LM78L 15ACZ	Samples
LM78L15ACZ/NOPB	ACTIVE	TO-92	LP	3	1800	RoHS & Green	SN	N / A for Pkg Type	0 to 125	LM78L 15ACZ	Samples
LM78L62ACZ/NOPB	ACTIVE	TO-92	LP	3	1800	RoHS & Green	SN	N / A for Pkg Type	0 to 125	LM78L 62ACZ	Samples

(1) The marketing status values are defined as follows:
ACTIVE: Product device recommended for new designs.
LIFEBUY: TI has announced that the device will be discontinued, and a lifetime-buy period is in effect.
NRND: Not recommended for new designs. Device is in production to support existing customers, but TI does not recommend using this part in a new design.
PREVIEW: Device has been announced but is not in production. Samples may or may not be available.
OBSOLETE: TI has discontinued the production of the device.

(2) **RoHS:** TI defines "RoHS" to mean semiconductor products that are compliant with the current EU RoHS requirements for all 10 RoHS substances, including the requirement that RoHS substance do not exceed 0.1% by weight in homogeneous materials. Where designed to be soldered at high temperatures, "RoHS" products are suitable for use in specified lead-free processes. TI may reference these types of products as "Pb-Free".
RoHS Exempt: TI defines "RoHS Exempt" to mean products that contain lead but are compliant with EU RoHS pursuant to a specific EU RoHS exemption.
Green: TI defines "Green" to mean the content of Chlorine (Cl) and Bromine (Br) based flame retardants meet JS709B low halogen requirements of <=1000ppm threshold. Antimony trioxide based flame retardants must also meet the <=1000ppm threshold requirement.

(3) MSL, Peak Temp. - The Moisture Sensitivity Level rating according to the JEDEC industry standard classifications, and peak solder temperature.

(4) There may be additional marking, which relates to the logo, the lot trace code information, or the environmental category on the device.

(5) Multiple Device Markings will be inside parentheses. Only one Device Marking contained in parentheses and separated by a "~" will appear on a device. If a line is indented then it is a continuation of the previous line and the two combined represent the entire Device Marking for that device.

(6) Lead finish/Ball material - Orderable Devices may have multiple material finish options. Finish options are separated by a vertical ruled line. Lead finish/Ball material values may wrap to two lines if the finish value exceeds the maximum column width.

Important Information and Disclaimer: The information provided on this page represents TI's knowledge and belief as of the date that it is provided. TI bases its knowledge and belief on information provided by third parties, and makes no representation or warranty as to the accuracy of such information. Efforts are underway to better integrate information from third parties. TI has taken and continues to take reasonable steps to provide representative and accurate information but may not have conducted destructive testing or chemical analysis on incoming materials and chemicals. TI and TI suppliers consider certain information to be proprietary, and thus CAS numbers and other limited information may not be available for release.

In no event shall TI's liability arising out of such information exceed the total purchase price of the TI part(s) at issue in this document sold by TI to Customer on an annual basis.

TAPE AND REEL INFORMATION

REEL DIMENSIONS

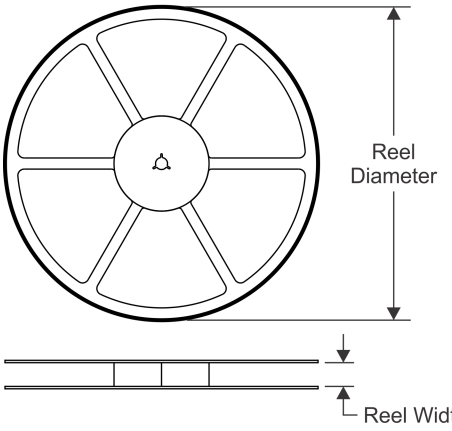

TAPE DIMENSIONS

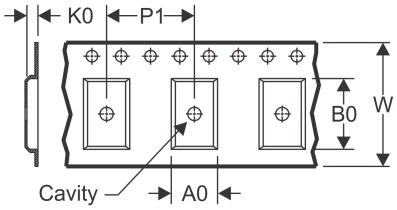

A0	Dimension designed to accommodate the component width
B0	Dimension designed to accommodate the component length
K0	Dimension designed to accommodate the component thickness
W	Overall width of the carrier tape
P1	Pitch between successive cavity centers

QUADRANT ASSIGNMENTS FOR PIN 1 ORIENTATION IN TAPE

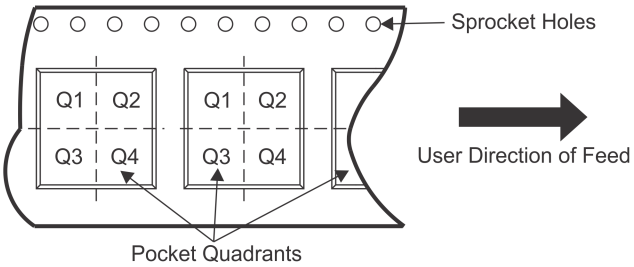

*All dimensions are nominal

Device	Package Type	Package Drawing	Pins	SPQ	Reel Diameter (mm)	Reel Width W1 (mm)	A0 (mm)	B0 (mm)	K0 (mm)	P1 (mm)	W (mm)	Pin1 Quadrant
LM78L05ACMX	SOIC	D	8	2500	330.0	12.4	6.5	5.4	2.0	8.0	12.0	Q1
LM78L05ACMX/NOPB	SOIC	D	8	2500	330.0	12.4	6.5	5.4	2.0	8.0	12.0	Q1
LM78L05AIMX/NOPB	SOIC	D	8	2500	330.0	12.4	6.5	5.4	2.0	8.0	12.0	Q1
LM78L05ITP/NOPB	DSBGA	YPB	8	250	178.0	8.4	1.5	1.5	0.66	4.0	8.0	Q1
LM78L05ITPX/NOPB	DSBGA	YPB	8	3000	178.0	8.4	1.5	1.5	0.66	4.0	8.0	Q1
LM78L09ITPX/NOPB	DSBGA	YPB	8	3000	178.0	8.4	1.5	1.5	0.66	4.0	8.0	Q1
LM78L12ACMX/NOPB	SOIC	D	8	2500	330.0	12.4	6.5	5.4	2.0	8.0	12.0	Q1
LM78L15ACMX	SOIC	D	8	2500	330.0	12.4	6.5	5.4	2.0	8.0	12.0	Q1
LM78L15ACMX/NOPB	SOIC	D	8	2500	330.0	12.4	6.5	5.4	2.0	8.0	12.0	Q1

TAPE AND REEL BOX DIMENSIONS

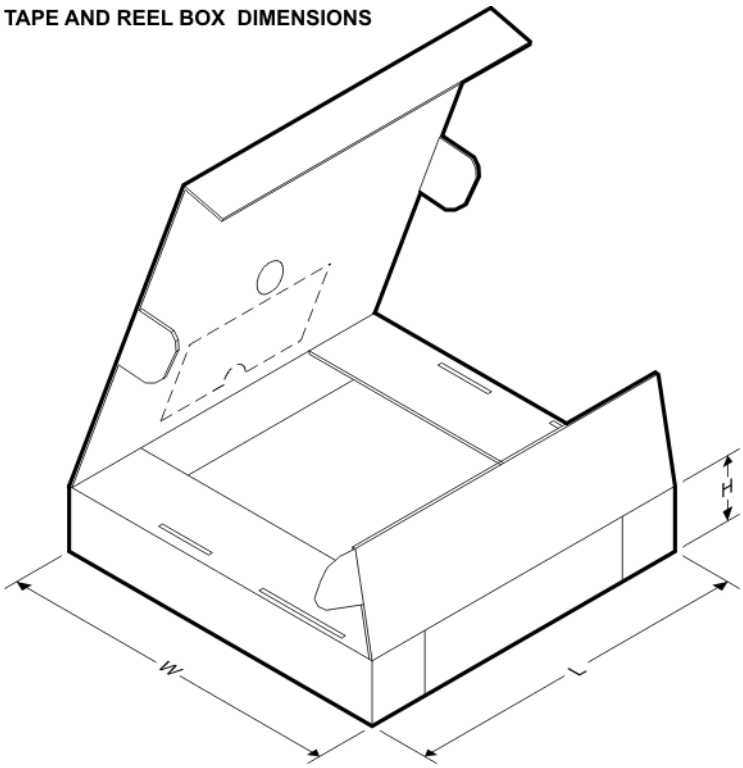

*All dimensions are nominal

Device	Package Type	Package Drawing	Pins	SPQ	Length (mm)	Width (mm)	Height (mm)
LM78L05ACMX	SOIC	D	8	2500	367.0	367.0	35.0
LM78L05ACMX/NOPB	SOIC	D	8	2500	367.0	367.0	35.0
LM78L05AIMX/NOPB	SOIC	D	8	2500	367.0	367.0	35.0
LM78L05ITP/NOPB	DSBGA	YPB	8	250	208.0	191.0	35.0
LM78L05ITPX/NOPB	DSBGA	YPB	8	3000	208.0	191.0	35.0
LM78L09ITPX/NOPB	DSBGA	YPB	8	3000	208.0	191.0	35.0
LM78L12ACMX/NOPB	SOIC	D	8	2500	367.0	367.0	35.0
LM78L15ACMX	SOIC	D	8	2500	367.0	367.0	35.0
LM78L15ACMX/NOPB	SOIC	D	8	2500	367.0	367.0	35.0

TUBE

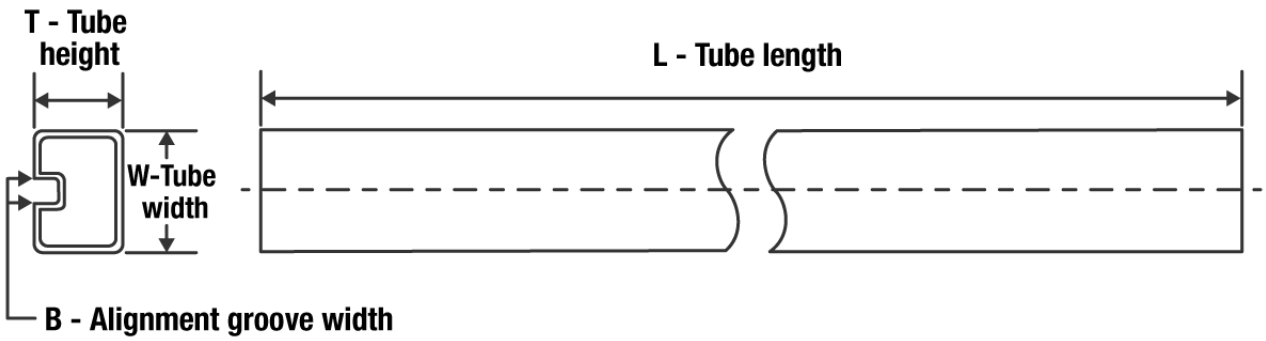

*All dimensions are nominal

Device	Package Name	Package Type	Pins	SPQ	L (mm)	W (mm)	T (µm)	B (mm)
LM78L05ACM	D	SOIC	8	95	495	8	4064	3.05
LM78L05ACM	D	SOIC	8	95	495	8	4064	3.05
LM78L05ACM/NOPB	D	SOIC	8	95	495	8	4064	3.05
LM78L05AIM/NOPB	D	SOIC	8	95	495	8	4064	3.05
LM78L12ACM	D	SOIC	8	95	495	8	4064	3.05
LM78L12ACM	D	SOIC	8	95	495	8	4064	3.05
LM78L12ACM/NOPB	D	SOIC	8	95	495	8	4064	3.05
LM78L15ACM	D	SOIC	8	95	495	8	4064	3.05
LM78L15ACM	D	SOIC	8	95	495	8	4064	3.05
LM78L15ACM/NOPB	D	SOIC	8	95	495	8	4064	3.05

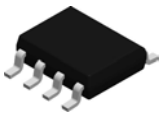

PACKAGE OUTLINE

D0008A

SOIC - 1.75 mm max height

SMALL OUTLINE INTEGRATED CIRCUIT

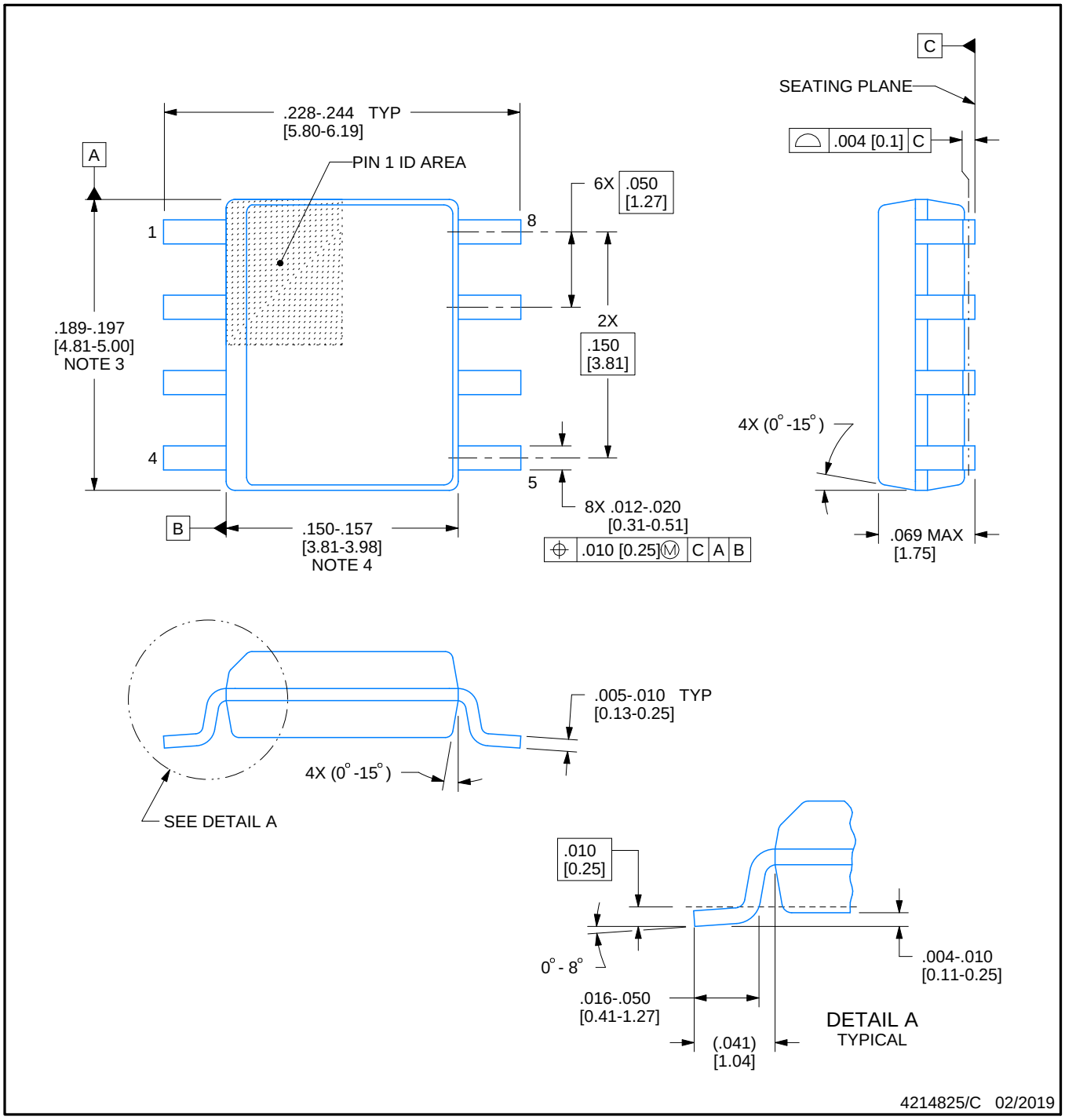

NOTES:

1. Linear dimensions are in inches [millimeters]. Dimensions in parenthesis are for reference only. Controlling dimensions are in inches. Dimensioning and tolerancing per ASME Y14.5M.
2. This drawing is subject to change without notice.
3. This dimension does not include mold flash, protrusions, or gate burrs. Mold flash, protrusions, or gate burrs shall not exceed .006 [0.15] per side.
4. This dimension does not include interlead flash.
5. Reference JEDEC registration MS-012, variation AA.

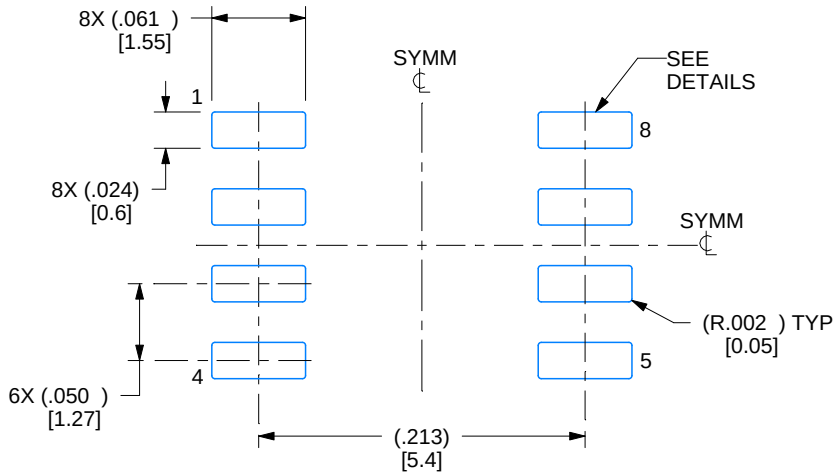

LAND PATTERN EXAMPLE
EXPOSED METAL SHOWN
SCALE:8X

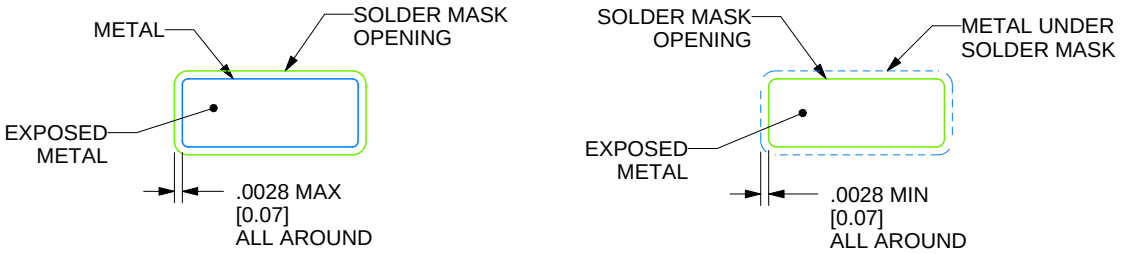

SOLDER MASK DETAILS

4214825/C 02/2019

NOTES: (continued)

6. Publication IPC-7351 may have alternate designs.
7. Solder mask tolerances between and around signal pads can vary based on board fabrication site.

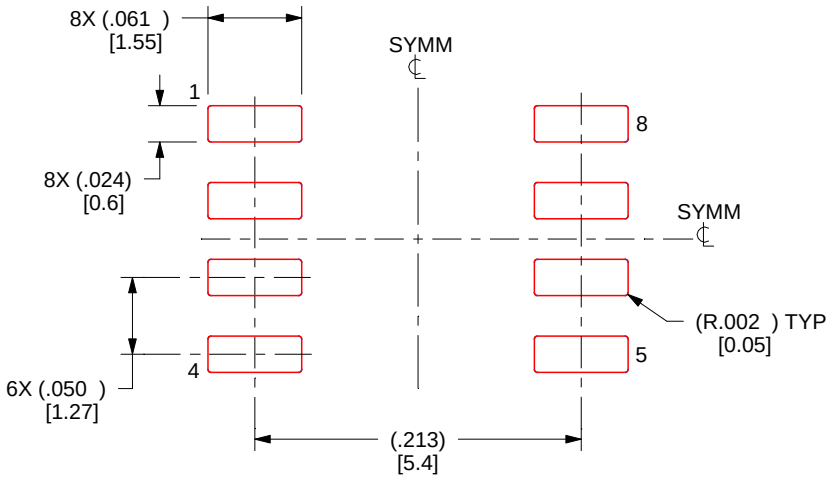

SOLDER PASTE EXAMPLE
BASED ON .005 INCH [0.125 MM] THICK STENCIL
SCALE:8X

4214825/C 02/2019

NOTES: (continued)

8. Laser cutting apertures with trapezoidal walls and rounded corners may offer better paste release. IPC-7525 may have alternate design recommendations.
9. Board assembly site may have different recommendations for stencil design.

Images above are just a representation of the package family, actual package may vary.
Refer to the product data sheet for package details.

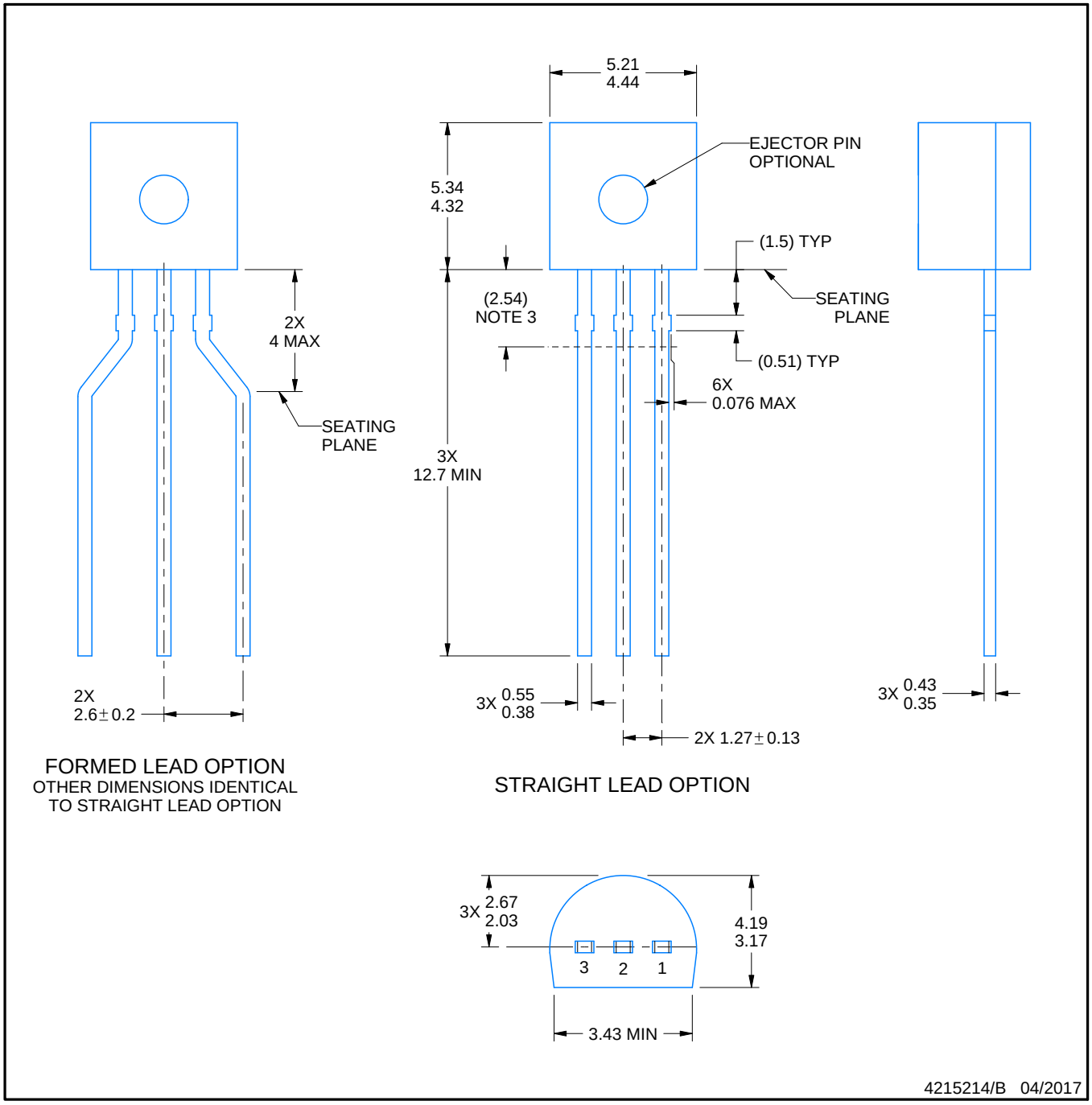

NOTES:

1. All linear dimensions are in millimeters. Any dimensions in parenthesis are for reference only. Dimensioning and tolerancing per ASME Y14.5M.
2. This drawing is subject to change without notice.
3. Lead dimensions are not controlled within this area.
4. Reference JEDEC TO-226, variation AA.
5. Shipping method:
   a. Straight lead option available in bulk pack only.
   b. Formed lead option available in tape and reel or ammo pack.
   c. Specific products can be offered in limited combinations of shipping medium and lead options.
   d. Consult product folder for more information on available options.

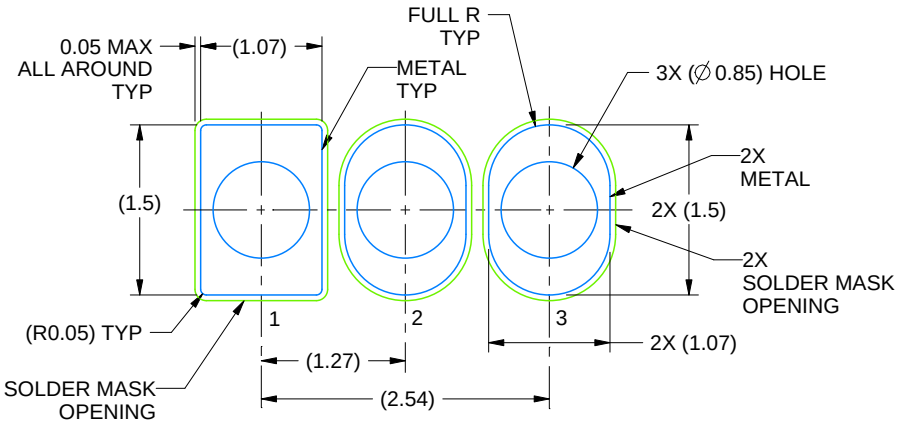

LAND PATTERN EXAMPLE
STRAIGHT LEAD OPTION
NON-SOLDER MASK DEFINED
SCALE:15X

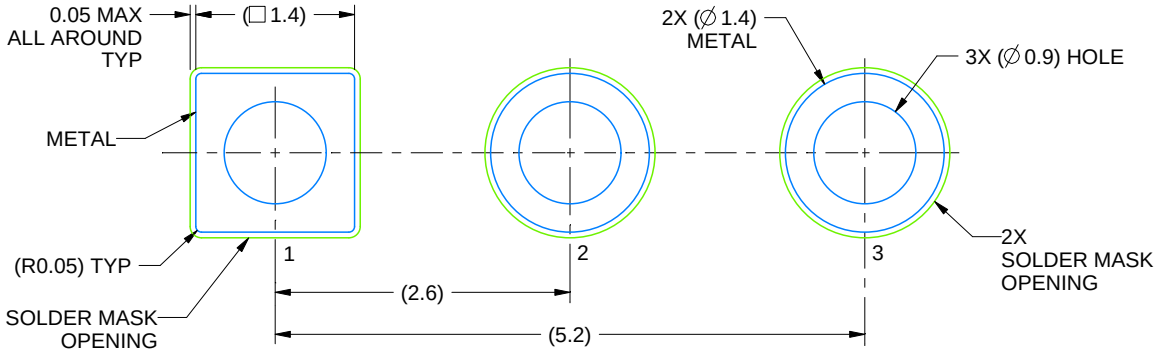

LAND PATTERN EXAMPLE
FORMED LEAD OPTION
NON-SOLDER MASK DEFINED
SCALE:15X

4215214/B 04/2017

TO-92

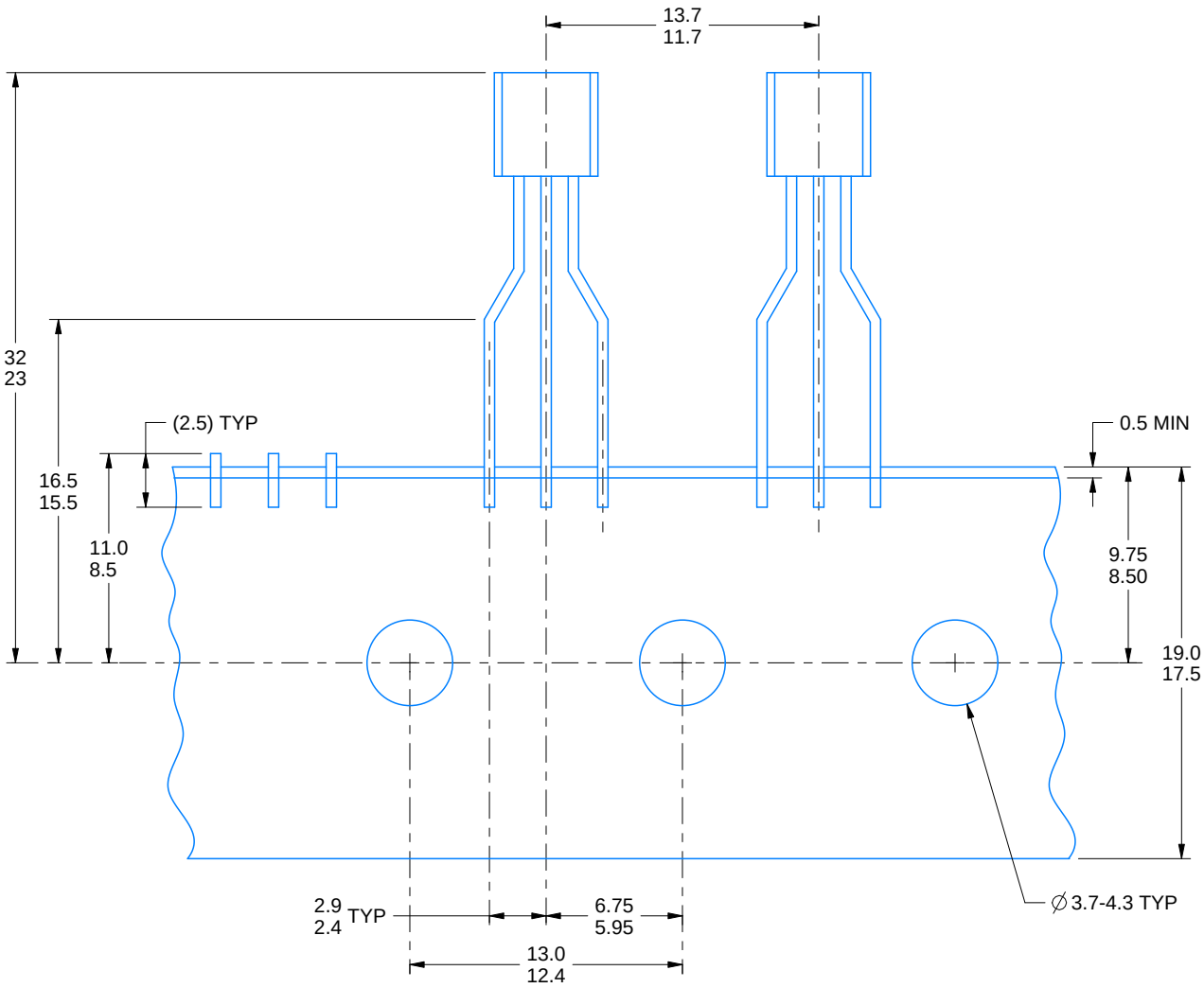

FOR FORMED LEAD OPTION PACKAGE

4215214/B 04/2017

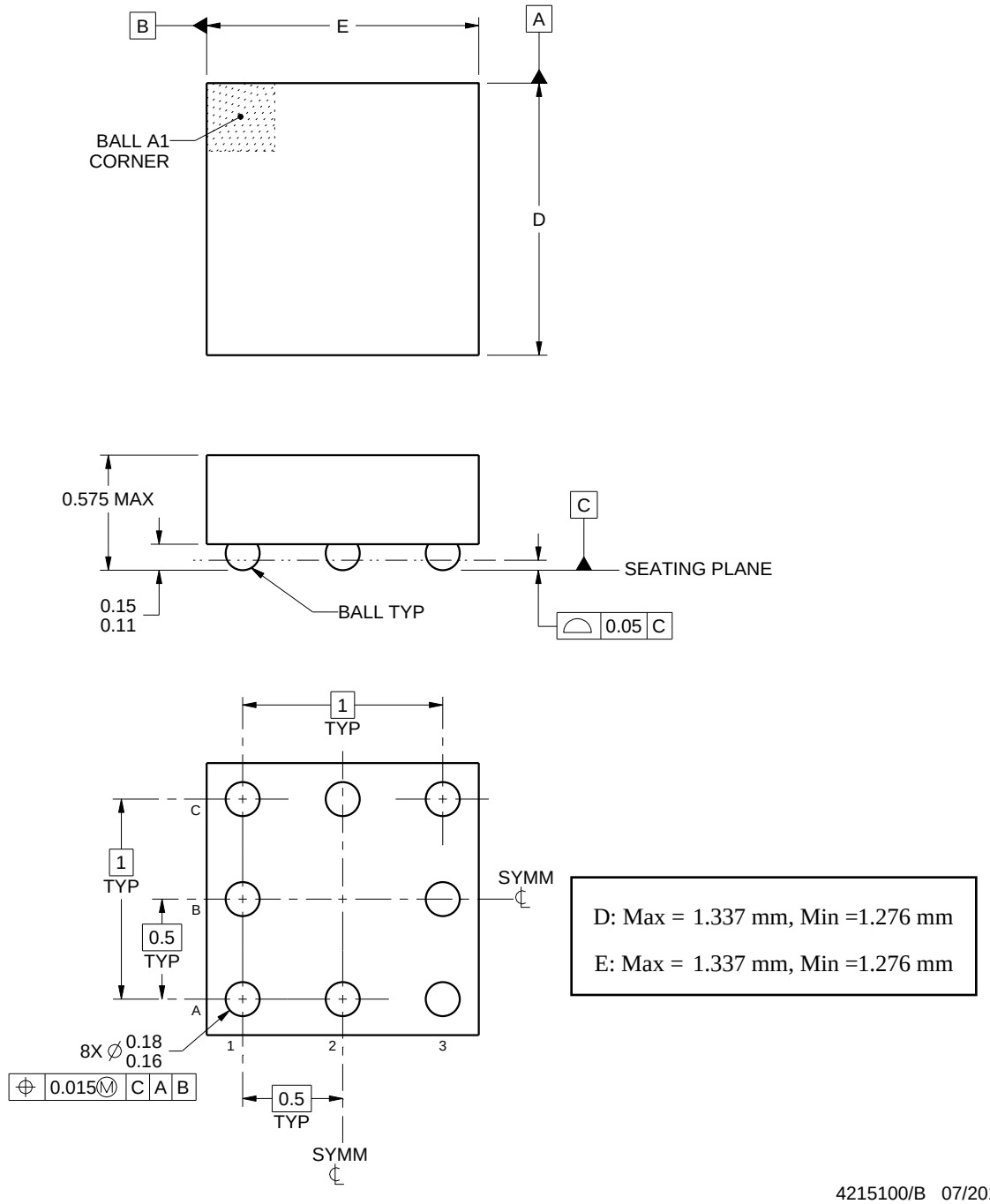

NOTES:

1. All linear dimensions are in millimeters. Any dimensions in parenthesis are for reference only. Dimensioning and tolerancing per ASME Y14.5M.
2. This drawing is subject to change without notice.

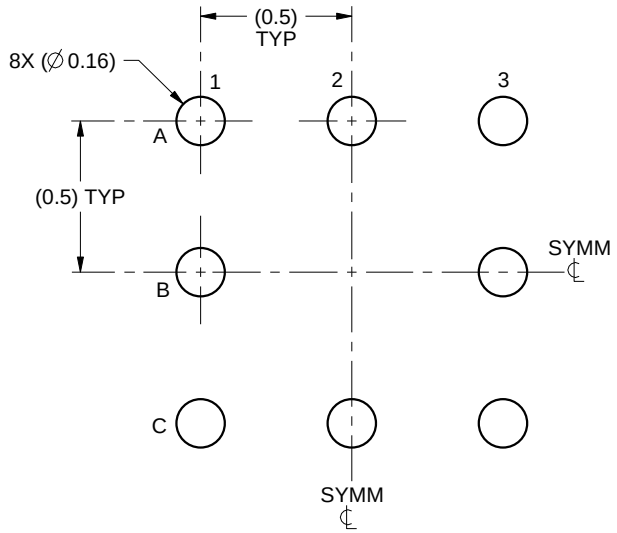

LAND PATTERN EXAMPLE
SCALE:40X

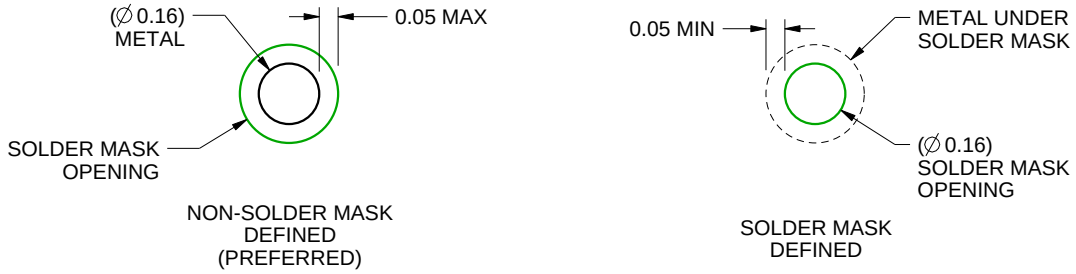

SOLDER MASK DETAILS
NOT TO SCALE

4215100/B 07/2016

NOTES: (continued)

3. Final dimensions may vary due to manufacturing tolerance considerations and also routing constraints.
   See Texas Instruments Literature No. SNVA009 (www.ti.com/lit/snva009).

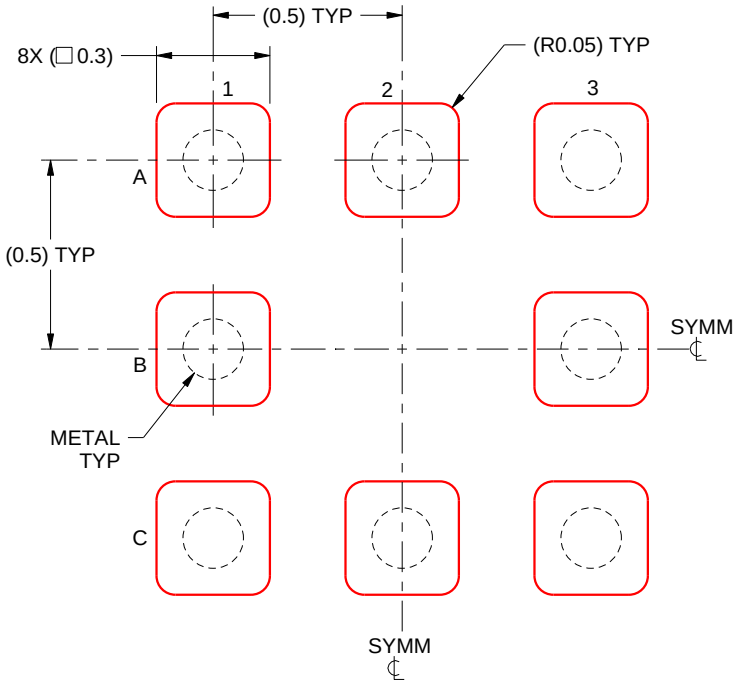

SOLDER PASTE EXAMPLE
BASED ON 0.125mm THICK STENCIL
SCALE:50X

4215100/B 07/2016

NOTES: (continued)

4. Laser cutting apertures with trapezoidal walls and rounded corners may offer better paste release.

IMPORTANT NOTICE AND DISCLAIMER

TI PROVIDES TECHNICAL AND RELIABILITY DATA (INCLUDING DATA SHEETS), DESIGN RESOURCES (INCLUDING REFERENCE DESIGNS), APPLICATION OR OTHER DESIGN ADVICE, WEB TOOLS, SAFETY INFORMATION, AND OTHER RESOURCES “AS IS” AND WITH ALL FAULTS, AND DISCLAIMS ALL WARRANTIES, EXPRESS AND IMPLIED, INCLUDING WITHOUT LIMITATION ANY IMPLIED WARRANTIES OF MERCHANTABILITY, FITNESS FOR A PARTICULAR PURPOSE OR NON-INFRINGEMENT OF THIRD PARTY INTELLECTUAL PROPERTY RIGHTS.

These resources are intended for skilled developers designing with TI products. You are solely responsible for (1) selecting the appropriate TI products for your application, (2) designing, validating and testing your application, and (3) ensuring your application meets applicable standards, and any other safety, security, regulatory or other requirements.

These resources are subject to change without notice. TI grants you permission to use these resources only for development of an application that uses the TI products described in the resource. Other reproduction and display of these resources is prohibited. No license is granted to any other TI intellectual property right or to any third party intellectual property right. TI disclaims responsibility for, and you will fully indemnify TI and its representatives against, any claims, damages, costs, losses, and liabilities arising out of your use of these resources.

TI’s products are provided subject to TI’s Terms of Sale or other applicable terms available either on ti.com or provided in conjunction with such TI products. TI’s provision of these resources does not expand or otherwise alter TI’s applicable warranties or warranty disclaimers for TI products.

TI objects to and rejects any additional or different terms you may have proposed.

Mailing Address: Texas Instruments, Post Office Box 655303, Dallas, Texas 75265
Copyright © 2022, Texas Instruments Incorporated