INA12x Precision, Low-Power Instrumentation Amplifiers

A newer version of this device is now available: INA828

1 Features

- A newer version of this device is now available: INA828
- Low offset voltage: 50 μV maximum
- Low drift: 0.5 μV/°C maximum
- Low Input Bias Current: 5 nA maximum
- High CMR: 120 dB minimum
- Inputs protected to ±40 V
- Wide supply range: ±2.25 V to ±18 V
- Low quiescent current: 700 μA
- Packages: 8-pin plastic DIP, SO-8

2 Applications

- Bridge amplifier
- Thermocouple amplifier
- RTD sensor amplifier
- Medical instrumentation
- Data acquisition

3 Description

The INA128 and INA129 are low-power, general purpose instrumentation amplifiers offering excellent accuracy. The versatile 3-op amp design and small size make these amplifiers ideal for a wide range of applications. Current-feedback input circuitry provides wide bandwidth even at high gain (200 kHz at G = 100).

A single external resistor sets any gain from 1 to 10,000. The INA128 provides an industry-standard gain equation; the INA129 gain equation is compatible with the AD620.

The INA12x is available in 8-pin plastic DIP and SO-8 surface-mount packages, specified for the –40°C to +85°C temperature range. The INA128 is also available in a dual configuration, the INA2128.

The upgraded INA828 offers a lower input bias current (0.6 nA maximum) and lower noise (7 nV/√Hz) at the same quiescent current. See the *Device Comparison Table* for a selection of precision instrumentation amplifiers from Texas Instruments.

Device Information(1)

PART NUMBER	PACKAGE	BODY SIZE (NOM)
INA128, INA129	SOIC (8)	3.91 mm × 4.90 mm
	PDIP (8)	6.35 mm × 9.81 mm

(1) For all available packages, see the package option addendum at the end of the data sheet.

Simplified Schematic

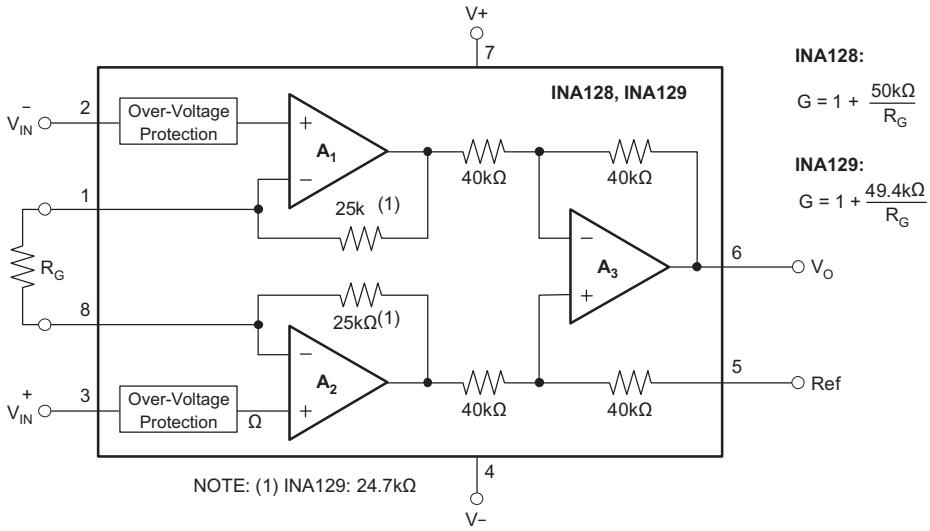

An IMPORTANT NOTICE at the end of this data sheet addresses availability, warranty, changes, use in safety-critical applications, intellectual property matters and other important disclaimers. PRODUCTION DATA.

Table of Contents

1 **Features** ... 1
2 **Applications** ... 1
3 **Description** ... 1
4 **Revision History** ... 2
5 **Device Comparison Table** ... 3
6 **Pin Configuration and Functions** ... 4
7 **Specifications** ... 4
7.1 Absolute Maximum Ratings ... 4
7.2 ESD Ratings ... 4
7.3 Recommended Operating Conditions ... 5
7.4 Thermal Information ... 5
7.5 Electrical Characteristics ... 5
7.6 Typical Characteristics ... 8
8 **Detailed Description** ... 12
8.1 Overview ... 12
8.2 Functional Block Diagram ... 12
8.3 Feature Description ... 12
8.4 Device Functional Modes ... 13
9 **Application and Implementation** ... 14
9.1 Application Information ... 14
9.2 Typical Application ... 14
10 **Power Supply Recommendations** ... 18
10.1 Low Voltage Operation ... 18
11 **Layout** ... 20
11.1 Layout Guidelines ... 20
11.2 Layout Example ... 20
12 **Device and Documentation Support** ... 21
12.1 Related Links ... 21
12.2 Receiving Notification of Documentation Updates 21
12.3 Community Resources ... 21
12.4 Trademarks ... 21
12.5 Electrostatic Discharge Caution ... 21
12.6 Glossary ... 21
13 **Mechanical, Packaging, and Orderable Information** ... 21

4 Revision History

NOTE: Page numbers for previous revisions may differ from page numbers in the current version.

Changes from Revision D (January 2018) to Revision E	Page
• Added information about the newer, upgraded INA828	1
• Added *Device Comparison Table*	3

Changes from Revision C (October 2015) to Revision D	Page
• Added top navigator icon for TI Reference Design	1
• Changed "±0.5±0/G" to "±0.5±20/G" in MAX column of Offset voltage RTI vs temperature row of *Electrical Characteristics*	5

Changes from Revision B (February 2005) to Revision C	Page
• Added *ESD Ratings* table, *Feature Description* section, *Device Functional Modes*, *Application and Implementation* section, *Power Supply Recommendations* section, *Layout* section, *Device and Documentation Support* section, and *Mechanical, Packaging, and Orderable Information* section.	1

Copyright © 1995–2019, Texas Instruments Incorporated

5 Device Comparison Table

DEVICE	DESCRIPTION	GAIN EQUATION	RG PINS AT PIN
INA828	50-µV Offset, 0.5 µV/°C V_{OS} drift, 7-nV/√Hz Noise, Low-Power, Precision Instrumentation Amplifier	G = 1 + 50 kΩ / RG	1, 8
INA819	35-µV Offset, 0.4 µV/°C V_{OS} drift, 8-nV/√Hz Noise, Low-Power, Precision Instrumentation Amplifier	G = 1 + 50 kΩ / RG	2, 3
INA821	35-µV Offset, 0.4 µV/°C V_{OS} drift, 7-nV/√Hz Noise, High-Bandwidth, Precision Instrumentation Amplifier	G = 1 + 49.4 kΩ / RG	2, 3
INA828	50-µV Offset, 0.5 µV/°C V_{OS} drift, 7-nV/√Hz Noise, Low-Power, Precision Instrumentation Amplifier	G = 1 + 50 kΩ / RG	1, 8
INA333	25-µV V_{OS}, 0.1 µV/°C V_{OS} drift, 1.8-V to 5-V, RRO, 50-µA I_Q, chopper-stabilized INA	G = 1 + 100 kΩ / RG	1, 8
PGA280	20-mV to ±10-V programmable gain IA with 3-V or 5-V differential output; analog supply up to ±18 V	digital programmable	N/A
INA159	G = 0.2 V differential amplifier for ±10-V to 3-V and 5-V conversion	G = 0.2 V/V	N/A
PGA112	Precision programmable gain op amp with SPI	digital programmable	N/A

Copyright © 1995–2019, Texas Instruments Incorporated

6 Pin Configuration and Functions

D and P Packages
8-Pin SOIC and PDIP
Top View

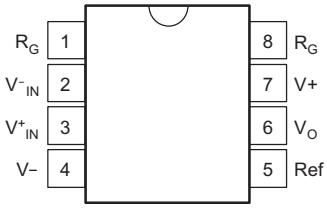

Pin Functions

PIN		I/O	DESCRIPTION
NAME	NO.		
REF	5	I	Reference input. This pin must be driven by low impedance or connected to ground.
R_G	1,8	—	Gain setting pin. For gains greater than 1, place a gain resistor between pin 1 and pin 8.
V-	4	—	Negative supply
V+	7	—	Positive supply
V_{IN-}	2	I	Negative input
V_{IN+}	3	I	Positive input
V_O	6	I	Output

7 Specifications

7.1 Absolute Maximum Ratings

over operating free-air temperature range (unless otherwise noted) (1)

	MIN	MAX	UNIT
Supply voltage		±18	V
Analog input voltage		±40	V
Output short circuit (to ground)		continuous	
Operating temperature	–40	125	°C
Junction temperature		150	°C
Lead temperature (soldering, 10 seconds)		300	°C
Storage temperature, T_{stg}	–55	125	°C

(1) Stresses beyond those listed under *Absolute Maximum Ratings* may cause permanent damage to the device. These are stress ratings only, which do not imply functional operation of the device at these or any other conditions beyond those indicated under *Recommended Operating Conditions*. Exposure to absolute-maximum-rated conditions for extended periods may affect device reliability.

7.2 ESD Ratings

			VALUE	UNIT
$V_{(ESD)}$	Electrostatic discharge	Human-body model (HBM), per ANSI/ESDA/JEDEC JS-001 (1)	±2000	V
		Charged-device model (CDM), per JEDEC specification JESD22-C101 (2)	±50	

(1) JEDEC document JEP155 states that 500-V HBM allows safe manufacturing with a standard ESD control process.
(2) JEDEC document JEP157 states that 250-V CDM allows safe manufacturing with a standard ESD control process.

Copyright © 1995–2019, Texas Instruments Incorporated

7.3 Recommended Operating Conditions

over operating free-air temperature range (unless otherwise noted)

	MIN	NOM	MAX	UNIT
V power supply	±2.25	±15	±18	V
Input common-mode voltage range for V_O = 0	V – 2 V		V + –2 V	
T_A operating temperature INA128-HT	–55		175	°C
T_A operating temperature INA129-HT	–55		210	°C

7.4 Thermal Information

THERMAL METRIC[1]		INA12x		UNIT
		D (SOIC)	P (PDIP)	
		8 PINS	8 PINS	
$R_{\theta JA}$	Junction-to-ambient thermal resistance	110	46.1	°C/W
$R_{\theta JC(top)}$	Junction-to-case (top) thermal resistance	57	34.1	°C/W
$R_{\theta JB}$	Junction-to-board thermal resistance	54	23.4	°C/W
ψ_{JT}	Junction-to-top characterization parameter	11	11.3	°C/W
ψ_{JB}	Junction-to-board characterization parameter	53	23.2	°C/W

(1) For more information about traditional and new thermal metrics, see the *Semiconductor and IC Package Thermal Metrics* application report.

7.5 Electrical Characteristics

at T_A = 25°C, V_S = ±15 V, and R_L = 10 kΩ (unless otherwise noted)

PARAMETER		TEST CONDITIONS		MIN	TYP	MAX	UNIT
INPUT							
Offset voltage, RTI	Initial	T_A = 25°C	INA128P, U INA129P, U		±10±100/G	±50±500/G	µV
			INA128PA, UA INA129PA, UA		±25±100/G	±125±1000/G	
	vs temperature	$T_A = T_{MIN}$ to T_{MAX}	INA128P, U INA129P, U		±0.2±2/G	±0.5±20/G	µV/°C
			INA128PA, UA INA129PA, UA		±0.2±5/G	±1±20/G	
	vs power supply	V_S = ±2.25 V to ±18 V	INA128P, U INA129P, U		±0.2±20/G	±1±100/G	µV/V
			INA128PA, UA INA129PA, UA			±2±200/G	
	Long-term stability				±0.1±3/g		µV/mo
Impedance	Differential				10^{10} || 2		Ω || pF
	Common mode				10^{11} || 9		
Common-mode voltage range[1]		V_O = 0 V		(V+) - 2	(V+) - 1.4		V
				(V…) + 2	(V–) + 1.7		
Safe input voltage						±40	V

(1) Input common-mode range varies with output voltage; see Typical Characteristics.

Copyright © 1995–2019, Texas Instruments Incorporated

Electrical Characteristics (continued)

at T_A = 25°C, V_S = ±15 V, and R_L = 10 kΩ (unless otherwise noted)

PARAMETER		TEST CONDITIONS			MIN	TYP	MAX	UNIT
Common-mode rejection		V_{CM} = ±13 V, ΔR_S = 1 kΩ	G = 1	INA128P, U INA129P, U	80	86		dB
				INA128PA, UA INA129PA, UA	73			
			G = 10	INA128P, U INA129P, U	100	106		
				INA128PA, UA INA129PA, UA	93			
			G = 100	INA128P, U INA129P, U	120	125		
				INA128PA, UA INA129PA, UA	110			
			G = 1000	INA128P, U INA129P, U	120	130		
				INA128PA, UA INA129PA, UA	110			
Bias current		INA128P, U INA129P, U				±2	±5	nA
		INA128PA, UA INA129PA, UA					±10	
Bias current vs temperature						±30		pA/°C
Offset current		INA128P, U INA129P, U				±1	±5	nA
		INA128PA, UA INA129PA, UA					±10	
Offset current vs temperature						±30		pA/°C
Noise voltage, RTI	f = 10 Hz	G = 1000, R_S = 0Ω				10		nV/√Hz
	f = 100 Hz					8		
	f = 1 kHz					8		
	f_B = 0.1 Hz to 10 Hz					0.2		μV_{PP}
Noise current	f = 10 Hz					0.9		pA/√Hz
	f = 1 kHz					0.3		
	F_B = 0.1 Hz to 10 Hz					30		pA_{PP}
GAIN(2)								
Gain equation	INA128					1 + (50 kΩ/R_G)		V/V
	INA129					1 + (49.4 kΩ/R_G)		
Range of gain					1		10000	V/V
Gain error			G = 1	INA128P, U INA129P, U		±0.01%	±0.024%	
				INA128PA, UA INA129PA, UA			±0.01%	
			G = 10	INA128P, U INA129P, U		±0.02%	±0.4%	
				INA128PA, UA INA129PA, UA			±0.5%	
			G = 100	INA128P, U INA129P, U		±0.05%	±0.5%	
				INA128PA, UA INA129PA, UA			±0.7%	
			G = 1000	INA128P, U INA129P, U		±0.5%	±1%	
				INA128PA, UA INA129PA, UA			±2%	

(2) Nonlinearity measurements in G = 1000 are dominated by noise. Typical non-linearity is ±0.001%.

Copyright © 1995–2019, Texas Instruments Incorporated

Electrical Characteristics (continued)

at T_A = 25°C, V_S = ±15 V, and R_L = 10 kΩ (unless otherwise noted)

PARAMETER		TEST CONDITIONS		MIN	TYP	MAX	UNIT
Gain vs temperature[3]		G = 1			±1	±10	ppm/°C
		50-kΩ (or 49.4-kΩ) Resistance[3][4]			±25	±100	
Nonlinearity		V_O = ±13.6 V, G = 1	INA128P, U INA129P, U		±0.0001	±0.001	% of FSR
			INA128PA, UA INA129PA, UA			±0.002	
		G = 10	INA128P, U INA129P, U		±0.0003	±0.002	
			INA128PA, UA INA129PA, UA			±0.004	
		G = 100	INA128P, U INA129P, U		±0.0005	±0.002	
			INA128PA, UA INA129PA, UA			±0.004	
		G = 1000			±0.001	/>	
OUTPUT[2]							
Voltage	Positive	R_L = 10 kΩ		(V+) – 1.4	(V+) – 0.9		V
	Negative	R_L = 10 kΩ		(V–) + 1.4	(V–) + 0.8		
Load capacitance stability					1000		pF
Short-circuit current					6/–15		mA
FREQUENCY RESPONSE							
Bandwidth, –3 dB		G = 1			1.3		MHz
		G = 10			700		kHz
		G = 100			200		
		G = 1000			20		
Slew rate		V_O = ±10 V, G = 10			4		V/µs
Settling time, 0.01%		G = 1			7		µs
		G = 10			7		
		G = 100			9		
		G = 1000			80		
Overload recovery		50% overdrive			4		µs
POWER SUPPLY							
Voltage range				±2.25	±15	±18	V
Current, total		V_{IN} = 0 V			±700	±750	µA
TEMPERATURE RANGE							
Specification				–40		85	°C
Operating				–40		125	°C

(3) Specified by wafer test.
(4) Temperature coefficient of the 50 kΩ (or 49.4 kΩ) term in the gain equation.

Copyright © 1995–2019, Texas Instruments Incorporated

7.6 Typical Characteristics

at T_A = 25°C and V_S = ±15 V (unless otherwise noted)

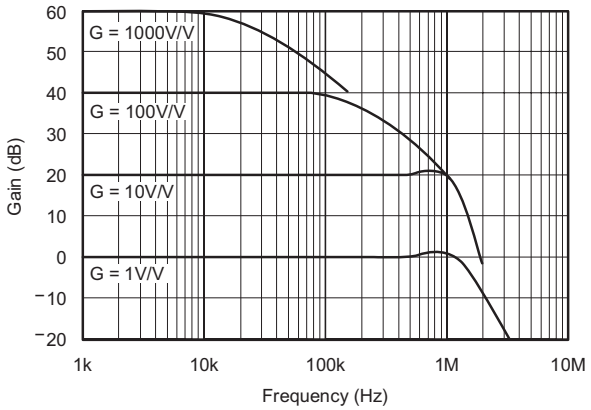

Figure 1. Gain vs Frequency

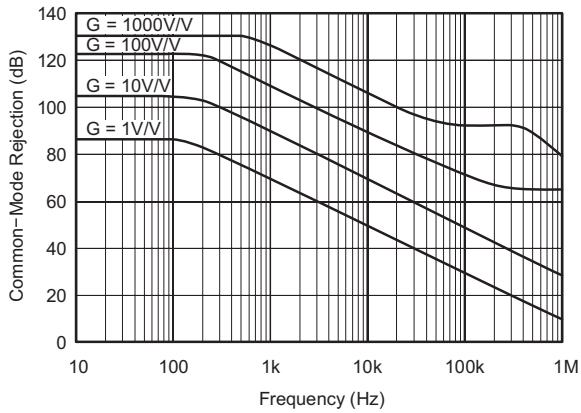

Figure 2. Common-Mode Rejection vs Frequency

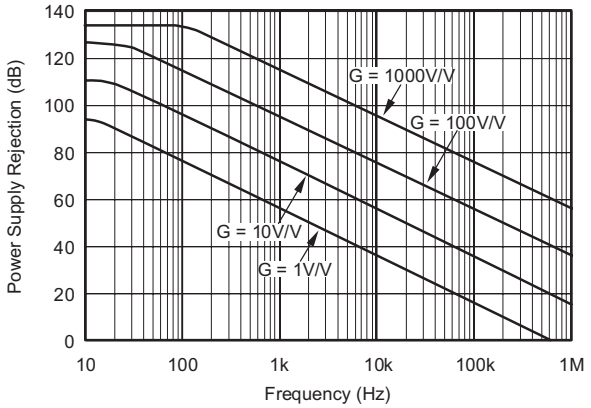

Figure 3. Positive Power Supply Rejection vs Frequency

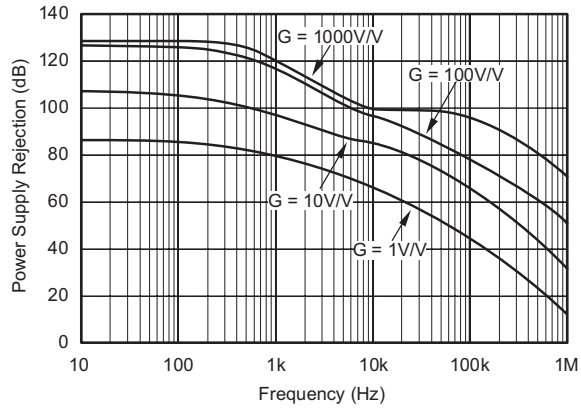

Figure 4. Negative Power Supply Rejection vs Frequency

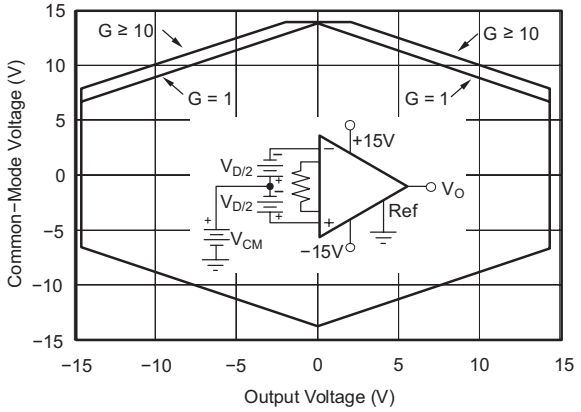

Figure 5. Input Common-Mode Range vs Output Voltage, V_S = ±15 V

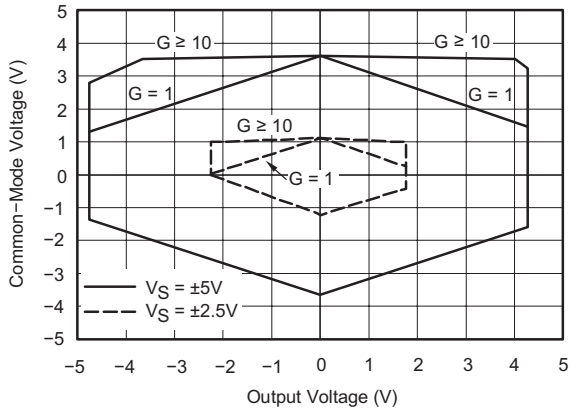

Figure 6. Input Common-Mode Range vs Output Voltage, V_S = ±5 V, ±2.5 V

Copyright © 1995–2019, Texas Instruments Incorporated

Typical Characteristics (continued)

at T_A = 25°C and V_S = ±15 V (unless otherwise noted)

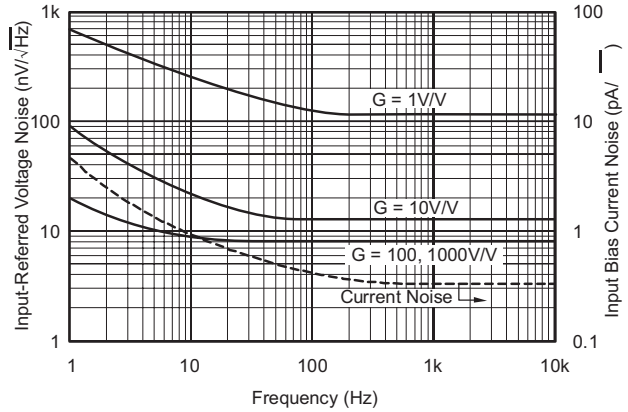

Figure 7. Input-Referred Noise vs Frequency

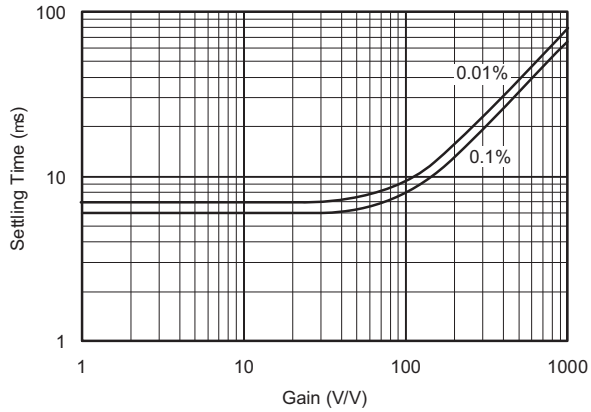

Figure 8. Settling Time vs Gain

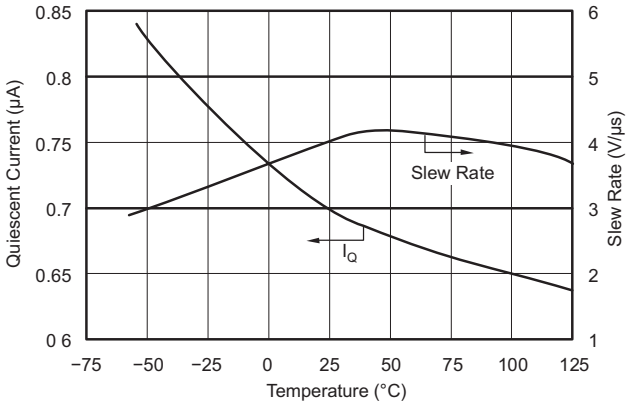

Figure 9. Quiescent Current and Slew Rate vs Temperature

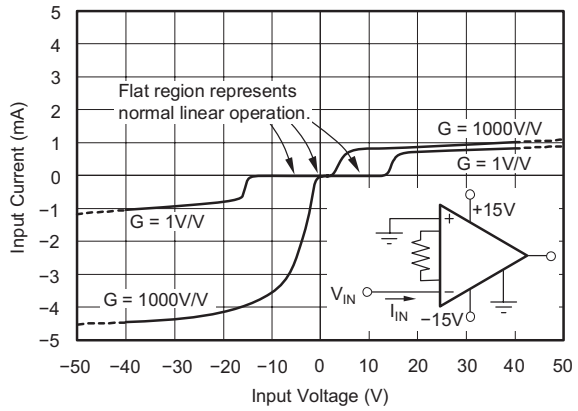

Figure 10. Input Overvoltage V/I Characteristics

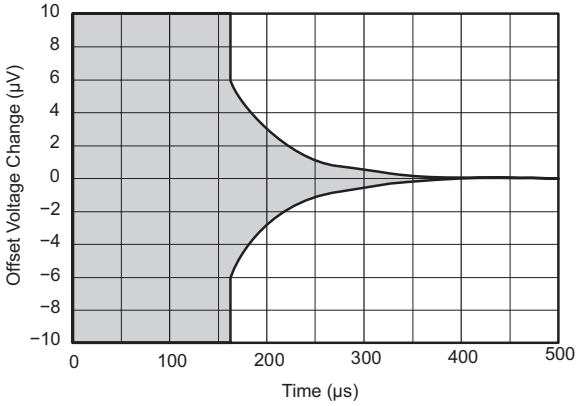

Figure 11. Input Offset Voltage Warm-Up

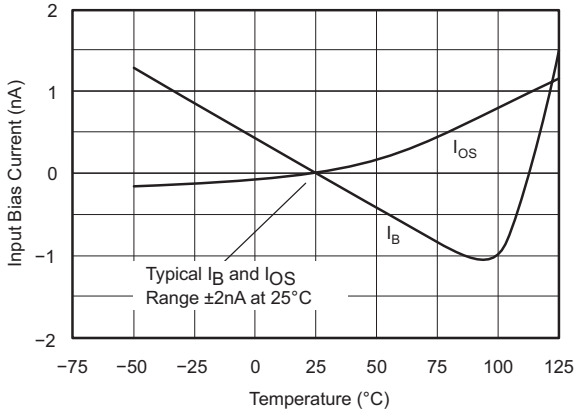

Figure 12. Input Bias Current vs Temperature

Typical Characteristics (continued)

at T_A = 25°C and V_S = ±15 V (unless otherwise noted)

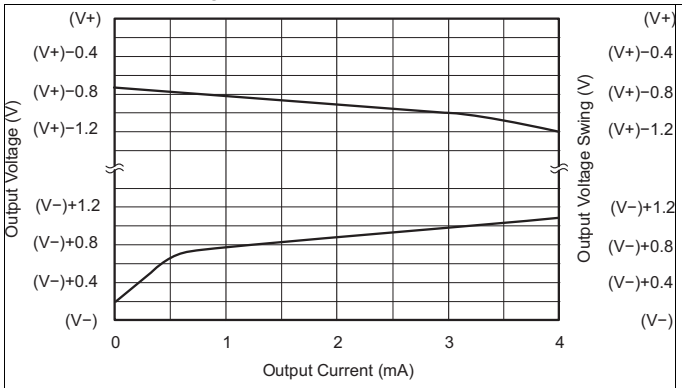

Figure 13. Output Voltage Swing vs Output Current

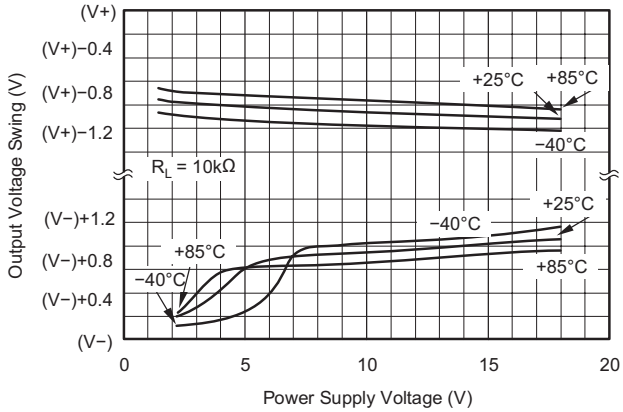

Figure 14. Output Voltage Swing vs Power Supply Voltage

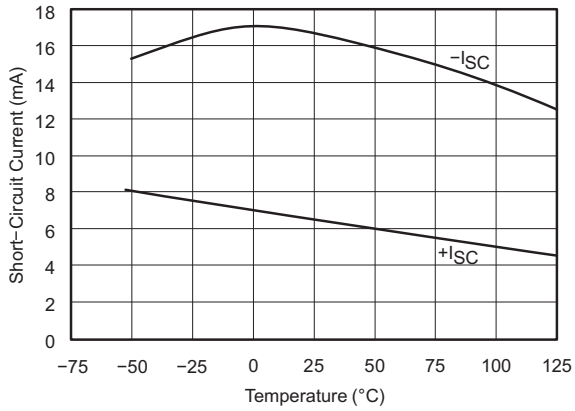

Figure 15. Short Circuit Output Current vs Temperature

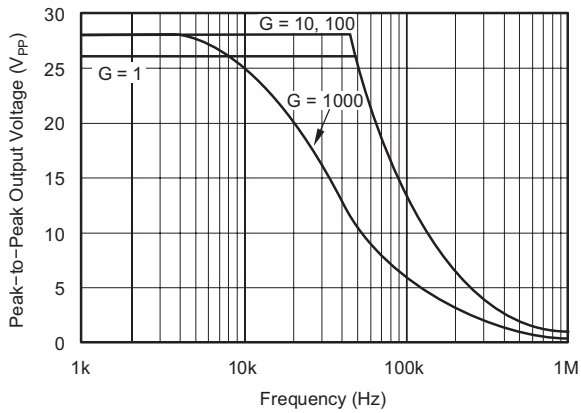

Figure 16. Maximum Output Voltage vs Frequency

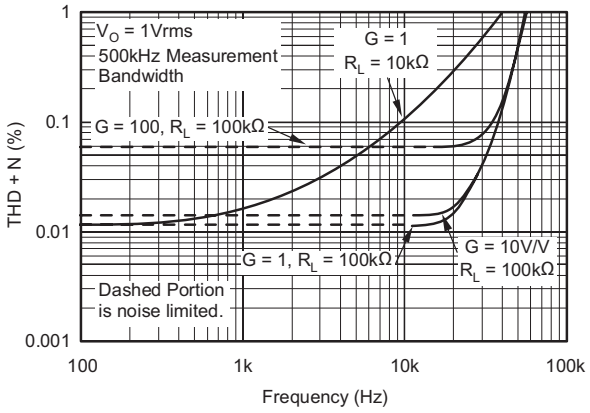

Figure 17. Total Harmonic Distortion + Noise vs Frequency

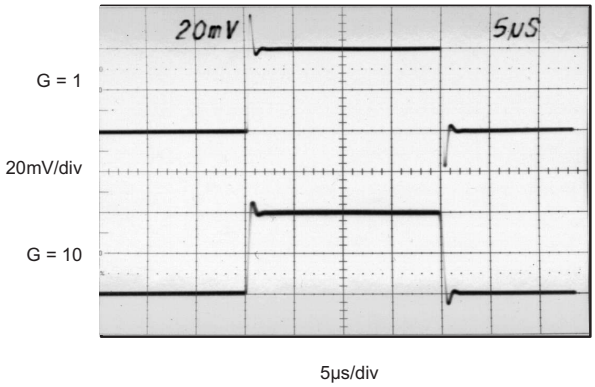

Figure 18. Small Signal (G = 1, 10)

Copyright © 1995–2019, Texas Instruments Incorporated

Typical Characteristics (continued)

at T_A = 25°C and V_S = ±15 V (unless otherwise noted)

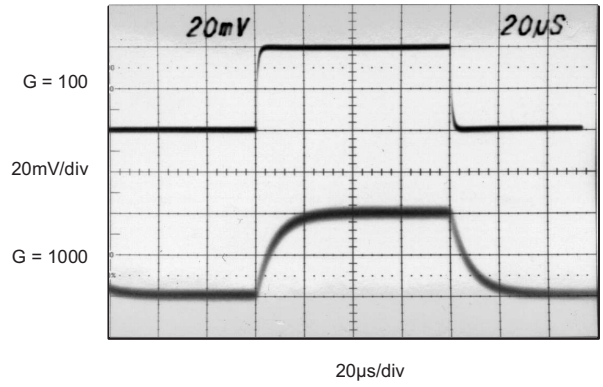

Figure 19. Small Signal (G = 100, 1000)

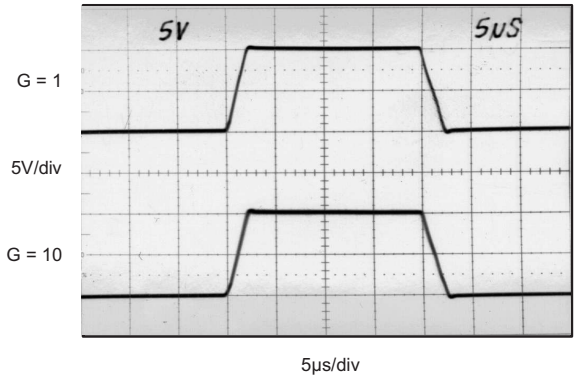

Figure 20. Large Signal (G = 1, 10)

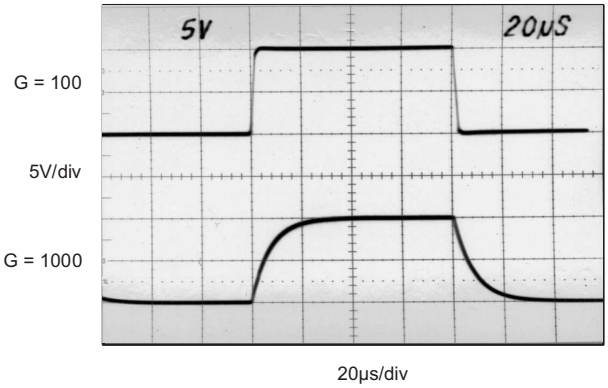

Figure 21. Large Signal (G = 100, 1000)

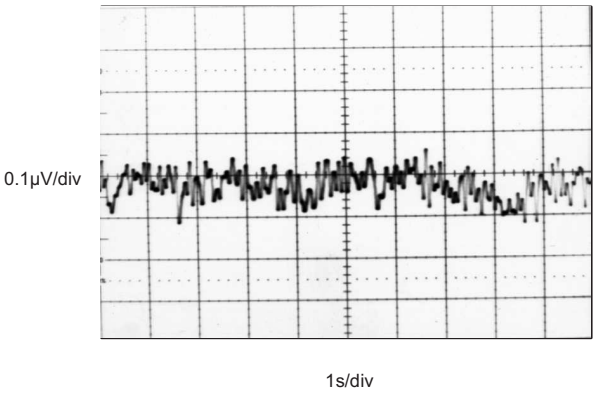

Figure 22. Voltage Noise 0.1 to 10-Hz Input-Referred, G ≥ 100

8 Detailed Description

8.1 Overview

The INA12x instrumentation amplifier is a type of differential amplifier that has been outfitted with input protection circuit and input buffer amplifiers, which eliminate the need for input impedance matching and make the amplifier particularly suitable for use in measurement and test equipment. Additional characteristics of the INA128 include a very low DC offset, low drift, low noise, very high open-loop gain, very high common-mode rejection ratio, and very high input impedances. The INA12x is used where great accuracy and stability of the circuit both short and long term are required.

8.2 Functional Block Diagram

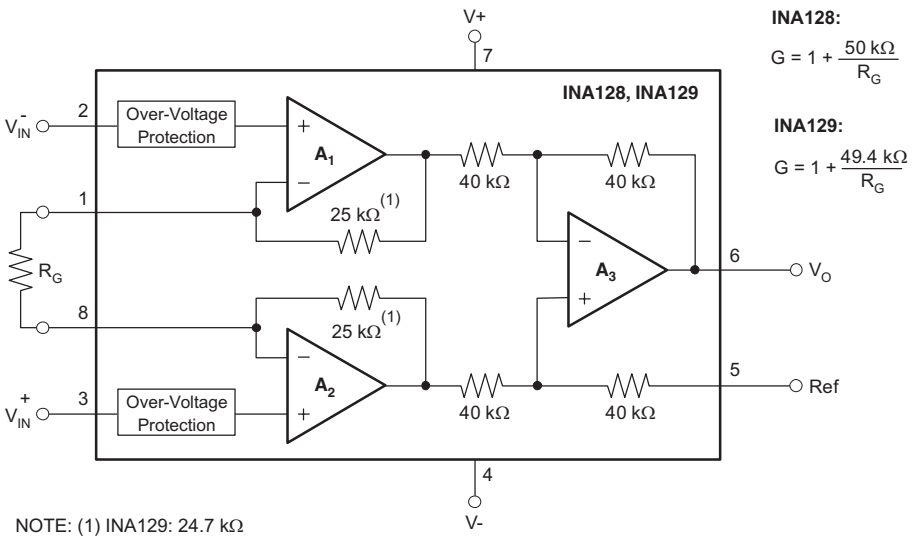

8.3 Feature Description

The INA12x devices are low power, general-purpose instrumentation amplifiers offering excellent accuracy. The versatile three-operational-amplifier design and small size make the amplifiers ideal for a wide range of applications. Current-feedback input circuitry provides wide bandwidth, even at high gain. A single external resistor sets any gain from 1 to 10,000. The INA128 is laser trimmed for very low offset voltage (25 μV typical) and high common-mode rejection (93 dB at G ≥ 100). These devices operate with power supplies as low as ±2.25 V, and quiescent current of 2 mA, typically. The internal input protection can withstand up to ±40 V without damage.

Copyright © 1995–2019, Texas Instruments Incorporated

8.4 Device Functional Modes

8.4.1 Noise Performance

The INA12x provides very low noise in most applications. Low-frequency noise is approximately 0.2 μV_{PP} measured from 0.1 to 10 Hz (G ≥ 100). This provides dramatically improved noise when compared to state-of-the-art chopper-stabilized amplifiers.

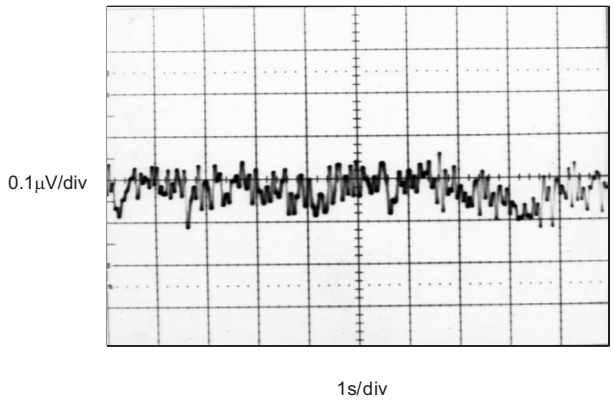

G ≥ 100

Figure 23. 0.1-Hz to 10-Hz Input-Referred Voltage Noise

8.4.2 Input Common-Mode Range

The linear input voltage range of the input circuitry of the INA12x is from approximately 1.4 V below the positive supply voltage to 1.7 V above the negative supply. As a differential input voltage causes the output voltage increase, however, the linear input range is limited by the output voltage swing of amplifiers A_1 and A_2. Thus the linear common-mode input range is related to the output voltage of the complete amplifier. This behavior also depends on supply voltage (see performance curve Figure 6).

Input-overload can produce an output voltage that appears normal. For example, if an input overload condition drives both input amplifiers to their positive output swing limit, the difference voltage measured by the output amplifier will be near zero. The output of A_3 will be near 0 V even though both inputs are overloaded.

9 Application and Implementation

NOTE

Information in the following applications sections is not part of the TI component specification, and TI does not warrant its accuracy or completeness. TI's customers are responsible for determining suitability of components for their purposes. Customers should validate and test their design implementation to confirm system functionality.

9.1 Application Information

The INA12x measures small differential voltage with high common-mode voltage developed between the noninverting and inverting input. The high-input voltage protection circuit in conjunction with high input impedance make the INA12x suitable for a wide range of applications. The ability to set the reference pin to adjust the functionality of the output signal offers additional flexibility that is practical for multiple configurations.

9.2 Typical Application

Figure 24 shows the basic connections required for operation of the INA12x. Applications with noisy or high impedance power supplies may require decoupling capacitors close to the device pins as shown. The output is referred to the output reference (Ref) terminal which is normally grounded. This must be a low-impedance connection to assure good common-mode rejection. A resistance of 8 Ω in series with the Ref pin will cause a typical device to degrade to approximately 80dB CMR (G = 1).

INA128: $G = 1 + \frac{50k}{R_G}$

INA129: $G = 1 + \frac{49.4k}{R_G}$

DESIRED GAIN (V/V)	INA128 R_G (Ω)	INA128 NEAREST 1% R_G (Ω)	INA129 R_G (Ω)	INA129 NEAREST 1% R_G (Ω
1	NC	NC	NC	NC
2	50.00k	49.9k	49.4k	49.9k
5	12.50k	12.4k	12.35k	12.4k
10	5.556k	5.62k	5489	5.49k
20	2.632k	2.61k	2600	2.61k
50	1.02k	1.02k	1008	1k
100	505.1	511	499	499
200	251.3	249	248	249
500	100.2	100	99	100
1000	50.05	49.9	49.5	49.9
2000	25.01	24.9	24.7	24.9
5000	10.00	10	9.88	9.76
10000	5.001	4.99	4.94	4.87

NC: No Connection

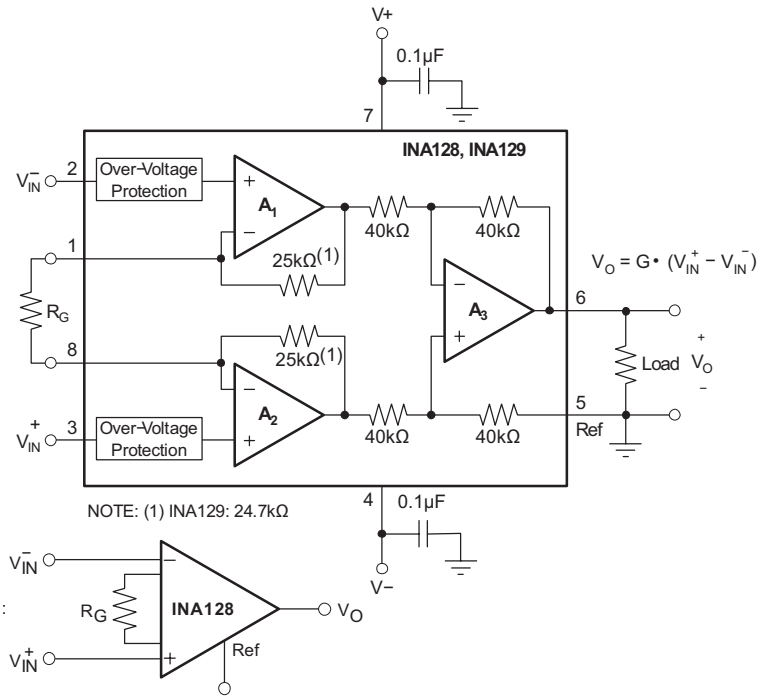

Figure 24. Basic Connections

Copyright © 1995–2019, Texas Instruments Incorporated

Typical Application (continued)

9.2.1 Design Requirements

The device can be configured to monitor the input differential voltage when the gain of the input signal is set by the external resistor R_G. The output signal references to the Ref pin. The most common application is where the output is referenced to ground when no input signal is present by connecting the Ref pin to ground, as Figure 24 shows. When the input signal increases, the output voltage at the OUT pin increases, too.

9.2.2 Detailed Design Procedure

9.2.2.1 Setting the Gain

Gain is set by connecting a single external resistor, R_G, connected between pins 1 and 8:

$$\text{INA128: } g = 1 + 50\ \text{k}\Omega/R_G \tag{1}$$

Commonly used gains and resistor values are shown in Figure 24.

The 50-kΩ term in Equation 1 comes from the sum of the two internal feedback resistors of A_1 and A_2. These on-chip metal film resistors are laser-trimmed to accurate absolute values. The accuracy and temperature coefficient of these internal resistors are included in the gain accuracy and drift specifications of the INA128.

The stability and temperature drift of the external gain setting resistor, R_G, also affects gain. The contribution of R_G to gain accuracy and drift can be directly inferred from Equation 1. Low resistor values required for high gain can make wiring resistance important. Sockets add to the wiring resistance, which contributes additional gain error (possibly an unstable gain error) in gains of approximately 100 or greater.

9.2.2.2 Dynamic Performance

The typical performance curve *Figure 1* shows that, despite its low quiescent current, the INA12x achieves wide bandwidth even at high gain. This is due to the current-feedback topology of the input stage circuitry. Settling time also remains excellent at high gain.

9.2.2.3 Offset Trimming

The INA12x is laser-trimmed for low-offset voltage and offset voltage drift. Most applications require no external offset adjustment. Figure 25 shows an optional circuit for trimming the output offset voltage. The voltage applied to the Ref terminal is summed with the output. The op amp buffer provides low impedance at the Ref terminal to preserve good common-mode rejection.

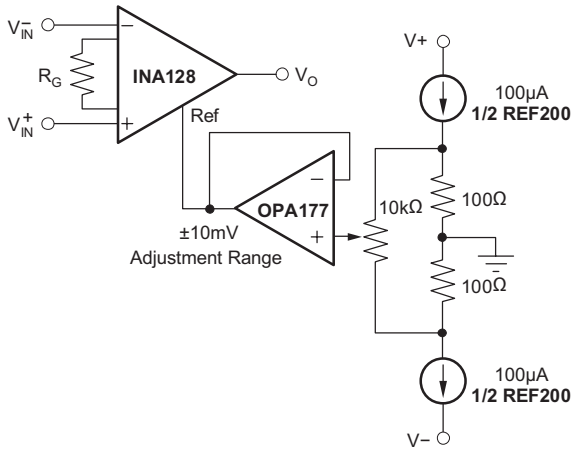

Figure 25. Optional Trimming of Output Offset Voltage

9.2.2.4 Input Bias Current Return Path

The input impedance of the INA12x is extremely high: approximately 10^{10} Ω. However, a path must be provided for the input bias current of both inputs. This input bias current is approximately ±2 nA. High input impedance means that this input bias current changes very little with varying input voltage.

Typical Application (continued)

Input circuitry must provide a path for this input bias current for proper operation. Figure 26 shows various provisions for an input bias current path. Without a bias current path, the inputs will float to a potential which exceeds the common-mode range, and the input amplifiers will saturate.

If the differential source resistance is low, the bias current return path can be connected to one input (see the thermocouple example in Figure 26). With higher source impedance, using two equal resistors provides a balanced input, with possible advantages of lower input offset voltage due to bias current and better high-frequency common-mode rejection.

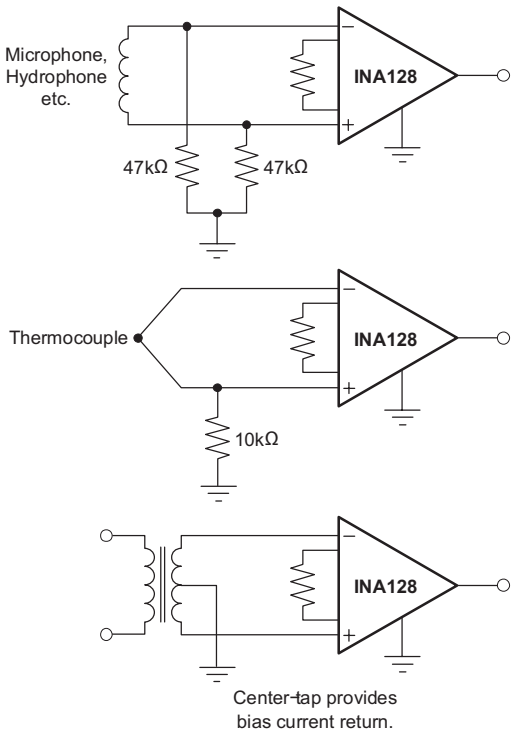

Figure 26. Providing an Input Common-Mode Current Path

Copyright © 1995–2019, Texas Instruments Incorporated

Typical Application (continued)

9.2.3 Application Curves

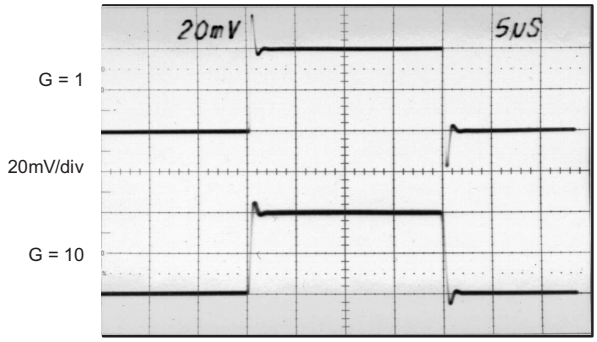

5µs/div

G = 1, 10

Figure 27. Small Signal

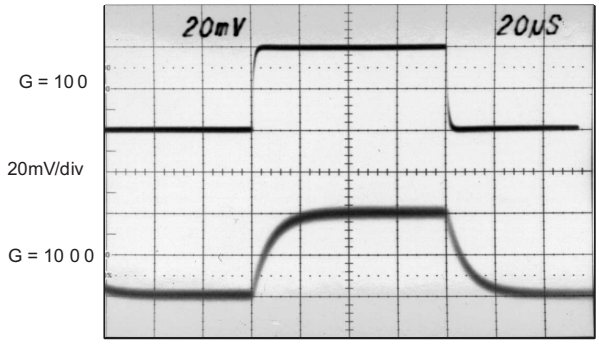

20µs/div

G = 100, 1000

Figure 28. Small Signal

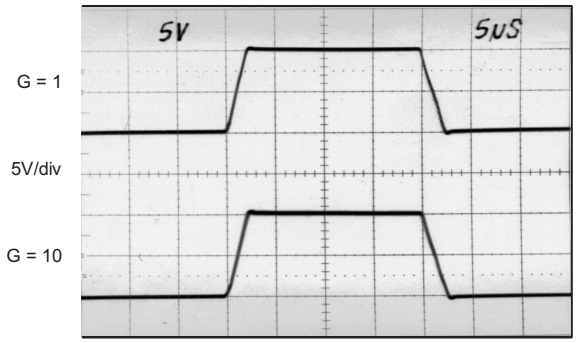

5µs/div

G = 1, 10

Figure 29. Large Signal

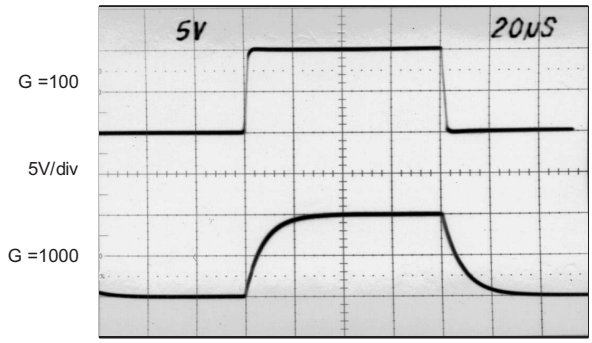

20µs/div

G = 100, 1000

Figure 30. Large Signal

10 Power Supply Recommendations

The minimum power supply voltage for INA12x is ±2.25 V and the maximum power supply voltage is ±18 V. This minimum and maximum range covers a wide range of power supplies; but for optimum performance, ±15 V is recommended. TI recommends adding a bypass capacitor at the input to compensate for the layout and power supply source impedance.

10.1 Low Voltage Operation

The INA12x can be operated on power supplies as low as ±2.25 V. Performance remains excellent with power supplies ranging from ±2.25 V to ±18 V. Most parameters vary only slightly throughout this supply voltage range—see *Typical Characteristics*.

Operation at very low supply voltage requires careful attention to assure that the input voltages remain within their linear range. Voltage swing requirements of internal nodes limit the input common-mode range with low power supply voltage. Figure 6 shows the range of linear operation for ±15-V, ±5-V, and ±2.5-V supplies.

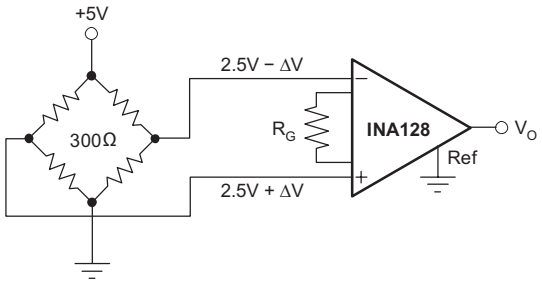

Figure 31. Bridge Amplifier

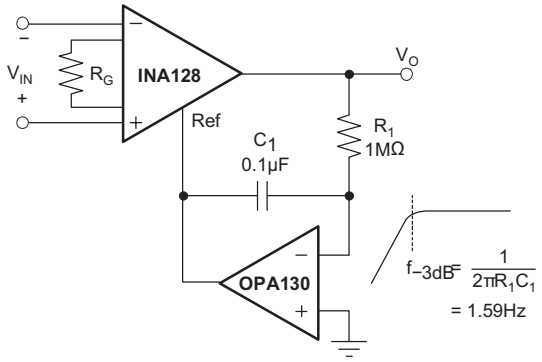

Figure 32. AC-Coupled Instrumentation Amplifier

Copyright © 1995–2019, Texas Instruments Incorporated

Low Voltage Operation (continued)

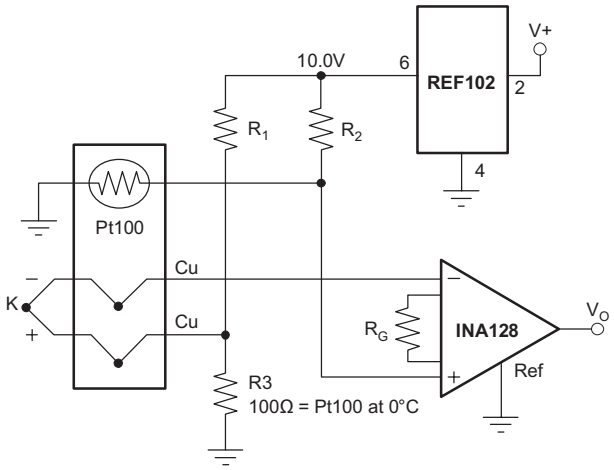

ISA TYPE	MATERIAL	SEEBECK COEFFICIENT (μV/°C)	R_1, R_2
E	+ Chromel − Constantan	58.5	66.5kΩ
J	+ Iron − Constantan	50.2	76.8kΩ
K	+ Chromel − Alumel	39.4	97.6kΩ
T	+ Copper − Constantan	38.0	102kΩ

Figure 33. Thermocouple Amplifier With RTD Cold-Junction Compensation

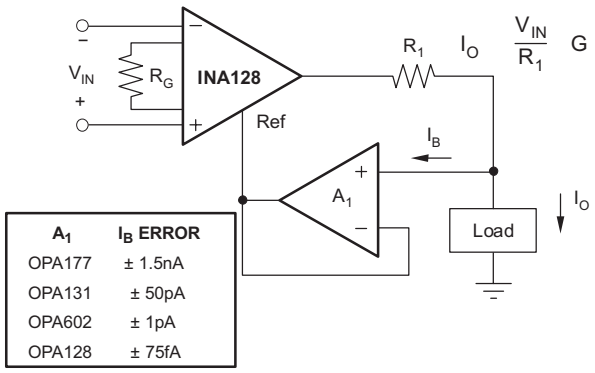

A_1	I_B ERROR
OPA177	± 1.5nA
OPA131	± 50pA
OPA602	± 1pA
OPA128	± 75fA

Figure 34. Differential Voltage to Current Converter

Low Voltage Operation (continued)

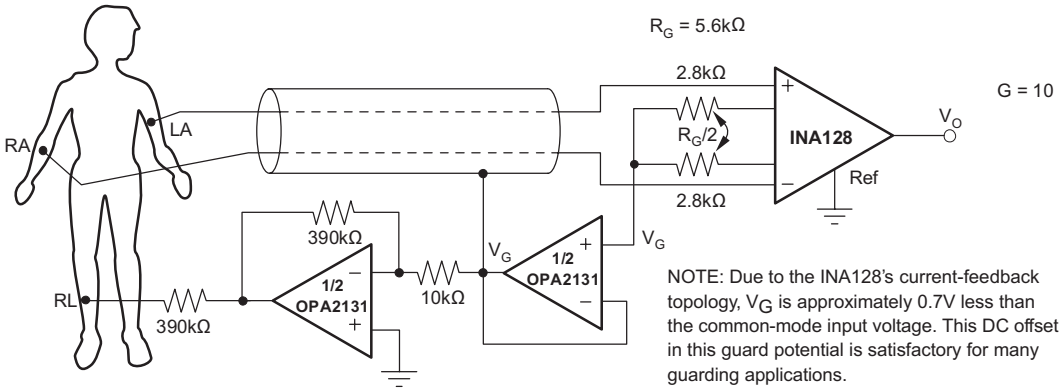

Figure 35. ECG Amplifier With Right-Leg Drive

11 Layout

11.1 Layout Guidelines

Place the power-supply bypass capacitor as closely as possible to the supply and ground pins. The recommended value of this bypass capacitor is 0.1 µF to 1 µF. If necessary, additional decoupling capacitance can be added to compensate for noisy or high-impedance power supplies. These decoupling capacitors must be placed between the power supply and INA12x devices.

The gain resistor must be placed close to pin 1 and pin 8. This placement limits the layout loop and minimizes any noise coupling into the part.

11.2 Layout Example

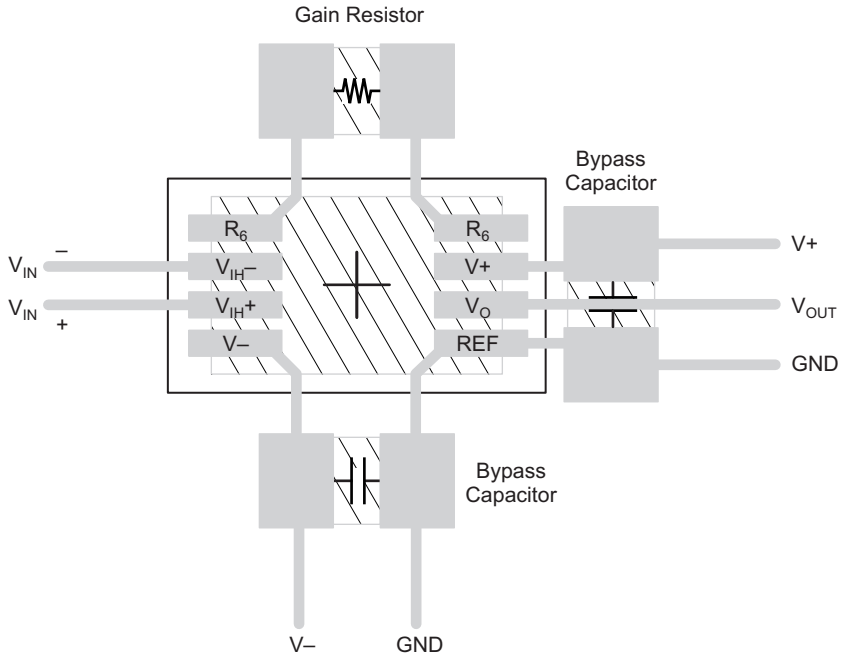

Figure 36. Recommended Layout

Copyright © 1995–2019, Texas Instruments Incorporated

12 Device and Documentation Support

12.1 Related Links

Table 1 lists quick access links. Categories include technical documents, support and community resources, tools and software, and quick access to sample or buy.

Table 1. Related Links

PARTS	PRODUCT FOLDER	SAMPLE & BUY	TECHNICAL DOCUMENTS	TOOLS & SOFTWARE	SUPPORT & COMMUNITY
INA128	Click here	Click here	Click here	Click here	Click here
INA129	Click here	Click here	Click here	Click here	Click here

12.2 Receiving Notification of Documentation Updates

To receive notification of documentation updates, navigate to the device product folder on ti.com. In the upper right corner, click on *Alert me* to register and receive a weekly digest of any product information that has changed. For change details, review the revision history included in any revised document.

12.3 Community Resources

The following links connect to TI community resources. Linked contents are provided "AS IS" by the respective contributors. They do not constitute TI specifications and do not necessarily reflect TI's views; see TI's Terms of Use.

TI E2E™ Online Community ***TI's Engineer-to-Engineer (E2E) Community.*** Created to foster collaboration among engineers. At e2e.ti.com, you can ask questions, share knowledge, explore ideas and help solve problems with fellow engineers.

Design Support ***TI's Design Support*** Quickly find helpful E2E forums along with design support tools and contact information for technical support.

12.4 Trademarks

E2E is a trademark of Texas Instruments.
All other trademarks are the property of their respective owners.

12.5 Electrostatic Discharge Caution

These devices have limited built-in ESD protection. The leads should be shorted together or the device placed in conductive foam during storage or handling to prevent electrostatic damage to the MOS gates.

12.6 Glossary

SLYZ022 — *TI Glossary*.

This glossary lists and explains terms, acronyms, and definitions.

13 Mechanical, Packaging, and Orderable Information

The following pages include mechanical, packaging, and orderable information. This information is the most current data available for the designated devices. This data is subject to change without notice and revision of this document. For browser-based versions of this data sheet, refer to the left-hand navigation.

PACKAGING INFORMATION

Orderable Device	Status (1)	Package Type	Package Drawing	Pins	Package Qty	Eco Plan (2)	Lead finish/ Ball material (6)	MSL Peak Temp (3)	Op Temp (°C)	Device Marking (4/5)	Samples
INA128P	ACTIVE	PDIP	P	8	50	RoHS & Green	Call TI	N / A for Pkg Type		INA128P	Samples
INA128PA	ACTIVE	PDIP	P	8	50	RoHS & Green	Call TI	N / A for Pkg Type		INA128P A	Samples
INA128PG4	ACTIVE	PDIP	P	8	50	RoHS & Green	Call TI	N / A for Pkg Type		INA128P	Samples
INA128U	ACTIVE	SOIC	D	8	75	RoHS & Green	Call TI	Level-3-260C-168 HR		INA 128U	Samples
INA128U/2K5	ACTIVE	SOIC	D	8	2500	RoHS & Green	Call TI	Level-3-260C-168 HR		INA 128U	Samples
INA128U/2K5G4	ACTIVE	SOIC	D	8	2500	RoHS & Green	Call TI	Level-3-260C-168 HR		INA 128U	Samples
INA128UA	ACTIVE	SOIC	D	8	75	RoHS & Green	Call TI	Level-3-260C-168 HR	-40 to 125	INA 128U A	Samples
INA128UA/2K5	ACTIVE	SOIC	D	8	2500	RoHS & Green	Call TI	Level-3-260C-168 HR	-40 to 125	INA 128U A	Samples
INA128UA/2K5E4	ACTIVE	SOIC	D	8	2500	RoHS & Green	Call TI	Level-3-260C-168 HR	-40 to 125	INA 128U A	Samples
INA128UA/2K5G4	ACTIVE	SOIC	D	8	2500	RoHS & Green	Call TI	Level-3-260C-168 HR	-40 to 125	INA 128U A	Samples
INA128UAE4	ACTIVE	SOIC	D	8	75	RoHS & Green	Call TI	Level-3-260C-168 HR	-40 to 125	INA 128U A	Samples
INA128UAG4	ACTIVE	SOIC	D	8	75	RoHS & Green	Call TI	Level-3-260C-168 HR	-40 to 125	INA 128U A	Samples
INA128UG4	ACTIVE	SOIC	D	8	75	RoHS & Green	Call TI	Level-3-260C-168 HR		INA 128U	Samples
INA129P	ACTIVE	PDIP	P	8	50	RoHS & Green	Call TI	N / A for Pkg Type		INA129P	Samples
INA129PA	ACTIVE	PDIP	P	8	50	RoHS & Green	Call TI	N / A for Pkg Type		INA129P	Samples

Orderable Device	Status (1)	Package Type	Package Drawing	Pins	Package Qty	Eco Plan (2)	Lead finish/ Ball material (6)	MSL Peak Temp (3)	Op Temp (°C)	Device Marking (4/5)	Samples
										A	
INA129PG4	ACTIVE	PDIP	P	8	50	RoHS & Green	Call TI	N / A for Pkg Type		INA129P	Samples
INA129U	ACTIVE	SOIC	D	8	75	RoHS & Green	Call TI	Level-3-260C-168 HR		INA 129U	Samples
INA129U/2K5	ACTIVE	SOIC	D	8	2500	RoHS & Green	Call TI	Level-3-260C-168 HR		INA 129U	Samples
INA129UA	ACTIVE	SOIC	D	8	75	RoHS & Green	Call TI	Level-3-260C-168 HR	-40 to 125	INA 129U A	Samples
INA129UA/2K5	ACTIVE	SOIC	D	8	2500	RoHS & Green	Call TI	Level-3-260C-168 HR	-40 to 125	INA 129U A	Samples
INA129UA/2K5G4	ACTIVE	SOIC	D	8	2500	RoHS & Green	Call TI	Level-3-260C-168 HR	-40 to 125	INA 129U A	Samples
INA129UAE4	ACTIVE	SOIC	D	8	75	RoHS & Green	Call TI	Level-3-260C-168 HR	-40 to 125	INA 129U A	Samples

(1) The marketing status values are defined as follows:
ACTIVE: Product device recommended for new designs.
LIFEBUY: TI has announced that the device will be discontinued, and a lifetime-buy period is in effect.
NRND: Not recommended for new designs. Device is in production to support existing customers, but TI does not recommend using this part in a new design.
PREVIEW: Device has been announced but is not in production. Samples may or may not be available.
OBSOLETE: TI has discontinued the production of the device.

(2) **RoHS:** TI defines "RoHS" to mean semiconductor products that are compliant with the current EU RoHS requirements for all 10 RoHS substances, including the requirement that RoHS substance do not exceed 0.1% by weight in homogeneous materials. Where designed to be soldered at high temperatures, "RoHS" products are suitable for use in specified lead-free processes. TI may reference these types of products as "Pb-Free".
RoHS Exempt: TI defines "RoHS Exempt" to mean products that contain lead but are compliant with EU RoHS pursuant to a specific EU RoHS exemption.
Green: TI defines "Green" to mean the content of Chlorine (Cl) and Bromine (Br) based flame retardants meet JS709B low halogen requirements of <=1000ppm threshold. Antimony trioxide based flame retardants must also meet the <=1000ppm threshold requirement.

(3) MSL, Peak Temp. - The Moisture Sensitivity Level rating according to the JEDEC industry standard classifications, and peak solder temperature.

(4) There may be additional marking, which relates to the logo, the lot trace code information, or the environmental category on the device.

(5) Multiple Device Markings will be inside parentheses. Only one Device Marking contained in parentheses and separated by a "~" will appear on a device. If a line is indented then it is a continuation of the previous line and the two combined represent the entire Device Marking for that device.

(6) Lead finish/Ball material - Orderable Devices may have multiple material finish options. Finish options are separated by a vertical ruled line. Lead finish/Ball material values may wrap to two lines if the finish value exceeds the maximum column width.

Important Information and Disclaimer: The information provided on this page represents TI's knowledge and belief as of the date that it is provided. TI bases its knowledge and belief on information provided by third parties, and makes no representation or warranty as to the accuracy of such information. Efforts are underway to better integrate information from third parties. TI has taken and continues to take reasonable steps to provide representative and accurate information but may not have conducted destructive testing or chemical analysis on incoming materials and chemicals. TI and TI suppliers consider certain information to be proprietary, and thus CAS numbers and other limited information may not be available for release.

In no event shall TI's liability arising out of such information exceed the total purchase price of the TI part(s) at issue in this document sold by TI to Customer on an annual basis.

OTHER QUALIFIED VERSIONS OF INA128, INA129 :

- Enhanced Product : INA129-EP

NOTE: Qualified Version Definitions:

- Enhanced Product - Supports Defense, Aerospace and Medical Applications

TAPE AND REEL INFORMATION

REEL DIMENSIONS

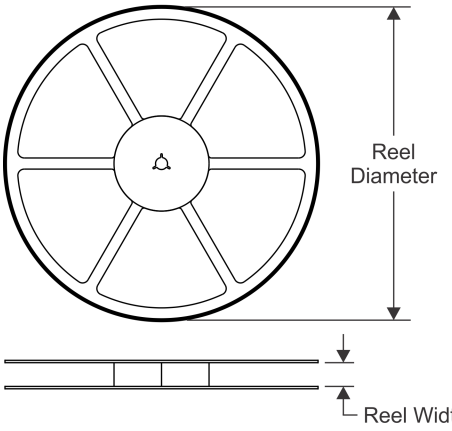

TAPE DIMENSIONS

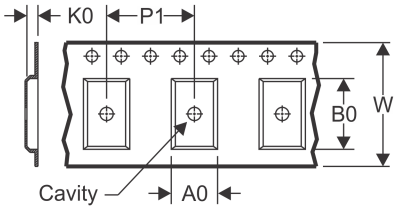

A0	Dimension designed to accommodate the component width
B0	Dimension designed to accommodate the component length
K0	Dimension designed to accommodate the component thickness
W	Overall width of the carrier tape
P1	Pitch between successive cavity centers

QUADRANT ASSIGNMENTS FOR PIN 1 ORIENTATION IN TAPE

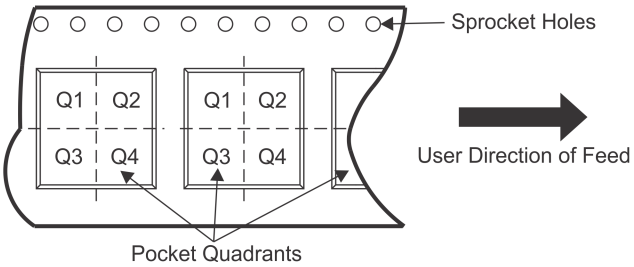

*All dimensions are nominal

Device	Package Type	Package Drawing	Pins	SPQ	Reel Diameter (mm)	Reel Width W1 (mm)	A0 (mm)	B0 (mm)	K0 (mm)	P1 (mm)	W (mm)	Pin1 Quadrant
INA128U/2K5	SOIC	D	8	2500	330.0	12.4	6.4	5.2	2.1	8.0	12.0	Q1
INA128UA/2K5	SOIC	D	8	2500	330.0	12.4	6.4	5.2	2.1	8.0	12.0	Q1
INA129U/2K5	SOIC	D	8	2500	330.0	12.4	6.4	5.2	2.1	8.0	12.0	Q1
INA129UA/2K5	SOIC	D	8	2500	330.0	12.4	6.4	5.2	2.1	8.0	12.0	Q1

TAPE AND REEL BOX DIMENSIONS

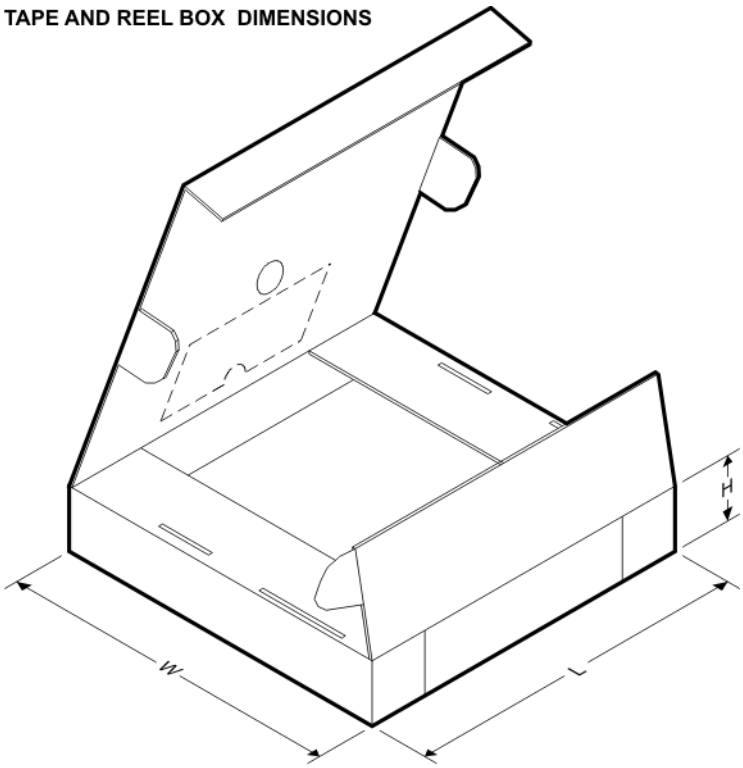

*All dimensions are nominal

Device	Package Type	Package Drawing	Pins	SPQ	Length (mm)	Width (mm)	Height (mm)
INA128U/2K5	SOIC	D	8	2500	853.0	449.0	35.0
INA128UA/2K5	SOIC	D	8	2500	853.0	449.0	35.0
INA129U/2K5	SOIC	D	8	2500	367.0	367.0	35.0
INA129UA/2K5	SOIC	D	8	2500	853.0	449.0	35.0

TUBE

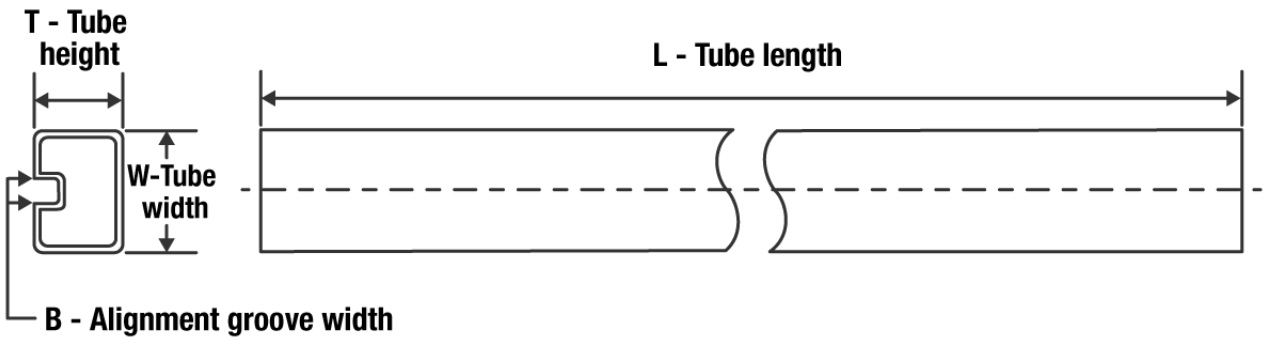

*All dimensions are nominal

Device	Package Name	Package Type	Pins	SPQ	L (mm)	W (mm)	T (µm)	B (mm)
INA128P	P	PDIP	8	50	506	13.97	11230	4.32
INA128PA	P	PDIP	8	50	506	13.97	11230	4.32
INA128PG4	P	PDIP	8	50	506	13.97	11230	4.32
INA128U	D	SOIC	8	75	506.6	8	3940	4.32
INA128UA	D	SOIC	8	75	506.6	8	3940	4.32
INA128UAE4	D	SOIC	8	75	506.6	8	3940	4.32
INA128UAG4	D	SOIC	8	75	506.6	8	3940	4.32
INA128UG4	D	SOIC	8	75	506.6	8	3940	4.32
INA129P	P	PDIP	8	50	506	13.97	11230	4.32
INA129PA	P	PDIP	8	50	506	13.97	11230	4.32
INA129PG4	P	PDIP	8	50	506	13.97	11230	4.32
INA129U	D	SOIC	8	75	506.6	8	3940	4.32
INA129UA	D	SOIC	8	75	506.6	8	3940	4.32
INA129UAE4	D	SOIC	8	75	506.6	8	3940	4.32

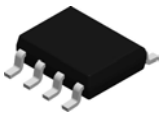

PACKAGE OUTLINE

D0008A

SOIC - 1.75 mm max height

SMALL OUTLINE INTEGRATED CIRCUIT

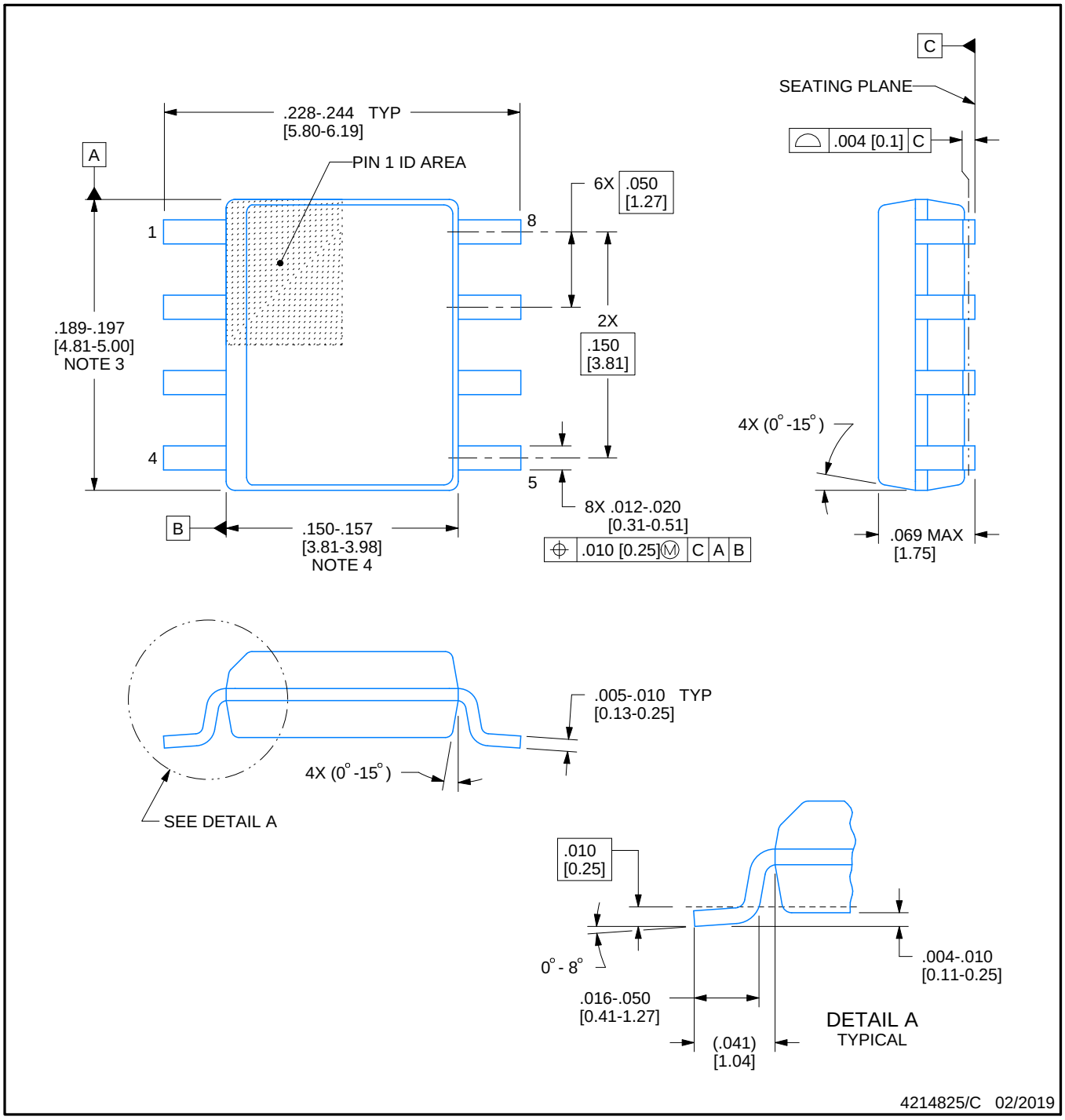

NOTES:

1. Linear dimensions are in inches [millimeters]. Dimensions in parenthesis are for reference only. Controlling dimensions are in inches. Dimensioning and tolerancing per ASME Y14.5M.
2. This drawing is subject to change without notice.
3. This dimension does not include mold flash, protrusions, or gate burrs. Mold flash, protrusions, or gate burrs shall not exceed .006 [0.15] per side.
4. This dimension does not include interlead flash.
5. Reference JEDEC registration MS-012, variation AA.

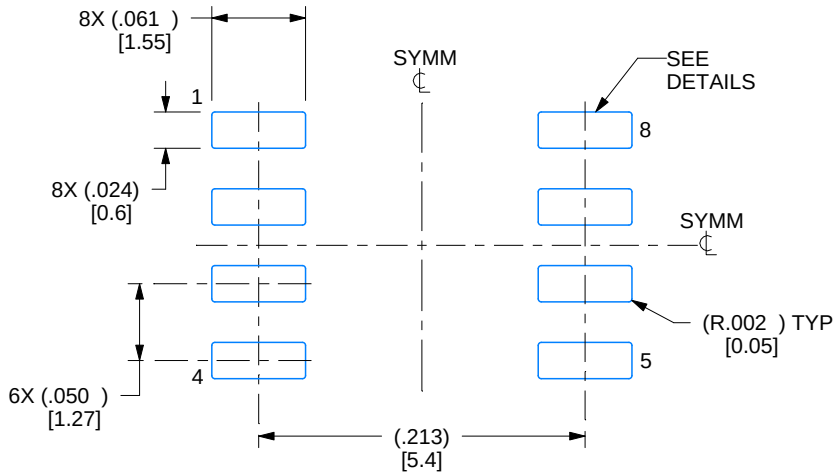

LAND PATTERN EXAMPLE
EXPOSED METAL SHOWN
SCALE:8X

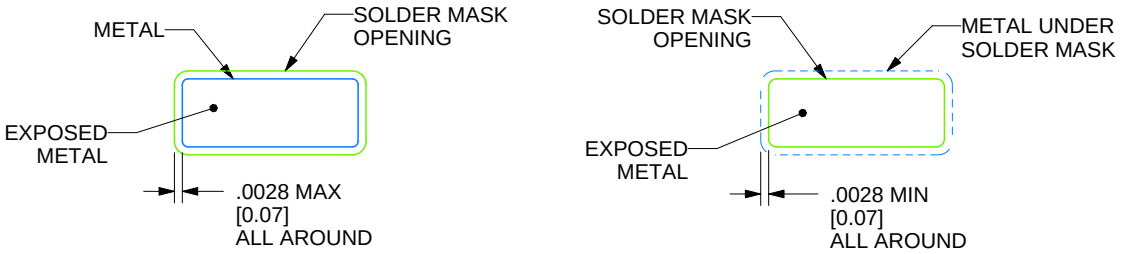

SOLDER MASK DETAILS

4214825/C 02/2019

NOTES: (continued)

6. Publication IPC-7351 may have alternate designs.
7. Solder mask tolerances between and around signal pads can vary based on board fabrication site.

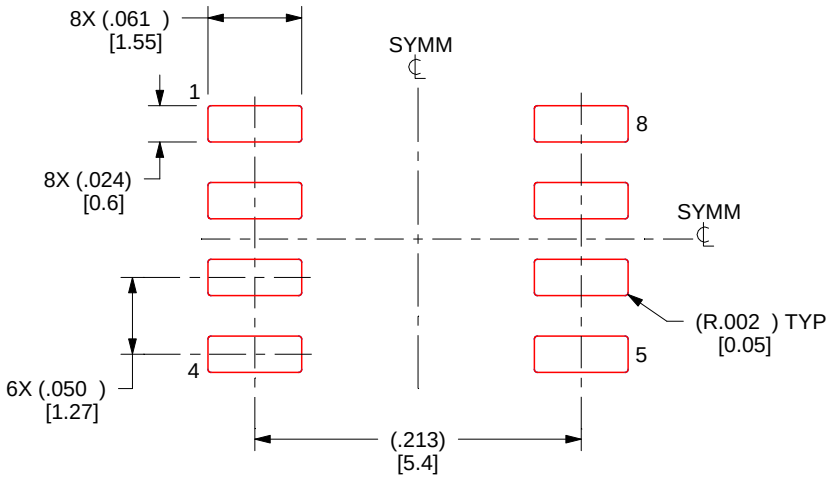

SOLDER PASTE EXAMPLE
BASED ON .005 INCH [0.125 MM] THICK STENCIL
SCALE:8X

4214825/C 02/2019

NOTES: (continued)

8. Laser cutting apertures with trapezoidal walls and rounded corners may offer better paste release. IPC-7525 may have alternate design recommendations.
9. Board assembly site may have different recommendations for stencil design.

P (R–PDIP–T8) PLASTIC DUAL–IN–LINE PACKAGE

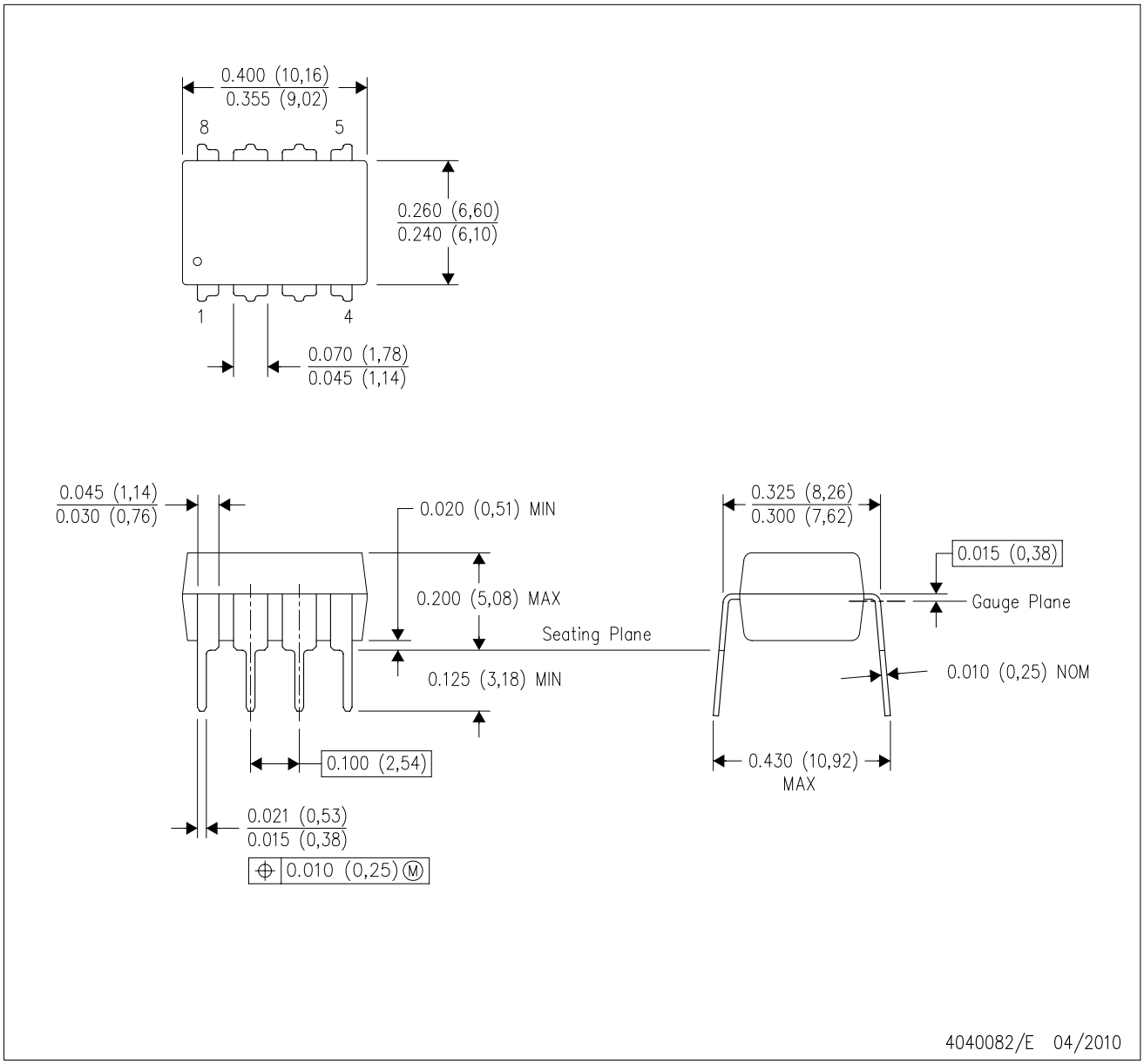

NOTES:
A. All linear dimensions are in inches (millimeters).
B. This drawing is subject to change without notice.
C. Falls within JEDEC MS–001 variation BA.

IMPORTANT NOTICE AND DISCLAIMER

TI PROVIDES TECHNICAL AND RELIABILITY DATA (INCLUDING DATA SHEETS), DESIGN RESOURCES (INCLUDING REFERENCE DESIGNS), APPLICATION OR OTHER DESIGN ADVICE, WEB TOOLS, SAFETY INFORMATION, AND OTHER RESOURCES “AS IS” AND WITH ALL FAULTS, AND DISCLAIMS ALL WARRANTIES, EXPRESS AND IMPLIED, INCLUDING WITHOUT LIMITATION ANY IMPLIED WARRANTIES OF MERCHANTABILITY, FITNESS FOR A PARTICULAR PURPOSE OR NON-INFRINGEMENT OF THIRD PARTY INTELLECTUAL PROPERTY RIGHTS.

These resources are intended for skilled developers designing with TI products. You are solely responsible for (1) selecting the appropriate TI products for your application, (2) designing, validating and testing your application, and (3) ensuring your application meets applicable standards, and any other safety, security, regulatory or other requirements.

These resources are subject to change without notice. TI grants you permission to use these resources only for development of an application that uses the TI products described in the resource. Other reproduction and display of these resources is prohibited. No license is granted to any other TI intellectual property right or to any third party intellectual property right. TI disclaims responsibility for, and you will fully indemnify TI and its representatives against, any claims, damages, costs, losses, and liabilities arising out of your use of these resources.

TI’s products are provided subject to TI’s Terms of Sale or other applicable terms available either on ti.com or provided in conjunction with such TI products. TI’s provision of these resources does not expand or otherwise alter TI’s applicable warranties or warranty disclaimers for TI products.

TI objects to and rejects any additional or different terms you may have proposed.

Mailing Address: Texas Instruments, Post Office Box 655303, Dallas, Texas 75265
Copyright © 2022, Texas Instruments Incorporated