ADC10D040 Dual 10-Bit, 40 MSPS, 267 mW A/D Converter

Check for Samples: ADC10D040

FEATURES

- **Internal Sample-and-Hold**
- **Internal Reference Capability**
- **Dual Gain Settings**
- **Offset Correction**
- **Selectable Offset Binary or 2's Complement Output**
- **Multiplexed or Parallel Output Bus**
- **Single +3.0V to 3.6V Operation**
- **Power Down and Standby Modes**
- **3V TTL Logic Input/Output Compatible**

APPLICATIONS

- **Digital Video**
- **CCD Imaging**
- **Portable Instrumentation**
- **Communications**
- **Medical Imaging**
- **Ultrasound**

KEY SPECIFICATIONS

- **Resolution: 10 Bits**
- **Conversion Rate: 40 MSPS**
- **ENOB: 9.4 Bits (typ)**
- **DNL: 0.35 LSB (typ)**
- **Conversion Latency Parallel Outputs: 2.5 Clock Cycles**
  - **Multiplexed Outputs, I Data Bus: 2.5 Clock Cycles**
  - **Multiplexed Outputs, Q Data Bus: 3 Clock Cycles**
- **PSRR: 90 dB**
- **Power Consumption—Normal Operation: 267 mW (typ)**
  - **Power Down Mode: < 1 mW (typ)**
  - **Fast Recovery Standby Mode: 30 mW (typ)**

DESCRIPTION

The ADC10D040 is a dual low power, high performance CMOS analog-to-digital converter that digitizes signals to 10 bits resolution at sampling rates up to 45 MSPS while consuming a typical 267 mW from a single 3.3V supply. No missing codes is specified over the full operating temperature range. The unique two stage architecture achieves 9.4 Effective Bits over the entire Nyquist band at 40 MHz sample rate. An output formatting choice of offset binary or 2's complement coding and a choice of two gain settings eases the interface to many systems. Also allowing great flexibility of use is a selectable 10-bit multiplexed or 20-bit parallel output mode. An offset correction feature minimizes the offset error.

To ease interfacing to most low voltage systems, the digital output power pins of the ADC10D040 can be tied to a separate supply voltage of 1.5V to 3.6V, making the outputs compatible with other low voltage systems. When not converting, power consumption can be reduced by pulling the PD (Power Down) pin high, placing the converter into a low power state where it typically consumes less than 1 mW and from which recovery is less than 1 ms. Bringing the STBY (Standby) pin high places the converter into a standby mode where power consumption is about 30 mW and from which recovery is 800 ns.

The ADC10D040's speed, resolution and single supply operation make it well suited for a variety of applications, including high speed portable applications.

Operating over the industrial ($-40° \leq T_A \leq +85°C$) temperature range, the ADC10D040 is available in a 48-pin TQFP. An evaluation board is available to ease the design effort.

Please be aware that an important notice concerning availability, standard warranty, and use in critical applications of Texas Instruments semiconductor products and disclaimers thereto appears at the end of this data sheet.

All trademarks are the property of their respective owners.

PRODUCTION DATA information is current as of publication date. Products conform to specifications per the terms of the Texas Instruments standard warranty. Production processing does not necessarily include testing of all parameters.

Copyright © 2001–2013, Texas Instruments Incorporated

These devices have limited built-in ESD protection. The leads should be shorted together or the device placed in conductive foam during storage or handling to prevent electrostatic damage to the MOS gates.

Connection Diagram

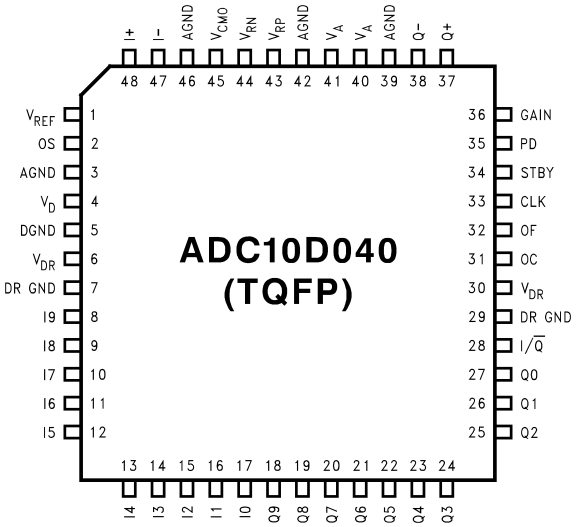

Figure 1. TOP VIEW

Block Diagram

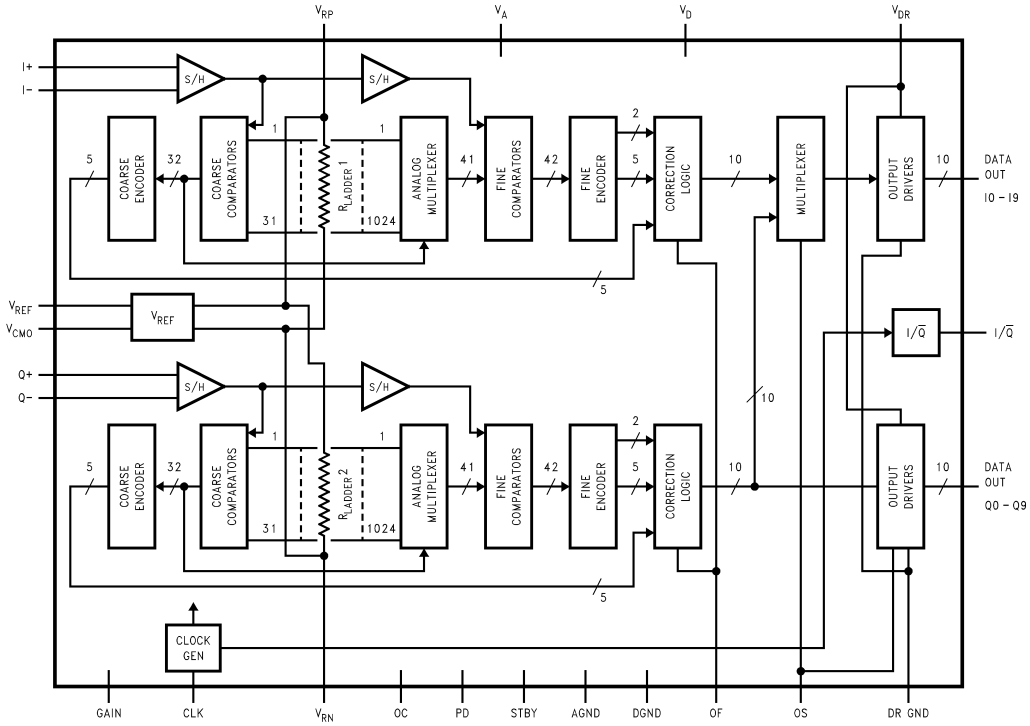

Copyright © 2001–2013, Texas Instruments Incorporated

PIN DESCRIPTIONS and EQUIVALENT CIRCUITS

Pin No.	Symbol	Equivalent Circuit	Description
48 47	I+ I−	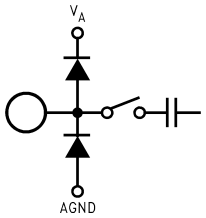	Analog inputs to "I" ADC. With V_{REF} = 1.4V, conversion range is 1.15V to 1.85V with GAIN pin low, or 0.8V to 2.2V with GAIN pin high.
37 38	Q+ Q−		Analog inputs to "Q" ADC. With V_{REF} = 1.4V, conversion range is 1.15V to 1.85V with GAIN pin low, or 0.8V to 2.2V with GAIN pin high.
1	V_{REF}	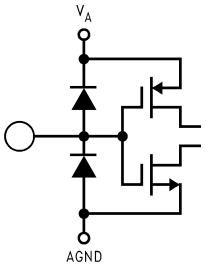	Analog Reference Voltage input. The voltage at this pin should be in the range of 0.6V to 1.6V. With 1.4V at this pin and the GAIN pin *low*, the full scale differential inputs are 1.4 V_{P-P}. With 1.4V at this pin and the GAIN pin *high*, the full scale differential inputs are 2.8 V_{P-P}. This pin should be bypassed with a minimum 1 µF capacitor.
45	V_{CMO}	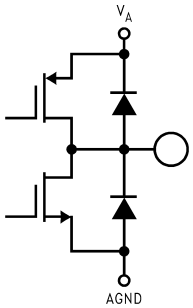	This is an analog output which can be used as a reference source and/or to set the common mode voltage of the input. It should be bypassed with a minimum of 1 µF low ESR capacitor in parallel with a 0.1 µF capacitor. This pin has a nominal output voltage of 1.5V and has a 1 mA output source capability.
43	V_{RP}	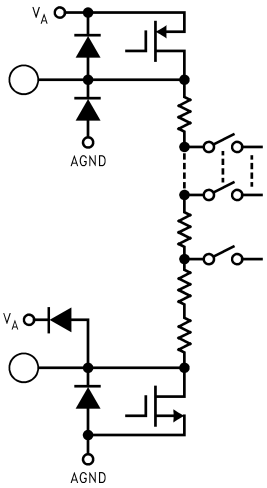	Top of the reference ladder. **Do not drive this pin.** Bypass this pin with a 10 µF low ESR capacitor and a 0.1 µF capacitor.
44	V_{RN}		Bottom of the reference ladder. **Do not drive this pin.** Bypass this pin with a 10 µF low ESR capacitor and a 0.1 µF capacitor.

PIN DESCRIPTIONS and EQUIVALENT CIRCUITS (continued)

Pin No.	Symbol	Equivalent Circuit	Description
33	CLK	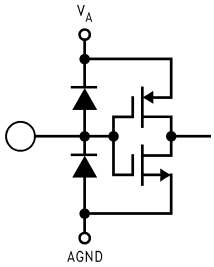	Digital clock input for both converters. The analog inputs are sampled on the falling edge of this clock input.
2	OS		Output Bus Select. With this pin at a logic high, both the “I” and the “Q” data are present on their respective 10-bit output buses (Parallel mode of operation). When this pin is at a logic low, the “I” and “Q” data are multiplexed onto the “I” output bus and the “Q” output lines all remain at a logic low (multiplexed mode).
31	OC		Offset Correct pin. A low-to-high transition on this pin initiates an independent offset correction sequence for each converter, which takes 34 clock cycles to complete. During this time 32 conversions are taken and averaged. The result is subtracted from subsequent conversions. Each input pair should have 0V differential value during this entire 34 clock period.
32	OF		Output Format pin. When this pin is LOW the output format is Offset Binary. When this pin is HIGH the output format is 2's complement. This pin may be changed asynchronously, but this will result in errors for one or two conversions.
34	STBY		Standby pin. The device operates normally with a logic low on this and the PD (Power Down) pin. With this pin at a logic high and the PD pin at a logic low, the device is in the standby mode where it consumes just 30 mW of power. It takes just 800 ns to come out of this mode after the STBY pin is brought low.
35	PD		Power Down pin that, when high, puts the converter into the Power Down mode where it consumes just 1 mW of power. It takes less than 1 ms to recover from this mode after the PD pin is brought low. If both the STBY and PD pins are high simultaneously, the PD pin dominates.
36	GAIN		This pin sets the internal signal gain at the inputs to the ADCs. With this pin low the full scale differential input peak-to-peak signal is equal to V_{REF}. With this pin high the full scale differential input peak-to-peak signal is equal to 2 x V_{REF}.
8 thru 27	I0–I9 and Q0–Q9	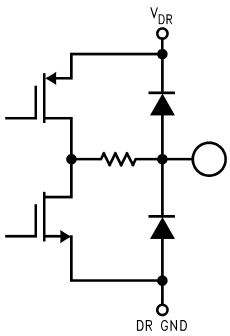	3V TTL/CMOS-compatible Digital Output pins that provide the conversion results of the I and Q inputs. I0 and Q0 are the LSBs, I9 and Q9 are the MSBs. Valid data is present just after the rising edge of the CLK input in the Parallel mode. In the multiplex mode, I-channel data is valid on I0 through I9 when the I/$\overline{Q}$ output is high and the Q-channel data is valid on I0 through I9 when the I/$\overline{Q}$ output is low.
28	I/$\overline{Q}$		Output data valid signal. In the multiplexed mode, this pin transitions from low to high when the data bus transitions from Q-data to I-data, and from high to low when the data bus transitions from I-data to Q-data. In the Parallel mode, this pin transitions from low to high as the output data changes.
40, 41	V_A		Positive analog supply pin. This pin should be connected to a quiet voltage source of +3.0V to +3.6V. V_A and V_D should have a common supply and be separately bypassed with 10 µF to 50 µF capacitors in parallel with 0.1 µF capacitors.
4	V_D		Digital supply pin. This pin should be connected to a quiet voltage source of +3.0V to +3.6V. V_A and V_D should have a common supply and be separately bypassed with 10 µF to 50 µF capacitors in parallel with 0.1 µF capacitors.
6, 30	V_{DR}		Digital output driver supply pins. These pins should be connected to a voltage source of +1.5V to V_D and be bypassed with 10 µF to 50 µF capacitors in parallel with 0.1 µF capacitors.
3, 39, 42, 46	AGND		The ground return for the analog supply. AGND and DGND should be connected together close to the ADC10D040 package.
5	DGND		The ground return for the digital supply. AGND and DGND should be connected together close to the ADC10D040 package.
7, 29	DR GND		The ground return of the digital output drivers.

Copyright © 2001–2013, Texas Instruments Incorporated

These devices have limited built-in ESD protection. The leads should be shorted together or the device placed in conductive foam during storage or handling to prevent electrostatic damage to the MOS gates.

Absolute Maximum Ratings[1][2][3]

Positive Supply Voltages		3.8V
Voltage on Any Pin		−0.3V to (V_A or V_D +0.3V)
Input Current at Any Pin[4]		±25 mA
Package Input Current[4]		±50 mA
Package Dissipation at T_A = 25°C		See [5]
ESD Susceptibility[6]	Human Body Model	2500V
	Machine Model	250V
Soldering Temperature, Infrared, 10 sec.		235°C
Storage Temperature		−65°C to +150°C

(1) All voltages are measured with respect to GND = AGND = DGND = 0V, unless otherwise specified.
(2) Absolute Maximum Ratings indicate limits beyond which damage to the device may occur. Operating Ratings indicate conditions for which the device is functional, but do not ensure specific performance limits. For ensured specifications and test conditions, see the Electrical Characteristics. The ensured specifications apply only for the test conditions listed. Some performance characteristics may degrade when the device is not operated under the listed test conditions.
(3) If Military/Aerospace specified devices are required, please contact the Texas Instruments Sales Office/ Distributors for availability and specifications.
(4) When the input voltage at any pin exceeds the power supplies (V_{IN} < GND or V_{IN} > V_A or V_D), the current at that pin should be limited to 25 mA. The 50 mA maximum package input current rating limits the number of pins that can safely exceed the power supplies with an input current of 25 mA to two.
(5) The absolute maximum junction temperature ($T_J$max) for this device is 150°C. The maximum allowable power dissipation is dictated by $T_J$max, the junction-to-ambient thermal resistance (θ_{JA}), and the ambient temperature (T_A), and can be calculated using the formula P_DMAX = ($T_J$max - T_A)/θ_{JA}. In the 48-pin TQFP, θ_{JA} is 76°C/W, so P_DMAX = 1,645 mW at 25°C and 855 mW at the maximum operating ambient temperature of 85°C. Note that the power dissipation of this device under normal operation will typically be about 307 mW (267 mW quiescent power + 40 mW due to 1 LVTTL load on each digital output). The values for maximum power dissipation listed above will be reached only when the ADC10D040 is operated in a severe fault condition (e.g. when input or output pins are driven beyond the power supply voltages, or the power supply polarity is reversed). Obviously, such conditions should always be avoided.
(6) Human body model is 100 pF capacitor discharged through a 1.5 kΩ resistor. Machine model is 220 pF discharged through 0Ω.

Operating Ratings[1][2]

Operating Temperature Range		−40°C ≤ T_A ≤ +85°C
V_A, V_D Supply Voltage		+3.0V to +3.6V
V_{DR} Supply Voltage		+1.5V to V_D
V_{IN} Differential Voltage Range	GAIN = Low	±V_{REF}/2
	GAIN = High	±V_{REF}
V_{CM} Input Common Mode Range	GAIN = Low	V_{REF}/4 to (V_A–V_{REF}/4)
	GAIN = High	V_{REF}/2 to (V_A–V_{REF}/2)
V_{REF} Voltage Range		0.6V to 1.8V
Digital Input Pins Voltage Range		−0.3V to (V_A +0.3V)

(1) Absolute Maximum Ratings indicate limits beyond which damage to the device may occur. Operating Ratings indicate conditions for which the device is functional, but do not ensure specific performance limits. For ensured specifications and test conditions, see the Electrical Characteristics. The ensured specifications apply only for the test conditions listed. Some performance characteristics may degrade when the device is not operated under the listed test conditions.
(2) All voltages are measured with respect to GND = AGND = DGND = 0V, unless otherwise specified.

Copyright © 2001–2013, Texas Instruments Incorporated

Converter Electrical Characteristics

The following specifications apply for $V_A = V_D = +3.3\ V_{DC}$, $V_{DR} = +2.5\ V_{DC}$, $V_{REF} = 1.4\ V_{DC}$, GAIN = OF = 0V, OS = 3.3V, V_{IN} (a.c. coupled) = FSR = 1.4 V_{P-P}, C_L = 15 pF, f_{CLK} = 40 MHz, 50% Duty Cycle, R_S = 50Ω, $t_{rc} = t_{fc}$ < 4 ns, NOT offset corrected. **Boldface limits apply for $T_A = T_{MIN}$ to T_{MAX}:** all other limits T_A = 25°C (1)

Symbol	Parameter	Conditions	Typical (2)	Limits (3)	Units (Limits)
STATIC CONVERTER CHARACTERISTICS					
INL	Integral Non-Linearity		±0.65	**±1.9**	LSB (max)
DNL	Differential Non-Linearity		±0.35	**+1.2** **−1.0**	LSB (max) LSB (min)
	Resolution with No Missing Codes			**10**	Bits
V_{OFF}	Offset Error	Without Offset Correction	−3.3	**+7** **−12**	LSB (max) LSB (min)
		With Offset Correction	+0.4	**+1.5** **−0.5**	LSB (max) LSB (min)
GE	Gain Error		−4	**+5** **−12**	%FS (max) %FS (min)
DYNAMIC CONVERTER CHARACTERISTICS					
ENOB	Effective Number of Bits	f_{IN} = 4.43 MHz, V_{IN} = FSR −0.1 dB f_{IN} = 10.4 MHz, V_{IN} = FSR −0.1 dB, T_A = 25°C f_{IN} = 19.7 MHz, V_{IN} = FSR −0.1 dB	9.5 9.5 9.4	9.1	Bits Bits (min) Bits
SINAD	Signal-to-Noise Plus Distortion Ratio	f_{IN} = 4.43 MHz, V_{IN} = FSR −0.1 dB f_{IN} = 10.4 MHz, V_{IN} = FSR −0.1 dB, T_A = 25°C f_{IN} = 19.7 MHz, V_{IN} = FSR −0.1 dB	59 59 58	56.3	dB dB (min) dB
SNR	Signal-to-Noise Ratio	f_{IN} = 4.43 MHz, V_{IN} = FSR −0.1 dB f_{IN} = 10.4 MHz, V_{IN} = FSR −0.1 dB, T_A = 25°C f_{IN} = 19.7 MHz, V_{IN} = FSR −0.1 dB	60 60 59	57.3	dB dB (min) dB
THD	Total Harmonic Distortion	f_{IN} = 4.43 MHz, V_{IN} = FSR −0.1 dB f_{IN} = 10.4 MHz, V_{IN} = FSR −0.1 dB, T_A = 25°C f_{IN} = 19.7 MHz, V_{IN} = FSR −0.1 dB	−70 −69 −67	−61	dB dB (min) dB
HS2	Second Harmonic	f_{IN} = 4.43 MHz, V_{IN} = FSR −0.1 dB f_{IN} = 10.4 MHz, V_{IN} = FSR −0.1 dB f_{IN} = 19.7 MHz, V_{IN} = FSR −0.1 dB	−86 −83 −81		dB dB dB
HS3	Third Harmonic	f_{IN} = 4.43 MHz, V_{IN} = FSR −0.1 dB f_{IN} = 10.4 MHz, V_{IN} = FSR −0.1 dB f_{IN} = 19.7 MHz, V_{IN} = FSR −0.1 dB	−73 −73 −72		dB dB dB
SFDR	Spurious Free Dynamic Range	f_{IN} = 4.43 MHz, V_{IN} = FSR −0.1 dB f_{IN} = 10.4 MHz, V_{IN} = FSR −0.1 dB f_{IN} = 19.7 MHz, V_{IN} = FSR −0.1 dB	72 72 70		dB dB dB
IMD	Intermodulation Distortion	f_{IN1} < 8.5 MHz, V_{IN} = FSR −6.1 dB f_{IN2} < 9.5 MHz, V_{IN} = FSR −6.1 dB	71		dB
	Overrange Output Code	$(V_{IN+}-V_{IN-})$ > 1.5V		**1023**	
	Underrange Output Code	$(V_{IN+}-V_{IN-})$ < −1.5V		**0**	
FPBW	Full Power Bandwidth		140		MHz

(1) The inputs are protected as shown below. Input voltage magnitude up to 300 mV beyond the supply rails will not damage this device. However, errors in the A/D conversion can occur if the input goes beyond the limits given in these tables.
(2) Typical figures are at TJ = 25°C, and represent most likely parametric norms.
(3) Test limits are specified to TI's AOQL (Average Outgoing Quality Level). Performance is specified only at V_{REF} = 1.4V and a clock duty cycle of 50%. The limits for V_{REF} and clock duty cycle specify the range over which reasonable performance is expected. Tests are performed and limits specified with clock low and high levels of 0.3V and V_D−0.3V, respectively.

Copyright © 2001–2013, Texas Instruments Incorporated

Converter Electrical Characteristics (continued)

The following specifications apply for $V_A = V_D = +3.3\ V_{DC}$, $V_{DR} = +2.5\ V_{DC}$, $V_{REF} = 1.4\ V_{DC}$, GAIN = OF = 0V, OS = 3.3V, V_{IN} (a.c. coupled) = FSR = 1.4 V_{P-P}, C_L = 15 pF, f_{CLK} = 40 MHz, 50% Duty Cycle, R_S = 50Ω, $t_{rc} = t_{fc}$ < 4 ns, NOT offset corrected. **Boldface limits apply for $T_A = T_{MIN}$ to T_{MAX}:** all other limits T_A = 25°C (1)

Symbol	Parameter	Conditions		Typical (2)	Limits (3)	Units (Limits)
INTER-CHANNEL CHARACTERISTICS						
	Crosstalk	1 MHz input to tested channel, 10.3 MHz input to other channel		−72		dB
	Channel - Channel Aperture Delay Match	f_{IN} = 8 MHz		8.5		ps
	Channel - Channel Gain Matching			0.1		%FS
REFERENCE AND ANALOG CHARACTERISTICS						
V_{IN}	Analog Differential Input Range	Gain Pin = AGND		1.4		V_{P-P}
		Gain Pin = V_A		2.8		V_{P-P}
C_{IN}	Analog Input Capacitance (each input)	Clock High		6		pF
		Clock Low		3		pF
R_{IN}	Analog Differential Input Resistance			13.5		kΩ
V_{REF}	Reference Voltage			1.4	0.6	V (min)
					1.6	V (max)
I_{REF}	Reference Input Current			<1		µA
V_{CMO}	Common Mode Voltage Output	1 mA load to ground (sourcing current)		1.5	**1.35**	V (min)
					1.6	V (max)
TC V_{CMO}	Common Mode Voltage Temperature Coefficient			30		ppm/°C
DIGITAL INPUT CHARACTERISTICS						
V_{IH}	Logical "1" Input Voltage	V_D = +3.0V			**2.0**	V (min)
V_{IL}	Logical "0" Input Voltage	V_D = +3.6V			**0.5**	V (max)
I_{IH}	Logical "1" Input Current	$V_{IH} = V_D$		<1		µA
I_{IL}	Logical "0" Input Current	V_{IL} = DGND		>−1		µA
DIGITAL OUTPUT CHARACTERISTICS						
V_{OH}	Logical "1" Output Voltage	V_{DR} = +2.5V, I_{OUT} = −0.5 mA			**V_{DR} −0.2V**	V (min)
V_{OL}	Logical "0" Output Voltage	V_{DR} = +2.5V, I_{OUT} = 1.6 mA			**0.4**	V (max)
$+I_{SC}$	Output Short Circuit Source Current	V_{OUT} = 0V	Parallel Mode	−4.7		mA
			Multiplexed Mode	−9		mA
$-I_{SC}$	Output Short Circuit Sink Current	$V_{OUT} = V_{DR}$	Parallel Mode	4.7		mA
			Multiplexed Mode	9		mA
POWER SUPPLY CHARACTERISTICS						
I_A	Analog Supply Current	PD = LOW, STBY = LOW, d.c. input		70	**80**	mA (max)
		PD = LOW, STBY = HIGH		10		mA
		PD = HIGH, STBY = LOW or HIGH		0.1		mA
I_D	Digital Supply Current	PD = LOW, STBY = LOW, d.c. input		9	**10**	mA (max)
		PD = LOW, STBY = HIGH		0.1		mA
		PD = HIGH, STBY = LOW or HIGH		0.1		mA
I_{DR}	Digital Output Driver Supply Current (4)	PD = STBY = LOW, dc input		1.9	**2.5**	mA (max)

(4) I_{DR} is the current consumed by the switching of the output drivers and is primarily determined by the load capacitance on the output pins, the supply voltage, V_{DR}, and the rate at which the outputs are switching (which is signal dependent). $I_{DR} = V_{DR}$ (C_O x f_O + C_1 x f_1 + ... + C_9 x f_9) where V_{DR} is the output driver power supply voltage, C_n is the total capacitance on the output pin, and f_n is the average frequency at which that pin is toggling.

Copyright © 2001–2013, Texas Instruments Incorporated

Converter Electrical Characteristics (continued)

The following specifications apply for $V_A = V_D = +3.3\ V_{DC}$, $V_{DR} = +2.5\ V_{DC}$, $V_{REF} = 1.4\ V_{DC}$, GAIN = OF = 0V, OS = 3.3V, V_{IN} (a.c. coupled) = FSR = 1.4 V_{P-P}, C_L = 15 pF, f_{CLK} = 40 MHz, 50% Duty Cycle, R_S = 50Ω, $t_{rc} = t_{fc}$ < 4 ns, NOT offset corrected. **Boldface limits apply for $T_A = T_{MIN}$ to T_{MAX}:** all other limits T_A = 25°C (1)

Symbol	Parameter	Conditions	Typical (2)	Limits (3)	Units (Limits)
PD	Power Consumption	PD = LOW, STBY = LOW, d.c. input	267	**305**	mW (max)
		PD = LOW, STBY = LOW, 1 MHz Input	270		mW
		PD = LOW, STBY = HIGH	30		mW
		PD = HIGH, STBY = LOW or HIGH	0.6		mW
PSRR1	Power Supply Rejection Ratio	Change in Full Scale with 3.0V to 3.6V Supply Change	90		dB
PSRR2	Power Supply Rejection Ratio	Rejection at output with 10.3 MHz, 250 mV_{P-P} Riding on V_A and V_D	52		dB

AC Electrical Characteristics OS = Low (Multiplexed Mode)

The following specifications apply for $V_A = V_D = +3.3\ V_{DC}$, $V_{DR} = +2.5V_{DC}$, $V_{REF} = 1.4\ V_{DC}$, GAIN = OF = 0V, OS = 0V, V_{IN} (a.c. coupled) = FSR = 1.4 V_{P-P}, C_L = 15 pF, f_{CLK} = 40 MHz, 50% Duty Cycle, R_S = 50Ω, $t_{rc} = t_{fc}$ < 4 ns, NOT offset corrected. **Boldface limits apply for $T_A = T_{MIN}$ to T_{MAX}:** all other limits T_A = 25°C (1)

Symbol	Parameter		Conditions	Typical (2)	Limits (3)	Units (Limits)
f_{CLK^1}	Maximum Clock Frequency			45	**40**	MHz (min)
f_{CLK^2}	Minimum Clock Frequency			20		MHz
	Duty Cycle			50	**45** **55**	% (min) % (max)
	Pipeline Delay (Latency)	I Data			2.5	Clock Cycles
		Q Data			3.0	Clock Cycles
t_r, t_f	Output Rise and Fall Times			5		ns
t_{OC}	Offset Correction Pulse Width				**10**	ns (min)
t_{OD}	Output Delay from CLK Edge to Data Valid			13	**19**	ns (max)
t_{DIQ}	I/Q Output Delay			13		ns
t_{SKEW}	I/Q to Data Skew			±200		ps
t_{AD}	Sampling (Aperture) Delay			2.2		ns
t_{AJ}	Aperture Jitter			<10		ps (rms)
t_{VALID}	Data Valid Time			7.5		ns
	Overrange Recovery Time		Differential V_{IN} step from 1.5V to 0V	50		ns

(1) The inputs are protected as shown below. Input voltage magnitude up to 300 mV beyond the supply rails will not damage this device. However, errors in the A/D conversion can occur if the input goes beyond the limits given in these tables.

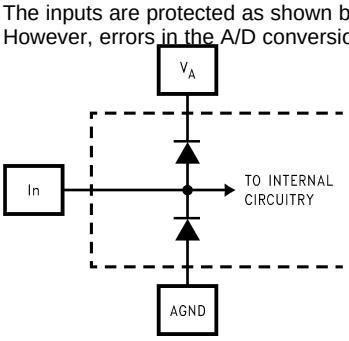

(2) Typical figures are at TJ = 25°C, and represent most likely parametric norms.
(3) Test limits are specified to TI's AOQL (Average Outgoing Quality Level). Performance is specified only at V_{REF} = 1.4V and a clock duty cycle of 50%. The limits for V_{REF} and clock duty cycle specify the range over which reasonable performance is expected. Tests are performed and limits specified with clock low and high levels of 0.3V and V_D−0.3V, respectively.

Copyright © 2001–2013, Texas Instruments Incorporated

AC Electrical Characteristics OS = Low (Multiplexed Mode) (continued)

The following specifications apply for $V_A = V_D = +3.3\ V_{DC}$, $V_{DR} = +2.5V_{DC}$, $V_{REF} = 1.4\ V_{DC}$, GAIN = OF = 0V, OS = 0V, V_{IN} (a.c. coupled) = FSR = 1.4 V_{P-P}, C_L = 15 pF, f_{CLK} = 40 MHz, 50% Duty Cycle, R_S = 50Ω, $t_{rc} = t_{fc}$ < 4 ns, NOT offset corrected.
Boldface limits apply for $T_A = T_{MIN}$ to T_{MAX}: all other limits T_A = 25°C (1)

Symbol	Parameter	Conditions	Typical (2)	Limits (3)	Units (Limits)
t_{WUPD}	PD Low to 1/2 LSB Accurate Conversion (Wake-Up Time)		<1		ms
t_{WUSB}	STBY Low to 1/2 LSB Accurate Conversion (Wake-Up Time)		800		ns

AC Electrical Characteristics OS = High (Parallel Mode)

The following specifications apply for $V_A = V_D = +3.3\ V_{DC}$, $V_{DR} = +2.5V_{DC}$, $V_{REF} = 1.4\ V_{DC}$, GAIN = OF = 0V, OS = +3.3V, V_{IN} (a.c. coupled) = FSR = 1.0 V_{P-P}, C_L = 15 pF, f_{CLK} = 40 MHz, 50% Duty Cycle, R_S = 50Ω, $t_{rc} = t_{fc}$ < 4 ns, NOT offset corrected.
Boldface limits apply for $T_A = T_{MIN}$ to T_{MAX}: all other limits T_A = 25°C (1)

Symbol	Parameter	Conditions	Typical (2)	Limits (3)	Units (Limits)
f_{CLK}^1	Maximum Clock Frequency		45	**40**	MHz (min)
f_{CLK}^2	Minimum Clock Frequency		20		MHz
	Duty Cycle		50	**45** **55**	% (min) % (max)
	Pipeline Delay (Latency)			**2.5**	Clock Cycles
t_r, t_f	Output Rise and Fall Times		9		ns
t_{OC}	OC Pulse Width			**10**	ns
t_{OD}	Output Delay from CLK Edge to Data Valid		16	**22**	ns (max)
t_{DIQ}	I/Q Output Delay		13		ns
t_{AD}	Sampling (Aperture) Delay		2.2		ns
t_{AJ}	Aperture Jitter		<10		ps (rms)
t_{VALID}	Data Valid Time		16		ns
	Overrange Recovery Time	Differential V_{IN} step from 1.5V to 0V	50		ns
t_{WUPD}	PD Low to 1/2 LSB Accurate Conversion (Wake-Up Time)		< 1		ms
t_{WUSB}	STBY Low to 1/2 LSB Accurate Conversion (Wake-Up Time)		800		ns

(1) The inputs are protected as shown below. Input voltage magnitude up to 300 mV beyond the supply rails will not damage this device. However, errors in the A/D conversion can occur if the input goes beyond the limits given in these tables.

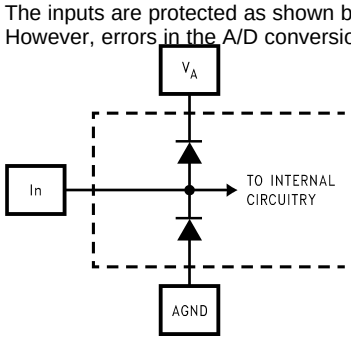

(2) Typical figures are at TJ = 25°C, and represent most likely parametric norms.
(3) Test limits are specified to TI's AOQL (Average Outgoing Quality Level). Performance is specified only at V_{REF} = 1.4V and a clock duty cycle of 50%. The limits for V_{REF} and clock duty cycle specify the range over which reasonable performance is expected. Tests are performed and limits specified with clock low and high levels of 0.3V and V_D−0.3V, respectively.

Timing Diagrams

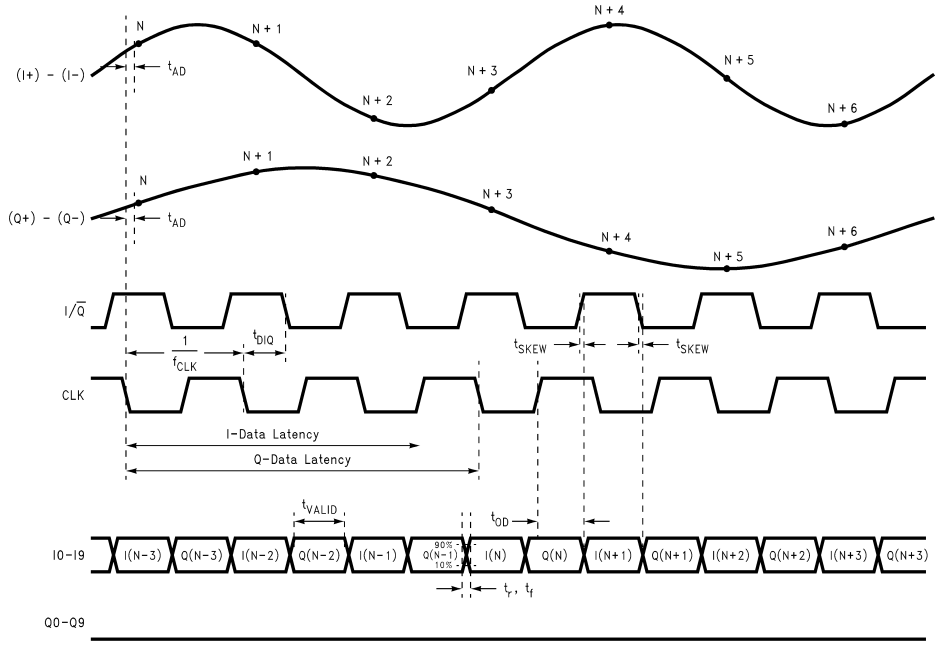

Figure 2. ADC10D040 Timing Diagram for Multiplexed Mode

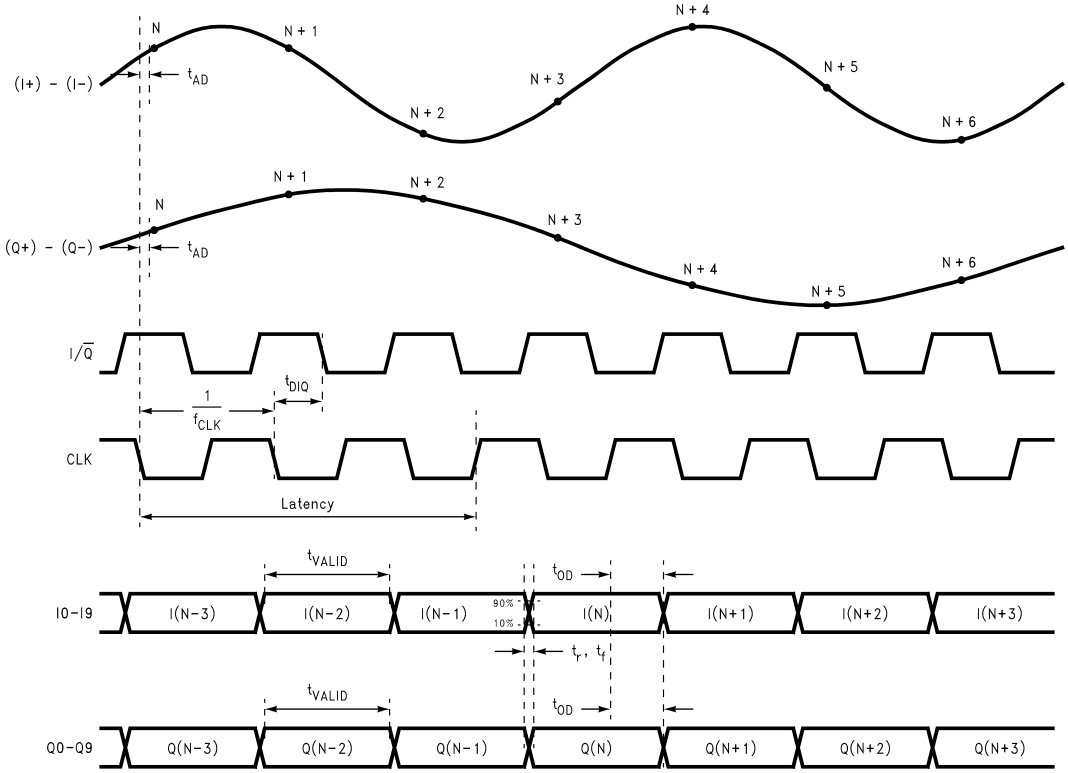

Figure 3. ADC10D040 Timing Diagram for Parallel Mode

Copyright © 2001–2013, Texas Instruments Incorporated

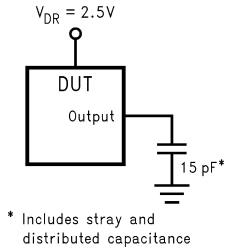

Figure 4. AC Test Circuit

Specification Definitions

APERTURE (SAMPLING) DELAY is that time required after the fall of the clock input for the sampling switch to open. The Sample/Hold circuit effectively stops capturing the input signal and goes into the "hold" mode t_{AD} after the clock goes low.

APERTURE JITTER is the variation in aperture delay from sample to sample. Aperture jitter shows up as input noise.

CLOCK DUTY CYCLE is the ratio of the time that the clock waveform is high to the total time of one clock period.

CROSSTALK is coupling of energy from one channel into the other channel.

DIFFERENTIAL NON-LINEARITY (DNL) is the measure of the maximum deviation from the ideal step size of 1 LSB. Measured at 40 MSPS with a ramp input.

EFFECTIVE NUMBER OF BITS (ENOB, or EFFECTIVE BITS) is another method of specifying Signal-to-Noise and Distortion Ratio, or SINAD. ENOB is defined as (SINAD − 1.76)/6.02 and says that the converter is equivalent to a perfect ADC of this (ENOB) number of bits.

FULL POWER BANDWIDTH (FPBW) is the frequency at which the magnitude of the reconstructed output fundamental drops 3 dB below its 1 MHz value.

GAIN ERROR is the difference between the ideal and actual differences between the input levels at which the first and last code transitions occur. That is, how far this difference is from Full Scale.

INTEGRAL NON LINEARITY (INL) is a measure of the maximum deviation of each individual code from a line drawn from negative full scale (½ LSB below the first code transition) through positive full scale (½ LSB above the last code transition). The deviation of any given code from this straight line is measured from the center of that code value. The end point test method is used. Measured at 40 MSPS with a ramp input.

INTERMODULATION DISTORTION (IMD) is the creation of spectral components that are not present in the input as a result of two sinusoidal frequencies being applied to the ADC input at the same time. It is defined as the ratio of the power in the second and third order intermodulation products to the total power in one of the original frequencies. IMD is usually expressed in dB.

LSB (LEAST SIGNIFICANT BIT) is the bit that has the smallest value of weight of all bits. This value is

$$m * V_{REF}/2^n \quad (1)$$

where "m" is the reference scale factor and "n" is the ADC resolution, which is 10 in the case of the ADC10D040. The value of "m" is determined by the logic level at the gain pin and has a value of 1 when the gain pin is at a logic low and a value of 2 when the gain pin is at a logic high.

MISSING CODES are those output codes that are skipped and will never appear at the ADC outputs. These codes cannot be reached with any input value.

MSB (MOST SIGNIFICANT BIT) is the bit that has the largest value or weight. Its value is one half of full scale.

OFFSET ERROR is a measure of how far the mid-scale transition point is from the ideal zero voltage input.

OUTPUT DELAY is the time delay after the rising edge of the input clock before the data update is present at the output pins.

Copyright © 2001–2013, Texas Instruments Incorporated

OVERRANGE RECOVERY TIME is the time required after the differential input voltages goes from 1.5V to 0V for the converter to recover and make a conversion with its rated accuracy.

PIPELINE DELAY (LATENCY) is the number of clock cycles between initiation of conversion and when that data is presented to the output driver stage. New data is available at every clock cycle, but the data output lags the input by the Pipeline Delay plus the Output Delay.

POWER SUPPLY REJECTION RATIO (PSRR) can be one of two specifications. PSRR1 (DC PSRR) is the ratio of the change in full scale gain error that results from a power supply voltage change from 3.0V to 3.6V. PSRR2 (AC PSRR) is measured with a 10 MHz, 250 mV_{P-P} signal riding upon the power supply and is the ratio of the signal amplitude on the power supply pins to the amplitude of that frequency at the output. PSRR is expressed in dB.

SIGNAL TO NOISE RATIO (SNR) is the ratio, expressed in dB, of the rms value of the fundamental signal at the output to the rms value of the sum of all other spectral components below one-half the sampling frequency, not including harmonics or d.c.

SIGNAL TO NOISE PLUS DISTORTION (S/(N+D) or SINAD) is the ratio, expressed in dB, of the rms value of the fundamental signal at the output to the rms value of all of the other spectral components below half the clock frequency, including harmonics but excluding d.c.

SPURIOUS FREE DYNAMIC RANGE (SFDR) is the difference, expressed in dB, between the rms values of the fundamental signal at the output and the peak spurious signal, where a spurious signal is any signal present in the output spectrum that is not present at the input.

TOTAL HARMONIC DISTORTION (THD) is the ratio, expressed in dB, of the total of the first nine harmonic levels at the output to the level of the fundamental at the output. THD is calculated as

$$THD = 20 \times \log \sqrt{\frac{f_2^2+f_3^2+f_4^2+f_5^2+f_6^2+f_7^2+f_8^2+f_9^2+f_{10}^2}{f_1^2}} \tag{2}$$

where f_1 is the RMS power of the fundamental (output) frequency and f_2 through f_{10} are the RMS power of the first 9 harmonic frequencies in the output spectrum.

Copyright © 2001–2013, Texas Instruments Incorporated

Typical Performance Characteristics

$V_A = V_D = 3.3V$, $V_{DR} = 2.5V$, $f_{CLK} = 40$ MHz, $f_{IN} = 10.4$ MHz, unless otherwise specified

Typical INL

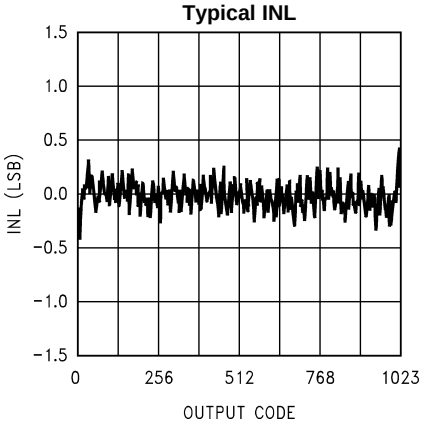

Figure 5.

INL vs. V_A

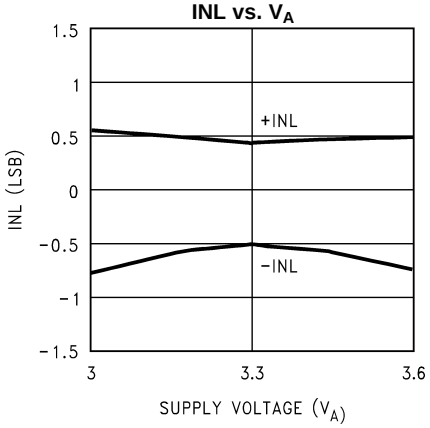

Figure 6.

INL vs. V_{REF}

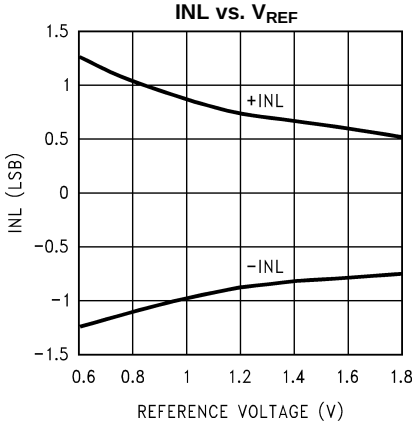

Figure 7.

INL vs. f_{CLK}

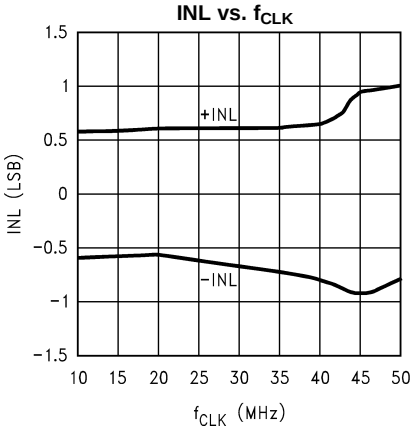

Figure 8.

INL vs. Clock Duty Cycle

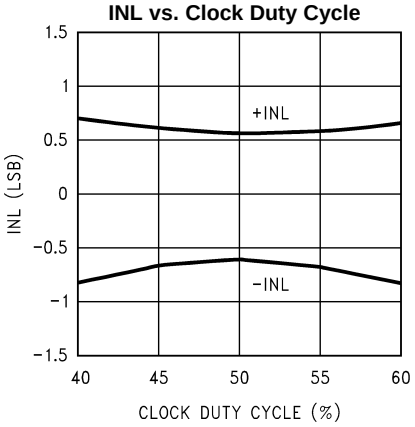

Figure 9.

INL vs. Temperature

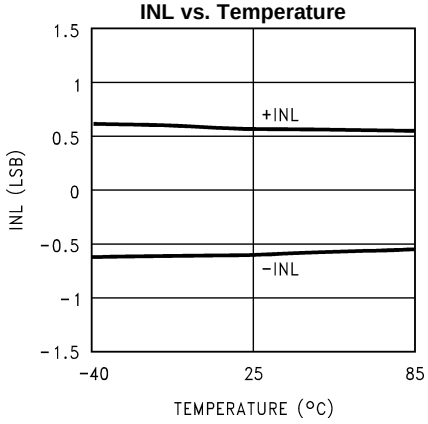

Figure 10.

Typical Performance Characteristics (continued)

$V_A = V_D = 3.3V$, $V_{DR} = 2.5V$, $f_{CLK} = 40$ MHz, $f_{IN} = 10.4$ MHz, unless otherwise specified

Typical DNL

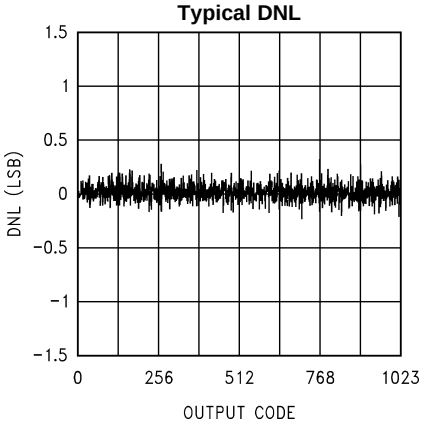

Figure 11.

DNL vs. V_A

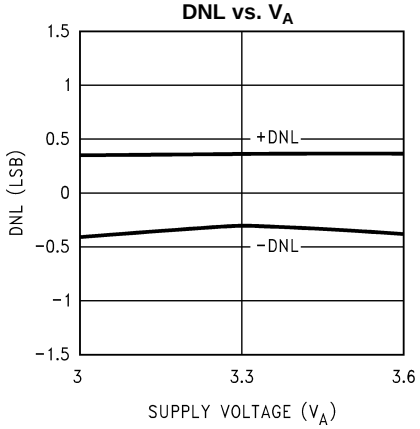

Figure 12.

DNL vs. V_{REF}

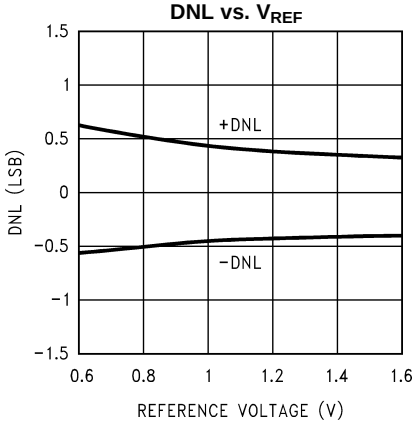

Figure 13.

DNL vs. f_{CLK}

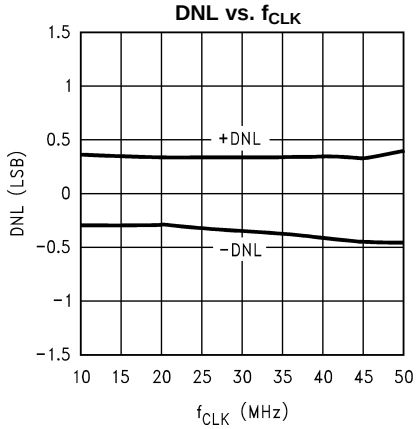

Figure 14.

SNR, SINAD & SFDR vs. V_A

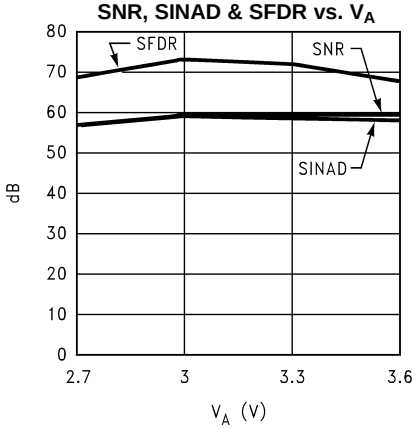

Figure 15.

DISTORTION vs. V_A

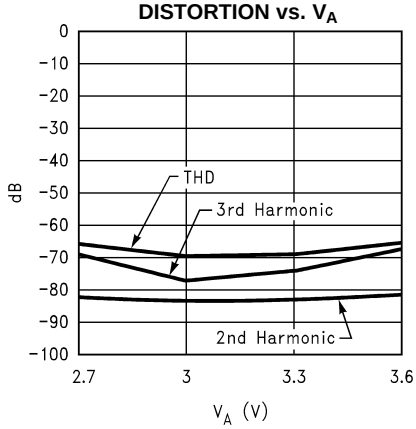

Figure 16.

Copyright © 2001–2013, Texas Instruments Incorporated

Typical Performance Characteristics (continued)

$V_A = V_D = 3.3V$, $V_{DR} = 2.5V$, $f_{CLK} = 40$ MHz, $f_{IN} = 10.4$ MHz, unless otherwise specified

DNL vs. Clock Duty Cycle

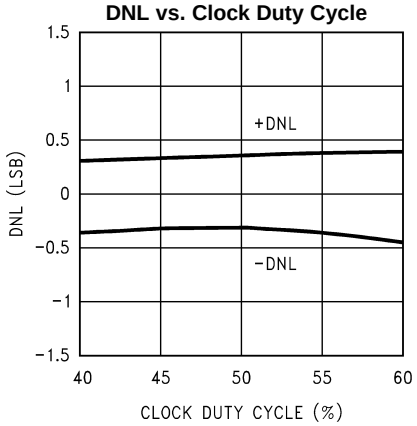

Figure 17.

DNL vs. Temperature

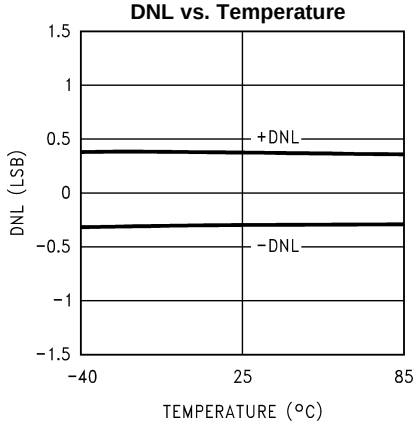

Figure 18.

SNR, SINAD & SFDR vs. V_{REF}

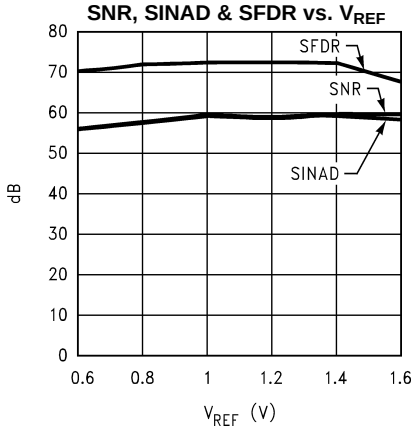

Figure 19.

DISTORTION vs. V_{REF}

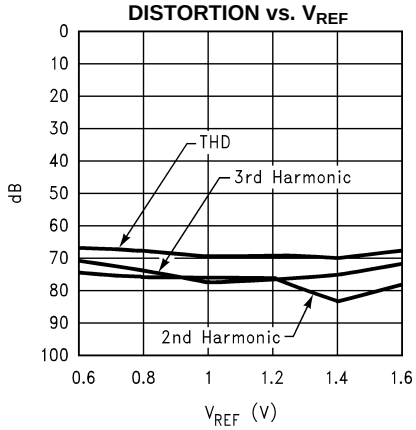

Figure 20.

SNR, SINAD & SFDR vs. f_{CLK}

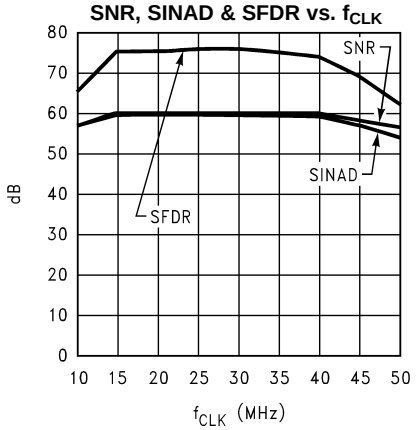

Figure 21.

DISTORTION vs. f_{CLK}

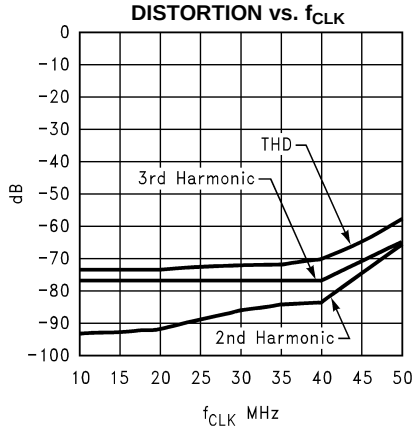

Figure 22.

Typical Performance Characteristics (continued)

$V_A = V_D = 3.3V$, $V_{DR} = 2.5V$, $f_{CLK} = 40$ MHz, $f_{IN} = 10.4$ MHz, unless otherwise specified

SNR, SINAD & SFDR vs. f_{IN}

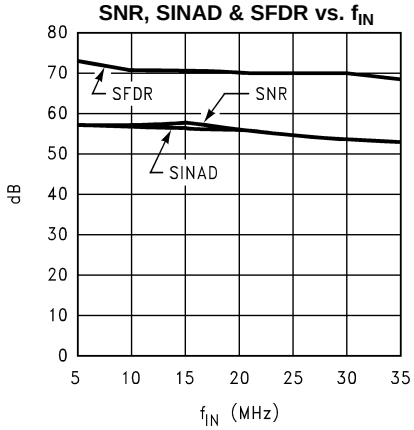

Figure 23.

DISTORTION vs. f_{IN}

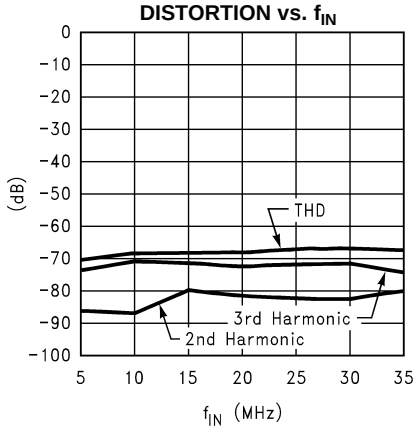

Figure 24.

SNR, SINAD & SFDR vs. Temperature

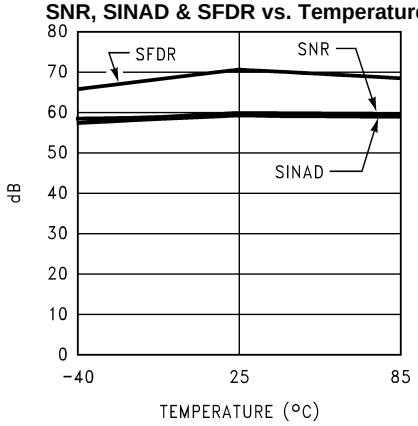

Figure 25.

DISTORTION vs. Temperature

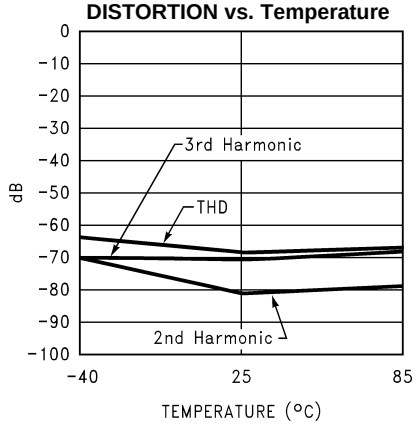

Figure 26.

CROSSTALK vs. f_{IN}

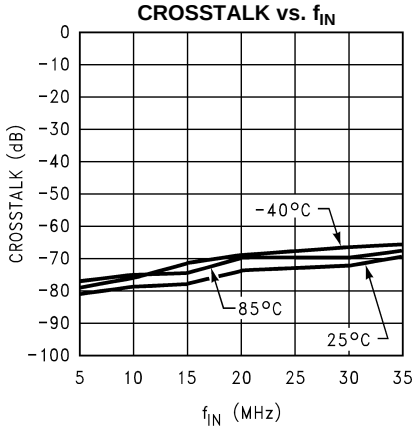

Figure 27.

CROSSTALK vs. Temperature

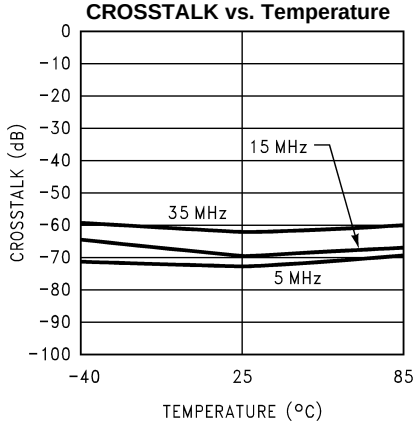

Figure 28.

Copyright © 2001–2013, Texas Instruments Incorporated

Typical Performance Characteristics (continued)

$V_A = V_D = 3.3V$, $V_{DR} = 2.5V$, $f_{CLK} = 40$ MHz, $f_{IN} = 10.4$ MHz, unless otherwise specified

Total Power vs. TEMP

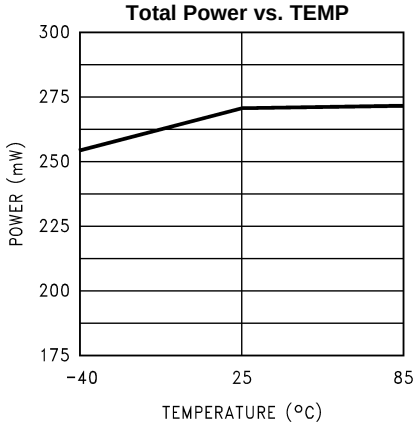

Figure 29.

Spectral Response at f_{IN} = 10.4 MHz

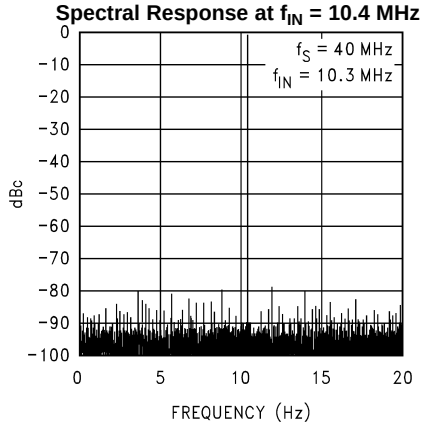

Figure 30.

IMD Response f_{IN} = 8.5 MHz, 9.5 MHz

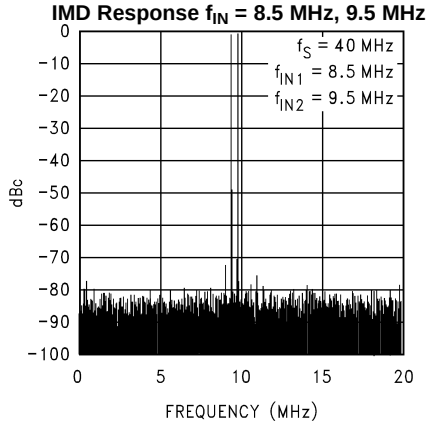

Figure 31.

FUNCTIONAL DESCRIPTION

Using a subranging architecture, the ADC10D040 achieves 9.4 effective bits over the entire Nyquist band at 40 MSPS while consuming just 267 mW. The use of an internal sample-and-hold amplifier (SHA) not only enables this sustained dynamic performance, but also lowers the converter's input capacitance and reduces the number of external components required.

Analog signals at the “I” and “Q” inputs that are within the voltage range set by V_{REF} and the GAIN pin are digitized to ten bits at up to 45 MSPS. V_{REF} has a range of 0.6V to 1.6V, providing a differential peak-to-peak input range of 0.6 V_{P-P} to 1.6 V_{P-P} with the GAIN pin at a logic low, or a differential input range of 1.2 V_{P-P} to 3.2 V_{P-P} with the GAIN pin at a logic high. Differential input voltages less than $-V_{REF}/2$ with the GAIN pin low, or less than $-V_{REF}$ with the GAIN pin high will cause the output word to indicate a negative full scale. Differential input voltages greater than $V_{REF}/2$ with the GAIN pin low, or greater than V_{REF} with the GAIN pin high, will cause the output word to indicate a positive full scale.

Both “I” and “Q” channels are sampled simultaneously on the falling edge of the clock input, while the timing of the data output depends upon the mode of operation.

In the parallel mode, the “I” and “Q” output busses contain the conversion result for their respective inputs. The “I” and “Q” channel data are present and valid at the data output pins t_{OD} after the rising edge of the input clock. In the multiplexed mode, “I” channel data is available at the digital outputs t_{OD} after the rise of the clock edge, while the “Q” channel data is available at the I0 through I9 digital outputs t_{OD} after the fall of the clock. However, a delayed I/$\overline{Q}$ output signal should be used to latch the output for best, most consistent results.

Data latency in the parallel mode is 2.5 clock cycles. In the multiplexed mode data latency is 2.5 clock cycles for the “I” channel and 3.0 clock cycles for the “Q” channel. The ADC10D040 will convert as long as the clock signal is present and the PD and STBY pins are low.

Throughout this discussion,V_{CM} refers to the Common Mode input voltage of the ADC10D040 while V_{CMO} refers to its Common Mode output voltage.

Applications Information

THE ANALOG SIGNAL INPUTS

Each of the analog inputs of the ADC10D040 consists of a switch (transmission gate) followed by a switched capacitor amplifier. The capacitance seen at each input pin changes with the clock level, appearing as about 2 pF when the clock is low, and about 5 pF when the clock is high. This switching action causes analog input current spikes that work with the input source impedance to produce voltage spikes.

The LMH6702 and the CLC428 dual op-amp have been found to be a good amplifiers to drive the ADC10D040 because of their wide bandwidth and low distortion. They also have good Differential Gain and Differential Phase performance.

Care should be taken to avoid driving the input beyond the supply rails, even momentarily, as during power-up.

The ADC10D040 is designed for differential input signals for best performance. With a 1.4V reference and the GAIN pin at a logic low, differential input signals up to 1.4 V_{P-P} are digitized. See Figure 32. For differential signals, the input common mode is expected to be about 1.5V, but the inputs are not sensitive to the common-mode voltage and can be anywhere within the supply rails (ground to V_A) with little or no performance degradation, as long as the signal swing at the individual input pins is no more than 300 mV beyond the supply rails.

Single-ended drive is not recommended as it can result in degraded dynamic performance and faulty operation. If single-ended input drive is absolutely required, it is recommended that a sample rate above 30 MSPS be used. If the desired sample rate is lower than this, operate the ADC10D040 at a multiple of the desired rate and decimate the output (use every "*n*th" sample).

For single-ended drive, operate the ADC10D040 with the GAIN pin at a logic low, connect one pin of the input pair to 1.5V (V_{CM}) through a resistor of 1k to 10 k Ohms, bypassing this input pin to ground with a 1 µF capacitor. Drive the other input pin of the input pair with 1.0 V_{P-P} centered around 1.5V.

Copyright © 2001–2013, Texas Instruments Incorporated

Because of the larger signal swing at one input for single-ended operation, distortion performance will not be as good as with a differential input signal. Alternatively, single-ended to differential conversion with a transformer provides a quick, easy solution for those applications not requiring response to d.c. and low frequencies. See Figure 33. The 36Ω resistors and 56 pF capacitor values are chosen to provide a cutoff frequency near the clock frequency to compensate for the effects of input sampling. A lower time constant should be used for undersampling applications.

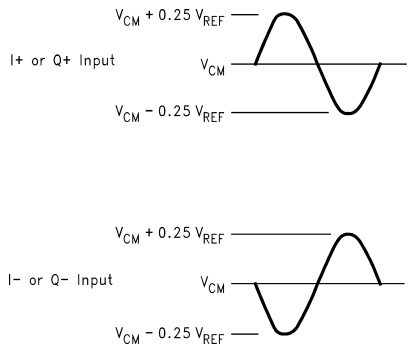

The signal swing should not cause any pin to experience a swing more than 300 mV beyond the supply rails.

Figure 32. The ADC10D040 is designed for use with differential signals of 1.4 V_{P-P} with a common mode voltage of 1.5V.

REFERENCE INPUTS

The V_{RP} and V_{RN} pins should each be bypassed with a 5 µF (or larger) tantalum or electrolytic capacitor and a 0.1 µF ceramic capacitor. Use these pins only for bypassing. DO NOT connect anything else to these pins.

Figure 34 shows a simple reference biasing scheme with minimal components. While this circuit will suffice for many applications, the value of the reference voltage will depend upon the supply voltage.

The circuit of Figure 35 is an improvement over the circuit of Figure 34 because the reference voltage is independent of supply voltage. This reduces problems of reference voltage variability. The reference voltage at the V_{REF} pin should be bypassed to AGND with a 5 µF (or larger) tantalum or electrolytic capacitor and a 0.1 µF ceramic capacitor.

The circuit of Figure 36 may be used if it is desired to obtain a precise reference voltage not available with a fixed reference source. The 604Ω and 1.40k resistors can be replaced with a potentiometer, if desired.

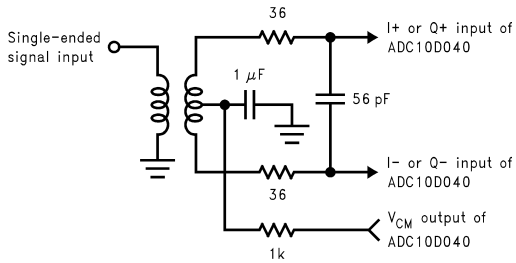

Figure 33. Use of an input transformer for single-ended to differential conversion can simplify circuit design for single-ended signals.

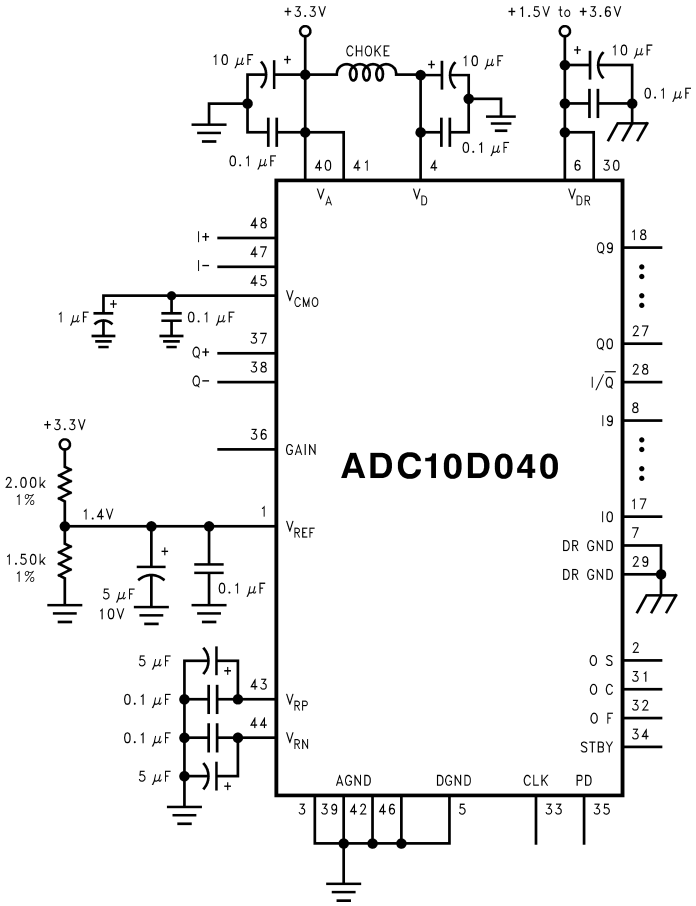

Figure 34. Simple Reference Biasing

Copyright © 2001–2013, Texas Instruments Incorporated

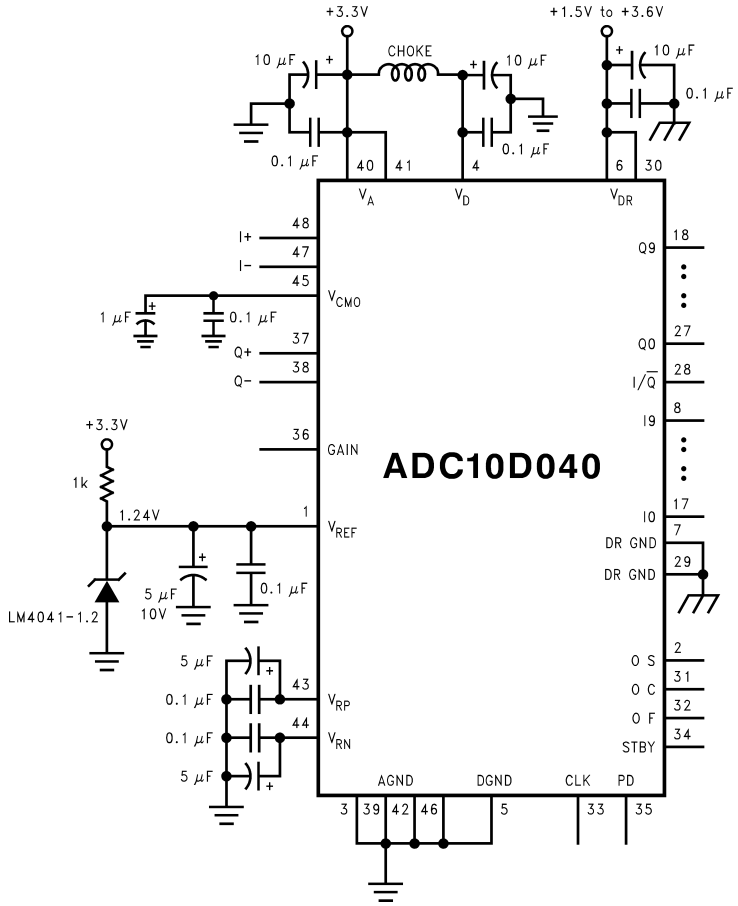

Figure 35. Improved Low Component Count Reference Biasing

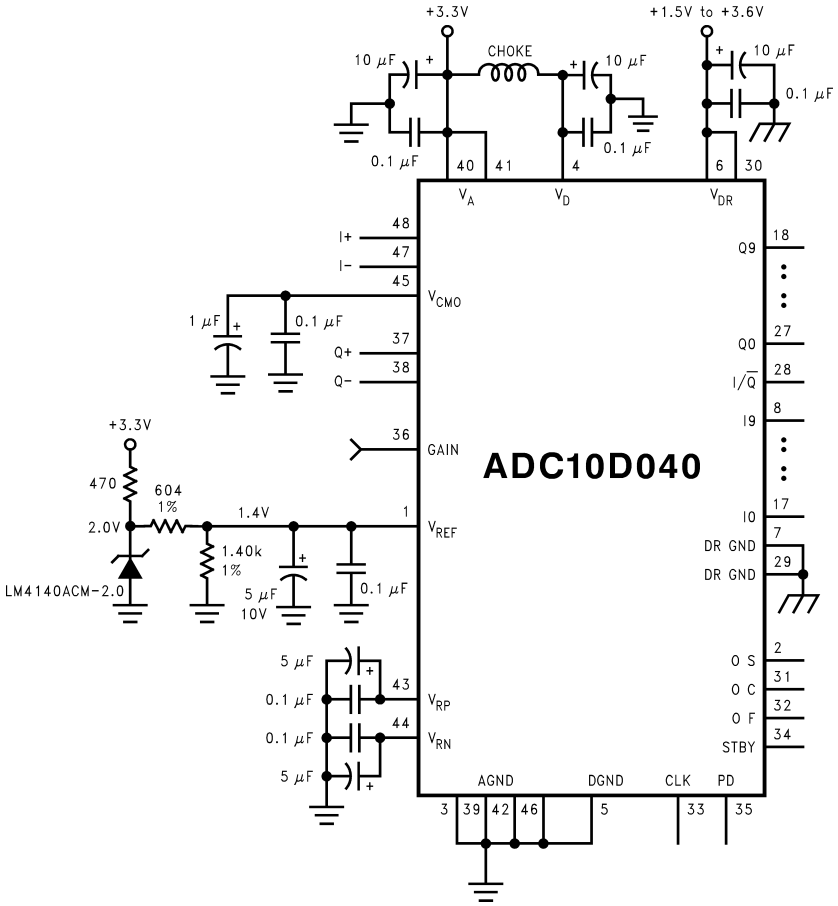

Figure 36. Setting An Accurate Reference Voltage

Copyright © 2001–2013, Texas Instruments Incorporated

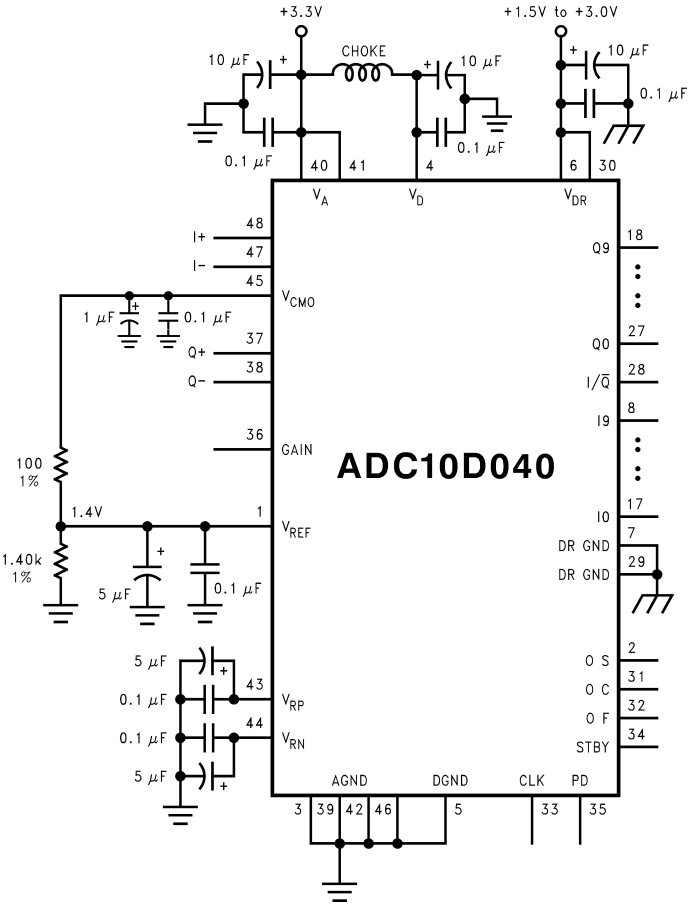

Figure 37. The V_{CMO} output pin may be used as an internal reference source if its output is not loaded excessively.

The V_{CMO} output can be used as the ADC reference source as long as care is taken to prevent excessive loading of this pin. However, the V_{CMO} output was not designed to be a precision reference and has move variability than does a precision reference. Refer to V_{CMO}, Common Mode Voltage Output, in the Electrical Characteristics table. Since the reference input of the ADC10D040 is buffered, there is virtually no loading on the V_{CMO} output by the V_{REF} pin. While the ADC10D040 will work with a 1.5V reference voltage, it is fully specified for a 1.4V reference. To use the V_{CMO} for a reference voltage at 1.4V, the 1.5V V_{CMO} output needs to be divided down. The divider resistor values need to be carefully chosen to prevent excessive V_{CMO} loading. See Figure 37. While the average temperature coefficient of V_{CMO} is 30 ppm/°C, that temperature coefficient can be broken down to a typical 70 ppm/°C between −40°C and +25°C and a typical −11 ppm/°C between +25°C and +85°C.

Reference Voltage

The reference voltage should be within the range specified in the Operating Ratings table (0.6V to 1.6V). A reference voltage that is too low could result in a noise performance that is less than desired because the quantization level falls below other noise sources. On the other hand, a reference voltage that is too high means that an input signal that produces a full scale output uses such a large input range that the input stage is less linear, resulting in a degradation of distortion performance. Also, for large reference voltages, the internal ladder buffer runs out of head-room, leading to a reduction of gain in that buffer and causing gain error degradation.

The Reference bypass pins V_{RP} and V_{RN} are output compensated and should each be bypassed with a parallel combination of a 5 µF (minimum) and 0.1 µF capacitors.

V_{CMO} Output

The V_{CMO} output pin is intended to provide a common mode bias for the differential input pins of the ADC10D040. It can also be used as a voltage reference source. Care should be taken, however, to avoid loading this pin with more than 1 mA. A load greater than this could result in degraded long term and temperature stability of this voltage. The V_{CMO} pin is output compensated and should be bypassed with a 1 µF/0.1 µF combination, minimum. See REFERENCE INPUTS for more information on using the V_{CMO} output as a reference source.

DIGITAL INPUT PINS

The seven digital input pins are used to control the function of the ADC10D040.

The ADC Clock (CLK) Input

The clock (CLK) input is common to both A/D converters. This pin is CMOS/LVTTL compatible with a threshold of about $V_A/2$. Although the ADC10D040 is tested and its performance is specified with a 40 MHz clock, it typically will function well with low-jitter clock frequencies from 20 MHz to 45 MHz. The analog inputs I = (I+) – (I−) and Q = (Q+) – (Q−) are simultaneously sampled on the falling edge of this input to ensure the best possible aperture delay match between the two channels.

Low Sample Rate Considerations

While the ADC10D040 will typically function well with sample rates below 20 MSPS, it is important to note that it is possible for some production lots not to perform well below 20 MSPS. To ensure adequate performance over lot to lot and over temperature extremes, we recommend not operating the ADC10D040 at sample rates below 20 MSPS.

Clock Termination

The clock source should be series terminated to match the clock source impedance with the characteristic impedance of the clock line, Z_O. It may also be necessary to a.c. terminate the ADC clock pin with a series RC to ground. This series network should be located near the ADC10D040 clock pin but on the far side of that pin as seen from the clock source. The resistor value should equal the characteristic impedance, Z_O, of the clock line and the capacitor should have a value such that $C \times Z_O \geq 4 \times t_{PD}$, where t_{PD} is the time of propagation of the clock signal from its source to the ADC clock pin. The typical propagation rate on a board of FR4 material is about 150 ps/inch. The rise and fall times of the clock supplied to the ADC clock pin should be no more than 4 ns.

Output Bus Select (OS) Pin

The Output Bus Select (OS) pin determines whether the ADC10D040 is in the parallel or multiplexed mode of operation. A logic high at this pin puts the device into the parallel mode of operation where “I” and “Q” data appear at their respective output buses. A logic low at this pin puts the device into the multiplexed mode of operation where the “I” and “Q” data are multiplexed onto the “I” output bus and the “Q” output lines all remain at a logic low.

Offset Correct (OC) Pin

The Offset Correct (OC) pin is used to initiate an offset correction sequence. This procedure should be done after power up and need not be performed again unless power to the ADC10D040 is interrupted. An independent offset correction sequence for each converter is initiated when there is a low-to-high transition at the OC pin. This sequence takes 34 clock cycles to complete, during which time 32 conversions are taken and averaged. The result is subtracted from subsequent conversions. Because the offset correction is performed digitally at the output of the ADC, the output range of the ADC is reduced by the offset amount.

Each input pair should have a 0V differential voltage value during this entire 34 clock period, but the “I” and “Q” input common mode voltages do not have to be equal to each other. Because of the uncertainty as to exactly when the correction sequence starts, it is best to allow 35 clock periods for this sequence.

Output Format (OF) Pin

The Output Format (OF) pin provides a choice of offset binary or 2's complement output formatting. With this pin at a logic low, the output format is offset binary. With this pin at a logic high, the output format is 2's complement.

 Copyright © 2001–2013, Texas Instruments Incorporated

Standby (STBY) Pin

The Standby (STBY) pin may be used to put the ADC10D040 into a low power mode where it consumes just 30 mW and can quickly be brought to full operation. The device operates normally with a logic low on this and the PD pins.

While in the Standby mode the data outputs contain the results of the last conversion before going into this Mode.

Power Down (PD) Pin

The Power Down (PD) pin puts the device into a low-power “sleep” state where it consumes less than 1 mW when the PD pin is at a logic high. Power consumption is reduced more when the PD pin is high than when the STBY pin is high, but recovery to full operation is much quicker from the standby state than it is from the power down state. When the STBY and PD pins are both high, the ADC10D040 is in the power down mode.

While in the Power Down mode the data outputs contain the results of the last conversion before going into this mode. The output pins are always in the active state. That is, the output pins do not have a high impedance state.

GAIN Pin

The GAIN pin sets the internal signal gain of the “I” and “Q” inputs. With this pin at a logic low, the full scale differential peak-to-peak input signal is equal to V_{REF}. With the GAIN pin at a logic high, the full scale differential peak-to-peak input signal is equal to 2 times V_{REF}.

INPUT/OUTPUT RELATIONSHIP ALTERNATIVES

The GAIN pin of the ADC10D040 offers input range selection, while the OF pin offers a choice of offset binary or 2's complement output formatting.

The relationship between the GAIN, OF, analog inputs and the output code are as defined in Table 1. Keep in mind that the input signals must not exceed the power supply rails.

Table 1. ADC10D040 Input/Output Relationships

GAIN	OF	I+ / Q+	I− / Q−	Output Code
0	0	$V_{CM} + 0.25*V_{REF}$	$V_{CM} - 0.25*V_{REF}$	11 1111 1111
0	0	V_{CM}	V_{CM}	10 0000 0000
0	0	$V_{CM} - 0.25*V_{REF}$	$V_{CM} + 0.25*V_{REF}$	00 0000 0000
0	1	$V_{CM} + 0.25*V_{REF}$	$V_{CM} - 0.25*V_{REF}$	01 1111 1111
0	1	V_{CM}	V_{CM}	00 0000 0000
0	1	$V_{CM} - 0.25*V_{REF}$	$V_{CM} + 0.25*V_{REF}$	10 0000 0000
1	0	$V_{CM} + 0.5*V_{REF}$	$V_{CM} - 0.5*V_{REF}$	11 1111 1111
1	0	V_{CM}	V_{CM}	10 0000 0000
1	0	$V_{CM} - 0.5*V_{REF}$	$V_{CM} + 0.5*V_{REF}$	00 0000 0000
1	1	$V_{CM} + 0.5*V_{REF}$	$V_{CM} - 0.5*V_{REF}$	01 1111 1111
1	1	V_{CM}	V_{CM}	00 0000 0000
1	1	$V_{CM} - 0.5*V_{REF}$	$V_{CM} + 0.5*V_{REF}$	10 0000 0000

POWER SUPPLY CONSIDERATIONS

A/D converters draw sufficient transient current to corrupt their own power supplies if not adequately bypassed. A 10 µF to 50 µF tantalum or aluminum electrolytic capacitor should be placed within half an inch (1.2 centimeters) of the A/D power pins, with a 0.1 µF ceramic chip capacitor placed as close as possible to each of the converter's power supply pins. Leadless chip capacitors are preferred because they have low lead inductance.

While a single voltage source should be used for the analog and digital supplies of the ADC10D040, these supply pins should be well isolated from each other to prevent any digital noise from being coupled to the analog power pins. A choke is recommended between the V_A and V_D supply lines. V_{DR} should have a separate supply from V_A and V_D to avoid noise coupling into the input. Be sure to bypass V_{DR}.

Copyright © 2001–2013, Texas Instruments Incorporated

The V_{DR} pin is completely isolated from the other supply pins. Because of this isolation, a separate supply can be used for these pins. This V_{DR} supply can be significantly lower than the three volts used for the other supplies, easing the interface to lower voltage digital systems. Using a lower voltage for this supply can also reduce the power consumption and noise associated with the output drivers.

The converter digital supply should **not** be the supply that is used for other digital circuitry on the board. It should be the same supply used for the ADC10D040 analog supply.

As is the case with all high speed converters, the ADC10D040 should be assumed to have little high frequency power supply rejection. A clean analog power source should be used.

No pin should ever have a voltage on it that is more than 300 mV in excess of the supply voltages or below ground, not even on a transient basis. This can be a problem upon application of power to a circuit and upon turn off of the power source. Be sure that the supplies to circuits driving the CLK, or any other digital or analog inputs do not come up any faster than does the voltage at the ADC10D040 power pins.

LAYOUT AND GROUNDING

Proper routing of all signals and proper ground techniques are essential to ensure accurate conversion. Separate analog and digital ground planes may be used if adequate care is taken with signal routing, but may result in EMI/RFI. A single ground plane with proper component placement will yield good results while minimizing EMI/RFI.

Analog and digital ground current paths should not coincide with each other as the common impedance will cause digital noise to be added to analog signals. Accordingly, traces carrying digital signals should be kept as far away from traces carrying analog signals as is possible. Power should be routed with traces rather than the use of a power plane. The analog and digital power traces should be kept well away from each other. All power to the ADC10D040, except V_{DR}, should be considered analog. The DR GND pin should be considered a digital ground and not be connected to the ground plane in close proximity with the other ground pins of the ADC10D040.

Each bypass capacitor should be located as close to the appropriate converter pin as possible and connected to the pin and the appropriate ground plane with short traces. The analog input should be isolated from noisy signal traces to avoid coupling of spurious signals into the input. Any external component (e.g., a filter capacitor) connected between the converter's input and ground should be connected to a very clean point in the ground return.

The clock line should be properly terminated, as discussed in Clock Termination, and be as short as possible.

Figure 38 gives an example of a suitable layout and bypass capacitor placement. All analog circuitry (input amplifiers, filters, reference components, etc.) and interconnections should be placed in an area reserved for analog circuitry. All digital circuitry and I/O lines should be placed in an area reserved for digital circuitry. Violating these rules can result in digital noise getting into the analog circuitry, which will degrade accuracy and dynamic performance (THD, SNR, SINAD).

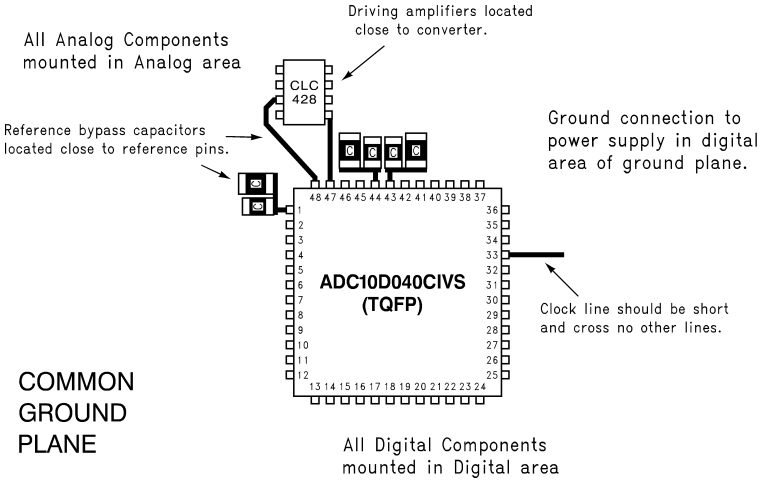

Figure 38. An Acceptable Layout Pattern

Copyright © 2001–2013, Texas Instruments Incorporated

DYNAMIC PERFORMANCE

The ADC10D040 is a.c. tested and its dynamic performance is specified. To meet the published specifications, the clock source driving the CLK input must be free of jitter. For best dynamic performance, isolating the ADC clock from any digital circuitry should be done with adequate buffers, as with a clock tree. See Figure 39.

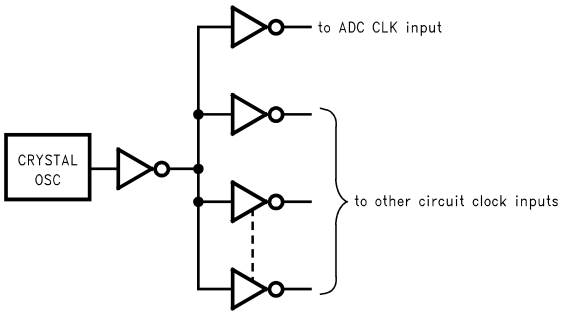

Figure 39. Isolating the ADC Clock from Digital Circuitry

COMMON APPLICATION PITFALLS

Driving the inputs (analog or digital) beyond the power supply rails. For proper operation, no input should go more than 300 mV beyond the supply pins, Exceeding these limits on even a transient basis can cause faulty or erratic operation. It is not uncommon for high speed digital circuits (e.g., 74F and 74AC devices) to exhibit overshoot and undershoot that goes a few hundred millivolts beyond the supply rails. A resistor of 50Ω to 100Ω in series with the offending digital input, close to the source, will usually eliminate the problem.

Care should be taken not to overdrive the inputs of the ADC10D040 (or any device) with a device that is powered from supplies outside the range of the ADC10D040 supply. Such practice may lead to conversion inaccuracies and even to device damage.

Attempting to drive a high capacitance digital data bus. The more capacitance the output drivers have to charge for each conversion, the more instantaneous digital current is required from V_{DR} and DR GND. These large charging current spikes can couple into the analog section, degrading dynamic performance. Adequate bypassing and attention to board layout will reduce this problem. Buffering the digital data outputs (with a 74ACTQ841, for example) may be necessary if the data bus to be driven is heavily loaded. Dynamic performance can also be improved by adding series resistors of 47Ω to 56Ω at each digital output, close to the ADC output pins.

Using a clock source with excessive jitter. This will cause the sampling interval to vary, causing excessive output noise and a reduction in SNR and SINAD performance. The use of simple gates with RC timing as a clock source is generally inadequate.

Using the same voltage source for V_D and external digital logic. As mentioned in POWER SUPPLY CONSIDERATIONS, V_D should use the same power source used by V_A and other analog components, but should be decoupled from V_A.

REVISION HISTORY

Changes from Revision F (March 2013) to Revision G	Page
• Changed layout of National Data Sheet to TI format	27

Copyright © 2001–2013, Texas Instruments Incorporated

PACKAGING INFORMATION

Orderable Device	Status (1)	Package Type	Package Drawing	Pins	Package Qty	Eco Plan (2)	Lead finish/ Ball material (6)	MSL Peak Temp (3)	Op Temp (°C)	Device Marking (4/5)	Samples
ADC10D040CIVS/NOPB	ACTIVE	TQFP	PFB	48	250	RoHS & Green	SN	Level-3-260C-168 HR	-40 to 85	10D040 CIVS	Samples

(1) The marketing status values are defined as follows:
ACTIVE: Product device recommended for new designs.
LIFEBUY: TI has announced that the device will be discontinued, and a lifetime-buy period is in effect.
NRND: Not recommended for new designs. Device is in production to support existing customers, but TI does not recommend using this part in a new design.
PREVIEW: Device has been announced but is not in production. Samples may or may not be available.
OBSOLETE: TI has discontinued the production of the device.

(2) **RoHS:** TI defines "RoHS" to mean semiconductor products that are compliant with the current EU RoHS requirements for all 10 RoHS substances, including the requirement that RoHS substance do not exceed 0.1% by weight in homogeneous materials. Where designed to be soldered at high temperatures, "RoHS" products are suitable for use in specified lead-free processes. TI may reference these types of products as "Pb-Free".
RoHS Exempt: TI defines "RoHS Exempt" to mean products that contain lead but are compliant with EU RoHS pursuant to a specific EU RoHS exemption.
Green: TI defines "Green" to mean the content of Chlorine (Cl) and Bromine (Br) based flame retardants meet JS709B low halogen requirements of <=1000ppm threshold. Antimony trioxide based flame retardants must also meet the <=1000ppm threshold requirement.

(3) MSL, Peak Temp. - The Moisture Sensitivity Level rating according to the JEDEC industry standard classifications, and peak solder temperature.

(4) There may be additional marking, which relates to the logo, the lot trace code information, or the environmental category on the device.

(5) Multiple Device Markings will be inside parentheses. Only one Device Marking contained in parentheses and separated by a "~" will appear on a device. If a line is indented then it is a continuation of the previous line and the two combined represent the entire Device Marking for that device.

(6) Lead finish/Ball material - Orderable Devices may have multiple material finish options. Finish options are separated by a vertical ruled line. Lead finish/Ball material values may wrap to two lines if the finish value exceeds the maximum column width.

Important Information and Disclaimer: The information provided on this page represents TI's knowledge and belief as of the date that it is provided. TI bases its knowledge and belief on information provided by third parties, and makes no representation or warranty as to the accuracy of such information. Efforts are underway to better integrate information from third parties. TI has taken and continues to take reasonable steps to provide representative and accurate information but may not have conducted destructive testing or chemical analysis on incoming materials and chemicals. TI and TI suppliers consider certain information to be proprietary, and thus CAS numbers and other limited information may not be available for release.

In no event shall TI's liability arising out of such information exceed the total purchase price of the TI part(s) at issue in this document sold by TI to Customer on an annual basis.

TRAY

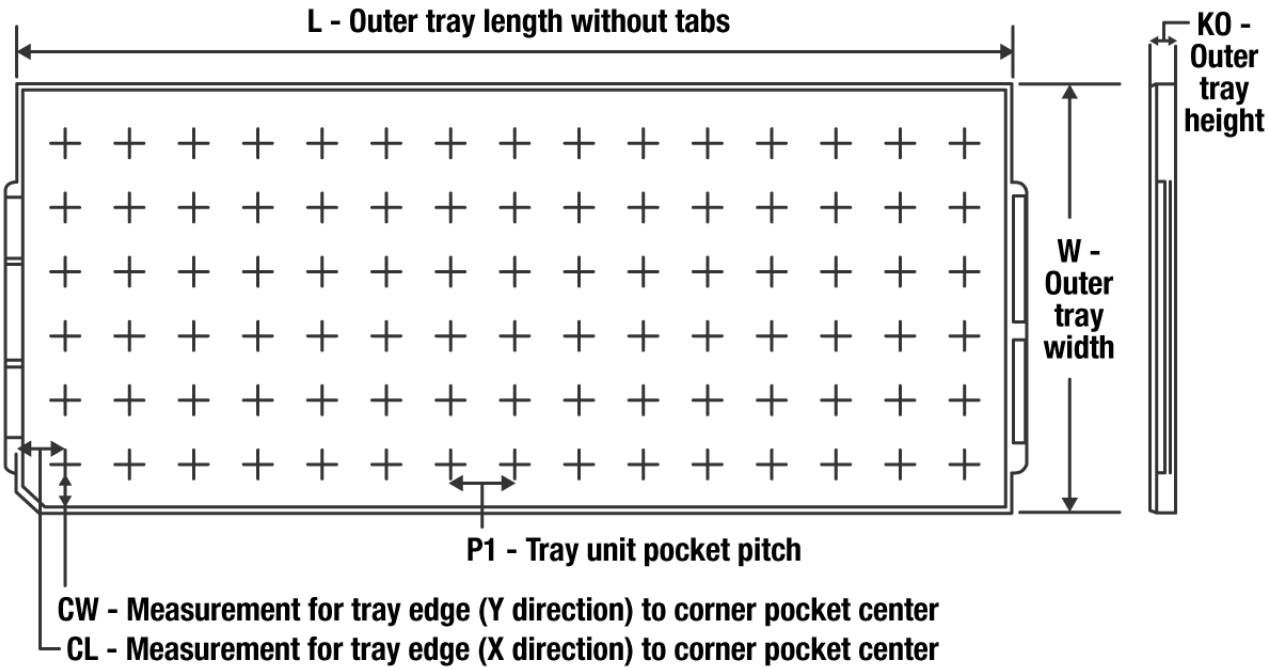

Chamfer on Tray corner indicates Pin 1 orientation of packed units.

*All dimensions are nominal

Device	Package Name	Package Type	Pins	SPQ	Unit array matrix	Max temperature (°C)	L (mm)	W (mm)	K0 (µm)	P1 (mm)	CL (mm)	CW (mm)
ADC10D040CIVS/NOPB	PFB	TQFP	48	250	10 x 25	150	315	135.9	7620	12.2	11.1	11.25

PFB (S-PQFP-G48) **PLASTIC QUAD FLATPACK**

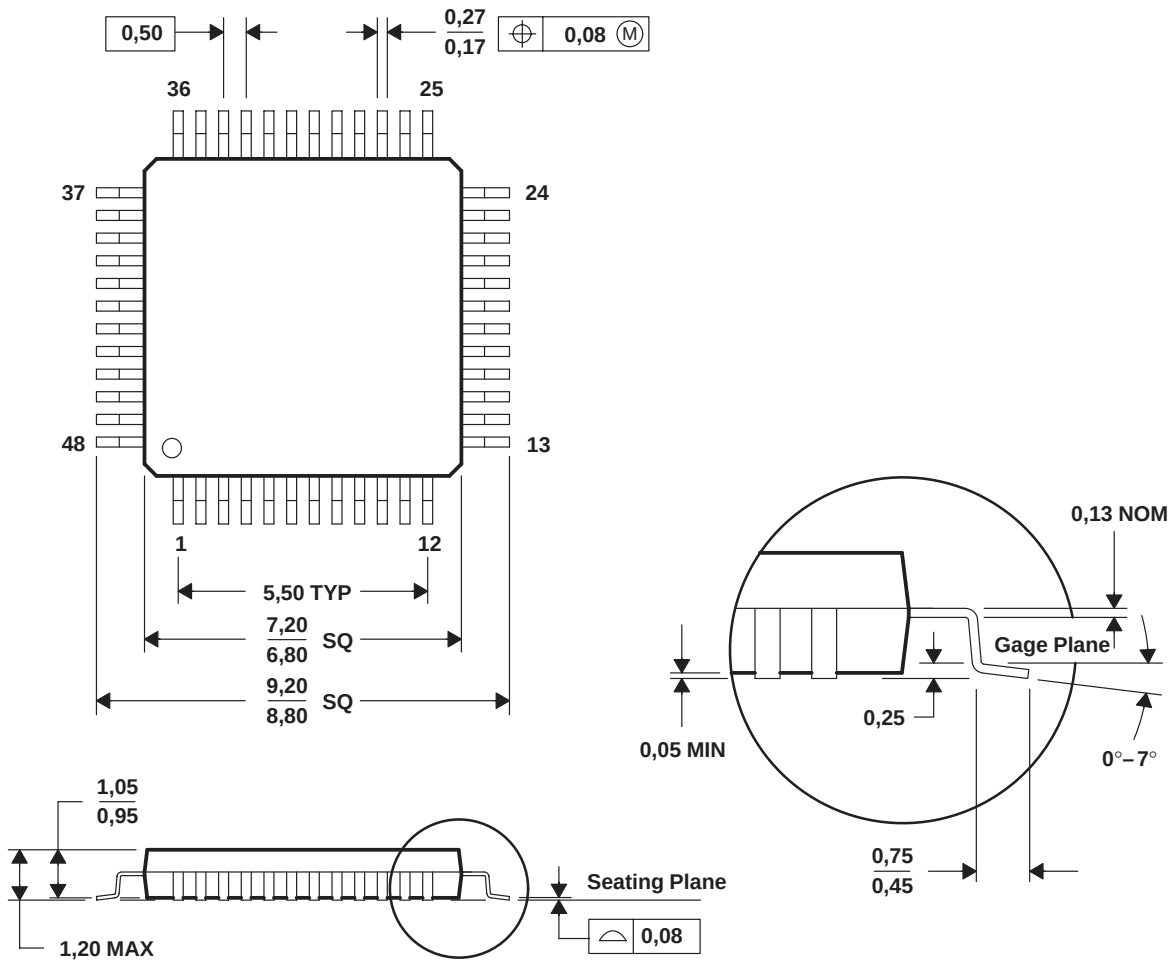

NOTES: A. All linear dimensions are in millimeters.
B. This drawing is subject to change without notice.
C. Falls within JEDEC MS-026

PFB (S–PQFP–G48)

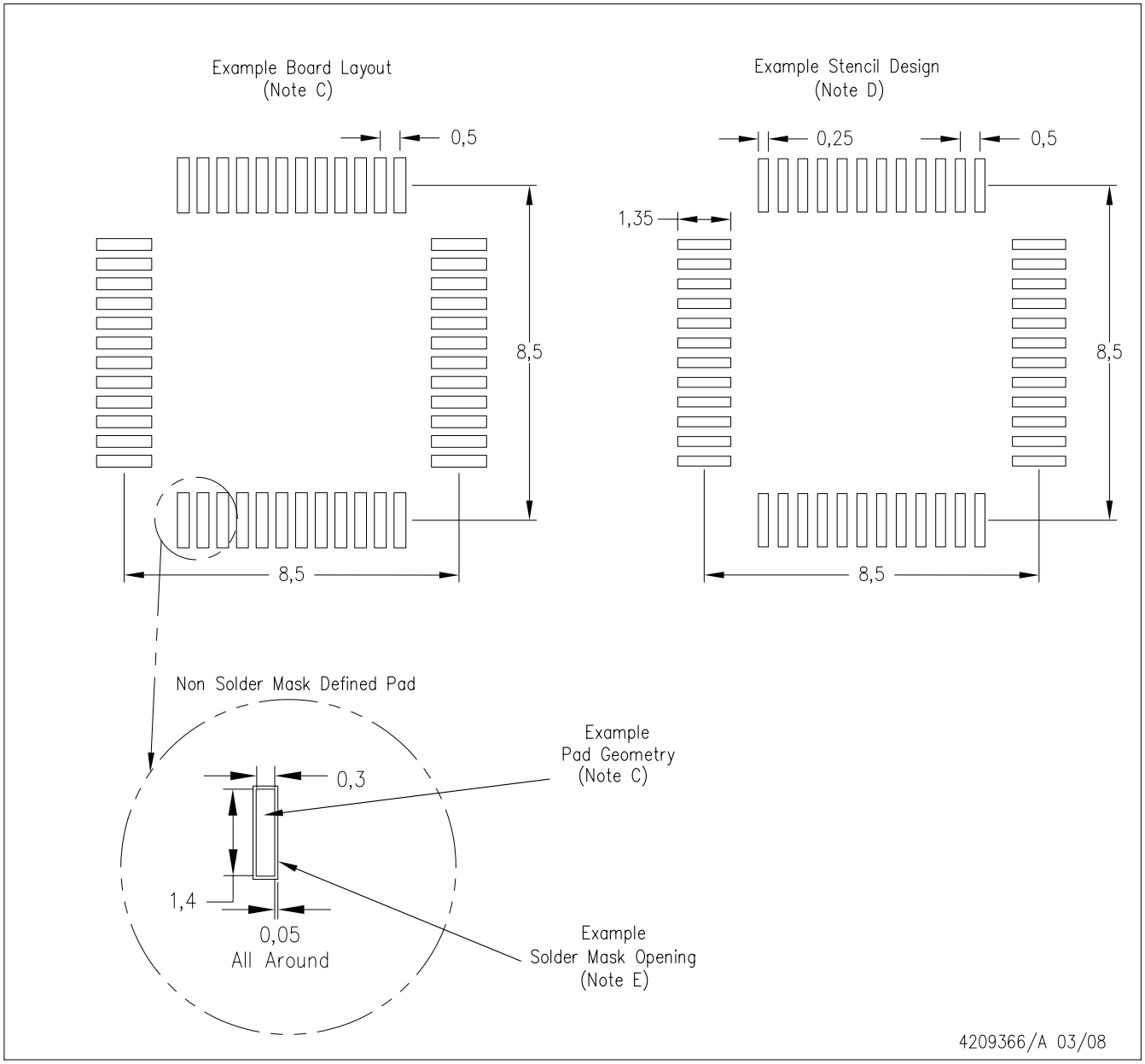

NOTES:
A. All linear dimensions are in millimeters.
B. This drawing is subject to change without notice.
C. Publication IPC–7351 is recommended for alternate designs.
D. Laser cutting apertures with trapezoidal walls and also rounding corners will offer better paste release. Customers should contact their board assembly site for stencil design recommendations. Refer to IPC–7525.
E. Customers should contact their board fabrication site for solder mask tolerances between and around signal pads.

IMPORTANT NOTICE AND DISCLAIMER

TI PROVIDES TECHNICAL AND RELIABILITY DATA (INCLUDING DATA SHEETS), DESIGN RESOURCES (INCLUDING REFERENCE DESIGNS), APPLICATION OR OTHER DESIGN ADVICE, WEB TOOLS, SAFETY INFORMATION, AND OTHER RESOURCES “AS IS” AND WITH ALL FAULTS, AND DISCLAIMS ALL WARRANTIES, EXPRESS AND IMPLIED, INCLUDING WITHOUT LIMITATION ANY IMPLIED WARRANTIES OF MERCHANTABILITY, FITNESS FOR A PARTICULAR PURPOSE OR NON-INFRINGEMENT OF THIRD PARTY INTELLECTUAL PROPERTY RIGHTS.

These resources are intended for skilled developers designing with TI products. You are solely responsible for (1) selecting the appropriate TI products for your application, (2) designing, validating and testing your application, and (3) ensuring your application meets applicable standards, and any other safety, security, regulatory or other requirements.

These resources are subject to change without notice. TI grants you permission to use these resources only for development of an application that uses the TI products described in the resource. Other reproduction and display of these resources is prohibited. No license is granted to any other TI intellectual property right or to any third party intellectual property right. TI disclaims responsibility for, and you will fully indemnify TI and its representatives against, any claims, damages, costs, losses, and liabilities arising out of your use of these resources.

TI’s products are provided subject to TI’s Terms of Sale or other applicable terms available either on ti.com or provided in conjunction with such TI products. TI’s provision of these resources does not expand or otherwise alter TI’s applicable warranties or warranty disclaimers for TI products.

TI objects to and rejects any additional or different terms you may have proposed.

Mailing Address: Texas Instruments, Post Office Box 655303, Dallas, Texas 75265
Copyright © 2022, Texas Instruments Incorporated