AM3517, AM3505 Sitara™ Processors

1 Device Summary

1.1 Features

- AM3517/05 Sitara Processor:
  - MPU Subsystem
    - 600-MHz Sitara ARM Cortex®-A8 Core
    - NEON™ SIMD Coprocessor and Vector Floating-Point (FP) Coprocessor
  - Memory Interfaces:
    - 166-MHz 16- and 32-Bit mDDR/DDR2 Interface with 1GB of Total Addressable Space
    - Up to 83 MHz General-Purpose Memory Interface Supporting 16-Bit-Wide Multiplexed Address/Data Bus
    - 64KB of SRAM
    - 3 Removable Media Interfaces [MMC/SD/SDIO]
  - IO Voltage:
    - mDDR/DDR2 IOs: 1.8V
    - Other IOs: 1.8V and 3.3V
  - Core Voltage: 1.2V
  - Commercial and Extended Temperature Grade (operating restrictions apply)
  - 16-Bit Video Input Port Capable of Capturing HD Video
  - HD Resolution Display Subsystem
  - Serial Communication
    - High-End CAN Controller
    - 10/100 Mbit Ethernet MAC
    - USB OTG Subsystem with Standard DP/DM Interface [HS/FS/LS]
    - Multiport USB Host Subsystem [HS/FS/LS]
      - 12-Pin ULPI or 6-, 4-, or 3-Pin Serial Interface
    - Four Master and Slave Multichannel Serial Port Interface (McSPI) Ports
    - Five Multichannel Buffered Serial Ports (McBSPs)
      - 512-Byte Transmit and Receive Buffer (McBSP1/3/4/5)
      - 5-KB Transmit and Receive Buffer (McBSP2)
      - SIDETONE Core Support (McBSP2 and McBSP3 Only) For Filter, Gain, and Mix Operations
      - 128-Channel Transmit and Receive Mode
      - Direct Interface to I2S and PCM Device and TDM Buses
    - HDQ/1-Wire Interface
    - 4 UARTs (One with Infrared Data Association [IrDA] and Consumer Infrared [CIR] Modes)
    - 3 Master and Slave High-Speed Inter-Integrated Circuit (I^2C) Controllers
    - Twelve 32-bit General-Purpose Timers
    - One 32-bit Watchdog Timer
    - One 32-bit 32-kHz Sync Timer
    - Up to 186 General-Purpose I/O (GPIO) Pins
- Display Subsystem
  - Parallel Digital Output
  - Up to 24-Bit RGB
  - Supports Up to 2 LCD Panels
  - Support for Remote Frame Buffer Interface (RFBI) LCD Panels
  - Two 10-Bit Digital-to-Analog Converters (DACs) Supporting
    - Composite NTSC/PAL Video
    - Luma/Chroma Separate Video (S-Video)
  - Rotation of 90, 180, and 270 Degrees
  - Resize Images From 1/4x to 8x
  - Color Space Converter
  - 8-Bit Alpha Blending
- Video Processing Front End (VPFE) 16-Bit Video Input Port
  - RAW Data Interface
  - 75-MHz Maximum Pixel Clock
  - Supports REC656/CCIR656 Standard
  - Supports YCbCr422 Format (8-Bit or 16-Bit with Discrete Horizontal and Vertical Sync Signals)
  - Generates Optical Black Clamping Signals
  - Built-in Digital Clamping and Black Level Compensation
  - 10-Bit to 8-Bit A-law Compression Hardware
  - Supports up to 16K Pixels (Image Size) in Horizontal and Vertical Directions
- System Direct Memory Access (sDMA) Controller (32 Logical Channels with Configurable Priority)
- Comprehensive Power, Reset, and Clock Management
- ARM Cortex-A8 Memory Architecture
  - ARMv7 Architecture
  - In-Order, Dual-Issue, Superscalar Microprocessor Core
  - ARM NEON Multimedia Architecture
  - Over 2x Performance of ARMv6 SIMD

An IMPORTANT NOTICE at the end of this data sheet addresses availability, warranty, changes, use in safety-critical applications, intellectual property matters and other important disclaimers. PRODUCTION DATA.

  - Supports Both Integer and Floating-Point SIMD
  - Jazelle® RCT Execution Environment Architecture
  - Dynamic Branch Prediction with Branch Target Address Cache, Global History Buffer and 8-Entry Return Stack
  - Embedded Trace Macrocell [ETM] Support for Noninvasive Debug
  - 16KB of Instruction Cache (4-Way Set-Associative)
  - 16KB of Data Cache (4-Way Set-Associative)
  - 256KB of L2 Cache
- PowerVR SGX™ Graphics Accelerator (AM3517 Only)
  - Tile-Based Architecture Delivering up to 10 MPoly/sec
  - Universal Scalable Shader Engine: Multi-threaded Engine Incorporating Pixel and Vertex Shader Functionality
  - Industry Standard API Support: OpenGLES 1.1 and 2.0, OpenVG1.0
  - Fine-Grained Task Switching, Load Balancing, and Power Management
  - Programmable, High-Quality Image Anti-Aliasing
- Endianess
  - ARM Instructions – Little Endian
  - ARM Data – Configurable
- SDRC Memory Controller
  - 16- and 32-Bit Memory Controller with 1GB of Total Address Space
  - Double Data Rate (DDR2) SDRAM, Mobile Double Data Rate (mDDR)SDRAM
  - SDRAM Memory Scheduler (SMS) and Rotation Engine
- General Purpose Memory Controller (GPMC)
  - 16-Bit-Wide Multiplexed Address/Data Bus
  - Up to 8 Chip-Select Pins with 128MB of Address Space per Chip-Select Pin
  - Glueless Interface to NOR Flash, NAND Flash (with ECC Hamming Code Calculation), SRAM and Pseudo-SRAM
  - Flexible Asynchronous Protocol Control for Interface to Custom Logic (FPGA, CPLD, ASICs, and so forth)
  - Nonmultiplexed Address/Data Mode (Limited 2-KB Address Space)
- Test Interfaces
  - IEEE-1149.1 (JTAG) Boundary-Scan Compatible
  - Embedded Trace Macro Interface (ETM)
- 65-nm CMOS Technology
- Packages:
  - 491-Pin BGA (17 x 17, 0.65-mm Pitch) [ZCN Suffix] with Via Channel™ Array Technology
  - 484-Pin PBGA (23 x 23, 1-mm Pitch) [ZER Suffix]

1.2 Applications

- Single-Board Computers
- Industrial and Home Automation
- Digital Signage
- Point of Service
- Portable Media Player
- Portable Industrial
- Transportation
- Navigation
- Smart White Goods
- Digital TV
- Digital Video Camera
- Gaming

Copyright © 2009–2014, Texas Instruments Incorporated

1.3 Description

AM3517/05 is a high-performance ARM Cortex-A8 microprocessor with speeds up to 600 MHz. The device offers 3D graphics acceleration while also supporting numerous peripherals, including DDR2, CAN, EMAC, and USB OTG PHY that are well suited for industrial apllications.

The processor can support other applications, including:

- Single-board computers
- Home and industrial automation
- Human machine Interface

The device supports high-level operating systems (OSs), such as:

- Linux®
- Windows® CE
- Android™

The following subsystems are part of the device:

- Microprocessor unit (MPU) subsystem based on the ARM Cortex-A8 microprocessor
- PowerVR SGX graphics accelerator (AM3517 device only) subsystem for 3D graphics acceleration to support display and gaming effects
- Display subsystem with several features for multiple concurrent image manipulation, and a programmable interface supporting a wide variety of displays. The display subsystem also supports NTSC/PAL video out.
- High-performance interconnects provide high-bandwidth data transfers for multiple initiators to the internal and external memory controllers and to on-chip peripherals. The device also offers a comprehensive clock-management scheme.

AM3517/05 devices are available in a 491-pin BGA package and a 484-pin PBGA package.

This AM3517/05 data manual presents the electrical and mechanical specifications for the AM3517/05 Sitara processor.

Device Information(1)

PART NUMBER	PACKAGE	BODY SIZE
AM3505	NFBGA (491)	17.10 mm x 17.10 mm
AM3505	BGA (484)	23.20 mm x 23.20 mm
AM3517	NFBGA (491)	17.10 mm x 17.10 mm
AM3517	BGA (484)	23.20 mm x 23.20 mm

(1) For more information, see Section 8, *Mechanical Packaging and Orderable Information*.

Copyright © 2009–2014, Texas Instruments Incorporated

1.4 Functional Block Diagram

Figure 1-1 shows the functional block diagram of the AM3517/05 Sitara ARM microprocessor.

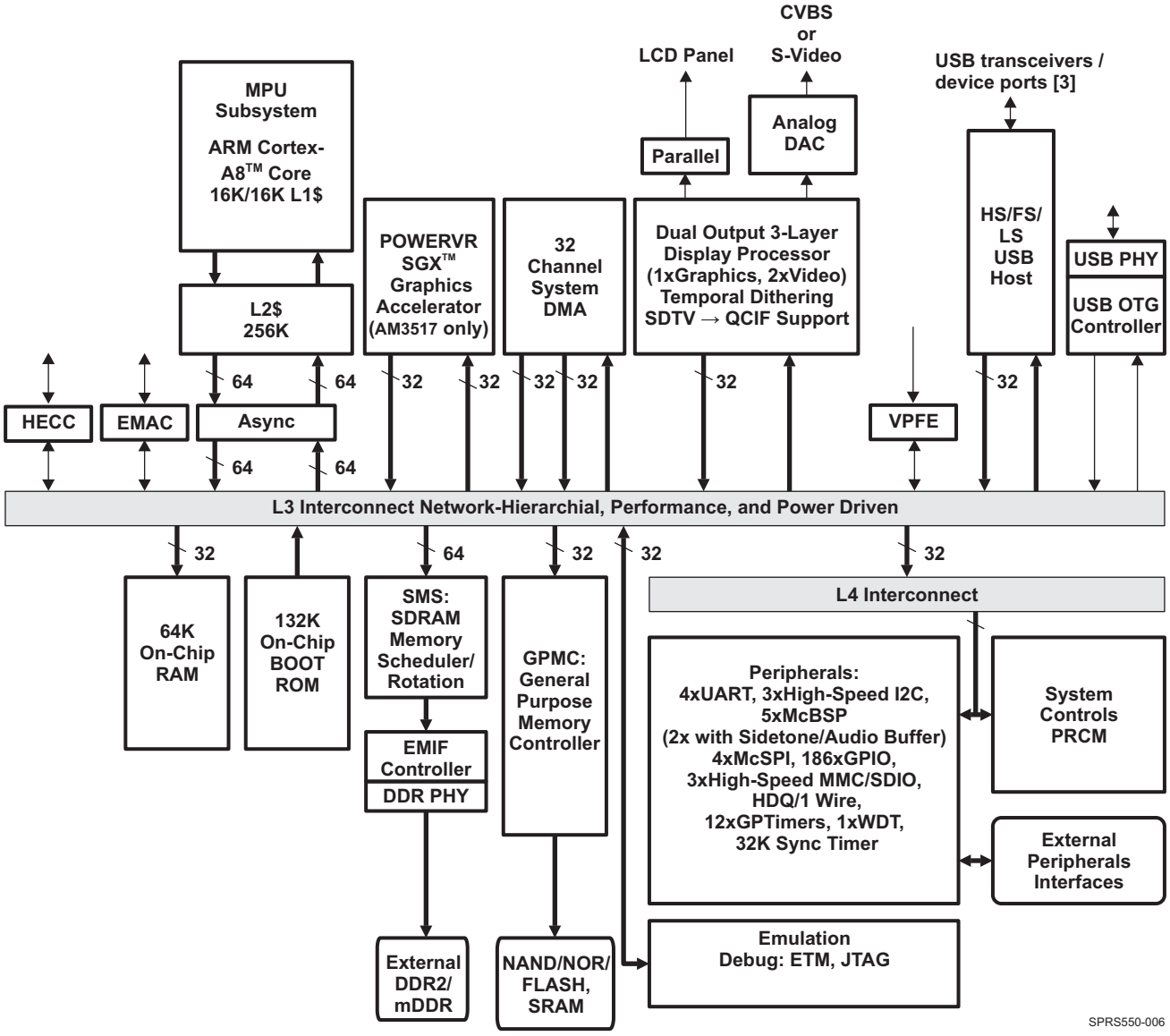

Figure 1-1. AM3517/05 Functional Block Diagram

Copyright © 2009–2014, Texas Instruments Incorporated

Table of Contents

1 Device Summary **1**
1.1 Features 1
1.2 Applications 2
1.3 Description 3
1.4 Functional Block Diagram 4
2 Revision History **6**
3 Device Comparison **7**
3.1 Device Features Comparison 7
3.2 ZCN and ZER Package Differences 7
4 Terminal Configuration and Functions **8**
4.1 Pin Assignments 8
4.2 Ball Characteristics 17
4.3 Multiplexing Characteristics 51
4.4 Signal Description 57
5 Specifications **80**
5.1 Absolute Maximum Ratings 80
5.2 Handling Ratings 81
5.3 Recommended Operating Conditions 82
5.4 Power Consumption Summary 84
5.5 Electrical Characteristics 85
5.6 Thermal Characteristics 86
5.7 Core Voltage Decoupling 88
5.8 Power-up and Power-down 90
5.9 Clock Specifications 92
5.10 Video DAC Specifications 100
6 Timing Requirements and Switching Characteristics **107**
6.1 Timing Test Conditions 107
6.2 Interface Clock Specifications 107
6.3 Timing Parameters 108
6.4 External Memory Interfaces 109
6.5 Video Interfaces 151
6.6 Serial Communications Interfaces 156
6.7 Removable Media Interfaces 197
6.8 Test Interfaces 211
7 Device and Documentation Support **215**
7.1 Device Support 215
7.2 Documentation Support 216
7.3 Related Links 217
7.4 Community Resources 217
7.5 Trademarks 217
7.6 Electrostatic Discharge Caution 217
8 Mechanical Packaging and Orderable Information **218**
8.1 Package Option Addendum 218

Copyright © 2009–2014, Texas Instruments Incorporated

2 Revision History

NOTE: Page numbers for previous revisions may differ from page numbers in the current version.

This data manual revision history table highlights the technical and major format changes made from Revision E to Revision F.

SEE	ADDITIONS/MODIFICATIONS/DELETIONS
	Description:
	Added Device Information table
Section 3	Device Comparison:
	Added Section 3, Device Comparison
	Added Section 3.1, Device Features Comparison
	Moved Section 3.2, ZCN and ZER Package Differences to Section 3, Device Comparison
Section 4	Terminal Configuration and Functions:
	Changed title from Terminal Description to Terminal Configuration and Functions
Section 4.4.9	Signal Description:
	Added pin N22 to VDDS row of the ZCN package in Table 4-27, Power Supplies Description.
Section 5	Specifications:
	Changed title from Electrical Characteristics to Specifications
	Extracted handling ratings from Table 5-1, Absolute Maximum Ratings Over Operating Junction Temperature Range and added Table 5-2, Handling Ratings
	Moved Section 5.9, Clock Specifications to Section 5, Specifications
	Moved Section 5.10, Video DAC Specifications toSection 5, Specifications
Section 5.4	Power Consumption Summary:
	Moved Table 5-4, Estimated Power Consumption at Ball Level to its own section.
Section 5.5	Electrical Characteristics:
	Changed title from DC Electrical Characteristics to Electrical Characteristics
Section 5.6	Thermal Characteristics:
	Changed title from Package Thermal Resistance to Thermal Characteristics
	Moved section from Package Characteristics to separate section
	Added θ_{JA}, θ_{JC}, θ_{JB} values to tables (Table 5-6 and Table 5-7) for ZCN and ZER package thermal resistance characteristics.
Section 7	Device and Documentation Support
	Changed title Package Characteristics to Device and Documentation Support
	Changed title Device and Development Support - Support Tool Nomenclature to Section 7.1.2, Device Nomenclature
	Added Section 7.1.1, Development Support
	Changed title Related Documentation From Texas Instruments to Section 7.2.1, Related Documentation
	Moved section Related Documentation to Section 7.2.1, Related Documentation
Section 8	Mechanical Packaging and Orderable Information
	Changed title Mechanical Data to Mechanical Packaging and Orderable Information

Copyright © 2009–2014, Texas Instruments Incorporated

3 Device Comparison

3.1 Device Features Comparison

Table 3-1. Device Features Comparison

FEATURE	AM3505	AM3517
PowerVR SGX Graphics Accelerator	No	Yes

3.2 ZCN and ZER Package Differences

Table 3-2 lists the ZER and ZCN package differences on the device.

Table 3-2. ZCN and ZER Package Differences

FEATURE	ZCN PACKAGE	ZER PACKAGE
Pin Assignments	For ZCN package pin assignments, see Section 4, *Terminal Configuration and Functions*	For ZER package pin assignments, see Section 4, *Terminal Configuration and Functions*
Video Interfaces	TV Out available	TV Out not available

Copyright © 2009–2014, Texas Instruments Incorporated

4 Terminal Configuration and Functions

4.1 Pin Assignments

4.1.1 Pin Map (Top View)

The following illustrations show the top views of the 484-pin [ZER] and 491-pin [ZCN] package pin assignments in four quadrants (A, B, C, and D).

Note: A pin with an NC designator indicates No Connection. For proper device operation, these pins must be left unconnected.

Copyright © 2009–2014, Texas Instruments Incorporated

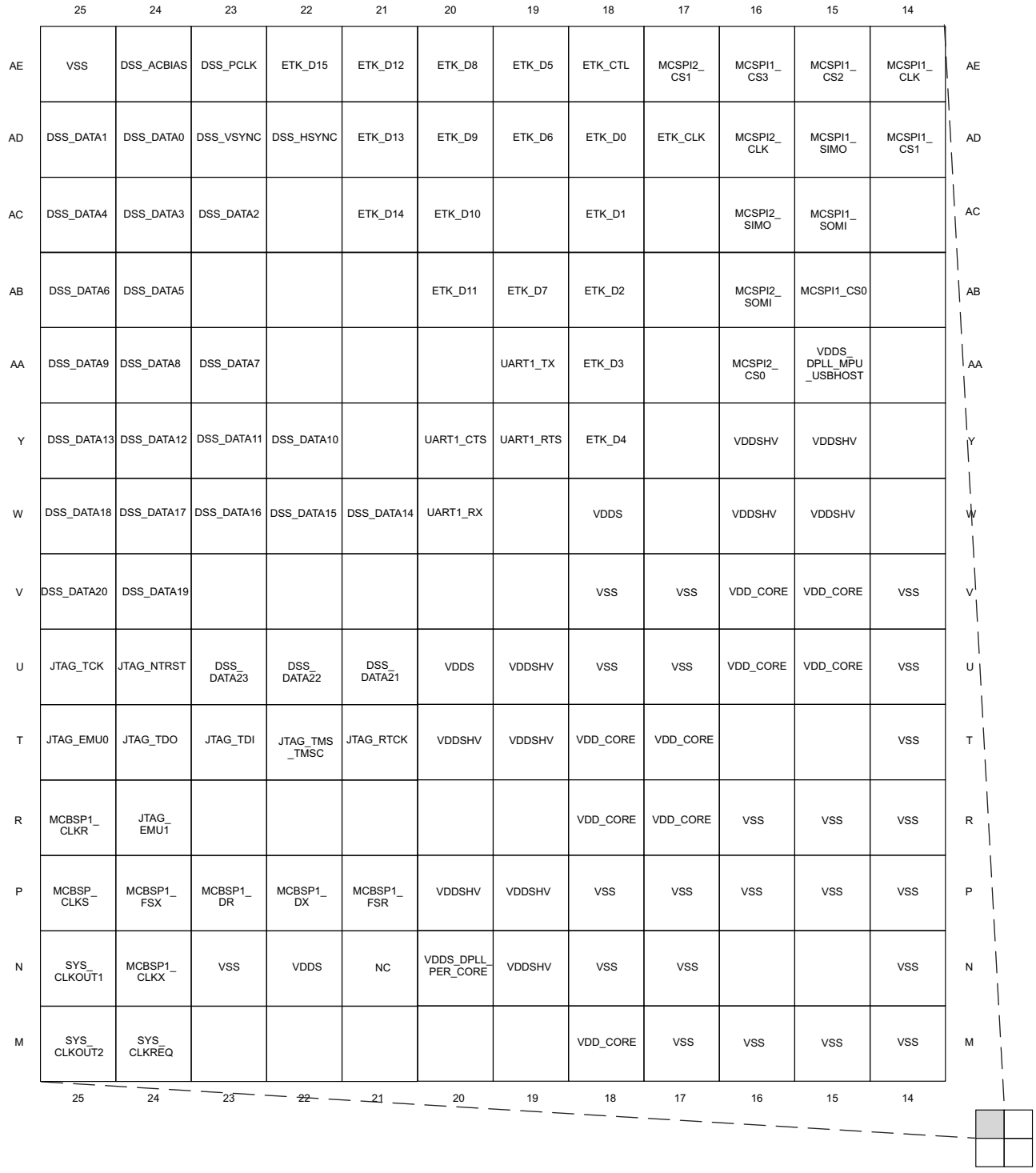

	25	24	23	22	21	20	19	18	17	16	15	14	
AE	VSS	DSS_ACBIAS	DSS_PCLK	ETK_D15	ETK_D12	ETK_D8	ETK_D5	ETK_CTL	MCSPI2_CS1	MCSPI1_CS3	MCSPI1_CS2	MCSPI1_CLK	AE
AD	DSS_DATA1	DSS_DATA0	DSS_VSYNC	DSS_HSYNC	ETK_D13	ETK_D9	ETK_D6	ETK_D0	ETK_CLK	MCSPI2_CLK	MCSPI1_SIMO	MCSPI1_CS1	AD
AC	DSS_DATA4	DSS_DATA3	DSS_DATA2		ETK_D14	ETK_D10		ETK_D1		MCSPI2_SIMO	MCSPI1_SOMI		AC
AB	DSS_DATA6	DSS_DATA5				ETK_D11	ETK_D7	ETK_D2		MCSPI2_SOMI	MCSPI1_CS0		AB
AA	DSS_DATA9	DSS_DATA8	DSS_DATA7				UART1_TX	ETK_D3		MCSPI2_CS0	VDDS_DPLL_MPU_USBHOST		AA
Y	DSS_DATA13	DSS_DATA12	DSS_DATA11	DSS_DATA10		UART1_CTS	UART1_RTS	ETK_D4		VDDSHV	VDDSHV		Y
W	DSS_DATA18	DSS_DATA17	DSS_DATA16	DSS_DATA15	DSS_DATA14	UART1_RX		VDDS		VDDSHV	VDDSHV		W
V	DSS_DATA20	DSS_DATA19						VSS	VSS	VDD_CORE	VDD_CORE	VSS	V
U	JTAG_TCK	JTAG_NTRST	DSS_DATA23	DSS_DATA22	DSS_DATA21	VDDS	VDDSHV	VSS	VSS	VDD_CORE	VDD_CORE	VSS	U
T	JTAG_EMU0	JTAG_TDO	JTAG_TDI	JTAG_TMS_TMSC	JTAG_RTCK	VDDSHV	VDDSHV	VDD_CORE	VDD_CORE			VSS	T
R	MCBSP1_CLKR	JTAG_EMU1						VDD_CORE	VDD_CORE	VSS	VSS	VSS	R
P	MCBSP_CLKS	MCBSP1_FSX	MCBSP1_DR	MCBSP1_DX	MCBSP1_FSR	VDDSHV	VDDSHV	VSS	VSS	VSS	VSS	VSS	P
N	SYS_CLKOUT1	MCBSP1_CLKX	VSS	VDDS	NC	VDDS_DPLL_PER_CORE	VDDSHV	VSS	VSS			VSS	N
M	SYS_CLKOUT2	SYS_CLKREQ						VDD_CORE	VSS	VSS	VSS	VSS	M
	25	24	23	22	21	20	19	18	17	16	15	14	

Figure 4-1. ZCN Pin Map [Quadrant A]

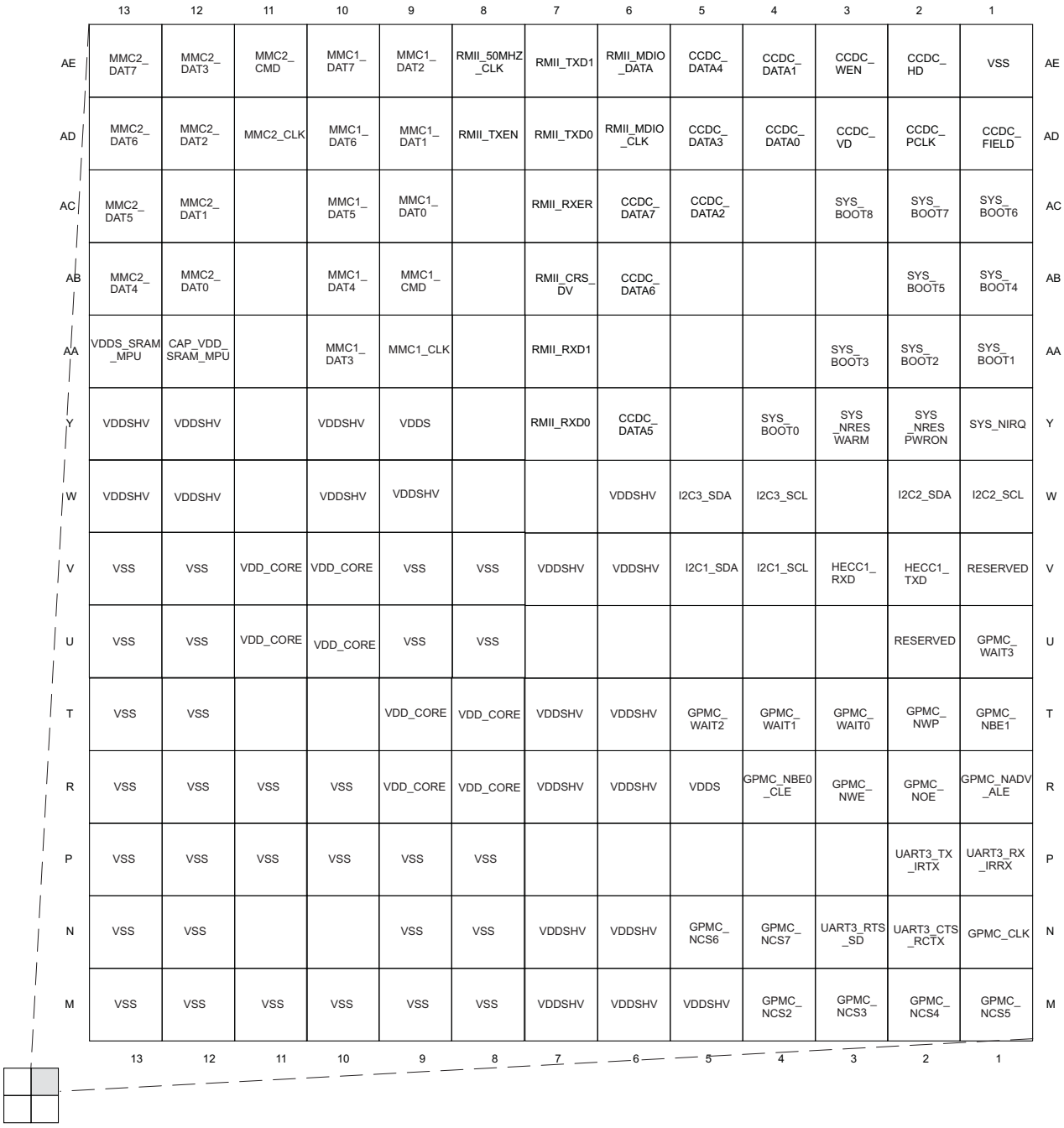

	13	12	11	10	9	8	7	6	5	4	3	2	1	
AE	MMC2_DAT7	MMC2_DAT3	MMC2_CMD	MMC1_DAT7	MMC1_DAT2	RMII_50MHZ_CLK	RMII_TXD1	RMII_MDIO_DATA	CCDC_DATA4	CCDC_DATA1	CCDC_WEN	CCDC_HD	VSS	AE
AD	MMC2_DAT6	MMC2_DAT2	MMC2_CLK	MMC1_DAT6	MMC1_DAT1	RMII_TXEN	RMII_TXD0	RMII_MDIO_CLK	CCDC_DATA3	CCDC_DATA0	CCDC_VD	CCDC_PCLK	CCDC_FIELD	AD
AC	MMC2_DAT5	MMC2_DAT1		MMC1_DAT5	MMC1_DAT0		RMII_RXER	CCDC_DATA7	CCDC_DATA2		SYS_BOOT8	SYS_BOOT7	SYS_BOOT6	AC
AB	MMC2_DAT4	MMC2_DAT0		MMC1_DAT4	MMC1_CMD		RMII_CRS_DV	CCDC_DATA6				SYS_BOOT5	SYS_BOOT4	AB
AA	VDDS_SRAM_MPU	CAP_VDD_SRAM_MPU		MMC1_DAT3	MMC1_CLK		RMII_RXD1				SYS_BOOT3	SYS_BOOT2	SYS_BOOT1	AA
Y	VDDSHV	VDDSHV		VDDSHV	VDDS		RMII_RXD0	CCDC_DATA5		SYS_BOOT0	SYS_NRESWARM	SYS_NRESPWRON	SYS_NIRQ	Y
W	VDDSHV	VDDSHV		VDDSHV	VDDSHV			VDDSHV	I2C3_SDA	I2C3_SCL		I2C2_SDA	I2C2_SCL	W
V	VSS	VSS	VDD_CORE	VDD_CORE	VSS	VSS	VDDSHV	VDDSHV	I2C1_SDA	I2C1_SCL	HECC1_RXD	HECC1_TXD	RESERVED	V
U	VSS	VSS	VDD_CORE	VDD_CORE	VSS	VSS						RESERVED	GPMC_WAIT3	U
T	VSS	VSS			VDD_CORE	VDD_CORE	VDDSHV	VDDSHV	GPMC_WAIT2	GPMC_WAIT1	GPMC_WAIT0	GPMC_NWP	GPMC_NBE1	T
R	VSS	VSS	VSS	VSS	VDD_CORE	VDD_CORE	VDDSHV	VDDSHV	VDDS	GPMC_NBE0_CLE	GPMC_NWE	GPMC_NOE	GPMC_NADV_ALE	R
P	VSS	VSS	VSS	VSS	VSS	VSS						UART3_TX_IRTX	UART3_RX_IRRX	P
N	VSS	VSS			VSS	VSS	VDDSHV	VDDSHV	GPMC_NCS6	GPMC_NCS7	UART3_RTS_SD	UART3_CTS_RCTX	GPMC_CLK	N
M	VSS	VSS	VSS	VSS	VSS	VSS	VDDSHV	VDDSHV	VDDSHV	GPMC_NCS2	GPMC_NCS3	GPMC_NCS4	GPMC_NCS5	M
	13	12	11	10	9	8	7	6	5	4	3	2	1	

Figure 4-2. ZCN Pin Map [Quadrant B]

Copyright © 2009–2014, Texas Instruments Incorporated

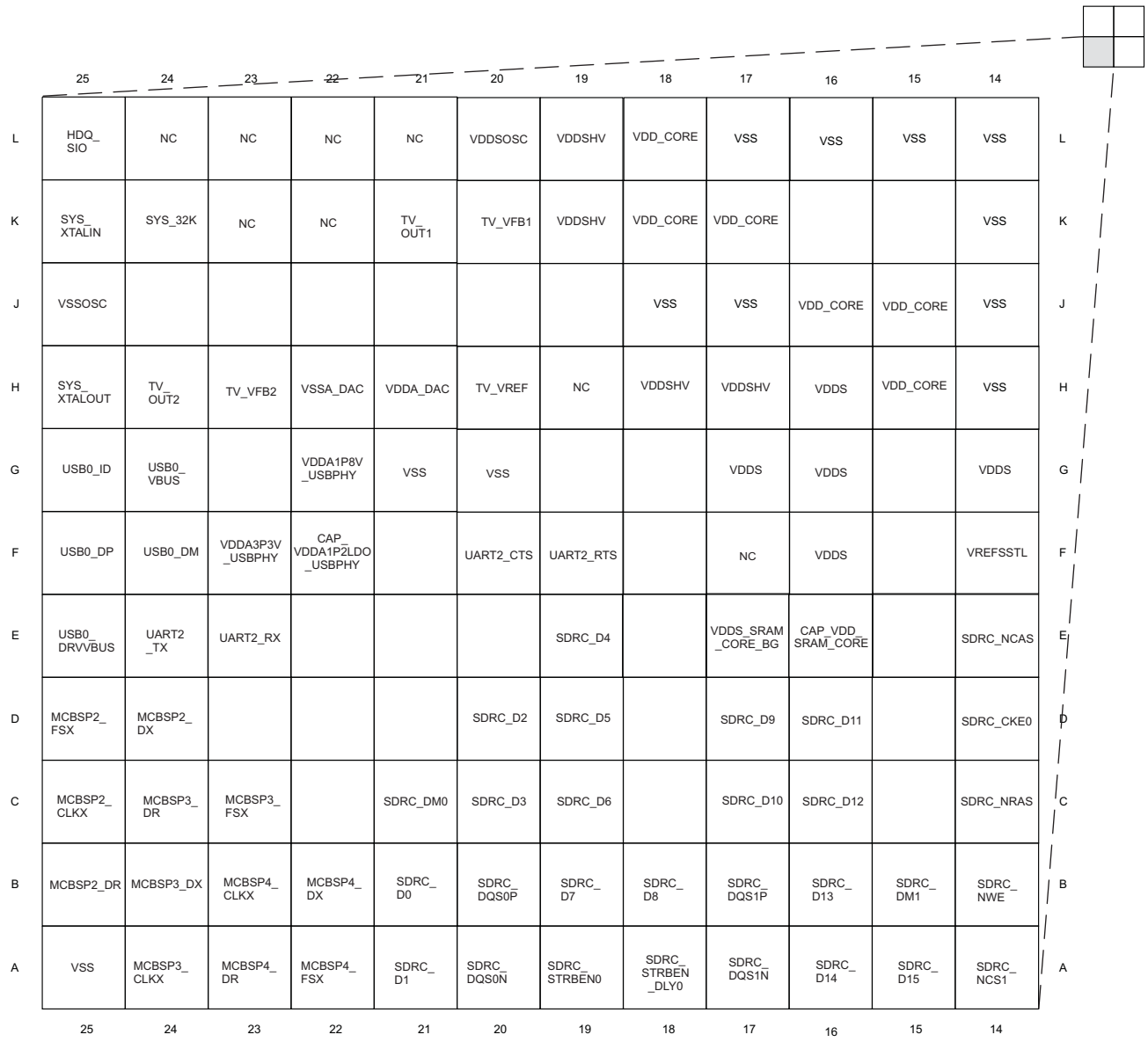

	25	24	23	22	21	20	19	18	17	16	15	14	
L	HDQ_ SIO	NC	NC	NC	NC	VDDSOSC	VDDSHV	VDD_CORE	VSS	VSS	VSS	VSS	L
K	SYS_ XTALIN	SYS_32K	NC	NC	TV_ OUT1	TV_VFB1	VDDSHV	VDD_CORE	VDD_CORE			VSS	K
J	VSSOSC							VSS	VSS	VDD_CORE	VDD_CORE	VSS	J
H	SYS_ XTALOUT	TV_ OUT2	TV_VFB2	VSSA_DAC	VDDA_DAC	TV_VREF	NC	VDDSHV	VDDSHV	VDDS	VDD_CORE	VSS	H
G	USB0_ID	USB0_ VBUS		VDDA1P8V _USBPHY	VSS	VSS			VDDS	VDDS		VDDS	G
F	USB0_DP	USB0_DM	VDDA3P3V _USBPHY	CAP_ VDDA1P2LDO _USBPHY		UART2_CTS	UART2_RTS		NC	VDDS		VREFSSTL	F
E	USB0_ DRVVBUS	UART2 _TX	UART2_RX				SDRC_D4		VDDS_SRAM _CORE_BG	CAP_VDD_ SRAM_CORE		SDRC_NCAS	E
D	MCBSP2_ FSX	MCBSP2_ DX				SDRC_D2	SDRC_D5		SDRC_D9	SDRC_D11		SDRC_CKE0	D
C	MCBSP2_ CLKX	MCBSP3_ DR	MCBSP3_ FSX		SDRC_DM0	SDRC_D3	SDRC_D6		SDRC_D10	SDRC_D12		SDRC_NRAS	C
B	MCBSP2_DR	MCBSP3_DX	MCBSP4_ CLKX	MCBSP4_ DX	SDRC_ D0	SDRC_ DQS0P	SDRC_ D7	SDRC_ D8	SDRC_ DQS1P	SDRC_ D13	SDRC_ DM1	SDRC_ NWE	B
A	VSS	MCBSP3_ CLKX	MCBSP4_ DR	MCBSP4_ FSX	SDRC_ D1	SDRC_ DQS0N	SDRC_ STRBEN0	SDRC_ STRBEN _DLY0	SDRC_ DQS1N	SDRC_ D14	SDRC_ D15	SDRC_ NCS1	A
	25	24	23	22	21	20	19	18	17	16	15	14	

Figure 4-3. ZCN Pin Map [Quadrant C]

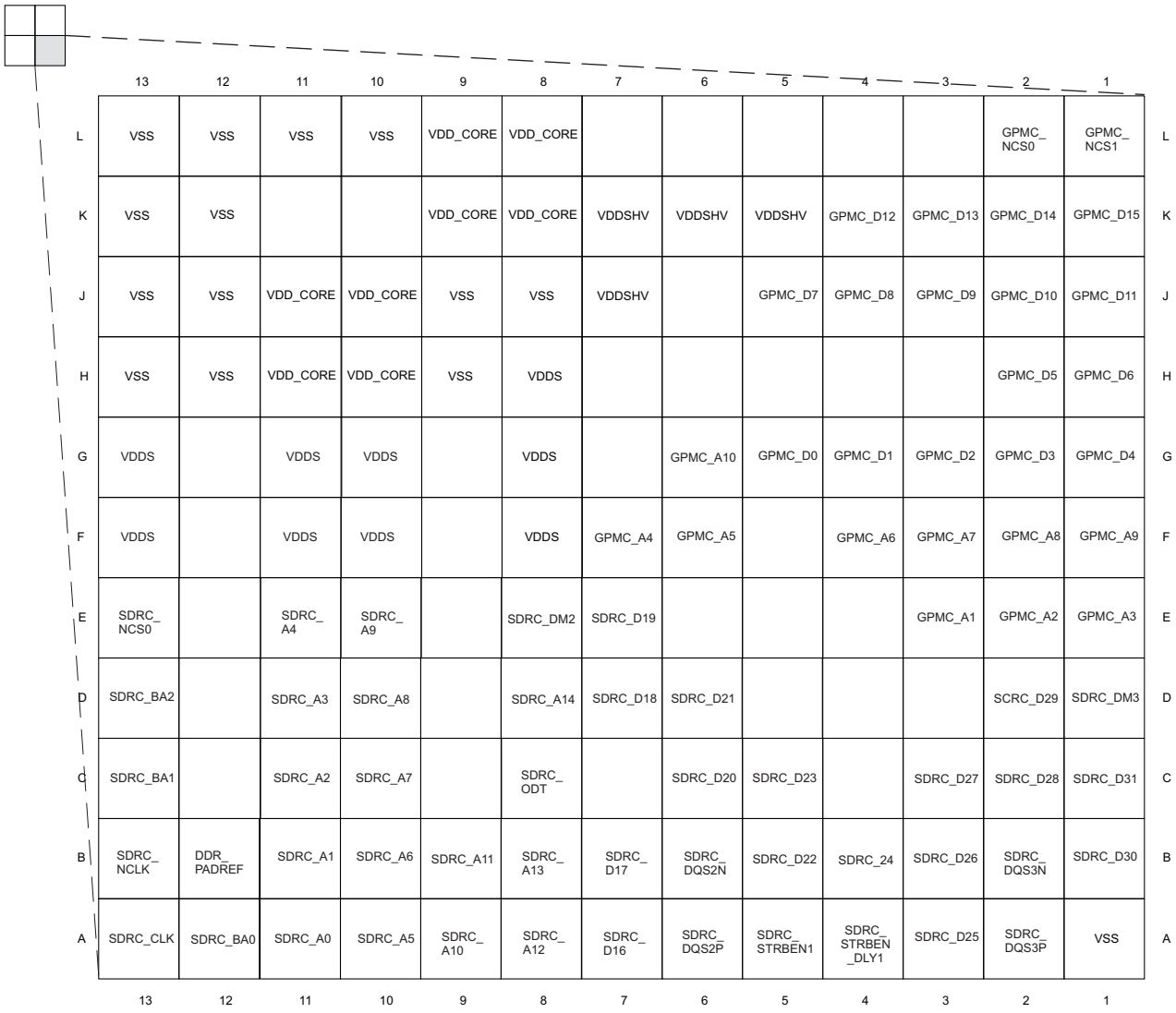

	13	12	11	10	9	8	7	6	5	4	3	2	1	
L	VSS	VSS	VSS	VSS	VDD_CORE	VDD_CORE						GPMC_ NCS0	GPMC_ NCS1	L
K	VSS	VSS			VDD_CORE	VDD_CORE	VDDSHV	VDDSHV	VDDSHV	GPMC_D12	GPMC_D13	GPMC_D14	GPMC_D15	K
J	VSS	VSS	VDD_CORE	VDD_CORE	VSS	VSS	VDDSHV		GPMC_D7	GPMC_D8	GPMC_D9	GPMC_D10	GPMC_D11	J
H	VSS	VSS	VDD_CORE	VDD_CORE	VSS	VDDS						GPMC_D5	GPMC_D6	H
G	VDDS		VDDS	VDDS		VDDS		GPMC_A10	GPMC_D0	GPMC_D1	GPMC_D2	GPMC_D3	GPMC_D4	G
F	VDDS		VDDS	VDDS		VDDS	GPMC_A4	GPMC_A5		GPMC_A6	GPMC_A7	GPMC_A8	GPMC_A9	F
E	SDRC_ NCS0		SDRC_ A4	SDRC_ A9		SDRC_DM2	SDRC_D19				GPMC_A1	GPMC_A2	GPMC_A3	E
D	SDRC_BA2		SDRC_A3	SDRC_A8		SDRC_A14	SDRC_D18	SDRC_D21				SCRC_D29	SDRC_DM3	D
C	SDRC_BA1		SDRC_A2	SDRC_A7		SDRC_ ODT		SDRC_D20	SDRC_D23		SDRC_D27	SDRC_D28	SDRC_D31	C
B	SDRC_ NCLK	DDR_ PADREF	SDRC_A1	SDRC_A6	SDRC_A11	SDRC_ A13	SDRC_ D17	SDRC_ DQS2N	SDRC_D22	SDRC_24	SDRC_D26	SDRC_ DQS3N	SDRC_D30	B
A	SDRC_CLK	SDRC_BA0	SDRC_A0	SDRC_A5	SDRC_ A10	SDRC_ A12	SDRC_ D16	SDRC_ DQS2P	SDRC_ STRBEN1	SDRC_ STRBEN _DLY1	SDRC_D25	SDRC_ DQS3P	VSS	A
	13	12	11	10	9	8	7	6	5	4	3	2	1	

Figure 4-4. ZCN Pin Map [Quadrant D]

Copyright © 2009–2014, Texas Instruments Incorporated



	A	B	C	D	E	F	G	H	J	K	L	
22	VSS	DSS_PCLK	UART1_TX	ETK_D8	ETK_D10	ETK_D1	ETK_CLK	MCSPI2_SOMI	MCSPI2_CLK	MCSPI1_CLK	VDDSHV	22
21	VDDSHV	DSS_HSYNC	UART1_RTS	ETK_D9	ETK_D7	ETK_D5	ETK_CTL	MCSPI2_CS0	MCSPI1_CS3	MMC2_DAT3	MMC2_DAT6	21
20	DSS_DATA0	DSS_VSYNC	UART1_RX	ETK_D13	ETK_D11	ETK_D2	ETK_D0	MCSPI2_SIMO	MCSPI1_CS1	MMC2_DAT0	MMC2_DAT5	20
19	DSS_DATA1	DSS_ACBIAS	UART1_CTS	ETK_D14	ETK_D4	ETK_D6	ETK_D3	MCSPI2_CS1	MCSPI1_CS2	MCSPI1_SIMO	MMC2_DAT1	19
18	DSS_DATA2	DSS_DATA3	DSS_DATA5	ETK_D15	ETK_D12	VDDSHV	VSS	VDDSHV	MCSPI1_SOMI	MCSPI1_CS0	MMC2_DAT4	18
17	DSS_DATA4	DSS_DATA8	DSS_DATA9	DSS_DATA6	VDDSHV	VSS	VDDSHV	VSS	VDDSHV	VDDS_DPLL_MPU_USBHOST	VDDS_SRAM_MPU	17
16	DSS_DATA13	DSS_DATA7	DSS_DATA10	DSS_DATA11	VSS	VDDS	VSS	VSS	VDD_CORE	VSS	VDDS	16
15	DSS_DATA16	DSS_DATA15	DSS_DATA19	DSS_DATA14	VDDSHV	VSS	VDDS	VSS	VSS	VDD_CORE	VSS	15
14	DSS_DATA17	DSS_DATA23	DSS_DATA22	DSS_DATA12	JTAG_TCK	VDDSHV	VSS	VSS	VDD_CORE	VSS	VDD_CORE	14
13	DSS_DATA20	DSS_DATA21	DSS_DATA18	JTAG_NTRST	JTAG_EMU0	VSS	VDDSHV	VSS	VSS	VDD_CORE	VSS	13
12	JTAG_TMS_TMSC	JTAG_TDI	JTAG_RTCK	JTAG_TDO	JTAG_EMU1	VDDSHV	VDDSHV	VSS	VDD_CORE	VSS	VDD_CORE	12
	A	B	C	D	E	F	G	H	J	K	L	

Figure 4-5. ZER Pin Map [Quadrant A]

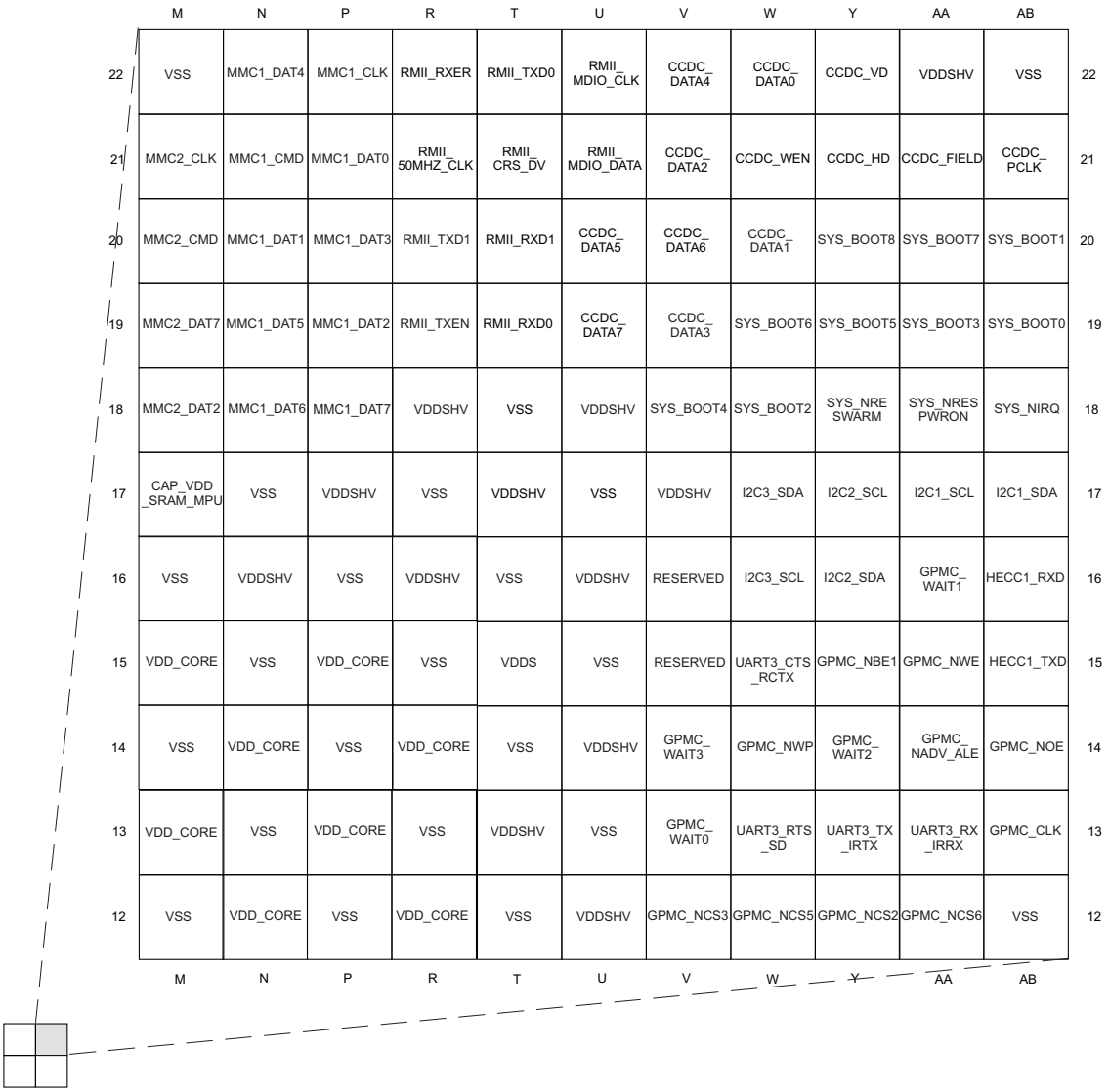

	M	N	P	R	T	U	V	W	Y	AA	AB	
22	VSS	MMC1_DAT4	MMC1_CLK	RMII_RXER	RMII_TXD0	RMII_MDIO_CLK	CCDC_DATA4	CCDC_DATA0	CCDC_VD	VDDSHV	VSS	22
21	MMC2_CLK	MMC1_CMD	MMC1_DAT0	RMII_50MHZ_CLK	RMII_CRS_DV	RMII_MDIO_DATA	CCDC_DATA2	CCDC_WEN	CCDC_HD	CCDC_FIELD	CCDC_PCLK	21
20	MMC2_CMD	MMC1_DAT1	MMC1_DAT3	RMII_TXD1	RMII_RXD1	CCDC_DATA5	CCDC_DATA6	CCDC_DATA1	SYS_BOOT8	SYS_BOOT7	SYS_BOOT1	20
19	MMC2_DAT7	MMC1_DAT5	MMC1_DAT2	RMII_TXEN	RMII_RXD0	CCDC_DATA7	CCDC_DATA3	SYS_BOOT6	SYS_BOOT5	SYS_BOOT3	SYS_BOOT0	19
18	MMC2_DAT2	MMC1_DAT6	MMC1_DAT7	VDDSHV	VSS	VDDSHV	SYS_BOOT4	SYS_BOOT2	SYS_NRESWARM	SYS_NRESPWRON	SYS_NIRQ	18
17	CAP_VDD_SRAM_MPU	VSS	VDDSHV	VSS	VDDSHV	VSS	VDDSHV	I2C3_SDA	I2C2_SCL	I2C1_SCL	I2C1_SDA	17
16	VSS	VDDSHV	VSS	VDDSHV	VSS	VDDSHV	RESERVED	I2C3_SCL	I2C2_SDA	GPMC_WAIT1	HECC1_RXD	16
15	VDD_CORE	VSS	VDD_CORE	VSS	VDDS	VSS	RESERVED	UART3_CTS_RCTX	GPMC_NBE1	GPMC_NWE	HECC1_TXD	15
14	VSS	VDD_CORE	VSS	VDD_CORE	VSS	VDDSHV	GPMC_WAIT3	GPMC_NWP	GPMC_WAIT2	GPMC_NADV_ALE	GPMC_NOE	14
13	VDD_CORE	VSS	VDD_CORE	VSS	VDDSHV	VSS	GPMC_WAIT0	UART3_RTS_SD	UART3_TX_IRTX	UART3_RX_IRRX	GPMC_CLK	13
12	VSS	VDD_CORE	VSS	VDD_CORE	VSS	VDDSHV	GPMC_NCS3	GPMC_NCS5	GPMC_NCS2	GPMC_NCS6	VSS	12
	M	N	P	R	T	U	V	W	Y	AA	AB	

Figure 4-6. ZER Pin Map [Quadrant B]

Copyright © 2009–2014, Texas Instruments Incorporated



	A	B	C	D	E	F	G	H	J	K	L	
11	VSS	MCBSP1_CLKR	MCBSP1_FSX	MCBSP1_FSR	MCBSP_CLKS	VDDS_DPLL_PER_CORE	VSS	VSS	VSS	VDD_CORE	VSS	11
10	SYS_XTALIN	VSSOSC	MCBSP1_DX	NC	SYS_CLKOUT2	NC	VDDSHV	VSS	VDD_CORE	VSS	VDD_CORE	10
9	SYS_XTALOUT	HDQ_SIO	MCBSP1_DR	NC	SYS_CLKOUT1	NC	VDDSOSC	VSS	VSS	VDD_CORE	VSS	9
8	SYS_32K	SYS_CLKREQ	MCBSP1_CLKX	NC	NC	NC	VDDSHV	VSS	VDD_CORE	VSS	VDD_CORE	8
7	USB0_DRVVBUS	USB0_ID	USB0_VBUS	VDDA1P8V_USBPHY	CAP_VDDA1P2LDO_USBPHY	VDDA3P3V_USBPHY	VSS	VSS	NC	VDDS	VSS	7
6	USB0_DP	USB0_DM	UART2_RX	UART2_TX	VSS	VSS	NC	VSS	VDDS_SRAM_CORE_BG	CAP_VDD_SRAM_CORE	VDDS	6
5	UART2_CTS	UART2_RTS	MCBSP2_DR	MCBSP2_CLKX	MCBSP2_FSX	VDDS	VSS	VDDS	SDRC_BA2	SDRC_BA1	VREFSSTL	5
4	MCBSP3_FSX	MCBSP3_DR	MCBSP3_DX	MCBSP3_CLKX	MCBSP2_DX	SDRC_DM0	SDRC_D11	SDRC_D12	SDRC_NCS0	SDRC_NCS1	SDRC_BA0	4
3	MCBSP4_CLKX	MCBSP4_DR	SDRC_D2	SDRC_D1	SDRC_D0	SDRC_D4	SDRC_D9	SDRC_D10	SDRC_D14	SDRC_CKE0	SDRC_NCAS	3
2	MCBSP4_DX	MCBSP4_FSX	SDRC_D3	SDRC_D5	SDRC_DQS0P	SDRC_STRBEN0	SDRC_D8	SDRC_DQS1P	SDRC_DM1	SDRC_NWE	SDRC_NCLK	2
1	VSS	VDDSHV	SDRC_D6	SDRC_D7	SDRC_DQS0N	SDRC_STRBEN_DLY0	SDRC_D13	SDRC_DQS1N	SDRC_D15	SDRC_NRAS	SDRC_CLK	1
	A	B	C	D	E	F	G	H	J	K	L	

Figure 4-7. ZER Pin Map [Quadrant C]

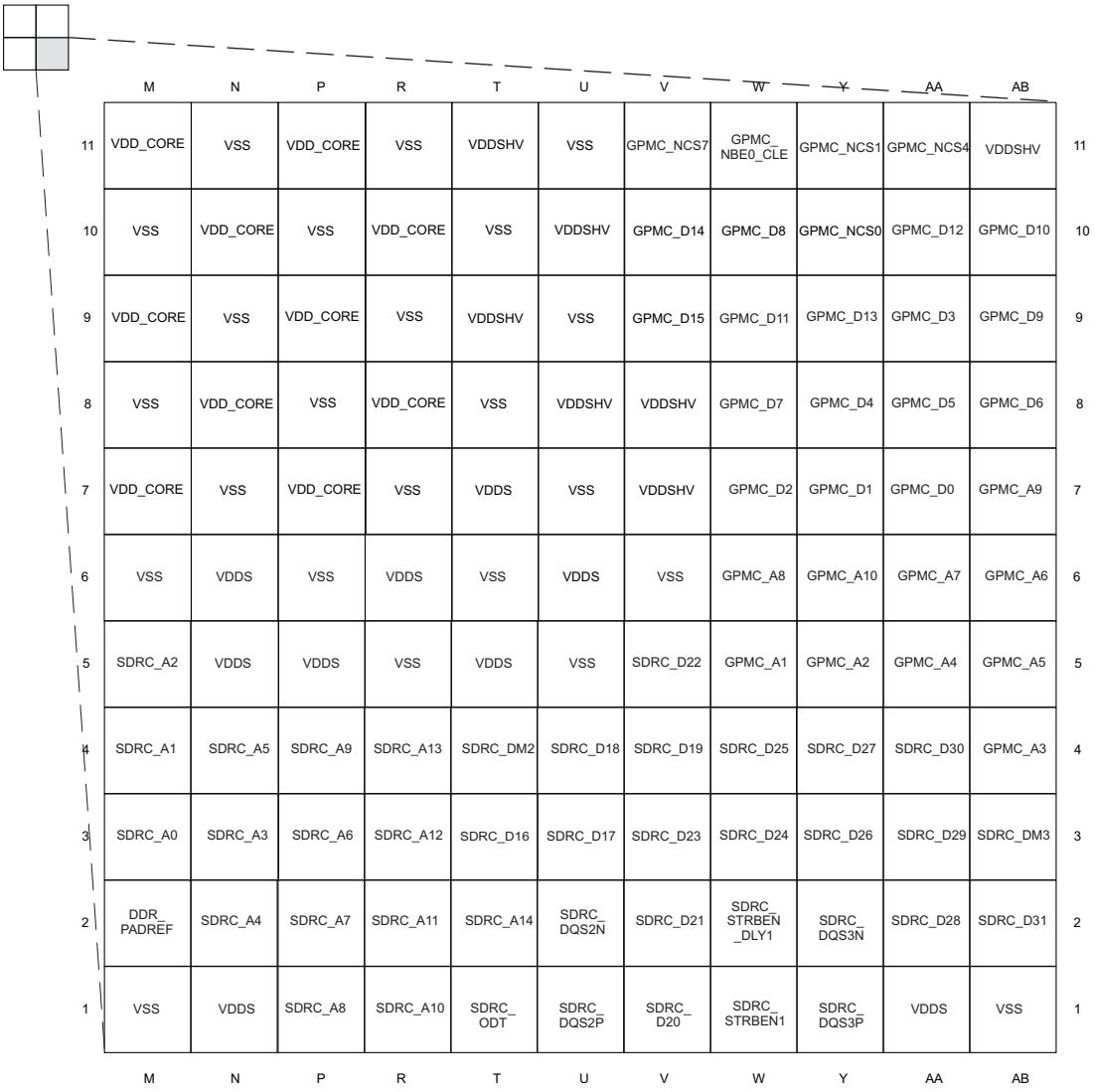

	M	N	P	R	T	U	V	W	Y	AA	AB	
11	VDD_CORE	VSS	VDD_CORE	VSS	VDDSHV	VSS	GPMC_NCS7	GPMC_NBE0_CLE	GPMC_NCS1	GPMC_NCS4	VDDSHV	11
10	VSS	VDD_CORE	VSS	VDD_CORE	VSS	VDDSHV	GPMC_D14	GPMC_D8	GPMC_NCS0	GPMC_D12	GPMC_D10	10
9	VDD_CORE	VSS	VDD_CORE	VSS	VDDSHV	VSS	GPMC_D15	GPMC_D11	GPMC_D13	GPMC_D3	GPMC_D9	9
8	VSS	VDD_CORE	VSS	VDD_CORE	VSS	VDDSHV	VDDSHV	GPMC_D7	GPMC_D4	GPMC_D5	GPMC_D6	8
7	VDD_CORE	VSS	VDD_CORE	VSS	VDDS	VSS	VDDSHV	GPMC_D2	GPMC_D1	GPMC_D0	GPMC_A9	7
6	VSS	VDDS	VSS	VDDS	VSS	VDDS	VSS	GPMC_A8	GPMC_A10	GPMC_A7	GPMC_A6	6
5	SDRC_A2	VDDS	VDDS	VSS	VDDS	VSS	SDRC_D22	GPMC_A1	GPMC_A2	GPMC_A4	GPMC_A5	5
4	SDRC_A1	SDRC_A5	SDRC_A9	SDRC_A13	SDRC_DM2	SDRC_D18	SDRC_D19	SDRC_D25	SDRC_D27	SDRC_D30	GPMC_A3	4
3	SDRC_A0	SDRC_A3	SDRC_A6	SDRC_A12	SDRC_D16	SDRC_D17	SDRC_D23	SDRC_D24	SDRC_D26	SDRC_D29	SDRC_DM3	3
2	DDR_PADREF	SDRC_A4	SDRC_A7	SDRC_A11	SDRC_A14	SDRC_DQS2N	SDRC_D21	SDRC_STRBEN_DLY1	SDRC_DQS3N	SDRC_D28	SDRC_D31	2
1	VSS	VDDS	SDRC_A8	SDRC_A10	SDRC_ODT	SDRC_DQS2P	SDRC_D20	SDRC_STRBEN1	SDRC_DQS3P	VDDS	VSS	1
	M	N	P	R	T	U	V	W	Y	AA	AB	

Figure 4-8. ZER Pin Map [Quadrant D]

Copyright © 2009–2014, Texas Instruments Incorporated

4.2 Ball Characteristics

Table 4-1 and Table 4-2 describe the terminal characteristics and the signals multiplexed on each pin for the ZCN/ZER packages. The following list describes the table column headers.

1. **BALL LOCATION:** Ball number(s) on the bottom side associated with each signal(s) on the bottom.
2. **PIN NAME:** Names of signals multiplexed on each ball (also notice that the name of the pin is the signal name in mode 0).
   Note: The *Ball Characteristics* table does not take into account subsystem pin multiplexing options. Subsystem pin multiplexing options are described in Section 4.4, *Signal Description.*
3. **MODE:** Multiplexing mode number.
   (a) Mode 0 is the primary mode; this means that when mode 0 is set, the function mapped on the pin corresponds to the name of the pin. There is always a function mapped on the primary mode. Notice that primary mode is not necessarily the default mode.

   Note: The default mode is the mode which is automatically configured on release of the internal GLOBAL_PWRON reset; also see the RESET REL. MODE column.
   (b) Modes 1 to 7 are possible modes for alternate functions. On each pin, some modes are effectively used for alternate functions, while some modes are not used and do not correspond to a functional configuration.
4. **TYPE:** Signal direction
   - I = Input
   - O = Output
   - I/O = Input/Output
   - D = Open drain
   - DS = Differential
   - A = Analog

   Note: In the safe_mode, the buffer is configured in high-impedance.
5. **BALL RESET STATE:** The state of the terminal at reset (power up).
   - 0: The buffer drives V_{OL} (pulldown/pullup resistor not activated)
     0(PD): The buffer drives V_{OL} with an active pulldown resistor.
   - 1: The buffer drives V_{OH} (pulldown/pullup resistor not activated)
     1(PU): The buffer drives V_{OH} with an active pullup resistor.
   - Z: High-impedance
   - L: High-impedance with an active pulldown resistor
   - H: High-impedance with an active pullup resistor
6. **BALL RESET REL. STATE:** The state of the terminal at reset release.
   - 0: The buffer drives V_{OL} (pulldown/pullup resistor not activated)
     0(PD): The buffer drives V_{OL} with an active pulldown resistor.
   - 1: The buffer drives V_{OH} (pulldown/pullup resistor not activated)
     1(PU): The buffer drives V_{OH} with an active pullup resistor.
   - Z: High-impedance
   - L: High-impedance with an active pulldown resistor
   - H : High-impedance with an active pullup resistor
7. **RESET REL. MODE:** This mode is automatically configured on release of the internal GLOBAL_PWRON reset.
8. **POWER:** The voltage supply that powers the terminal's I/O buffers.
9. **VOLTAGE:** Supply voltage for associated pin.
10. **HYS:** Indicates if the input buffer is with hysteresis.
11. **LOAD:** Load capacitance of the associated output buffer.
12. **PULL U/D - TYPE:** Denotes the presence of an internal pullup or pulldown resistor. Pullup and pulldown resistors can be enabled or disabled via software.

Copyright © 2009–2014, Texas Instruments Incorporated

13. **IO CELL:** IO cell information.

Note: Configuring two pins to the same input signal is not supported as it can yield unexpected results. This can be easily prevented with the proper software configuration.

Table 4-1. Ball Characteristics (ZCN Pkg.)

BALL LOCATION [1]	PIN NAME [2]	MODE [3]	TYPE [4]	BALL RESET STATE [5]	BALL RESET REL. STATE [6]	RESET REL. MODE [7]	POWER [8]	VOLTAGE [9]	HYS [10]	LOAD (pF) [11]	PULL U/D TYPE [12]	IO CELL [13]
B21	sdrc_d0	0	IO	L	Z	0	VDDS	1.8V	Yes	4	PU/ PD	LVCMOS
A21	sdrc_d1	0	IO	L	Z	0	VDDS	1.8V	Yes	4	PU/ PD	LVCMOS
D20	sdrc_d2	0	IO	L	Z	0	VDDS	1.8V	Yes	4	PU/ PD	LVCMOS
C20	sdrc_d3	0	IO	L	Z	0	VDDS	1.8V	Yes	4	PU/ PD	LVCMOS
E19	sdrc_d4	0	IO	L	Z	0	VDDS	1.8V	Yes	4	PU/ PD	LVCMOS
D19	sdrc_d5	0	IO	L	Z	0	VDDS	1.8V	Yes	4	PU/ PD	LVCMOS
C19	sdrc_d6	0	IO	L	Z	0	VDDS	1.8V	Yes	4	PU/ PD	LVCMOS
B19	sdrc_d7	0	IO	L	Z	0	VDDS	1.8V	Yes	4	PU/ PD	LVCMOS
B18	sdrc_d8	0	IO	L	Z	0	VDDS	1.8V	Yes	4	PU/ PD	LVCMOS
D17	sdrc_d9	0	IO	L	Z	0	VDDS	1.8V	Yes	4	PU/ PD	LVCMOS
C17	sdrc_d10	0	IO	L	Z	0	VDDS	1.8V	Yes	4	PU/ PD	LVCMOS
D16	sdrc_d11	0	IO	L	Z	0	VDDS	1.8V	Yes	4	PU/ PD	LVCMOS
C16	sdrc_d12	0	IO	L	Z	0	VDDS	1.8V	Yes	4	PU/ PD	LVCMOS
B16	sdrc_d13	0	IO	L	Z	0	VDDS	1.8V	Yes	4	PU/ PD	LVCMOS
A16	sdrc_d14	0	IO	L	Z	0	VDDS	1.8V	Yes	4	PU/ PD	LVCMOS
A15	sdrc_d15	0	IO	L	Z	0	VDDS	1.8V	Yes	4	PU/ PD	LVCMOS
A7	sdrc_d16	0	IO	L	Z	0	VDDS	1.8V	Yes	4	PU/ PD	LVCMOS
B7	sdrc_d17	0	IO	L	Z	0	VDDS	1.8V	Yes	4	PU/ PD	LVCMOS
D7	sdrc_d18	0	IO	L	Z	0	VDDS	1.8V	Yes	4	PU/ PD	LVCMOS
E7	sdrc_d19	0	IO	L	Z	0	VDDS	1.8V	Yes	4	PU/ PD	LVCMOS
C6	sdrc_d20	0	IO	L	Z	0	VDDS	1.8V	Yes	4	PU/ PD	LVCMOS
D6	sdrc_d21	0	IO	L	Z	0	VDDS	1.8V	Yes	4	PU/ PD	LVCMOS
B5	sdrc_d22	0	IO	L	Z	0	VDDS	1.8V	Yes	4	PU/ PD	LVCMOS
C5	sdrc_d23	0	IO	L	Z	0	VDDS	1.8V	Yes	4	PU/ PD	LVCMOS
B4	sdrc_d24	0	IO	L	Z	0	VDDS	1.8V	Yes	4	PU/ PD	LVCMOS
A3	sdrc_d25	0	IO	L	Z	0	VDDS	1.8V	Yes	4	PU/ PD	LVCMOS
B3	sdrc_d26	0	IO	L	Z	0	VDDS	1.8V	Yes	4	PU/ PD	LVCMOS
C3	sdrc_d27	0	IO	L	Z	0	VDDS	1.8V	Yes	4	PU/ PD	LVCMOS
C2	sdrc_d28	0	IO	L	Z	0	VDDS	1.8V	Yes	4	PU/ PD	LVCMOS
D2	sdrc_d29	0	IO	L	Z	0	VDDS	1.8V	Yes	4	PU/ PD	LVCMOS
B1	sdrc_d30	0	IO	L	Z	0	VDDS	1.8V	Yes	4	PU/ PD	LVCMOS
C1	sdrc_d31	0	IO	L	Z	0	VDDS	1.8V	Yes	4	PU/ PD	LVCMOS
A12	sdrc_ba0	0	O	L	Z	0	VDDS	1.8V	No	8	PU/ PD	LVCMOS
C13	sdrc_ba1	0	O	L	Z	0	VDDS	1.8V	No	8	PU/ PD	LVCMOS
D13	sdrc_ba2	0	O	L	Z	0	VDDS	1.8V	No	8	PU/ PD	LVCMOS
A11	sdrc_a0	0	O	L	Z	0	VDDS	1.8V	No	8	PU/ PD	LVCMOS
B11	sdrc_a1	0	O	L	Z	0	VDDS	1.8V	No	8	PU/ PD	LVCMOS
C11	sdrc_a2	0	O	L	Z	0	VDDS	1.8V	No	8	PU/ PD	LVCMOS
D11	sdrc_a3	0	O	L	Z	0	VDDS	1.8V	No	8	PU/ PD	LVCMOS
E11	sdrc_a4	0	O	L	Z	0	VDDS	1.8V	No	8	PU/ PD	LVCMOS
A10	sdrc_a5	0	O	L	Z	0	VDDS	1.8V	No	8	PU/ PD	LVCMOS
B10	sdrc_a6	0	O	L	Z	0	VDDS	1.8V	No	8	PU/ PD	LVCMOS
C10	sdrc_a7	0	O	L	Z	0	VDDS	1.8V	No	8	PU/ PD	LVCMOS
D10	sdrc_a8	0	O	L	Z	0	VDDS	1.8V	No	8	PU/ PD	LVCMOS
E10	sdrc_a9	0	O	L	Z	0	VDDS	1.8V	No	8	PU/ PD	LVCMOS
A9	sdrc_a10	0	O	L	Z	0	VDDS	1.8V	No	8	PU/ PD	LVCMOS
B9	sdrc_a11	0	O	L	Z	0	VDDS	1.8V	No	8	PU/ PD	LVCMOS
A8	sdrc_a12	0	O	L	Z	0	VDDS	1.8V	No	8	PU/ PD	LVCMOS
B8	sdrc_a13	0	O	L	Z	0	VDDS	1.8V	No	8	PU/ PD	LVCMOS

Copyright © 2009–2014, Texas Instruments Incorporated

Table 4-1. Ball Characteristics (ZCN Pkg.) (continued)

BALL LOCATION [1]	PIN NAME [2]	MODE [3]	TYPE [4]	BALL RESET STATE [5]	BALL RESET REL. STATE [6]	RESET REL. MODE [7]	POWER [8]	VOLTAGE [9]	HYS [10]	LOAD (pF) [11]	PULL U/D TYPE [12]	IO CELL [13]
D8	sdrc_a14	0	O	L	Z	0	VDDS	1.8V	No	8	PU/ PD	LVCMOS
E13	sdrc_ncs0	0	O	L	Z	0	VDDS	1.8V	No	8	PU/ PD	LVCMOS
A14	sdrc_ncs1	0	O	L	Z	0	VDDS	1.8V	No	8	PU/ PD	LVCMOS
A13	sdrc_clk	0	O	L	Z	0	VDDS	1.8V	Yes	8	PU/ PD	LVCMOS
B13	sdrc_nclk	0	O	L	Z	0	VDDS	1.8V	No	8	PU/ PD	LVCMOS
D14	sdrc_cke0	0	O	L	PD	7	VDDS	1.8V	Yes	8	PU/ PD	LVCMOS
	sdrc_cke0_safe	7		L								
C14	sdrc_nras	0	O	L	Z	0	VDDS	1.8V	No	8	PU/ PD	LVCMOS
E14	sdrc_ncas	0	O	L	Z	0	VDDS	1.8V	No	8	PU/ PD	LVCMOS
B14	sdrc_nwe	0	O	L	Z	0	VDDS	1.8V	No	8	PU/ PD	LVCMOS
C21	sdrc_dm0	0	O	L	Z	0	VDDS	1.8V	No	8	PU/ PD	LVCMOS
B15	sdrc_dm1	0	O	L	Z	0	VDDS	1.8V	No	8	PU/ PD	LVCMOS
E8	sdrc_dm2	0	O	L	Z	0	VDDS	1.8V	No	8	PU/ PD	LVCMOS
D1	sdrc_dm3	0	O	L	Z	0	VDDS	1.8V	No	8	PU/ PD	LVCMOS
B20	sdrc_dqs0p	0	IO	L	Z	0	VDDS	1.8V	Yes	8	PU/ PD	LVCMOS
B17	sdrc_dqs1p	0	IO	L	Z	0	VDDS	1.8V	Yes	8	PU/ PD	LVCMOS
A6	sdrc_dqs2p	0	IO	L	Z	0	VDDS	1.8V	Yes	8	PU/ PD	LVCMOS
A2	sdrc_dqs3p	0	IO	L	Z	0	VDDS	1.8V	Yes	8	PU/ PD	LVCMOS
A20	sdrc_dqs0n	0	IO	L	Z	0	VDDS	1.8V		8	PU/ PD	LVCMOS
A17	sdrc_dqs1n	0	IO	L	Z	0	VDDS	1.8V		8	PU/ PD	LVCMOS
B6	sdrc_dqs2n	0	IO	L	Z	0	VDDS	1.8V		8	PU/ PD	LVCMOS
B2	sdrc_dqs3n	0	IO	L	Z	0	VDDS	1.8V		8	PU/ PD	LVCMOS
C8	sdrc_odt	0		L	Z	0	VDDS	1.8V		8	PU/ PD	LVCMOS
A19	sdrc_strben0	0		L	Z	0	VDDS	1.8V		8	PU/ PD	LVCMOS
A18	sdrc_strben_dly0	0		L	Z	0	VDDS	1.8V		8	PU/ PD	LVCMOS
A5	sdrc_strben1	0		L	Z	0	VDDS	1.8V		8	PU/ PD	LVCMOS
A4	sdrc_strben_dly1	0		L	Z	0	VDDS	1.8V		8	PU/ PD	LVCMOS
B12	ddr_padref	0	A				VDDS	1.8V				
E3	gpmc_a1	0	O	L	PD	7	VDDSHV	1.8V/3.3V	Yes	30	PU/ PD	LVCMOS
	gpio_34	4	IO									
	safe_mode	7										
E2	gpmc_a2	0	O	L	PD	7	VDDSHV	1.8V/3.3V	Yes	30	PU/ PD	LVCMOS
	gpio_35	4	IO									
	safe_mode	7										
E1	gpmc_a3	0	O	L	PD	7	VDDSHV	1.8V/3.3V	Yes	30	PU/ PD	LVCMOS
	gpio_36	4	IO									
	safe_mode	7										
F7	gpmc_a4	0	O	L	PD	7	VDDSHV	1.8V/3.3V	Yes	30	PU/ PD	LVCMOS
	gpio_37	4	IO									
	safe_mode	7										
F6	gpmc_a5	0	O	L	PD	7	VDDSHV	1.8V/3.3V	Yes	30	PU/ PD	LVCMOS
	gpio_38	4	IO									
	safe_mode	7										
F4	gpmc_a6	0	O	H	PU	7	VDDSHV	1.8V/3.3V	Yes	30	PU/ PD	LVCMOS
	gpio_39	4	IO									
	safe_mode	7										
F3	gpmc_a7	0	O	H	PU	7	VDDSHV	1.8V/3.3V	Yes	30	PU/ PD	LVCMOS
	gpio_40	4	IO									
	safe_mode	7										
F2	gpmc_a8	0	O	H	PU	7	VDDSHV	1.8V/3.3V	Yes	30	PU/ PD	LVCMOS
	gpio_41	4	IO									
	safe_mode	7										
F1	gpmc_a9	0	O	H	PU	7	VDDSHV	1.8V/3.3V	Yes	30	PU/ PD	LVCMOS

Copyright © 2009–2014, Texas Instruments Incorporated

Table 4-1. Ball Characteristics (ZCN Pkg.) (continued)

BALL LOCATION [1]	PIN NAME [2]	MODE [3]	TYPE [4]	BALL RESET STATE [5]	BALL RESET REL. STATE [6]	RESET REL. MODE [7]	POWER [8]	VOLTAGE [9]	HYS [10]	LOAD (pF) [11]	PULL U/D TYPE [12]	IO CELL [13]
	sys_ ndmareq2	1	I									
	gpio_42	4	IO									
	safe_mode	7										
G6	gpmc_a10	0	O	H	PU	7	VDDSHV	1.8V/3.3V	Yes	30	PU/ PD	LVCMOS
	sys_ ndmareq3	1	I									
	gpio_43	4	IO									
	safe_mode	7										
G5	gpmc_d0	0	IO	H	PU	0	VDDSHV	1.8V/3.3V		30	PU/ PD	LVCMOS
G4	gpmc_d1	0	IO	H	PU	0	VDDSHV	1.8V/3.3V	Yes	30	PU/ PD	LVCMOS
G3	gpmc_d2	0	IO	H	PU	0	VDDSHV	1.8V/3.3V	Yes	30	PU/ PD	LVCMOS
G2	gpmc_d3	0	IO	H	PU	0	VDDSHV	1.8V/3.3V	Yes	30	PU/ PD	LVCMOS
G1	gpmc_d4	0	IO	H	PU	0	VDDSHV	1.8V/3.3V	Yes	30	PU/ PD	LVCMOS
H2	gpmc_d5	0	IO	H	PU	0	VDDSHV	1.8V/3.3V	Yes	30	PU/ PD	LVCMOS
H1	gpmc_d6	0	IO	H	PU	0	VDDSHV	1.8V/3.3V	Yes	30	PU/ PD	LVCMOS
J5	gpmc_d7	0	IO	H	PU	0	VDDSHV	1.8V/3.3V	Yes	30	PU/ PD	LVCMOS
J4	gpmc_d8	0	IO	H	PU	0	VDDSHV	1.8V/3.3V	Yes	30	PU/ PD	LVCMOS
	gpio_44	4	IO									
J3	gpmc_d9	0	IO	H	PU	0	VDDSHV	1.8V/3.3V	Yes	30	PU/ PD	LVCMOS
	gpio_45	4	IO									
J2	gpmc_d10	0	IO	H	PU	0	VDDSHV	1.8V/3.3V	Yes	30	PU/ PD	LVCMOS
	gpio_46	4	IO									
J1	gpmc_d11	0	IO	H	PU	0	VDDSHV	1.8V/3.3V	Yes	30	PU/ PD	LVCMOS
	gpio_47	4	IO									
K4	gpmc_d12	0	IO	H	PU	0	VDDSHV	1.8V/3.3V	Yes	30	PU/ PD	LVCMOS
	gpio_48	4	IO									
K3	gpmc_d13	0	IO	H	PU	0	VDDSHV	1.8V/3.3V	Yes	30	PU/ PD	LVCMOS
	gpio_49	4	IO									
K2	gpmc_d14	0	IO	H	PU	0	VDDSHV	1.8V/3.3V	Yes	30	PU/ PD	LVCMOS
	gpio_50	4	IO									
K1	gpmc_d15	0	IO	H	PU	0	VDDSHV	1.8V/3.3V	Yes	30	PU/ PD	LVCMOS
	gpio_51	4	IO									
L2	gpmc_ncs0	0	O	H	Z	0	VDDSHV	1.8V/3.3V	No	30	NA	LVCMOS
L1	gpmc_ncs1	0	O	H	Z	0	VDDSHV	1.8V/3.3V	Yes	30	PU/ PD	LVCMOS
	gpio_52	4	IO									
M4	gpmc_ncs2	0	O	H	PU	7	VDDSHV	1.8V/3.3V	Yes	30	PU/ PD	LVCMOS
	gpt9_pwm_evt	2	IO									
	gpio_53	4	IO									
	safe_mode	7										
M3	gpmc_ncs3	0	O	H	PU	7	VDDSHV	1.8V/3.3V	Yes	30	PU/ PD	LVCMOS
	sys_ ndmareq0	1	I									
	gpt10_pwm_evt	2	IO									
	gpio_54	4	IO									
	safe_mode	7										
M2	gpmc_ncs4	0	O	H	PU	7	VDDSHV	1.8V/3.3V	Yes	30	PU/ PD	LVCMOS
	sys_ ndmareq1	1	I									
	gpt9_pwm_evt	3	IO									
	gpio_55	4	IO									
	safe_mode	7										

Copyright © 2009–2014, Texas Instruments Incorporated

Table 4-1. Ball Characteristics (ZCN Pkg.) (continued)

BALL LOCATION [1]	PIN NAME [2]	MODE [3]	TYPE [4]	BALL RESET STATE [5]	BALL RESET REL. STATE [6]	RESET REL. MODE [7]	POWER [8]	VOLTAGE [9]	HYS [10]	LOAD (pF) [11]	PULL U/D TYPE [12]	IO CELL [13]
M1	gpmc_ncs5	0	O	H	PU	7	VDDSHV	1.8V/3.3V	Yes	30	PU/ PD	LVCMOS
	sys_ ndmareq2	1	I									
	gpt10_pwm_ evt	3	IO									
	gpio_56	4	IO									
	safe_mode	7										
N5	gpmc_ncs6	0	O	H	PU	7	VDDSHV	1.8V/3.3V	Yes	30	PU/ PD	LVCMOS
	sys_ ndmareq3	1	I									
	gpt11_pwm_ evt	3	IO									
	gpio_57	4	IO									
	safe_mode	7										
N4	gpmc_ncs7	0	O	H	PU	7	VDDSHV	1.8V/3.3V	Yes	30	PU/ PD	LVCMOS
	gpmc_io_dir	1	O									
	gpt8_pwm_e vt	3	IO									
	gpio_58	4	IO									
	safe_mode	7										
N1	gpmc_clk	0	O	L	Z	0	VDDSHV	1.8V/3.3V	Yes	30	PU/ PD	LVCMOS
	gpio_59	4	IO									
R1	gpmc_nadv_ ale	0	O	L	Z	0	VDDSHV	1.8V/3.3V	No	30	PU/ PD	LVCMOS
R2	gpmc_noe	0	O	H	Z	0	VDDSHV	1.8V/3.3V	No	30	PU/ PD	LVCMOS
R3	gpmc_nwe	0	O	H	Z	0	VDDSHV	1.8V/3.3V	No	30	PU/ PD	LVCMOS
R4	gpmc_nbe0_ cle	0	O	L	Z	0	VDDSHV	1.8V/3.3V	Yes	30	PU/ PD	LVCMOS
	gpio_60	4	IO									
T1	gpmc_nbe1	0	O	L	PD	7	VDDSHV	1.8V/3.3V	Yes	30	PU/ PD	LVCMOS
	gpio_61	4	IO									
	safe_mode	7										
T2	gpmc_nwp	0	O	L	Z	0	VDDSHV	1.8V/3.3V	Yes	30	PU/ PD	LVCMOS
	gpio_62	4	IO									
T3	gpmc_wait0	0	I	H	PU	0	VDDSHV	1.8V/3.3V	Yes	30	PU/ PD	LVCMOS
T4	gpmc_wait1	0	I	H	PU	7	VDDSHV	1.8V/3.3V	Yes	30	PU/ PD	LVCMOS
	uart4_tx	1	O									
	gpio_63	4	IO									
	safe_mode	7										
T5	gpmc_wait2	0	I	H	PU	7	VDDSHV	1.8V/3.3V	Yes	30	PU/ PD	LVCMOS
	uart4_rx	1	I									
	gpio_64	4	IO									
	safe_mode	7										
U1	gpmc_wait3	0	I	H	PU	7	VDDSHV	1.8V/3.3V	Yes	30	PU/ PD	LVCMOS
	sys_ ndmareq1	1	I									
	uart3_cts_rct x	2	I									
	gpio_65	4	IO									
	safe_mode	7										
AE23	dss_pclk	0	O	H	PU	7	VDDSHV	1.8V/3.3V	Yes	20	PU/ PD	LVCMOS
	gpio_66	4	IO									
	hw_dbg12	5	O									
	safe_mode	7										
AD22	dss_hsync	0	O	H	PU	7	VDDSHV	1.8V/3.3V	Yes	20	PU/ PD	LVCMOS
	gpio_67	4	IO									
	hw_dbg13	5	O									
	safe_mode	7										

Copyright © 2009–2014, Texas Instruments Incorporated

Table 4-1. Ball Characteristics (ZCN Pkg.) (continued)

BALL LOCATION [1]	PIN NAME [2]	MODE [3]	TYPE [4]	BALL RESET STATE [5]	BALL RESET REL. STATE [6]	RESET REL. MODE [7]	POWER [8]	VOLTAGE [9]	HYS [10]	LOAD (pF) [11]	PULL U/D TYPE [12]	IO CELL [13]
AD23	dss_vsync	0	O	H	PU	7	VDDSHV	1.8V/3.3V	Yes	20	PU/ PD	LVCMOS
	gpio_68	4	IO									
	safe_mode	7										
AE24	dss_acbias	0	O	L	PD	7	VDDSHV	1.8V/3.3V	Yes	20	PU/ PD	LVCMOS
	gpio_69	4	IO									
	safe_mode	7										
AD24	dss_data0	0	O	L	PD	7	VDDSHV	1.8V/3.3V	Yes	20	PU/ PD	LVCMOS
	uart1_cts	2	I									
	gpio_70	4	IO									
	safe_mode	7										
AD25	dss_data1	0	O	L	PD	7	VDDSHV	1.8V/3.3V	Yes	20	PU/ PD	LVCMOS
	uart1_rts	2	O									
	gpio_71	4	IO									
	safe_mode	7										
AC23	dss_data2	0	O	L	PD	7	VDDSHV	1.8V/3.3V	Yes	20	PU/ PD	LVCMOS
	gpio_72	4	IO									
	safe_mode	7										
AC24	dss_data3	0	O	L	PD	7	VDDSHV	1.8V/3.3V	Yes	20	PU/ PD	LVCMOS
	gpio_73	4	IO									
	safe_mode	7										
AC25	dss_data4	0	O	L	PD	7	VDDSHV	1.8V/3.3V	Yes	20	PU/ PD	LVCMOS
	uart3_rx_ irrx	2	I									
	gpio_74	4	IO									
	safe_mode	7										
AB24	dss_data5	0	O	L	PD	7	VDDSHV	1.8V/3.3V	Yes	20	PU/ PD	LVCMOS
	uart3_tx_ irtx	2	O									
	gpio_75	4	IO									
	safe_mode	7										
AB25	dss_data6	0	O	L	PD	7	VDDSHV	1.8V/3.3V	Yes	20	PU/ PD	LVCMOS
	uart1_tx	2	O									
	gpio_76	4	IO									
	hw_dbg14	5	O									
	safe_mode	7										
AA23	dss_data7	0	O	L	PD	7	VDDSHV	1.8V/3.3V	Yes	20	PU/ PD	LVCMOS
	uart1_rx	2	I									
	gpio_77	4	IO									
	hw_dbg15	5	O									
	safe_mode	7										
AA24	dss_data8	0	O	L	PD	7	VDDSHV	1.8V/3.3V	Yes	20	PU/ PD	LVCMOS
	gpio_78	4	IO									
	hw_dbg16	5	O									
	safe_mode	7										
AA25	dss_data9	0	O	L	PD	7	VDDSHV	1.8V/3.3V	Yes	20	PU/ PD	LVCMOS
	gpio_79	4	IO									
	hw_dbg17	5	O									
	safe_mode	7										
Y22	dss_data10	0	O	L	PD	7	VDDSHV	1.8V/3.3V	Yes	20	PU/ PD	LVCMOS
	gpio_80	4	IO									
	safe_mode	7										
Y23	dss_data11	0	O	L	PD	7	VDDSHV	1.8V/3.3V	Yes	20	PU/ PD	LVCMOS
	gpio_81	4	IO									
	safe_mode	7										
Y24	dss_data12	0	O	L	PD	7	VDDSHV	1.8V/3.3V	Yes	20	PU/ PD	LVCMOS
	gpio_82	4	IO									
	safe_mode	7										

Copyright © 2009–2014, Texas Instruments Incorporated

Table 4-1. Ball Characteristics (ZCN Pkg.) (continued)

BALL LOCATION [1]	PIN NAME [2]	MODE [3]	TYPE [4]	BALL RESET STATE [5]	BALL RESET REL. STATE [6]	RESET REL. MODE [7]	POWER [8]	VOLTAGE [9]	HYS [10]	LOAD (pF) [11]	PULL U/D TYPE [12]	IO CELL [13]
Y25	dss_data13	0	O	L	PD	7	VDDSHV	1.8V/3.3V	Yes	20	PU/ PD	LVCMOS
	gpio_83	4	IO									
	safe_mode	7										
W21	dss_data14	0	O	L	PD	7	VDDSHV	1.8V/3.3V	Yes	20	PU/ PD	LVCMOS
	gpio_84	4	IO									
	safe_mode	7										
W22	dss_data15	0	O	L	PD	7	VDDSHV	1.8V/3.3V	Yes	20	PU/ PD	LVCMOS
	gpio_85	4	IO									
	safe_mode	7										
W23	dss_data16	0	O	L	PD	7	VDDSHV	1.8V/3.3V	Yes	20	PU/ PD	LVCMOS
	gpio_86	4	IO									
	safe_mode	7										
W24	dss_data17	0	O	L	PD	7	VDDSHV	1.8V/3.3V	Yes	20	PU/ PD	LVCMOS
	gpio_87	4	IO									
	safe_mode	7										
W25	dss_data18	0	O	L	PD	7	VDDSHV	1.8V/3.3V	Yes	20	PU/ PD	LVCMOS
	mcspi3_clk	2	IO									
	dss_data4	3	O									
	gpio_88	4	IO									
	safe_mode	7										
V24	dss_data19	0	O	L	PD	7	VDDSHV	1.8V/3.3V	Yes	20	PU/ PD	LVCMOS
	mcspi3_ simo	2	IO									
	dss_data3	3	O									
	gpio_89	4	IO									
	safe_mode	7										
V25	dss_data20	0	O	L	PD	7	VDDSHV	1.8V/3.3V	Yes	20	PU/ PD	LVCMOS
	mcspi3_ somi	2	IO									
	dss_data2	3	O									
	gpio_90	4	IO									
	safe_mode	7										
U21	dss_data21	0	O	L	PD	7	VDDSHV	1.8V/3.3V	Yes	20	PU/ PD	LVCMOS
	mcspi3_cs0	2	IO									
	dss_data1	3	O									
	gpio_91	4	IO									
	safe_mode	7										
U22	dss_data22	0	O	L	PD	7	VDDSHV	1.8V/3.3V	Yes	20	PU/ PD	LVCMOS
	mcspi3_cs1	2	O									
	dss_data0	3	O									
	gpio_92	4	IO									
	safe_mode	7										
U23	dss_data23	0	O	L	PD	7	VDDSHV	1.8V/3.3V	Yes	20	PU/ PD	LVCMOS
	dss_data5	3	O									
	gpio_93	4	IO									
	safe_mode	7										
H24	tv_out2	0	O			0	VDDA_DAC	1.8V			NA	10-bit DAC
K21	tv_out1	0	O			0	VDDA_DAC	1.8V			NA	10-bit DAC
K20	tv_vfb1	0	O	Z	NA	0	VDDA_DAC	1.8V			NA	10-bit DAC
H23	tv_vfb2	0	O	Z	NA	0	VDDA_DAC	1.8V			NA	10-bit DAC
H20	tv_vref	0	I	Z	NA	0	VDDA_DAC	1.8V			NA	10-bit DAC
AD2	ccdc_pclk	0	IO	L	PD	7	VDDSHV	1.8V/3.3V	Yes	15	PU/ PD	LVCMOS
	gpio_94	4	IO									
	hw_dbg0	5	O									
	safe_mode	7										

Copyright © 2009–2014, Texas Instruments Incorporated

Table 4-1. Ball Characteristics (ZCN Pkg.) (continued)

BALL LOCATION [1]	PIN NAME [2]	MODE [3]	TYPE [4]	BALL RESET STATE [5]	BALL RESET REL. STATE [6]	RESET REL. MODE [7]	POWER [8]	VOLTAGE [9]	HYS [10]	LOAD (pF) [11]	PULL U/D TYPE [12]	IO CELL [13]
AD1	ccdc_field	0	IO	L	PD	7	VDDSHV	1.8V/3.3V	Yes	15	PU/ PD	LVCMOS
	ccdc_data8	1	I									
	uart4_tx	2	O									
	i2c3_scl	3	IOD									
	gpio_95	4	IO									
	hw_dbg1	5	O									
	safe_mode	7										
AE2	ccdc_ hd	0	IO	L	PD	7	VDDSHV	1.8V/3.3V	Yes	15	PU/ PD	LVCMOS
	uart4_rts	2	O									
	gpio_96	4	IO									
	safe_mode	7										
AD3	ccdc_vd	0	IO	L	PD	7	VDDSHV	1.8V/3.3V	Yes	15	PU/ PD	LVCMOS
	uart4_cts	2	I									
	gpio_97	4	IO									
	hw_dbg2	5	O									
	safe_mode	7										
AE3	ccdc_wen	0	IO	L	PD	7	VDDSHV	1.8V/3.3V	Yes	15	PU/PD	LVCMOS
	ccdc_data9	1	I									
	uart4_rx	2	I									
	gpio_98	4	IO									
	hw_dbg3	5	O									
	safe_mode	7										
AD4	ccdc_data0	0	I	L	PD	7	VDDSHV	1.8V/3.3V	Yes	15	PU/PD	LVCMOS
	i2c3_sda	3	IOD									
	gpio_99	4	I									
	safe_mode	7										
AE4	ccdc_data1	0	I	L	PD	7	VDDSHV	1.8V/3.3V	Yes	15	PU/PD	LVCMOS
	gpio_100	4	I									
	safe_mode	7										
AC5	ccdc_data2	0	I	L	PD	7	VDDSHV	1.8V/3.3V	Yes	15	PU/ PD	LVCMOS
	gpio_101	4	IO									
	hw_dbg4	5	O									
	safe_mode	7										
AD5	ccdc_data3	0	I	L	PD	7	VDDSHV	1.8V/3.3V	Yes	15	PU/ PD	LVCMOS
	gpio_102	4	IO									
	hw_dbg5	5	O									
	safe_mode	7										
AE5	ccdc_data4	0	I	L	PD	7	VDDSHV	1.8V/3.3V	Yes	15	PU/ PD	LVCMOS
	gpio_103	4	IO									
	hw_dbg6	5	O									
	safe_mode	7										
Y6	ccdc_data5	0	I	L	PD	7	VDDSHV	1.8V/3.3V	Yes	15	PU/ PD	LVCMOS
	gpio_104	4	IO									
	hw_dbg7	5	O									
	safe_mode	7										
AB6	ccdc_data6	0	I	L	PD	7	VDDSHV	1.8V/3.3V	Yes	15	PU/PD	LVCMOS
	gpio_105	4	IO									
	safe_mode	7										
AC6	ccdc_data7	0	I	L	PD	7	VDDSHV	1.8V/3.3V	Yes	15	PU/PD	LVCMOS
	gpio_106	4	IO									
	safe_mode	7										
AE6	rmii_mdio_data	0	IO	H	PU	7	VDDSHV	1.8V/3.3V	Yes	25	PU/PD	LVCMOS
	ccdc_data8	1	I									
	gpio_107	4	IO									

Copyright © 2009–2014, Texas Instruments Incorporated

Table 4-1. Ball Characteristics (ZCN Pkg.) (continued)

BALL LOCATION [1]	PIN NAME [2]	MODE [3]	TYPE [4]	BALL RESET STATE [5]	BALL RESET REL. STATE [6]	RESET REL. MODE [7]	POWER [8]	VOLTAGE [9]	HYS [10]	LOAD (pF) [11]	PULL U/D TYPE [12]	IO CELL [13]
	safe_mode	7										
AD6	rmii_mdio_clk	0	O	H	PU	7	VDDSHV	1.8V/3.3V	Yes	25	PU/PD	LVCMOS
	ccdc_data9	1	I									
	gpio_108	4	IO									
	safe_mode	7										
Y7	rmii_rxd0	0	I	H	PU	7	VDDSHV	1.8V/3.3V	Yes	25	PU/ PD	LVCMOS
	ccdc_data10	1	I									
	gpio_109	4	IO									
	hw_dbg8	5	O									
	safe_mode	7										
AA7	rmii_rxd1	0	I	H	PU	7	VDDSHV	1.8V/3.3V	Yes	25	PU/ PD	LVCMOS
	ccdc_data11	1	I									
	gpio_110	4	IO									
	hw_dbg9	5	O									
	safe_mode	7										
AB7	rmii_crs_dv	0	I	H	PU	7	VDDSHV	1.8V/3.3V	Yes	25	PU/ PD	LVCMOS
	ccdc_data12	1	I									
	gpio_111	4	IO									
	safe_mode	7										
AC7	rmii_rxer	0	I	H	PU	7	VDDSHV	1.8V/3.3V	Yes	25	PU/ PD	LVCMOS
	ccdc_data13	1	I									
	gpio_167	4	IO									
	hw_dbg10	5	O									
	safe_mode	7										
AD7	rmii_txd0	0	O	H	PU	7	VDDSHV	1.8V/3.3V	Yes	25	PU/ PD	LVCMOS
	ccdc_ data14	1	I									
	gpio_126	4	IO									
	hw_dbg11	5	O									
	safe_mode	7										
AE7	rmii_txd1	0	O	H	PU	7	VDDSHV	1.8V/3.3V	Yes	25	PU/PD	LVCMOS
	ccdc_data15	1	I									
	gpio_112	4	I									
	safe_mode	7										
AD8	rmii_txen	0	O	H	PU	7	VDDSHV	1.8V/3.3V		25	PU/PD	LVCMOS
	gpio_113	4	I						NA			
	safe_mode	7										
AE8	rmii_50mhz_clk	0	I	H	PU	7	VDDSHV	1.8V/3.3V		25	PU/ PD	LVCMOS
	gpio_114	4	I						NA			
	safe_mode	7										
D25	mcbsp2_fsx	0	IO	L	PD	7	VDDSHV	1.8V/3.3V	Yes	30	PU/ PD	LVCMOS
	gpio_116	4	IO									
	safe_mode	7										
C25	mcbsp2_clkx	0	IO	L	PD	7	VDDSHV	1.8V/3.3V	Yes	30	PU/ PD	LVCMOS
	gpio_117	4	IO									
	safe_mode	7										
B25	mcbsp2_dr	0	I	L	PD	7	VDDSHV	1.8V/3.3V	Yes	30	PU/ PD	LVCMOS
	gpio_118	4	IO									
	safe_mode	7										
D24	mcbsp2_dx	0	IO	L	PD	7	VDDSHV	1.8V/3.3V	Yes	30	PU/ PD	LVCMOS
	gpio_119	4	IO									
	safe_mode	7										
AA9	mmc1_clk	0	O	L	PD	7	VDDSHV	1.8V/3.3V	Yes	30	PU/ PD	LVCMOS
	gpio_120	4	IO									

Copyright © 2009–2014, Texas Instruments Incorporated

Table 4-1. Ball Characteristics (ZCN Pkg.) (continued)

BALL LOCATION [1]	PIN NAME [2]	MODE [3]	TYPE [4]	BALL RESET STATE [5]	BALL RESET REL. STATE [6]	RESET REL. MODE [7]	POWER [8]	VOLTAGE [9]	HYS [10]	LOAD (pF) [11]	PULL U/D TYPE [12]	IO CELL [13]
	safe_mode	7										
AB9	mmc1_cmd	0	IO	L	PD	7	VDDSHV	1.8V/3.3V	Yes	30	PU/ PD	LVCMOS
	gpio_121	4	IO									
	safe_mode	7										
AC9	mmc1_dat0	0	IO	L	PD	7	VDDSHV	1.8V/3.3V	Yes	30	PU/ PD	LVCMOS
	mcspi2_clk	1	IO									
	gpio_122	4	IO									
	safe_mode	7										
AD9	mmc1_dat1	0	IO	L	PD	7	VDDSHV	1.8V/3.3V	Yes	30	PU/ PD	LVCMOS
	mcspi2_simo	1	IO									
	gpio_123	4	IO									
	safe_mode	7										
AE9	mmc1_dat2	0	IO	L	PD	7	VDDSHV	1.8V/3.3V	Yes	30	PU/ PD	LVCMOS
	mcspi2_somi	1	IO									
	gpio_124	4	IO									
	safe_mode	7										
AA10	mmc1_dat3	0	IO	L	PD	7	VDDSHV	1.8V/3.3V	Yes	30	PU/ PD	LVCMOS
	mcspi2_cs0	1	O									
	gpio_125	4	IO									
	safe_mode	7										
AB10	mmc1_dat4	0	IO	L	PD	7	VDDSHV	1.8V/3.3V	No	30	PU/ PD	LVCMOS
	gpio_126	4	IO									
	safe_mode	7										
AC10	mmc1_dat5	0	IO	L	PD	7	VDDSHV	1.8V/3.3V	No	30	PU/ PD	LVCMOS
	gpio_127	4	IO									
	safe_mode	7										
AD10	mmc1_dat6	0	IO	L	PD	7	VDDSHV	1.8V/3.3V	No	30	PU/ PD	LVCMOS
	gpio_128	4	IO									
	safe_mode	7										
AE10	mmc1_dat7	0	IO	L	PD	7	VDDSHV	1.8V/3.3V	No	30	PU/ PD	LVCMOS
	gpio_129	4	IO									
	safe_mode	7										
AD11	mmc2_clk	0	O	L	PD	7	VDDSHV	1.8V/3.3V	Yes	30	PU/ PD	LVCMOS
	mcspi3_clk	1	IO									
	uart4_cts	2	I									
	gpio_130	4	IO									
	safe_mode	7										
AE11	mmc2_ cmd	0	IO	H	PU	7	VDDSHV	1.8V/3.3V	Yes	30	PU/ PD	LVCMOS
	mcspi3_ simo	1	IO									
	uart4_rts	2	O									
	gpio_131	4	IO									
	safe_mode	7										
AB12	mmc2_ dat0	0	IO	H	PU	7	VDDSHV	1.8V/3.3V	Yes	30	PU/ PD	LVCMOS
	mcspi3_ somi	1	IO									
	uart4_tx	2	O									
	gpio_132	4	IO									
	safe_mode	7										
AC12	mmc2_ dat1	0	IO	H	PU	7	VDDSHV	1.8V/3.3V	Yes	30	PU/ PD	LVCMOS
	uart4_rx	2	I									
	gpio_133	4	IO									
	safe_mode	7										
AD12	mmc2_ dat2	0	IO	H	PU	7	VDDSHV	1.8V/3.3V	Yes	30	PU/ PD	LVCMOS
	mcspi3_cs1	1	O									

Copyright © 2009–2014, Texas Instruments Incorporated

Table 4-1. Ball Characteristics (ZCN Pkg.) (continued)

BALL LOCATION [1]	PIN NAME [2]	MODE [3]	TYPE [4]	BALL RESET STATE [5]	BALL RESET REL. STATE [6]	RESET REL. MODE [7]	POWER [8]	VOLTAGE [9]	HYS [10]	LOAD (pF) [11]	PULL U/D TYPE [12]	IO CELL [13]
	gpio_134	4	IO									
	safe_mode	7										
AE12	mmc2_ dat3	0	IO	H	PU	7	VDDSHV	1.8V/3.3V	Yes	30	PU/ PD	LVCMOS
	mcspi3_cs0	1	IO									
	gpio_135	4	IO									
	safe_mode	7										
AB13	mmc2_ dat4	0	IO	L	PD	7	VDDSHV	1.8V/3.3V	Yes	30	PU/ PD	LVCMOS
	mmc2_dir_dat0	1	O									
	mmc3_dat0	3	IO									
	gpio_136	4	IO									
	safe_mode	7										
AC13	mmc2_ dat5	0	IO	L	PD	7	VDDSHV	1.8V/3.3V	Yes	30	PU/ PD	LVCMOS
	mmc2_dir_dat1	1	O									
	mmc3_dat1	3	IO									
	gpio_137	4	IO									
	mm_fsusb3_rxdp	6	IO									
	safe_mode	7										
AD13	mmc2_ dat6	0	IO	L	PD	7	VDDSHV	1.8V/3.3V	Yes	30	PU/ PD	LVCMOS
	mmc2_dir_cmd	1	O									
	mmc3_dat2	3	IO									
	gpio_138	4	IO									
	safe_mode	7										
AE13	mmc2_ dat7	0	IO	L	PD	7	VDDSHV	1.8V/3.3V	Yes	30	PU/ PD	LVCMOS
	mmc2_ clkin	1	I									
	mmc3_dat3	3	IO									
	gpio_139	4	IO									
	mm_fsusb3_rxdm	6	IO									
	safe_mode	7										
B24	mcbsp3_dx	0	IO	L	PD	7	VDDSHV	1.8V/3.3V	Yes	30	PU/ PD	LVCMOS
	uart2_cts	1	I									
	gpio_140	4	IO									
	safe_mode	7										
C24	mcbsp3_dr	0	I	L	PD	7	VDDSHV	1.8V/3.3V	Yes	30	PU/ PD	LVCMOS
	uart2_rts	1	O									
	gpio_141	4	IO									
	safe_mode	7										
A24	mcbsp3_clkx	0	IO	L	PD	7	VDDSHV	1.8V/3.3V	Yes	30	PU/ PD	LVCMOS
	uart2_tx	1	O									
	gpio_142	4	IO									
	safe_mode	7										
C23	mcbsp3_fsx	0	IO	L	PD	7	VDDSHV	1.8V/3.3V	Yes	30	PU/ PD	LVCMOS
	uart2_rx	1	I									
	gpio_143	4	IO									
	safe_mode	7										
F20	uart2_cts	0	I	H	PU	7	VDDSHV	1.8V/3.3V	Yes	30	PU/ PD	LVCMOS
	mcbsp3_dx	1	IO									
	gpt9_pwm_evt	2	IO									
	gpio_144	4	IO									
	safe_mode	7										
F19	uart2_rts	0	O	H	PU	7	VDDSHV	1.8V/3.3V	Yes	30	PU/ PD	LVCMOS

Copyright © 2009–2014, Texas Instruments Incorporated

Table 4-1. Ball Characteristics (ZCN Pkg.) (continued)

BALL LOCATION [1]	PIN NAME [2]	MODE [3]	TYPE [4]	BALL RESET STATE [5]	BALL RESET REL. STATE [6]	RESET REL. MODE [7]	POWER [8]	VOLTAGE [9]	HYS [10]	LOAD (pF) [11]	PULL U/D TYPE [12]	IO CELL [13]
	mcbsp3_dr	1	I									
	gpt10_pwm_evt	2	IO									
	gpio_145	4	IO									
	safe_mode	7										
E24	uart2_tx	0	O	H	PU	7	VDDSHV	1.8V/3.3V	Yes	30	PU/ PD	LVCMOS
	mcbsp3_clkx	1	IO									
	gpt11_pwm_evt	2	IO									
	gpio_146	4	IO									
	safe_mode	7										
E23	uart2_rx	0	I	H	PU	7	VDDSHV	1.8V/3.3V	Yes	30	PU/ PD	LVCMOS
	mcbsp3_fsx	1	IO									
	gpt8_pwm_evt	2	IO									
	gpio_147	4	IO									
	safe_mode	7										
AA19	uart1_tx	0	O	L	PD	7	VDDSHV	1.8V/3.3V	Yes	30	PU/ PD	LVCMOS
	gpio_148	4	IO									
	safe_mode	7										
Y19	uart1_rts	0	O	L	PD	7	VDDSHV	1.8V/3.3V	Yes	30	PU/ PD	LVCMOS
	gpio_149	4	IO									
	safe_mode	7										
Y20	uart1_cts	0	I	L	PD	7	VDDSHV	1.8V/3.3V	Yes	30	PU/ PD	LVCMOS
	gpio_150	4	IO									
	safe_mode	7										
W20	uart1_rx	0	I	L	PD	7	VDDSHV	1.8V/3.3V	Yes	30	PU/ PD	LVCMOS
	mcbsp1_ clkr	2	I									
	mcspi4_clk	3	IO									
	gpio_151	4	IO									
	safe_mode	7										
B23	mcbsp4_clkx	0	IO	L	PD	7	VDDSHV	1.8V/3.3V	Yes	30	PU/ PD	LVCMOS
	gpio_152	4	IO									
	mm_fsusb3_txse0	6	IO									
	safe_mode	7										
A23	mcbsp4_dr	0	I	L	PD	7	VDDSHV	1.8V/3.3V	Yes	30	PU/ PD	LVCMOS
	gpio_153	4	IO									
	mm_fsusb3_rxrcv	6	IO									
	safe_mode	7										
B22	mcbsp4_dx	0	IO	L	PD	7	VDDSHV	1.8V/3.3V	Yes	30	PU/ PD	LVCMOS
	gpio_154	4	IO									
	mm_fsusb3_txdat	6	IO									
	safe_mode	7										
A22	mcbsp4_fsx	0	IO	L	PD	7	VDDSHV	1.8V/3.3V	Yes	30	PU/ PD	LVCMOS
	gpio_155	4	IO									
	mm_fsusb3_txen_ n	6	IO									
	safe_mode	7										
R25	mcbsp1_ clkr	0	IO	L	PD	7	VDDSHV	1.8V/3.3V	Yes	30	PU/ PD	LVCMOS
	mcspi4_clk	1	IO									
	gpio_156	4	IO									
	safe_mode	7										
P21	mcbsp1_fsr	0	IO	L	PD	7	VDDSHV	1.8V/3.3V	Yes	30	PU/ PD	LVCMOS

Copyright © 2009–2014, Texas Instruments Incorporated

Table 4-1. Ball Characteristics (ZCN Pkg.) (continued)

BALL LOCATION [1]	PIN NAME [2]	MODE [3]	TYPE [4]	BALL RESET STATE [5]	BALL RESET REL. STATE [6]	RESET REL. MODE [7]	POWER [8]	VOLTAGE [9]	HYS [10]	LOAD (pF) [11]	PULL U/D TYPE [12]	IO CELL [13]
	gpio_157	4	IO									
	safe_mode	7										
P22	mcbsp1_dx	0	IO	L	PD	7	VDDSHV	1.8V/3.3V	Yes	30	PU/ PD	LVCMOS
	mcspi4_ simo	1	IO									
	mcbsp3_dx	2	IO									
	gpio_158	4	IO									
	safe_mode	7										
P23	mcbsp1_dr	0	I	L	PD	7	VDDSHV	1.8V/3.3V	Yes	30	PU/ PD	LVCMOS
	mcspi4_ somi	1	IO									
	mcbsp3_dr	2	I									
	gpio_159	4	IO									
	safe_mode	7										
P25	mcbsp_clks	0	I	L	PD	7	VDDSHV	1.8V/3.3V	Yes	30	PU/ PD	LVCMOS
	gpio_160	4	IO									
	uart1_cts	5	I									
	safe_mode	7										
P24	mcbsp1_fsx	0	IO	L	PD	7	VDDSHV	1.8V/3.3V	Yes	30	PU/ PD	LVCMOS
	mcspi4_cs0	1	IO									
	mcbsp3_fsx	2	IO									
	gpio_161	4	IO									
	safe_mode	7										
N24	mcbsp1_ clkx	0	IO	L	PD	7	VDDSHV	1.8V/3.3V	Yes	30	PU/ PD	LVCMOS
	mcbsp3_ clkx	2	IO									
	gpio_162	4	IO									
	safe_mode	7										
N2	uart3_cts_ rctx	0	IO	H	PU	7	VDDSHV	1.8V/3.3V	Yes	30	PU/ PD	LVCMOS
	gpio_163	4	IO									
	safe_mode	7										
N3	uart3_rts_ sd	0	O	H	PU	7	VDDSHV	1.8V/3.3V	Yes	30	PU/ PD	LVCMOS
	gpio_164	4	IO									
	safe_mode	7										
P1	uart3_rx_ irrx	0	I	H	PU	7	VDDSHV	1.8V/3.3V	Yes	30	PU/ PD	LVCMOS
	gpio_165	4	IO									
	safe_mode	7										
P2	uart3_tx_ irtx	0	O	H	PU	7	VDDSHV	1.8V/3.3V	Yes	30	PU/ PD	LVCMOS
	gpio_166	4	IO									
	safe_mode	7										
F25	usb0_dp	0	IO					5.0V	Yes		PU/ PD	USB_PHY
	uart3_tx_ irtx	1	O									
F24	usb0_dm	0	IO					5.0V	Yes		PU/ PD	USB_PHY
	uart3_rx_ irrx	1	I									
G24	usb0_vbus	0	A				VDDA3P3V_ USBPHY	3.3V	Yes		PU/ PD	USB_PHY
G25	usb0_id	0	A				VDDA3P3V_ USBPHY	3.3V	Yes		PU/ PD	USB_PHY
E25	usb0_drvvbu s	0	O	L	PD	7	VDDSHV	1.8V/3.3V		30		LVCMOS
	uart3_tx_ irtx	2	O									
	gpio_125	4	IO									
	safe_mode	7										
V2	hecc1_ txd	0	O	H	PU	7	VDDSHV	1.8V/3.3V	Yes	24	PU/ PD	LVCMOS
	uart3_rx_ irrx	2	I									
	gpio_130	4	IO									

Copyright © 2009–2014, Texas Instruments Incorporated

Table 4-1. Ball Characteristics (ZCN Pkg.) (continued)

BALL LOCATION [1]	PIN NAME [2]	MODE [3]	TYPE [4]	BALL RESET STATE [5]	BALL RESET REL. STATE [6]	RESET REL. MODE [7]	POWER [8]	VOLTAGE [9]	HYS [10]	LOAD (pF) [11]	PULL U/D TYPE [12]	IO CELL [13]
	safe_mode	7										
V3	hecc1_ rxd	0	I	H	PU	7	VDDSHV	1.8V/3.3V	Yes	24	PU/ PD	LVCMOS
	uart3_rts_ sd	2	O									
	gpio_131	4	IO									
	safe_mode	7										
V4	i2c1_scl	0	IOD	H	PU	0	VDDSHV	1.8V/3.3V	Yes	40	PU/ PD	Open Drain
V5	i2c1_ sda	0	IOD	H	PU	0	VDDSHV	1.8V/3.3V	Yes	40	PU/ PD	Open Drain
W1	i2c2_scl	0	IOD	H	PU	7	VDDSHV	1.8V/3.3V	Yes	40	PU/ PD	Open Drain
	gpio_168	4	IO									
	safe_mode	7										
W2	i2c2_sda	0	IOD	H	PU	7	VDDSHV	1.8V/3.3V	Yes	40	PU/ PD	Open Drain
	gpio_183	4	IO									
	safe_mode	7										
W4	i2c3_scl	0	IOD	H	PU	7	VDDSHV	1.8V/3.3V	Yes	40	PU/ PD	Open Drain
	gpio_184	4	IO									
	safe_mode	7										
W5	i2c3_sda	0	IOD	H	PU	7	VDDSHV	1.8V/3.3V	Yes	40	PU/ PD	Open Drain
	gpio_185	4	IO									
	safe_mode	7										
L25	hdq_sio	0	IO	H	PU	7	VDDSHV	1.8V/3.3V	Yes	40	PU/ PD	LVCMOS
	sys_altclk	1	I									
	i2c2_sccbe	2	O									
	i2c3_sccbe	3	O									
	gpio_170	4	IO									
	safe_mode	7										
AE14	mcspi1_clk	0	IO	L	PD	7	VDDSHV	1.8V/3.3V	Yes	30	PU/ PD	LVCMOS
	mmc2_dat4	1	IO									
	gpio_171	4	IO									
	safe_mode	7										
AD15	mcspi1_ simo	0	IO	L	PD	7	VDDSHV	1.8V/3.3V	Yes	30	PU/ PD	LVCMOS
	mmc2_dat5	1	IO									
	gpio_172	4	IO									
	safe_mode	7										
AC15	mcspi1_ somi	0	IO	L	PD	7	VDDSHV	1.8V/3.3V	Yes	30	PU/ PD	LVCMOS
	mmc2_dat6	1	IO									
	gpio_173	4	IO									
	safe_mode	7										
AB15	mcspi1_cs0	0	IO	H	PU	7	VDDSHV	1.8V/3.3V	Yes	30	PU/ PD	LVCMOS
	mmc2_dat7	1	IO									
	gpio_174	4	IO									
	safe_mode	7										
AD14	mcspi1_cs1	0	O	H	PU	7	VDDSHV	1.8V/3.3V	Yes	30	PU/ PD	LVCMOS
	mmc3_cmd	3	IO									
	gpio_175	4	IO									
	safe_mode	7										
AE15	mcspi1_cs2	0	O	H	PU	7	VDDSHV	1.8V/3.3V	Yes	30	PU/ PD	LVCMOS
	mmc3_clk	3	O									
	gpio_176	4	IO									
	safe_mode	7										
AE16	mcspi1_cs3	0	O	H	PU	7	VDDSHV	1.8V/3.3V	Yes	30	PU/ PD	LVCMOS
	hsusb2_ data2	3	IO									
	gpio_177	4	IO									

Copyright © 2009–2014, Texas Instruments Incorporated

Table 4-1. Ball Characteristics (ZCN Pkg.) (continued)

BALL LOCATION [1]	PIN NAME [2]	MODE [3]	TYPE [4]	BALL RESET STATE [5]	BALL RESET REL. STATE [6]	RESET REL. MODE [7]	POWER [8]	VOLTAGE [9]	HYS [10]	LOAD (pF) [11]	PULL U/D TYPE [12]	IO CELL [13]
	mm_fsusb2_txdat	5	IO									
	safe_mode	7										
AD16	mcspi2_clk	0	IO	L	PD	7	VDDSHV	1.8V/3.3V	Yes	30	PU/ PD	LVCMOS
	hsusb2_data7	3	IO									
	gpio_178	4	IO									
	safe_mode	7										
AC16	mcspi2_simo	0	IO	L	PD	7	VDDSHV	1.8V/3.3V	Yes	30	PU/ PD	LVCMOS
	gpt9_pwm_evt	1	IO									
	hsusb2_data4	3	IO									
	gpio_179	4	IO									
	safe_mode	7										
AB16	mcspi2_somi	0	IO	L	PD	7	VDDSHV	1.8V/3.3V	Yes	30	PU/ PD	LVCMOS
	gpt10_pwm_evt	1	IO									
	hsusb2_data5	3	IO									
	gpio_180	4	IO									
	safe_mode	7										
AA16	mcspi2_cs0	0	IO	H	PU	7	VDDSHV	1.8V/3.3V	Yes	30	PU/ PD	LVCMOS
	gpt11_pwm_evt	1	IO									
	hsusb2_data6	3	IO									
	gpio_181	4	IO									
	safe_mode	7										
AE17	mcspi2_cs1	0	O	L	PD	7	VDDSHV	1.8V/3.3V	Yes	30	PU/ PD	LVCMOS
	gpt8_pwm_evt	1	IO									
	hsusb2_data3	3	IO									
	gpio_182	4	IO									
	mm_fsusb2_txen_n	5	IO									
	safe_mode	7										
K24	sys_32k	0	I	Z	Z	0	VDDSHV	1.8V/3.3V	Yes	30	PU/ PD	LVCMOS
K25	sys_xtalin	0	I	Z	Z	0	VDDSOSC	1.8V	NA		PU/ PD	LVCMOS
H25	sys_xtalout	0	O	Z	Z	0	VDDSOSC	1.8V	NA		PU/ PD	LVCMOS
M24	sys_clkreq	0	IO	L	Z	0	VDDSHV	1.8V/3.3V	Yes	30	PU/ PD	LVCMOS
	gpio_1	4	IO									
Y1	sys_nirq	0	I	H	PU	7	VDDSHV	1.8V/3.3V	Yes	30	PU/ PD	LVCMOS
	gpio_0	4	IO									
	safe_mode	7										
Y2	sys_nrespwron	0	I	Z	Z	0	VDDSHV	1.8V/3.3V	Yes	30	PU/ PD	LVCMOS
Y3	sys_nreswarm	0	IO	L	PD	0	VDDSHV	1.8V/3.3V	Yes	30	PU/ PD	LVCMOS
	gpio_30	4	IO									Open Drain
Y4	sys_boot0	0	I	Z	Z	0	VDDSHV	1.8V/3.3V	Yes	30	PU/ PD	LVCMOS
	gpio_2	4	IO									
AA1	sys_boot1	0	I	Z	Z	0	VDDSHV	1.8V/3.3V	Yes	30	PU/ PD	LVCMOS
	gpio_3	4	IO									
AA2	sys_boot2	0	I	Z	Z	0	VDDSHV	1.8V/3.3V	Yes	30	PU/ PD	LVCMOS
	gpio_4	4	IO									

Copyright © 2009–2014, Texas Instruments Incorporated

Table 4-1. Ball Characteristics (ZCN Pkg.) (continued)

BALL LOCATION [1]	PIN NAME [2]	MODE [3]	TYPE [4]	BALL RESET STATE [5]	BALL RESET REL. STATE [6]	RESET REL. MODE [7]	POWER [8]	VOLTAGE [9]	HYS [10]	LOAD (pF) [11]	PULL U/D TYPE [12]	IO CELL [13]
AA3	sys_boot3	0	I	Z	Z	0	VDDSHV	1.8V/3.3V	Yes	30	PU/ PD	LVCMOS
	gpio_5	4	IO									
AB1	sys_boot4	0	I	Z	Z	0	VDDSHV	1.8V/3.3V	Yes	30	PU/ PD	LVCMOS
	mmc2_dir_dat2	1	O									
	gpio_6	4	IO									
AB2	sys_boot5	0	I	Z	Z	0	VDDSHV	1.8V/3.3V	Yes	30	PU/ PD	LVCMOS
	mmc2_dir_dat3	1	O									
	gpio_7	4	IO									
AC1	sys_boot6	0	I	Z	Z	0	VDDSHV	1.8V/3.3V	Yes	30	PU/ PD	LVCMOS
	gpio_8	4	IO									
AC2	sys_boot7	0	I	Z	Z	0	VDDSHV	1.8V/3.3V	Yes	30	PU/PD	LVCMOS
AC3	sys_boot8	0	I	Z	Z	0	VDDSHV	1.8V/3.3V	Yes	30	PU/PD	LVCMOS
N25	sys_clkout1	0	O	H	PD	0/7 (1)	VDDSHV	1.8V/3.3V	Yes	30	PU/ PD	LVCMOS
	gpio_10	4	IO									
	safe_mode	7										
M25	sys_clkout2	0	O	L	PD	7	VDDSHV	1.8V/3.3V	Yes	10	PU/ PD	LVCMOS
	gpio_186	4	IO									
	safe_mode	7										
U24	jtag_ntrst	0	I	L	PD	0	VDDSHV	1.8V/3.3V	Yes	20	PU/ PD	LVCMOS
U25	jtag_tck	0	I	L	PD	0	VDDSHV	1.8V/3.3V	Yes	20	PU/ PD	LVCMOS
T21	jtag_rtck	0	O	L	Z	0	VDDSHV	1.8V/3.3V	Yes	20	PU/ PD	LVCMOS
T22	jtag_tms_tmsc	0	IO	H	PU	0	VDDSHV	1.8V/3.3V	Yes	20	PU/ PD	LVCMOS
T23	jtag_tdi	0	I	H	PU	0	VDDSHV	1.8V/3.3V	Yes	20	PU/ PD	LVCMOS
T24	jtag_tdo	0	O	L	Z	0	VDDSHV	1.8V/3.3V	Yes	20	PU/ PD	LVCMOS
T25	jtag_emu0	0	IO	H	PU	0	VDDSHV	1.8V/3.3V	Yes	20	PU/ PD	LVCMOS
	gpio_11	4	IO									
R24	jtag_emu1	0	IO	H	PU	0	VDDSHV	1.8V/3.3V	Yes	20	PU/ PD	LVCMOS
	gpio_31	4	IO									
AD17	etk_clk	0	O	H	PU	4	VDDSHV	1.8V/3.3V	Yes	9, 25	PU/ PD	LVCMOS
	mcbsp5_clkx	1	IO									
	mmc3_clk	2	O									
	hsusb1_stp	3	O									
	gpio_12	4	IO									
AE18	etk_ctl	0	O	H	PU	4	VDDSHV	1.8V/3.3V	Yes	9, 25	PU/ PD	LVCMOS
	mmc3_cmd	2	IO									
	hsusb1_clk	3	O									
	gpio_13	4	IO									
	mm_fsusb1_rxdp	5	IO									
AD18	etk_d0	0	O	H	PU	4	VDDSHV	1.8V/3.3V	Yes	9, 25	PU/ PD	LVCMOS
	mcspi3_simo	1	IO									
	mmc3_dat4	2	IO									
	hsusb1_data0	3	IO									
	gpio_14	4	IO									
	mm_fsusb1_rxrcv	5	IO									
AC18	etk_d1	0	O	H	PU	4	VDDSHV	1.8V/3.3V	Yes	9, 25	PU/ PD	LVCMOS
	mcspi3_somi	1	IO									
	hsusb1_data1	3	IO									

(1) Mux0 if sys_boot6 is pulled down (clock master).

Copyright © 2009–2014, Texas Instruments Incorporated

Table 4-1. Ball Characteristics (ZCN Pkg.) (continued)

BALL LOCATION [1]	PIN NAME [2]	MODE [3]	TYPE [4]	BALL RESET STATE [5]	BALL RESET REL. STATE [6]	RESET REL. MODE [7]	POWER [8]	VOLTAGE [9]	HYS [10]	LOAD (pF) [11]	PULL U/D TYPE [12]	IO CELL [13]
	gpio_15	4	IO									
	mm_fsusb1_txse0	5	IO									
AB18	etk_d2	0	O	H	PU	4	VDDSHV	1.8V/3.3V	Yes	9, 25	PU/ PD	LVCMOS
	mcspi3_cs0	1	IO									
	hsusb1_data2	3	IO									
	gpio_16	4	IO									
	mm_fsusb1_txdat	5	IO									
AA18	etk_d3	0	O	L	PU	4	VDDSHV	1.8V/3.3V	Yes	9, 25	PU/ PD	LVCMOS
	mcspi3_clk	1	IO									
	mmc3_dat3	2	IO									
	hsusb1_data7	3	IO									
	gpio_17	4	IO									
Y18	etk_d4	0	O	L	PD	4	VDDSHV	1.8V/3.3V	Yes	9, 25	PU/ PD	LVCMOS
	mcbsp5_dr	1	I									
	mmc3_dat0	2	IO									
	hsusb1_data4	3	IO									
	gpio_18	4	IO									
AE19	etk_d5	0	O	L	PD	4	VDDSHV	1.8V/3.3V	Yes	9, 25	PU/ PD	LVCMOS
	mcbsp5_fsx	1	IO									
	mmc3_dat1	2	IO									
	hsusb1_data5	3	IO									
	gpio_19	4	IO									
AD19	etk_d6	0	O	L	PD	4	VDDSHV	1.8V/3.3V	Yes	9, 25	PU/ PD	LVCMOS
	mcbsp5_dx	1	IO									
	mmc3_dat2	2	IO									
	hsusb1_data6	3	IO									
	gpio_20	4	IO									
AB19	etk_d7	0	O	L	PD	4	VDDSHV	1.8V/3.3V	Yes	9, 25	PU/ PD	LVCMOS
	mcspi3_cs1	1	O									
	mmc3_dat7	2	IO									
	hsusb1_data3	3	IO									
	gpio_21	4	IO									
	mm_fsusb1_txen_n	5	IO									
AE20	etk_d8	0	O	L	PD	4	VDDSHV	1.8V/3.3V	Yes	9, 25	PU/ PD	LVCMOS
	mmc3_dat6	2	IO									
	hsusb1_dir	3	I									
	gpio_22	4	IO									
AD20	etk_d9	0	O	L	PD	4	VDDSHV	1.8V/3.3V	Yes	9, 25	PU/ PD	LVCMOS
	mmc3_dat5	2	IO									
	hsusb1_nxt	3	I									
	gpio_23	4	IO									
	mm_fsusb1_rxdm	5	IO									
AC20	etk_d10	0	O	L	PD	4	VDDSHV	1.8V/3.3V	Yes	9, 25	PU/ PD	LVCMOS
	uart1_rx	2	I									
	hsusb2_clk	3	O									
	gpio_24	4	IO									
AB20	etk_d11	0	O	L	PD	4	VDDSHV	1.8V/3.3V	Yes	9, 25	PU/ PD	LVCMOS
	mcspi3_clk	1	IO									

Copyright © 2009–2014, Texas Instruments Incorporated

Table 4-1. Ball Characteristics (ZCN Pkg.) (continued)

BALL LOCATION [1]	PIN NAME [2]	MODE [3]	TYPE [4]	BALL RESET STATE [5]	BALL RESET REL. STATE [6]	RESET REL. MODE [7]	POWER [8]	VOLTAGE [9]	HYS [10]	LOAD (pF) [11]	PULL U/D TYPE [12]	IO CELL [13]
	hsusb2_stp	3	O									
	gpio_25	4	IO									
	mm_fsusb2_rxdp	5	IO									
AE21	etk_d12	0	O	L	PD	4	VDDSHV	1.8V/3.3V	Yes	9, 25	PU/ PD	LVCMOS
	hsusb2_dir	3	I									
	gpio_26	4	IO									
AD21	etk_d13	0	O	L	PD	4	VDDSHV	1.8V/3.3V	Yes	9, 25	PU/ PD	LVCMOS
	hsusb2_nxt	3	I									
	gpio_27	4	IO									
	mm_fsusb2_rxdm	5	IO									
AC21	etk_d14	0	O	L	PD	4	VDDSHV	1.8V/3.3V	Yes	9, 25	PU/ PD	LVCMOS
	hsusb2_data0	3	IO									
	gpio_28	4	IO									
	mm_fsusb2_rxrcv	5	IO									
AE22	etk_d15	0	O	L	PD	4	VDDSHV	1.8V/3.3V	Yes	9, 25	PU/ PD	LVCMOS
	hsusb2_data1	3	IO									
	gpio_29	4	IO									
	mm_fsusb2_txse0	5	IO									
V16, V15, V11, V10, U16, U15, U11, U10, T18, T17, T9, T8, R18, R17, R9, R8, M18, L18, L9, L8, K18, K17, K9, K8, J16, J15, J11, J10, H15, H11, H10	VDD_CORE	0	PWR					1.2V				
AA13	VDDS_SRAM_MPU	0	PWR					1.8V				
E17	VDDS_SRAM_CORE_BG	0	PWR					1.8V				
AA12	CAP_VDD_SRAM_MPU	0	PWR					1.2V				
E16	CAP_VDD_SRAM_CORE	0	PWR					1.2V				
AA15	VDDS_DPLL_MPU_USBHOST	0	PWR					1.8V				
N20	VDDS_DPLL_PER_CORE	0	PWR					1.8V				
H21	VDDA_DAC	0	PWR					1.8V				
F23	VDDA3P3V_USBPHY	0	PWR					3.3V				
G22	VDDA1P8V_USBPHY	0	PWR					1.8V				
F22	CAP_VDDA1P2LDO_USBPHY	0	PWR					1.2V				

Copyright © 2009–2014, Texas Instruments Incorporated

Table 4-1. Ball Characteristics (ZCN Pkg.) (continued)

BALL LOCATION [1]	PIN NAME [2]	MODE [3]	TYPE [4]	BALL RESET STATE [5]	BALL RESET REL. STATE [6]	RESET REL. MODE [7]	POWER [8]	VOLTAGE [9]	HYS [10]	LOAD (pF) [11]	PULL U/D TYPE [12]	IO CELL [13]
Y16, Y15, Y13, Y12, Y10, W16, W15, W13, W12,W10, W9, W6, V7, V6, U19, T20, T19, T7, T6, R7, R6, P20, P19, N19, N7, N6, M7, M6, M5, L19, K19, K7, K6, K5, J7, H18, H17	VDDSHV	0	PWR					1.8V/3.3V				
Y9, W18, U20, R5, N22, H16, H8, G17, G16, G14, G13, G11, G10, G8, F16, F13, F11, F10, F8	VDDS	0	PWR					1.8V				
F14	VREFSSTL	0	I									
L20	VDDSOSC	0	PWR					1.8V				
J25	VSSOSC	O	GND					1.8V				
AE25, AE1, V18, V17, V14, V13, V12, V9, V8, U18, U17, U14, U13, U12, U9, U8, T14, T13, T12, R16, R15, R14, R13, R12, R11, R10, P18, P17, P16, P15, P14, P13, P12, P11, P10, P9, P8, N18, N17, N14, N13, N12, N9, N8, M17, M16, M15, M14, M13,M12, M11, M10, M9, M8, L17, L16, L15, L14, L13, L12, L11, L10, K14, K13, K12, J18, J17, J14, J13, J12, J9, J8, H14, H13, H12, H9, A25, A1, N23, G20, G21	VSS	0	GND									
H22	VSSA_DAC	0	GND									
L24, L23, L22, L21, K23, K22, H19, N21,F17	NC(2)											
U2(3)	Reserved											
V1(3)	Reserved											

(2) "NC" indicates "No Connect". For proper device operation, these pins ***must be*** left unconnected.
(3) For proper device operation, this pin ***must be*** pulled up to VDDSHV via a 10k-Ω resistor.

Copyright © 2009–2014, Texas Instruments Incorporated

Table 4-2. Ball Characteristics (ZER Pkg.)

BALL LOCATION [1]	PIN NAME [2]	MODE [3]	TYPE [4]	BALL RESET STATE [5]	BALL RESET REL. STATE [6]	RESET REL. MODE [7]	POWER [8]	VOLTAGE [9]	HYS [10]	LOAD (pF) [11]	PULL U/D TYPE [12]	IO CELL [13]
E3	sdrc_d0	0	IO	L	Z	0	VDDS	1.8V	Yes	4	PU/ PD	LVCMOS
D3	sdrc_d1	0	IO	L	Z	0	VDDS	1.8V	Yes	4	PU/ PD	LVCMOS
C3	sdrc_d2	0	IO	L	Z	0	VDDS	1.8V	Yes	4	PU/ PD	LVCMOS
C2	sdrc_d3	0	IO	L	Z	0	VDDS	1.8V	Yes	4	PU/ PD	LVCMOS
F3	sdrc_d4	0	IO	L	Z	0	VDDS	1.8V	Yes	4	PU/ PD	LVCMOS
D2	sdrc_d5	0	IO	L	Z	0	VDDS	1.8V	Yes	4	PU/ PD	LVCMOS
C1	sdrc_d6	0	IO	L	Z	0	VDDS	1.8V	Yes	4	PU/ PD	LVCMOS
D1	sdrc_d7	0	IO	L	Z	0	VDDS	1.8V	Yes	4	PU/ PD	LVCMOS
G2	sdrc_d8	0	IO	L	Z	0	VDDS	1.8V	Yes	4	PU/ PD	LVCMOS
G3	sdrc_d9	0	IO	L	Z	0	VDDS	1.8V	Yes	4	PU/ PD	LVCMOS
H3	sdrc_d10	0	IO	L	Z	0	VDDS	1.8V	Yes	4	PU/ PD	LVCMOS
G4	sdrc_d11	0	IO	L	Z	0	VDDS	1.8V	Yes	4	PU/ PD	LVCMOS
H4	sdrc_d12	0	IO	L	Z	0	VDDS	1.8V	Yes	4	PU/ PD	LVCMOS
G1	sdrc_d13	0	IO	L	Z	0	VDDS	1.8V	Yes	4	PU/ PD	LVCMOS
J3	sdrc_d14	0	IO	L	Z	0	VDDS	1.8V	Yes	4	PU/ PD	LVCMOS
J1	sdrc_d15	0	IO	L	Z	0	VDDS	1.8V	Yes	4	PU/ PD	LVCMOS
T3	sdrc_d16	0	IO	L	Z	0	VDDS	1.8V	Yes	4	PU/ PD	LVCMOS
U3	sdrc_d17	0	IO	L	Z	0	VDDS	1.8V	Yes	4	PU/ PD	LVCMOS
U4	sdrc_d18	0	IO	L	Z	0	VDDS	1.8V	Yes	4	PU/ PD	LVCMOS
V4	sdrc_d19	0	IO	L	Z	0	VDDS	1.8V	Yes	4	PU/ PD	LVCMOS
V1	sdrc_d20	0	IO	L	Z	0	VDDS	1.8V	Yes	4	PU/ PD	LVCMOS
V2	sdrc_d21	0	IO	L	Z	0	VDDS	1.8V	Yes	4	PU/ PD	LVCMOS
V5	sdrc_d22	0	IO	L	Z	0	VDDS	1.8V	Yes	4	PU/ PD	LVCMOS
V3	sdrc_d23	0	IO	L	Z	0	VDDS	1.8V	Yes	4	PU/ PD	LVCMOS
W3	sdrc_d24	0	IO	L	Z	0	VDDS	1.8V	Yes	4	PU/ PD	LVCMOS
W4	sdrc_d25	0	IO	L	Z	0	VDDS	1.8V	Yes	4	PU/ PD	LVCMOS
Y3	sdrc_d26	0	IO	L	Z	0	VDDS	1.8V	Yes	4	PU/ PD	LVCMOS
Y4	sdrc_d27	0	IO	L	Z	0	VDDS	1.8V	Yes	4	PU/ PD	LVCMOS
AA2	sdrc_d28	0	IO	L	Z	0	VDDS	1.8V	Yes	4	PU/ PD	LVCMOS
AA3	sdrc_d29	0	IO	L	Z	0	VDDS	1.8V	Yes	4	PU/ PD	LVCMOS
AA4	sdrc_d30	0	IO	L	Z	0	VDDS	1.8V	Yes	4	PU/ PD	LVCMOS
AB2	sdrc_d31	0	IO	L	Z	0	VDDS	1.8V	Yes	4	PU/ PD	LVCMOS
L4	sdrc_ba0	0	O	L	Z	0	VDDS	1.8V	No	8	PU/ PD	LVCMOS
K5	sdrc_ba1	0	O	L	Z	0	VDDS	1.8V	No	8	PU/ PD	LVCMOS
J5	sdrc_ba2	0	O	L	Z	0	VDDS	1.8V	No	8	PU/ PD	LVCMOS
M3	sdrc_a0	0	O	L	Z	0	VDDS	1.8V	No	8	PU/ PD	LVCMOS
M4	sdrc_a1	0	O	L	Z	0	VDDS	1.8V	No	8	PU/ PD	LVCMOS
M5	sdrc_a2	0	O	L	Z	0	VDDS	1.8V	No	8	PU/ PD	LVCMOS
N3	sdrc_a3	0	O	L	Z	0	VDDS	1.8V	No	8	PU/ PD	LVCMOS
N2	sdrc_a4	0	O	L	Z	0	VDDS	1.8V	No	8	PU/ PD	LVCMOS
N4	sdrc_a5	0	O	L	Z	0	VDDS	1.8V	No	8	PU/ PD	LVCMOS
P3	sdrc_a6	0	O	L	Z	0	VDDS	1.8V	No	8	PU/ PD	LVCMOS
P2	sdrc_a7	0	O	L	Z	0	VDDS	1.8V	No	8	PU/ PD	LVCMOS
P1	sdrc_a8	0	O	L	Z	0	VDDS	1.8V	No	8	PU/ PD	LVCMOS
P4	sdrc_a9	0	O	L	Z	0	VDDS	1.8V	No	8	PU/ PD	LVCMOS
R1	sdrc_a10	0	O	L	Z	0	VDDS	1.8V	No	8	PU/ PD	LVCMOS
R2	sdrc_a11	0	O	L	Z	0	VDDS	1.8V	No	8	PU/ PD	LVCMOS
R3	sdrc_a12	0	O	L	Z	0	VDDS	1.8V	No	8	PU/ PD	LVCMOS
R4	sdrc_a13	0	O	L	Z	0	VDDS	1.8V	No	8	PU/ PD	LVCMOS
T2	sdrc_a14	0	O	L	Z	0	VDDS	1.8V	No	8	PU/ PD	LVCMOS
J4	sdrc_ncs0	0	O	L	Z	0	VDDS	1.8V	No	8	PU/ PD	LVCMOS
K4	sdrc_ncs1	0	O	L	Z	0	VDDS	1.8V	No	8	PU/ PD	LVCMOS
L1	sdrc_clk	0	O	L	Z	0	VDDS	1.8V	Yes	8	PU/ PD	LVCMOS
L2	sdrc_nclk	0	O	L	Z	0	VDDS	1.8V	No	8	PU/ PD	LVCMOS

Copyright © 2009–2014, Texas Instruments Incorporated

Table 4-2. Ball Characteristics (ZER Pkg.) (continued)

BALL LOCATION [1]	PIN NAME [2]	MODE [3]	TYPE [4]	BALL RESET STATE [5]	BALL RESET REL. STATE [6]	RESET REL. MODE [7]	POWER [8]	VOLTAGE [9]	HYS [10]	LOAD (pF) [11]	PULL U/D TYPE [12]	IO CELL [13]
K3	sdrc_cke0	0	O	L	PD	7	VDDS	1.8V	Yes	8	PU/ PD	LVCMOS
	sdrc_cke0_safe	7	I									
K1	sdrc_nras	0	O	L	Z	0	VDDS	1.8V	No	8	PU/ PD	LVCMOS
L3	sdrc_ncas	0	O	L	Z	0	VDDS	1.8V	No	8	PU/ PD	LVCMOS
K2	sdrc_nwe	0	O	L	Z	0	VDDS	1.8V	No	8	PU/ PD	LVCMOS
F4	sdrc_dm0	0	O	L	Z	0	VDDS	1.8V	No	8	PU/ PD	LVCMOS
J2	sdrc_dm1	0	O	L	Z	0	VDDS	1.8V	No	8	PU/ PD	LVCMOS
T4	sdrc_dm2	0	O	L	Z	0	VDDS	1.8V	No	8	PU/ PD	LVCMOS
AB3	sdrc_dm3	0	O	L	Z	0	VDDS	1.8V	No	8	PU/ PD	LVCMOS
E2	sdrc_dqs0p	0	IO	L	Z	0	VDDS	1.8V	Yes	8	PU/ PD	LVCMOS
H2	sdrc_dqs1p	0	IO	L	Z	0	VDDS	1.8V	Yes	8	PU/ PD	LVCMOS
U1	sdrc_dqs2p	0	IO	L	Z	0	VDDS	1.8V	Yes	8	PU/ PD	LVCMOS
Y1	sdrc_dqs3p	0	IO	L	Z	0	VDDS	1.8V	Yes	8	PU/ PD	LVCMOS
E1	sdrc_dqs0n	0	IO	L	Z	0	VDDS	1.8V		8	PU/ PD	LVCMOS
H1	sdrc_dqs1n	0	IO	L	Z	0	VDDS	1.8V		8	PU/ PD	LVCMOS
U2	sdrc_dqs2n	0	IO	L	Z	0	VDDS	1.8V		8	PU/ PD	LVCMOS
Y2	sdrc_dqs3n	0	IO	L	Z	0	VDDS	1.8V		8	PU/ PD	LVCMOS
T1	sdrc_odt	0		L	Z	0	VDDS	1.8V		8	PU/ PD	LVCMOS
F2	sdrc_strben0	0		L	Z	0	VDDS	1.8V		8	PU/ PD	LVCMOS
F1	sdrc_strben_dly0	0		L	Z	0	VDDS	1.8V		8	PU/ PD	LVCMOS
W1	sdrc_strben1	0		L	Z	0	VDDS	1.8V		8	PU/ PD	LVCMOS
W2	sdrc_strben_dly1	0		L	Z	0	VDDS	1.8V		8	PU/ PD	LVCMOS
W5	gpmc_a1	0	O	L	PD	7	VDDSHV	1.8V/3.3V	Yes	30	PU/ PD	LVCMOS
	gpio_34	4	IO									
Y5	gpmc_a2	0	O	L	PD	7	VDDSHV	1.8V/3.3V	Yes	30	PU/ PD	LVCMOS
	gpio_35	4	IO									
AB4	gpmc_a3	0	O	L	PD	7	VDDSHV	1.8V/3.3V	Yes	30	PU/ PD	LVCMOS
	gpio_36	4	IO									
AA5	gpmc_a4	0	O	L	PD	7	VDDSHV	1.8V/3.3V	Yes	30	PU/ PD	LVCMOS
	gpio_37	4	IO									
AB5	gpmc_a5	0	O	L	PD	7	VDDSHV	1.8V/3.3V	Yes	30	PU/ PD	LVCMOS
	gpio_38	4	IO									
AB6	gpmc_a6	0	O	H	PU	7	VDDSHV	1.8V/3.3V	Yes	30	PU/ PD	LVCMOS
	gpio_39	4	IO									
AA6	gpmc_a7	0	O	H	PU	7	VDDSHV	1.8V/3.3V	Yes	30	PU/ PD	LVCMOS
	gpio_40	4	IO									
W6	gpmc_a8	0	O	H	PU	7	VDDSHV	1.8V/3.3V	Yes	30	PU/ PD	LVCMOS
	gpio_41	4	IO									
AB7	gpmc_a9	0	O	H	PU	7	VDDSHV	1.8V/3.3V	Yes	30	PU/ PD	LVCMOS
	sys_ndmareq2	1	I									
	gpio_42	4	IO									
Y6	gpmc_a10	0	O	H	PU	7	VDDSHV	1.8V/3.3V	Yes	30	PU/ PD	LVCMOS
	sys_ndmareq3	1	I									
	gpio_43	4	IO									
AA7	gpmc_d0	0	IO	H	PU	0	VDDSHV	1.8V/3.3V		30	PU/ PD	LVCMOS
Y7	gpmc_d1	0	IO	H	PU	0	VDDSHV	1.8V/3.3V	Yes	30	PU/ PD	LVCMOS
W7	gpmc_d2	0	IO	H	PU	0	VDDSHV	1.8V/3.3V	Yes	30	PU/ PD	LVCMOS
AA9	gpmc_d3	0	IO	H	PU	0	VDDSHV	1.8V/3.3V	Yes	30	PU/ PD	LVCMOS
Y8	gpmc_d4	0	IO	H	PU	0	VDDSHV	1.8V/3.3V	Yes	30	PU/ PD	LVCMOS
AA8	gpmc_d5	0	IO	H	PU	0	VDDSHV	1.8V/3.3V	Yes	30	PU/ PD	LVCMOS
AB8	gpmc_d6	0	IO	H	PU	0	VDDSHV	1.8V/3.3V	Yes	30	PU/ PD	LVCMOS
W8	gpmc_d7	0	IO	H	PU	0	VDDSHV	1.8V/3.3V	Yes	30	PU/ PD	LVCMOS

Copyright © 2009–2014, Texas Instruments Incorporated

Table 4-2. Ball Characteristics (ZER Pkg.) (continued)

BALL LOCATION [1]	PIN NAME [2]	MODE [3]	TYPE [4]	BALL RESET STATE [5]	BALL RESET REL. STATE [6]	RESET REL. MODE [7]	POWER [8]	VOLTAGE [9]	HYS [10]	LOAD (pF) [11]	PULL U/D TYPE [12]	IO CELL [13]
W10	gpmc_d8	0	IO	H	PU	0	VDDSHV	1.8V/3.3V	Yes	30	PU/ PD	LVCMOS
	gpio_44	4	IO									
AB9	gpmc_d9	0	IO	H	PU	0	VDDSHV	1.8V/3.3V	Yes	30	PU/ PD	LVCMOS
	gpio_45	4	IO									
AB10	gpmc_d10	0	IO	H	PU	0	VDDSHV	1.8V/3.3V	Yes	30	PU/ PD	LVCMOS
	gpio_46	4	IO									
W9	gpmc_d11	0	IO	H	PU	0	VDDSHV	1.8V/3.3V	Yes	30	PU/ PD	LVCMOS
	gpio_47	4	IO									
AA10	gpmc_d12	0	IO	H	PU	0	VDDSHV	1.8V/3.3V	Yes	30	PU/ PD	LVCMOS
	gpio_48	4	IO									
Y9	gpmc_d13	0	IO	H	PU	0	VDDSHV	1.8V/3.3V	Yes	30	PU/ PD	LVCMOS
	gpio_49	4	IO									
V10	gpmc_d14	0	IO	H	PU	0	VDDSHV	1.8V/3.3V	Yes	30	PU/ PD	LVCMOS
	gpio_50	4	IO									
V9	gpmc_d15	0	IO	H	PU	0	VDDSHV	1.8V/3.3V	Yes	30	PU/ PD	LVCMOS
	gpio_51	4	IO									
Y10	gpmc_ncs0	0	O	H	Z	0	VDDSHV	1.8V/3.3V	No	30	NA	LVCMOS
Y11	gpmc_ncs1	0	O	H	Z	0	VDDSHV	1.8V/3.3V	Yes	30	PU/ PD	LVCMOS
	gpio_52	4	IO									
Y12	gpmc_ncs2	0	O	H	PU	7	VDDSHV	1.8V/3.3V	Yes	30	PU/ PD	LVCMOS
	gpt9_pwm_evt	2	IO									
	gpio_53	4	IO									
V12	gpmc_ncs3	0	O	H	PU	7	VDDSHV	1.8V/3.3V	Yes	30	PU/ PD	LVCMOS
	sys_ndmareq0	1	I									
	gpt10_pwm_evt	2	IO									
	gpio_54	4	IO									
AA11	gpmc_ncs4	0	O	H	PU	7	VDDSHV	1.8V/3.3V	Yes	30	PU/ PD	LVCMOS
	sys_ndmareq1	1	I									
	gpt9_pwm_evt	3	IO									
	gpio_55	4	IO									
W12	gpmc_ncs5	0	O	H	PU	7	VDDSHV	1.8V/3.3V	Yes	30	PU/ PD	LVCMOS
	sys_ndmareq2	1	I									
	gpt10_pwm_evt	3	IO									
	gpio_56	4	IO									
AA12	gpmc_ncs6	0	O	H	PU	7	VDDSHV	1.8V/3.3V	Yes	30	PU/ PD	LVCMOS
	sys_ndmareq3	1	I									
	gpt11_pwm_evt	3	IO									
	gpio_57	4	IO									
V11	gpmc_ncs7	0	O	H	PU	7	VDDSHV	1.8V/3.3V	Yes	30	PU/ PD	LVCMOS
	gpmc_io_dir	1	O									
	gpt8_pwm_evt	3	IO									
	gpio_58	4	IO									
AB13	gpmc_clk	0	O	L	Z	0	VDDSHV	1.8V/3.3V	Yes	30	PU/ PD	LVCMOS
	gpio_59	4	IO									
AA14	gpmc_nadv_ale	0	O	L	Z	0	VDDSHV	1.8V/3.3V	No	30	PU/ PD	LVCMOS
AB14	gpmc_noe	0	O	H	Z	0	VDDSHV	1.8V/3.3V	No	30	PU/ PD	LVCMOS
AA15	gpmc_nwe	0	O	H	Z	0	VDDSHV	1.8V/3.3V	No	30	PU/ PD	LVCMOS

Copyright © 2009–2014, Texas Instruments Incorporated

Table 4-2. Ball Characteristics (ZER Pkg.) (continued)

BALL LOCATION [1]	PIN NAME [2]	MODE [3]	TYPE [4]	BALL RESET STATE [5]	BALL RESET REL. STATE [6]	RESET REL. MODE [7]	POWER [8]	VOLTAGE [9]	HYS [10]	LOAD (pF) [11]	PULL U/D TYPE [12]	IO CELL [13]
W11	gpmc_nbe0_cle	0	O	L	Z	0	VDDSHV	1.8V/3.3V	Yes	30	PU/ PD	LVCMOS
	gpio_60	4	IO									
Y15	gpmc_nbe1	0	O	L	PD	7	VDDSHV	1.8V/3.3V	Yes	30	PU/ PD	LVCMOS
	gpio_61	4	IO									
W14	gpmc_nwp	0	O	L	Z	0	VDDSHV	1.8V/3.3V	Yes	30	PU/ PD	LVCMOS
	gpio_62	4	IO									
V13	gpmc_wait0	0	I	H	PU	0	VDDSHV	1.8V/3.3V	Yes	30	PU/ PD	LVCMOS
AA16	gpmc_wait1	0	I	H	PU	7	VDDSHV	1.8V/3.3V	Yes	30	PU/ PD	LVCMOS
	uart4_tx	1	O									
	gpio_63	4	IO									
Y14	gpmc_wait2	0	I	H	PU	7	VDDSHV	1.8V/3.3V	Yes	30	PU/ PD	LVCMOS
	uart4_rx	1	I									
	gpio_64	4	IO									
V14	gpmc_wait3	0	I	H	PU	7	VDDSHV	1.8V/3.3V	Yes	30	PU/ PD	LVCMOS
	sys_ndmareq1	1	I									
	uart3_cts_rctx	2	I									
	gpio_65	4	IO									
B22	dss_pclk	0	O	H	PU	7	VDDSHV	1.8V/3.3V	Yes	20	PU/ PD	LVCMOS
	gpio_66	4	IO									
	hw_dbg12	5	O									
B21	dss_hsync	0	O	H	PU	7	VDDSHV	1.8V/3.3V	Yes	20	PU/ PD	LVCMOS
	gpio_67	4	IO									
	hw_dbg13	5	O									
B20	dss_vsync	0	O	H	PU	7	VDDSHV	1.8V/3.3V	Yes	20	PU/ PD	LVCMOS
	gpio_68	4	IO									
B19	dss_acbias	0	O	L	PD	7	VDDSHV	1.8V/3.3V	Yes	20	PU/ PD	LVCMOS
	gpio_69	4	IO									
A20	dss_data0	0	O	L	PD	7	VDDSHV	1.8V/3.3V	Yes	20	PU/ PD	LVCMOS
	uart1_cts	2	I									
	gpio_70	4	IO									
A19	dss_data1	0	O	L	PD	7	VDDSHV	1.8V/3.3V	Yes	20	PU/ PD	LVCMOS
	uart1_rts	2	O									
	gpio_71	4	IO									
A18	dss_data2	0	O	L	PD	7	VDDSHV	1.8V/3.3V	Yes	20	PU/ PD	LVCMOS
	gpio_72	4	IO									
B18	dss_data3	0	O	L	PD	7	VDDSHV	1.8V/3.3V	Yes	20	PU/ PD	LVCMOS
	gpio_73	4	IO									
A17	dss_data4	0	O	L	PD	7	VDDSHV	1.8V/3.3V	Yes	20	PU/ PD	LVCMOS
	uart3_rx_irrx	2	I									
	gpio_74	4	IO									
C18	dss_data5	0	O	L	PD	7	VDDSHV	1.8V/3.3V	Yes	20	PU/ PD	LVCMOS
	uart3_tx_irtx	2	O									
	gpio_75	4	IO									
D17	dss_data6	0	O	L	PD	7	VDDSHV	1.8V/3.3V	Yes	20	PU/ PD	LVCMOS
	uart1_tx	2	O									
	gpio_76	4	IO									
	hw_dbg14	5	O									
B16	dss_data7	0	O	L	PD	7	VDDSHV	1.8V/3.3V	Yes	20	PU/ PD	LVCMOS
	uart1_rx	2	I									
	gpio_77	4	IO									
	hw_dbg15	5	O									
B17	dss_data8	0	O	L	PD	7	VDDSHV	1.8V/3.3V	Yes	20	PU/ PD	LVCMOS
	gpio_78	4	IO									

Copyright © 2009–2014, Texas Instruments Incorporated

Table 4-2. Ball Characteristics (ZER Pkg.) (continued)

BALL LOCATION [1]	PIN NAME [2]	MODE [3]	TYPE [4]	BALL RESET STATE [5]	BALL RESET REL. STATE [6]	RESET REL. MODE [7]	POWER [8]	VOLTAGE [9]	HYS [10]	LOAD (pF) [11]	PULL U/D TYPE [12]	IO CELL [13]
	hw_dbg16	5	O									
C17	dss_data9	0	O	L	PD	7	VDDSHV	1.8V/3.3V	Yes	20	PU/ PD	LVCMOS
	gpio_79	4	IO									
	hw_dbg17	5	O									
C16	dss_data10	0	O	L	PD	7	VDDSHV	1.8V/3.3V	Yes	20	PU/ PD	LVCMOS
	gpio_80	4	IO									
D16	dss_data11	0	O	L	PD	7	VDDSHV	1.8V/3.3V	Yes	20	PU/ PD	LVCMOS
	gpio_81	4	IO									
D14	dss_data12	0	O	L	PD	7	VDDSHV	1.8V/3.3V	Yes	20	PU/ PD	LVCMOS
	gpio_82	4	IO									
A16	dss_data13	0	O	L	PD	7	VDDSHV	1.8V/3.3V	Yes	20	PU/ PD	LVCMOS
	gpio_83	4	IO									
D15	dss_data14	0	O	L	PD	7	VDDSHV	1.8V/3.3V	Yes	20	PU/ PD	LVCMOS
	gpio_84	4	IO									
B15	dss_data15	0	O	L	PD	7	VDDSHV	1.8V/3.3V	Yes	20	PU/ PD	LVCMOS
	gpio_85	4	IO									
A15	dss_data16	0	O	L	PD	7	VDDSHV	1.8V/3.3V	Yes	20	PU/ PD	LVCMOS
	gpio_86	4	IO									
A14	dss_data17	0	O	L	PD	7	VDDSHV	1.8V/3.3V	Yes	20	PU/ PD	LVCMOS
	gpio_87	4	IO									
C13	dss_data18	0	O	L	PD	7	VDDSHV	1.8V/3.3V	Yes	20	PU/ PD	LVCMOS
	mcspi3_clk	2	IO									
	dss_data4	3	O									
	gpio_88	4	IO									
C15	dss_data19	0	O	L	PD	7	VDDSHV	1.8V/3.3V	Yes	20	PU/ PD	LVCMOS
	mcspi3_ simo	2	IO									
	dss_data3	3	O									
	gpio_89	4	IO									
A13	dss_data20	0	O	L	PD	7	VDDSHV	1.8V/3.3V	Yes	20	PU/ PD	LVCMOS
	mcspi3_ somi	2	IO									
	dss_data2	3	O									
	gpio_90	4	IO									
B13	dss_data21	0	O	L	PD	7	VDDSHV	1.8V/3.3V	Yes	20	PU/ PD	LVCMOS
	mcspi3_cs0	2	IO									
	dss_data1	3	O									
	gpio_91	4	IO									
C14	dss_data22	0	O	L	PD	7	VDDSHV	1.8V/3.3V	Yes	20	PU/ PD	LVCMOS
	mcspi3_cs1	2	O									
	gpio_92	4	IO									
B14	dss_data23	0	O	L	PD	7	VDDSHV	1.8V/3.3V	Yes	20	PU/ PD	LVCMOS
	dss_data5	3	O									
	gpio_93	4	IO									
AB21	ccdc_pclk	0	IO	L	PD	7	VDDSHV	1.8V/3.3V	Yes	15	PU/ PD	LVCMOS
	gpio_94	4	IO									
	hw_dbg0	5	O									
AA21	ccdc_field	0	IO	L	PD	7	VDDSHV	1.8V/3.3V	Yes	15	PU/ PD	LVCMOS
	ccdc_data8	1	I									
	uart4_tx	2	O									
	i2c3_scl	3	IO									
	gpio_95	4	IO									
	hw_dbg1	5	O									
Y21	ccdc_ hd	0	IO	L	PD	7	VDDSHV	1.8V/3.3V	Yes	15	PU/ PD	LVCMOS
	uart4_rts	2	O									

Copyright © 2009–2014, Texas Instruments Incorporated

Table 4-2. Ball Characteristics (ZER Pkg.) (continued)

BALL LOCATION [1]	PIN NAME [2]	MODE [3]	TYPE [4]	BALL RESET STATE [5]	BALL RESET REL. STATE [6]	RESET REL. MODE [7]	POWER [8]	VOLTAGE [9]	HYS [10]	LOAD (pF) [11]	PULL U/D TYPE [12]	IO CELL [13]
	gpio_96	4	IO									
Y22	ccdc_vd	0	IO	L	PD	7	VDDSHV	1.8V/3.3V	Yes	15	PU/ PD	LVCMOS
	uart4_cts	2	I									
	gpio_97	4	IO									
	hw_dbg2	5	O									
W21	ccdc_wen	0	IO	L	PD	7	VDDSHV	1.8V/3.3V	Yes	15	PU/PD	LVCMOS
	ccdc_data9	1	I									
	uart4_rx	2	I									
	gpio_98	4	IO									
	hw_dbg3	5	O									
W22	ccdc_data0	0	I	L	PD	7	VDDSHV	1.8V/3.3V	Yes	15	PU/PD	LVCMOS
	i2c3_sda	3	IO									
	gpio_99	4	I									
W20	ccdc_data1	0	I	L	PD	7	VDDSHV	1.8V/3.3V	Yes	15	PU/PD	LVCMOS
	gpio_100	4	I									
V21	ccdc_data2	0	I	L	PD	7	VDDSHV	1.8V/3.3V	Yes	15	PU/ PD	LVCMOS
	gpio_101	4	IO									
	hw_dbg4	5	O									
V19	ccdc_data3	0	I	L	PD	7	VDDSHV	1.8V/3.3V	Yes	15	PU/ PD	LVCMOS
	gpio_102	4	IO									
	hw_dbg5	5	O									
V22	ccdc_data4	0	I	L	PD	7	VDDSHV	1.8V/3.3V	Yes	15	PU/ PD	LVCMOS
	gpio_103	4	IO									
	hw_dbg6	5	O									
U20	ccdc_data5	0	I	L	PD	7	VDDSHV	1.8V/3.3V	Yes	15	PU/ PD	LVCMOS
	gpio_104	4	IO									
	hw_dbg7	5	O									
V20	ccdc_data6	0	I	L	PD	7	VDDSHV	1.8V/3.3V	Yes	15	PU/PD	LVCMOS
	gpio_105	4	IO									
U19	ccdc_data7	0	I	L	PD	7	VDDSHV	1.8V/3.3V	Yes	15	PU/PD	LVCMOS
	gpio_106	4	IO									
U21	rmii_mdio_data	0	IO	H	PU	7	VDDSHV	1.8V/3.3V	Yes	25	PU/PD	LVCMOS
	ccdc_data8	1	I									
	gpio_107	4	IO						8			
U22	rmii_mdio_clk	0	O	H	PU	7	VDDSHV	1.8V/3.3V	Yes	25	PU/PD	LVCMOS
	ccdc_data9	1	I						8			
	gpio_108	4	IO									
T19	rmii_rxd0	0	I	H	PU	7	VDDSHV	1.8V/3.3V	Yes	25	PU/ PD	LVCMOS
	ccdc_data10	1	I									
	gpio_109	4	IO									
	hw_dbg8	5	O									
T20	rmii_rxd1	0	I	H	PU	7	VDDSHV	1.8V/3.3V	Yes	25	PU/ PD	LVCMOS
	ccdc_data11	1	I									
	gpio_110	4	IO									
	hw_dbg9	5	O									
T21	rmii_crs_dv	0	I	H	PU	7	VDDSHV	1.8V/3.3V	Yes	25	PU/ PD	LVCMOS
	ccdc_data12	1	I									
	gpio_111	4	IO									
R22	rmii_rxer	0	I	H	PU	7	VDDSHV	1.8V/3.3V	Yes	25	PU/ PD	LVCMOS
	ccdc_data13	1	I									
	gpio_167	4	IO									
	hw_dbg10	5	O									

Copyright © 2009–2014, Texas Instruments Incorporated

Table 4-2. Ball Characteristics (ZER Pkg.) (continued)

BALL LOCATION [1]	PIN NAME [2]	MODE [3]	TYPE [4]	BALL RESET STATE [5]	BALL RESET REL. STATE [6]	RESET REL. MODE [7]	POWER [8]	VOLTAGE [9]	HYS [10]	LOAD (pF) [11]	PULL U/D TYPE [12]	IO CELL [13]
T22	rmii_txd0	0	O	H	PU	7	VDDSHV	1.8V/3.3V	Yes	25	PU/ PD	LVCMOS
	ccdc_ data14	1	I									
	gpio_126	4	IO									
	hw_dbg11	5	O									
R20	rmii_txd1	0	O	H	PU	7	VDDSHV	1.8V/3.3V	Yes	25	PU/PD	LVCMOS
	ccdc_data15	1	I									
	gpio_112	4	I									
R19	rmii_txen	0	O	H	PU	7	VDDSHV	1.8V/3.3V		25	PU/PD	LVCMOS
	gpio_113	4	I						NA			
R21	rmii_50mhz_ clk	0	I	H	PU	7	VDDSHV	1.8V/3.3V		25	PU/ PD	LVCMOS
	gpio_114	4	I						NA			
E5	mcbsp2_fsx	0	IO	L	PD	7	VDDSHV	1.8V/3.3V	Yes	30	PU/ PD	LVCMOS
	gpio_116	4	IO									
D5	mcbsp2_ clkx	0	IO	L	PD	7	VDDSHV	1.8V/3.3V	Yes	30	PU/ PD	LVCMOS
	gpio_117	4	IO									
C5	mcbsp2_dr	0	I	L	PD	7	VDDSHV	1.8V/3.3V	Yes	30	PU/ PD	LVCMOS
	gpio_118	4	IO									
E4	mcbsp2_dx	0	IO	L	PD	7	VDDSHV	1.8V/3.3V	Yes	30	PU/ PD	LVCMOS
	gpio_119	4	IO									
P22	mmc1_clk	0	O	L	PD	7	VDDSHV	1.8V/3.3V	Yes	30	PU/ PD	LVCMOS
	gpio_120	4	IO									
N21	mmc1_cmd	0	IO	L	PD	7	VDDSHV	1.8V/3.3V	Yes	30	PU/ PD	LVCMOS
	gpio_121	4	IO									
P21	mmc1_dat0	0	IO	L	PD	7	VDDSHV	1.8V/3.3V	Yes	30	PU/ PD	LVCMOS
	mcspi2_clk	1	IO									
	gpio_122	4	IO									
N20	mmc1_dat1	0	IO	L	PD	7	VDDSHV	1.8V/3.3V	Yes	30	PU/ PD	LVCMOS
	mcspi2_simo	1	IO									
	gpio_123	4	IO									
P19	mmc1_dat2	0	IO	L	PD	7	VDDSHV	1.8V/3.3V	Yes	30	PU/ PD	LVCMOS
	mcspi2_somi	1	IO									
	gpio_124	4	IO									
P20	mmc1_dat3	0	IO	L	PD	7	VDDSHV	1.8V/3.3V	Yes	30	PU/ PD	LVCMOS
	mcspi2_cs0	1	O									
	gpio_125	4	IO									
N22	mmc1_dat4	0	IO	L	PD	7	VDDSHV	1.8V/3.3V	No	30	PU/ PD	LVCMOS
	gpio_126	4	IO									
N19	mmc1_dat5	0	IO	L	PD	7	VDDSHV	1.8V/3.3V	No	30	PU/ PD	LVCMOS
	gpio_127	4	IO									
N18	mmc1_dat6	0	IO	L	PD	7	VDDSHV	1.8V/3.3V	No	30	PU/ PD	LVCMOS
	gpio_128	4	IO									
P18	mmc1_dat7	0	IO	L	PD	7	VDDSHV	1.8V/3.3V	No	30	PU/ PD	LVCMOS
	gpio_129	4	IO									
M21	mmc2_clk	0	O	L	PD	7	VDDSHV	1.8V/3.3V	Yes	30	PU/ PD	LVCMOS
	mcspi3_clk	1	IO									
	uart4_cts	2	I									
	gpio_130	4	IO									
M20	mmc2_ cmd	0	IO	H	PU	7	VDDSHV	1.8V/3.3V	Yes	30	PU/ PD	LVCMOS
	mcspi3_ simo	1	IO									
	uart4_rts	2	O									
	gpio_131	4	IO									
K20	mmc2_ dat0	0	IO	H	PU	7	VDDSHV	1.8V/3.3V	Yes	30	PU/ PD	LVCMOS
	mcspi3_ somi	1	IO									

Copyright © 2009–2014, Texas Instruments Incorporated

Table 4-2. Ball Characteristics (ZER Pkg.) (continued)

BALL LOCATION [1]	PIN NAME [2]	MODE [3]	TYPE [4]	BALL RESET STATE [5]	BALL RESET REL. STATE [6]	RESET REL. MODE [7]	POWER [8]	VOLTAGE [9]	HYS [10]	LOAD (pF) [11]	PULL U/D TYPE [12]	IO CELL [13]
	uart4_tx	2	O									
	gpio_132	4	IO									
L19	mmc2_ dat1	0	IO	H	PU	7	VDDSHV	1.8V/3.3V	Yes	30	PU/ PD	LVCMOS
	uart4_rx	2	I									
	gpio_133	4	IO									
M18	mmc2_ dat2	0	IO	H	PU	7	VDDSHV	1.8V/3.3V	Yes	30	PU/ PD	LVCMOS
	mcspi3_cs1	1	O									
	gpio_134	4	IO									
K21	mmc2_ dat3	0	IO	H	PU	7	VDDSHV	1.8V/3.3V	Yes	30	PU/ PD	LVCMOS
	mcspi3_cs0	1	IO									
	gpio_135	4	IO									
L18	mmc2_ dat4	0	IO	L	PD	7	VDDSHV	1.8V/3.3V	Yes	30	PU/ PD	LVCMOS
	mmc2_dir_dat0	1	O									
	mmc3_dat0	3	IO									
	gpio_136	4	IO									
L20	mmc2_ dat5	0	IO	L	PD	7	VDDSHV	1.8V/3.3V	Yes	30	PU/ PD	LVCMOS
	mmc2_dir_dat1	1	O									
	mmc3_dat1	3	IO									
	gpio_137	4	IO									
	mm_fsusb3_rxdp	6	IO									
L21	mmc2_ dat6	0	IO	L	PD	7	VDDSHV	1.8V/3.3V	Yes	30	PU/ PD	LVCMOS
	mmc2_dir_cmd	1	O									
	mmc3_dat2	3	IO									
	gpio_138	4	IO									
M19	mmc2_ dat7	0	IO	L	PD	7	VDDSHV	1.8V/3.3V	Yes	30	PU/ PD	LVCMOS
	mmc2_clkin	1	I									
	mmc3_dat3	3	IO									
	gpio_139	4	IO									
	mm_fsusb3_rxdm	6	IO									
C4	mcbsp3_dx	0	IO	L	PD	7	VDDSHV	1.8V/3.3V	Yes	30	PU/ PD	LVCMOS
	uart2_cts	1	I									
	gpio_140	4	IO									
B4	mcbsp3_dr	0	I	L	PD	7	VDDSHV	1.8V/3.3V	Yes	30	PU/ PD	LVCMOS
	uart2_rts	1	O									
	gpio_141	4	IO									
D4	mcbsp3_ clkx	0	IO	L	PD	7	VDDSHV	1.8V/3.3V	Yes	30	PU/ PD	LVCMOS
	uart2_tx	1	O									
	gpio_142	4	IO									
A4	mcbsp3_fsx	0	IO	L	PD	7	VDDSHV	1.8V/3.3V	Yes	30	PU/ PD	LVCMOS
	uart2_rx	1	I									
	gpio_143	4	IO									
A5	uart2_cts	0	I	H	PU	7	VDDSHV	1.8V/3.3V	Yes	30	PU/ PD	LVCMOS
	mcbsp3_dx	1	IO									
	gpt9_pwm_evt	2	IO									
	gpio_144	4	IO									
B5	uart2_rts	0	O	H	PU	7	VDDSHV	1.8V/3.3V	Yes	30	PU/ PD	LVCMOS
	mcbsp3_dr	1	I									
	gpt10_pwm_evt	2	IO									
	gpio_145	4	IO									
D6	uart2_tx	0	O	H	PU	7	VDDSHV	1.8V/3.3V	Yes	30	PU/ PD	LVCMOS

Copyright © 2009–2014, Texas Instruments Incorporated

Table 4-2. Ball Characteristics (ZER Pkg.) (continued)

BALL LOCATION [1]	PIN NAME [2]	MODE [3]	TYPE [4]	BALL RESET STATE [5]	BALL RESET REL. STATE [6]	RESET REL. MODE [7]	POWER [8]	VOLTAGE [9]	HYS [10]	LOAD (pF) [11]	PULL U/D TYPE [12]	IO CELL [13]
	mcbsp3_clkx	1	IO									
	gpt11_pwm_evt	2	IO									
	gpio_146	4	IO									
C6	uart2_rx	0	I	H	PU	7	VDDSHV	1.8V/3.3V	Yes	30	PU/ PD	LVCMOS
	mcbsp3_fsx	1	IO									
	gpt8_pwm_evt	2	IO									
	gpio_147	4	IO									
C22	uart1_tx	0	O	L	PD	7	VDDSHV	1.8V/3.3V	Yes	30	PU/ PD	LVCMOS
	gpio_148	4	IO									
C21	uart1_rts	0	O	L	PD	7	VDDSHV	1.8V/3.3V	Yes	30	PU/ PD	LVCMOS
	gpio_149	4	IO									
C19	uart1_cts	0	I	L	PD	7	VDDSHV	1.8V/3.3V	Yes	30	PU/ PD	LVCMOS
	gpio_150	4	IO									
C20	uart1_rx	0	I	L	PD	7	VDDSHV	1.8V/3.3V	Yes	30	PU/ PD	LVCMOS
	mcbsp1_ clkr	2	I									
	mcspi4_clk	3	IO									
	gpio_151	4	IO									
A3	mcbsp4_ clkx	0	IO	L	PD	7	VDDSHV	1.8V/3.3V	Yes	30	PU/ PD	LVCMOS
	gpio_152	4	IO									
	mm_fsusb3_txse0	6	IO									
B3	mcbsp4_dr	0	I	L	PD	7	VDDSHV	1.8V/3.3V	Yes	30	PU/ PD	LVCMOS
	gpio_153	4	IO									
	mm_fsusb3_rxrcv	6	IO									
A2	mcbsp4_dx	0	IO	L	PD	7	VDDSHV	1.8V/3.3V	Yes	30	PU/ PD	LVCMOS
	gpio_154	4	IO									
	mm_fsusb3_txdat	6	IO									
B2	mcbsp4_fsx	0	IO	L	PD	7	VDDSHV	1.8V/3.3V	Yes	30	PU/ PD	LVCMOS
	gpio_155	4	IO									
	mm_fsusb3_txen_n	6	IO									
B11	mcbsp1_ clkr	0	IO	L	PD	7	VDDSHV	1.8V/3.3V	Yes	30	PU/ PD	LVCMOS
	mcspi4_clk	1	IO									
	gpio_156	4	IO									
D11	mcbsp1_fsr	0	IO	L	PD	7	VDDSHV	1.8V/3.3V	Yes	30	PU/ PD	LVCMOS
	gpio_157	4	IO									
C10	mcbsp1_dx	0	IO	L	PD	7	VDDSHV	1.8V/3.3V	Yes	30	PU/ PD	LVCMOS
	mcspi4_ simo	1	IO									
	mcbsp3_dx	2	I									
	gpio_158	4	IO									
C9	mcbsp1_dr	0	I	L	PD	7	VDDSHV	1.8V/3.3V	Yes	30	PU/ PD	LVCMOS
	mcspi4_ somi	1	IO									
	mcbsp3_dr	2	I									
	gpio_159	4	IO									
E11	mcbsp_clks	0	I	L	PD	7	VDDSHV	1.8V/3.3V	Yes	30	PU/ PD	LVCMOS
	gpio_160	4	IO									
	uart1_cts	5	I									
C11	mcbsp1_fsx	0	IO	L	PD	7	VDDSHV	1.8V/3.3V	Yes	30	PU/ PD	LVCMOS
	mcspi4_cs0	1	IO									
	mcbsp3_fsx	2	IO									
	gpio_161	4	IO									
C8	mcbsp1_ clkx	0	IO	L	PD	7	VDDSHV	1.8V/3.3V	Yes	30	PU/ PD	LVCMOS

Copyright © 2009–2014, Texas Instruments Incorporated

Table 4-2. Ball Characteristics (ZER Pkg.) (continued)

BALL LOCATION [1]	PIN NAME [2]	MODE [3]	TYPE [4]	BALL RESET STATE [5]	BALL RESET REL. STATE [6]	RESET REL. MODE [7]	POWER [8]	VOLTAGE [9]	HYS [10]	LOAD (pF) [11]	PULL U/D TYPE [12]	IO CELL [13]
	mcbsp3_clkx	2	IO									
	gpio_162	4	IO									
W15	uart3_cts_rctx	0	IO	H	PU	7	VDDSHV	1.8V/3.3V	Yes	30	PU/ PD	LVCMOS
	gpio_163	4	IO									
W13	uart3_rts_sd	0	O	H	PU	7	VDDSHV	1.8V/3.3V	Yes	30	PU/ PD	LVCMOS
	gpio_164	4	IO									
AA13	uart3_rx_irrx	0	I	H	PU	7	VDDSHV	1.8V/3.3V	Yes	30	PU/ PD	LVCMOS
	gpio_165	4	IO									
Y13	uart3_tx_irtx	0	O	H	PU	7	VDDSHV	1.8V/3.3V	Yes	30	PU/ PD	LVCMOS
	gpio_166	4	IO									
A6	usb0_dp	0	IO					5.0V	Yes		PU/ PD	LVCMOS
B6	usb0_dm	0	IO					5.0V	Yes		PU/ PD	LVCMOS
C7	usb0_vbus	0	A				VDDA3P3V_USBPHY	3.3V	Yes		PU/ PD	LVCMOS
B7	usb0_id	0	A				VDDA3P3V_USBPHY	3.3V	Yes		PU/ PD	LVCMOS
A7	usb0_drvvbus	0	O	L	PD	7	VDDSHV	1.8V/3.3V		30		
	uart3_tx_irtx	2	O									
	gpio_125	4	IO									
AB15	hecc1_ txd	0	O	H	PU	7	VDDSHV	1.8V/3.3V	Yes	24	PU/ PD	LVCMOS
	uart3_rx_irrx	2	I									
	gpio_130	4	IO									
AB16	hecc1_ rxd	0	I	H	PU	7	VDDSHV	1.8V/3.3V	Yes	24	PU/ PD	LVCMOS
	uart3_rts_sd	2	O									
	gpio_131	4	IO									
AA17	i2c1_scl	0	IOD	H	PU	0	VDDSHV	1.8V/3.3V	Yes	40	PU/ PD	Open Drain
AB17	i2c1_ sda	0	IOD	H	PU	0	VDDSHV	1.8V/3.3V	Yes	40	PU/ PD	Open Drain
Y17	i2c2_scl	0	IOD	H	PU	7	VDDSHV	1.8V/3.3V	Yes	40	PU/ PD	Open Drain
	gpio_168	4	IO									
Y16	i2c2_sda	0	IOD	H	PU	7	VDDSHV	1.8V/3.3V	Yes	40	PU/ PD	Open Drain
	gpio_183	4	IO									
W16	i2c3_scl	0	IOD	H	PU	7	VDDSHV	1.8V/3.3V	Yes	40	PU/ PD	Open Drain
	gpio_184	4	IO									
W17	i2c3_sda	0	IOD	H	PU	7	VDDSHV	1.8V/3.3V	Yes	40	PU/ PD	Open Drain
	gpio_185	4	IO									
B9	hdq_sio	0	IO	H	PU	7	VDDSHV	1.8V/3.3V	Yes	40	PU/ PD	LVCMOS
	sys_altclk	1	I									
	i2c2_sccbe	2	O									
	i2c3_sccbe	3	O									
	gpio_170	4	IO									
K22	mcspi1_clk	0	IO	L	PD	7	VDDSHV	1.8V/3.3V	Yes	30	PU/ PD	LVCMOS
	mmc2_dat4	1	IO									
	gpio_171	4	IO									
K19	mcspi1_simo	0	IO	L	PD	7	VDDSHV	1.8V/3.3V	Yes	30	PU/ PD	LVCMOS
	mmc2_dat5	1	IO									
	gpio_172	4	IO									
J18	mcspi1_somi	0	IO	L	PD	7	VDDSHV	1.8V/3.3V	Yes	30	PU/ PD	LVCMOS
	mmc2_dat6	1	IO									
	gpio_173	4	IO									
K18	mcspi1_cs0	0	IO	H	PU	7	VDDSHV	1.8V/3.3V	Yes	30	PU/ PD	LVCMOS
	mmc2_dat7	1	IO									
	gpio_174	4	IO									
J20	mcspi1_cs1	0	O	H	PU	7	VDDSHV	1.8V/3.3V	Yes	30	PU/ PD	LVCMOS

Copyright © 2009–2014, Texas Instruments Incorporated

Table 4-2. Ball Characteristics (ZER Pkg.) (continued)

BALL LOCATION [1]	PIN NAME [2]	MODE [3]	TYPE [4]	BALL RESET STATE [5]	BALL RESET REL. STATE [6]	RESET REL. MODE [7]	POWER [8]	VOLTAGE [9]	HYS [10]	LOAD (pF) [11]	PULL U/D TYPE [12]	IO CELL [13]
	mmc3_cmd	3	IO									
	gpio_175	4	IO									
J19	mcspi1_cs2	0	O	H	PU	7	VDDSHV	1.8V/3.3V	Yes	30	PU/ PD	LVCMOS
	mmc3_clk	3	O									
	gpio_176	4	IO									
J21	mcspi1_cs3	0	O	H	PU	7	VDDSHV	1.8V/3.3V	Yes	30	PU/ PD	LVCMOS
	hsusb2_ data2	3	IO									
	gpio_177	4	IO									
	mm_fsusb2_t xdat	5	IO									
J22	mcspi2_clk	0	IO	L	PD	7	VDDSHV	1.8V/3.3V	Yes	30	PU/ PD	LVCMOS
	hsusb2_ data7	3	IO									
	gpio_178	4	IO									
H20	mcspi2_ simo	0	IO	L	PD	7	VDDSHV	1.8V/3.3V	Yes	30	PU/ PD	LVCMOS
	gpt9_pwm_e vt	1	IO									
	hsusb2_ data4	3	IO									
	gpio_179	4	IO									
H22	mcspi2_ somi	0	IO	L	PD	7	VDDSHV	1.8V/3.3V	Yes	30	PU/ PD	LVCMOS
	gpt10_pwm_ evt	1	IO									
	hsusb2_ data5	3	IO									
	gpio_180	4	IO									
H21	mcspi2_cs0	0	IO	H	PU	7	VDDSHV	1.8V/3.3V	Yes	30	PU/ PD	LVCMOS
	gpt11_pwm_ evt	1	IO									
	hsusb2_ data6	3	IO									
	gpio_181	4	IO									
H19	mcspi2_cs1	0	O	L	PD	7	VDDSHV	1.8V/3.3V	Yes	30	PU/ PD	LVCMOS
	gpt8_pwm_e vt	1	IO									
	hsusb2_ data3	3	IO									
	gpio_182	4	IO									
	mm_fsusb2_t xen_n	5	IO									
A8	sys_32k	0	I	Z	Z	0	VDDSHV	1.8V/3.3V	Yes	30	PU/ PD	LVCMOS
A10	sys_xtalin	0	I	Z	Z	0	VDDSOSC	1.8V	NA		PU/ PD	LVCMOS
A9	sys_xtalout	0	O	Z	Z	0	VDDSOSC	1.8V	NA		PU/ PD	LVCMOS
B8	sys_clkreq	0	IO	L	Z	0	VDDSHV	1.8V/3.3V	Yes	30	PU/ PD	LVCMOS
	gpio_1	4	IO									
AB18	sys_nirq	0	I	H	PU	7	VDDSHV	1.8V/3.3V	Yes	30	PU/ PD	LVCMOS
	gpio_0	4	IO									
AA18	sys_ nrespwron	0	I	Z	Z	0	VDDSHV	1.8V/3.3V	Yes	30	PU/ PD	LVCMOS
Y18	sys_ nreswarm	0	IO	L	PD	0	VDDSHV	1.8V/3.3V	Yes	30	PU/ PD	LVCMOS
	gpio_30	4	IO									Open Drain
AB19	sys_boot0	0	I	Z	Z	0	VDDSHV	1.8V/3.3V	Yes	30	PU/ PD	LVCMOS
	gpio_2	4	IO									
AB20	sys_boot1	0	I	Z	Z	0	VDDSHV	1.8V/3.3V	Yes	30	PU/ PD	LVCMOS
	gpio_3	4	IO									
W18	sys_boot2	0	I	Z	Z	0	VDDSHV	1.8V/3.3V	Yes	30	PU/ PD	LVCMOS
	gpio_4	4	IO									

Copyright © 2009–2014, Texas Instruments Incorporated

Table 4-2. Ball Characteristics (ZER Pkg.) (continued)

BALL LOCATION [1]	PIN NAME [2]	MODE [3]	TYPE [4]	BALL RESET STATE [5]	BALL RESET REL. STATE [6]	RESET REL. MODE [7]	POWER [8]	VOLTAGE [9]	HYS [10]	LOAD (pF) [11]	PULL U/D TYPE [12]	IO CELL [13]
AA19	sys_boot3	0	I	Z	Z	0	VDDSHV	1.8V/3.3V	Yes	30	PU/ PD	LVCMOS
	gpio_5	4	IO									
V18	sys_boot4	0	I	Z	Z	0	VDDSHV	1.8V/3.3V	Yes	30	PU/ PD	LVCMOS
	mmc2_dir_dat2	1	O									
	gpio_6	4	IO									
Y19	sys_boot5	0	I	Z	Z	0	VDDSHV	1.8V/3.3V	Yes	30	PU/ PD	LVCMOS
	mmc2_dir_dat3	1	O									
	gpio_7	4	IO									
W19	sys_boot6	0	I	Z	Z	0	VDDSHV	1.8V/3.3V	Yes	30	PU/ PD	LVCMOS
	gpio_8	4	IO									
AA20	sys_boot7	0	I	Z	Z	0	VDDSHV	1.8V/3.3V	Yes	30	PU/PD	LVCMOS
Y20	sys_boot8	0	I	Z	Z	0	VDDSHV	1.8V/3.3V	Yes	30	PU/PD	LVCMOS
E9	sys_clkout1	0	O	H	PD	0/7 (1)	VDDSHV	1.8V/3.3V	Yes	30	PU/ PD	LVCMOS
	gpio_10	4	IO									
E10	sys_clkout2	0	O	L	PD	7	VDDSHV	1.8V/3.3V	Yes	10	PU/ PD	LVCMOS
	gpio_186	4	IO									
D13	jtag_ntrst	0	I	L	PD	0	VDDSHV	1.8V/3.3V	Yes	20	PU/ PD	LVCMOS
E14	jtag_tck	0	I	L	PD	0	VDDSHV	1.8V/3.3V	Yes	20	PU/ PD	LVCMOS
C12	jtag_rtck	0	O	L	Z	0	VDDSHV	1.8V/3.3V	Yes	20	PU/ PD	LVCMOS
A12	jtag_tms_tmsc	0	IO	H	PU	0	VDDSHV	1.8V/3.3V	Yes	20	PU/ PD	LVCMOS
B12	jtag_tdi	0	I	H	PU	0	VDDSHV	1.8V/3.3V	Yes	20	PU/ PD	LVCMOS
D12	jtag_tdo	0	O	L	Z	0	VDDSHV	1.8V/3.3V	Yes	20	PU/ PD	LVCMOS
E13	jtag_emu0	0	IO	H	PU	0	VDDSHV	1.8V/3.3V	Yes	20	PU/ PD	LVCMOS
	gpio_11	4	IO									
E12	jtag_emu1	0	IO	H	PU	0	VDDSHV	1.8V/3.3V	Yes	20	PU/ PD	LVCMOS
	gpio_31	4	IO									
G22	etk_clk	0	O	H	PU	4	VDDSHV	1.8V/3.3V	Yes	9, 25	PU/ PD	LVCMOS
	mcbsp5_ clkx	1	IO									
	mmc3_clk	2	O									
	hsusb1_stp	3	O									
	gpio_12	4	IO									
G21	etk_ctl	0	O	H	PU	4	VDDSHV	1.8V/3.3V	Yes	9, 25	PU/ PD	LVCMOS
	mmc3_cmd	2	IO									
	hsusb1_clk	3	O									
	gpio_13	4	IO									
	mm_fsusb1_rxdp	5	IO									
G20	etk_d0	0	O	H	PU	4	VDDSHV	1.8V/3.3V	Yes	9, 25	PU/ PD	LVCMOS
	mcspi3_ simo	1	IO									
	mmc3_dat4	2	IO									
	hsusb1_ data0	3	IO									
	gpio_14	4	IO									
	mm_fsusb1_rxrcv	5	IO									
F22	etk_d1	0	O	H	PU	4	VDDSHV	1.8V/3.3V	Yes	9, 25	PU/ PD	LVCMOS
	mcspi3_ somi	1	IO									
	hsusb1_ data1	3	IO									
	gpio_15	4	IO									
	mm_fsusb1_txse0	5	IO									

(1) Mux0 if sys_boot6 is pulled down (clock master).

Copyright © 2009–2014, Texas Instruments Incorporated

Table 4-2. Ball Characteristics (ZER Pkg.) (continued)

BALL LOCATION [1]	PIN NAME [2]	MODE [3]	TYPE [4]	BALL RESET STATE [5]	BALL RESET REL. STATE [6]	RESET REL. MODE [7]	POWER [8]	VOLTAGE [9]	HYS [10]	LOAD (pF) [11]	PULL U/D TYPE [12]	IO CELL [13]
F20	etk_d2	0	O	H	PU	4	VDDSHV	1.8V/3.3V	Yes	9, 25	PU/ PD	LVCMOS
	mcspi3_cs0	1	IO									
	hsusb1_ data2	3	IO									
	gpio_16	4	IO									
	mm_fsusb1_t xdat	5	IO									
G19	etk_d3	0	O	L	PU	4	VDDSHV	1.8V/3.3V	Yes	9, 25	PU/ PD	LVCMOS
	mcspi3_clk	1	IO									
	mmc3_dat3	2	IO									
	hsusb1_ data7	3	IO									
	gpio_17	4	IO									
E19	etk_d4	0	O	L	PD	4	VDDSHV	1.8V/3.3V	Yes	9, 25	PU/ PD	LVCMOS
	mcbsp5_dr	1	I									
	mmc3_dat0	2	IO									
	hsusb1_ data4	3	IO									
	gpio_18	4	IO									
F21	etk_d5	0	O	L	PD	4	VDDSHV	1.8V/3.3V	Yes	9, 25	PU/ PD	LVCMOS
	mcbsp5_fsx	1	IO									
	mmc3_dat1	2	IO									
	hsusb1_ data5	3	IO									
	gpio_19	4	IO									
F19	etk_d6	0	O	L	PD	4	VDDSHV	1.8V/3.3V	Yes	9, 25	PU/ PD	LVCMOS
	mcbsp5_dx	1	IO									
	mmc3_dat2	2	IO									
	hsusb1_ data6	3	IO									
	gpio_20	4	IO									
E21	etk_d7	0	O	L	PD	4	VDDSHV	1.8V/3.3V	Yes	9, 25	PU/ PD	LVCMOS
	mcspi3_cs1	1	O									
	mmc3_dat7	2	IO									
	hsusb1_ data3	3	IO									
	gpio_21	4	IO									
	mm_fsusb1_t xen_n	5	IO									
D22	etk_d8	0	O	L	PD	4	VDDSHV	1.8V/3.3V	Yes	9, 25	PU/ PD	LVCMOS
	mmc3_dat6	2	IO									
	hsusb1_dir	3	I									
	gpio_22	4	IO									
D21	etk_d9	0	O	L	PD	4	VDDSHV	1.8V/3.3V	Yes	9, 25	PU/ PD	LVCMOS
	mmc3_dat5	2	IO									
	hsusb1_nxt	3	I									
	gpio_23	4	IO									
	mm_fsusb1_r xdm	5	IO									
E22	etk_d10	0	O	L	PD	4	VDDSHV	1.8V/3.3V	Yes	9, 25	PU/ PD	LVCMOS
	uart1_rx	2	I									
	hsusb2_clk	3	O									
	gpio_24	4	IO									
E20	etk_d11	0	O	L	PD	4	VDDSHV	1.8V/3.3V	Yes	9, 25	PU/ PD	LVCMOS
	mcspi3_clk	1	IO									
	hsusb2_stp	3	O									
	gpio_25	4	IO									

Copyright © 2009–2014, Texas Instruments Incorporated

Table 4-2. Ball Characteristics (ZER Pkg.) (continued)

BALL LOCATION [1]	PIN NAME [2]	MODE [3]	TYPE [4]	BALL RESET STATE [5]	BALL RESET REL. STATE [6]	RESET REL. MODE [7]	POWER [8]	VOLTAGE [9]	HYS [10]	LOAD (pF) [11]	PULL U/D TYPE [12]	IO CELL [13]
	mm_fsusb2_rxdp	5	IO									
E18	etk_d12	0	O	L	PD	4	VDDSHV	1.8V/3.3V	Yes	9, 25	PU/ PD	LVCMOS
	hsusb2_dir	3	I									
	gpio_26	4	IO									
D20	etk_d13	0	O	L	PD	4	VDDSHV	1.8V/3.3V	Yes	9, 25	PU/ PD	LVCMOS
	hsusb2_nxt	3	I									
	gpio_27	4	IO									
	mm_fsusb2_rxdm	5	IO									
D19	etk_d14	0	O	L	PD	4	VDDSHV	1.8V/3.3V	Yes	9, 25	PU/ PD	LVCMOS
	hsusb2_data0	3	IO									
	gpio_28	4	IO									
	mm_fsusb2_rxrcv	5	IO									
D18	etk_d15	0	O	L	PD	4	VDDSHV	1.8V/3.3V	Yes	9, 25	PU/ PD	LVCMOS
	hsusb2_data1	3	IO									
	gpio_29	4	IO									
	mm_fsusb2_txse0	5	IO									
M2	ddr_padref	0	A				VDDS	1.8V				
J8, J10, J12, J14, J16, K9, K11, K13, K15, L8, L10, L12, L14, M7, M9, M11, M13, M15, N8, N10, N12, N14, P7, P9, P11, P13, P15, R8, R10, R12, R14	VDD_CORE	0	PWR					1.2V				
L17	VDDS_SRAM_MPU	0	PWR					1.8V				
J6	VDDS_SRAM_CORE_BG	0	PWR					1.8V				
M17	CAP_VDD_SRAM_MPU	0	PWR					1.2V				
K6	CAP_VDD_SRAM_CORE	0	PWR					1.2V				
K17	VDDS_DPLL_MPU_USBHOST	0	PWR					1.8V				
F11	VDDS_DPLL_PER_CORE	0	PWR					1.8V				
F7	VDDA3P3V_USBPHY	0	PWR					3.3V				
D7	VDDA1P8V_USBPHY	0	PWR					1.8V				
E7	CAP_VDDA1P2LDO_USBPHY	0	PWR					1.2V				

Copyright © 2009–2014, Texas Instruments Incorporated

Table 4-2. Ball Characteristics (ZER Pkg.) (continued)

BALL LOCATION [1]	PIN NAME [2]	MODE [3]	TYPE [4]	BALL RESET STATE [5]	BALL RESET REL. STATE [6]	RESET REL. MODE [7]	POWER [8]	VOLTAGE [9]	HYS [10]	LOAD (pF) [11]	PULL U/D TYPE [12]	IO CELL [13]
A21, B1, E15, E17, F12, F14, F18, G10, G12, G13, G8, G17, H18, J17, L22, N16, P17, R16, R18, T9, T11, T13, T17, U8, U10, U12, U14, U16, U18, V7, V8, V17, AA22, AB11	VDDSHV	0	PWR					1.8V/3.3V				
F5, F16, G15, H5, K7, L6, L16, N1, N5, N6, P5, R6, T5, T7, T15, U6, AA1	VDDS	0	PWR					1.8V				
L5	VREFSSTL	0	I					.5 * VDDS				
G9	VDDSOSC	O	PWR					1.8V				
A1, A11, A22, E6, E16, F6, F13, F15, F17, G5, G7, G11, G14, G16, G18, H6, H7, H8, H9, H10, H11, H12, H13, H14, H15, H16, H17, J9, J11, J13, J15, K8, K10, K12, K14, K16, L7, L9, L11, L13, L15, M1, M6, M8, M10, M12, M14, M16, M22, N7, N9, N11, N13, N15, N17, P6, P8, P10, P12, P14, P16, R5, R7, R9, R11, R13, R15, R17, T6, T8, T10, T12, T14, T16, T18, U5, U7, U9, U11, U13, U15, U17, V6, AB1, AB12, AB22	VSS	0	GND									
B10	VSSOSC	0	GND									
D8, D9, D10, E8, F8, F9, F10, J7, G6	NC(2)											
V15	Reserved(3)											
V16	Reserved(3)											

(2) "NC" indicates "No Connect". For proper device operation, these pins ***must be*** left unconnected.
(3) For proper device operation, this pin ***must be*** pulled up via a 10k-Ω resistor.

Copyright © 2009–2014, Texas Instruments Incorporated

4.3 Multiplexing Characteristics

Table 4-3 provides descriptions of the AM3517/05 pin multiplexing on the ZCN and ZER packages.

Table 4-3. Multiplexing Characteristics

ZER	ZCN	MODE 0	MODE 1	MODE 2	MODE 3	MODE 4	MODE 5	MODE 6	MODE 7
BALL NO	**BALL NO**								
E3	B21	sdrc_d0							
D3	A21	sdrc_d1							
C3	D20	sdrc_d2							
C2	C20	sdrc_d3							
F3	E19	sdrc_d4							
D2	D19	sdrc_d5							
C1	C19	sdrc_d6							
D1	B19	sdrc_d7							
G2	B18	sdrc_d8							
G3	D17	sdrc_d9							
H3	C17	sdrc_d10							
G4	D16	sdrc_d11							
H4	C16	sdrc_d12							
G1	B16	sdrc_d13							
J3	A16	sdrc_d14							
J1	A15	sdrc_d15							
T3	A7	sdrc_d16							
U3	B7	sdrc_d17							
U4	D7	sdrc_d18							
V4	E7	sdrc_d19							
V1	C6	sdrc_d20							
V2	D6	sdrc_d21							
V5	B5	sdrc_d22							
V3	C5	sdrc_d23							
W3	B4	sdrc_d24							
W4	A3	sdrc_d25							
Y3	B3	sdrc_d26							
Y4	C3	sdrc_d27							
AA2	C2	sdrc_d28							
AA3	D2	sdrc_d29							
AA4	B1	sdrc_d30							
AB2	C1	sdrc_d31							
L4	A12	sdrc_ba0							
K5	C13	sdrc_ba1							
J5	D13	sdrc_ba2							
M3	A11	sdrc_a0							
M4	B11	sdrc_a1							
M5	C11	sdrc_a2							
N3	D11	sdrc_a3							
N2	E11	sdrc_a4							
N4	A10	sdrc_a5							
P3	B10	sdrc_a6							
P2	C10	sdrc_a7							
P1	D10	sdrc_a8							
P4	E10	sdrc_a9							
R1	A9	sdrc_a10							
R2	B9	sdrc_a11							
R3	A8	sdrc_a12							
R4	B8	sdrc_a13							
T2	D8	sdrc_a14							
J4	E13	sdrc_ncs0							

Copyright © 2009–2014, Texas Instruments Incorporated

Table 4-3. Multiplexing Characteristics (continued)

ZER	ZCN	MODE 0	MODE 1	MODE 2	MODE 3	MODE 4	MODE 5	MODE 6	MODE 7
K4	A14	sdrc_ncs1							
L1	A13	sdrc_clk							
L2	B13	sdrc_nclk							
K3	D14	sdrc_cke0							sdrc_cke0_safe
K1	C14	sdrc_nras							
L3	E14	sdrc_ncas							
K2	B14	sdrc_nwe							
F4	C21	sdrc_dm0							
J2	B15	sdrc_dm1							
T4	E8	sdrc_dm2							
AB3	D1	sdrc_dm3							
E2	B20	sdrc_dqs0p							
H2	B17	sdrc_dqs1p							
U1	A6	sdrc_dqs2p							
Y1	A2	sdrc_dqs3p							
E1	A20	sdrc_dqs0n							
H1	A17	sdrc_dqs1n							
U2	B6	sdrc_dqs2n							
Y2	B2	sdrc_dqs3n							
T1	C8	sdrc_odt							
F2	A19	sdrc_strben0							
F1	A18	sdrc_strben_dly0							
W1	A5	sdrc_strben1							
W2	A4	sdrc_strben_dly1							
W5	E3	gpmc_a1				gpio_34			safe_mode
Y5	E2	gpmc_a2				gpio_35			safe_mode
AB4	E1	gpmc_a3				gpio_36			safe_mode
AA5	F7	gpmc_a4				gpio_37			safe_mode
AB5	F6	gpmc_a5				gpio_38			safe_mode
AB6	F4	gpmc_a6				gpio_39			safe_mode
AA6	F3	gpmc_a7				gpio_40			safe_mode
W6	F2	gpmc_a8				gpio_41			safe_mode
AB7	F1	gpmc_a9	sys_ndmareq2			gpio_42			safe_mode
Y6	G6	gpmc_a10	sys_ndmareq3			gpio_43			safe_mode
AA7	G5	gpmc_d0							
Y7	G4	gpmc_d1							
W7	G3	gpmc_d2							
AA9	G2	gpmc_d3							
Y8	G1	gpmc_d4							
AA8	H2	gpmc_d5							
AB8	H1	gpmc_d6							
W8	J5	gpmc_d7							
W10	J4	gpmc_d8				gpio_44			
AB9	J3	gpmc_d9				gpio_45			
AB10	J2	gpmc_d10				gpio_46			
W9	J1	gpmc_d11				gpio_47			
AA10	K4	gpmc_d12				gpio_48			
Y9	K3	gpmc_d13				gpio_49			
V10	K2	gpmc_d14				gpio_50			
V9	K1	gpmc_d15				gpio_51			
Y10	L2	gpmc_ncs0							
Y11	L1	gpmc_ncs1				gpio_52			
Y12	M4	gpmc_ncs2		gpt9_pwm_evt		gpio_53			safe_mode
V12	M3	gpmc_ncs3	sys_ndmareq0	gpt10_pwm_evt		gpio_54			safe_mode
AA11	M2	gpmc_ncs4	sys_ndmareq1		gpt9_pwm_evt	gpio_55			safe_mode
W12	M1	gpmc_ncs5	sys_ndmareq2		gpt10_pwm_evt	gpio_56			safe_mode

Copyright © 2009–2014, Texas Instruments Incorporated

Table 4-3. Multiplexing Characteristics (continued)

ZER	ZCN	MODE 0	MODE 1	MODE 2	MODE 3	MODE 4	MODE 5	MODE 6	MODE 7
AA12	N5	gpmc_ncs6	sys_ndmareq3		gpt11_pwm_evt	gpio_57			safe_mode
V11	N4	gpmc_ncs7	gpmc_io_dir		gpt8_pwm_evt	gpio_58			safe_mode
AB13	N1	gpmc_clk				gpio_59			
AA14	R1	gpmc_nadv_ale							
AB14	R2	gpmc_noe							
AA15	R3	gpmc_nwe							
W11	R4	gpmc_nbe0_cle				gpio_60			
Y15	T1	gpmc_nbe1				gpio_61			safe_mode
W14	T2	gpmc_nwp				gpio_62			
V13	T3	gpmc_wait0							
AA16	T4	gpmc_wait1	uart4_tx			gpio_63			safe_mode
Y14	T5	gpmc_wait2	uart4_rx			gpio_64			safe_mode
V14	U1	gpmc_wait3	sys_ndmareq1	uart3_cts_rctx		gpio_65			safe_mode
B22	AE23	dss_pclk				gpio_66	hw_dbg12		safe_mode
B21	AD22	dss_hsync				gpio_67	hw_dbg13		safe_mode
B20	AD23	dss_vsync				gpio_68			safe_mode
B19	AE24	dss_acbias				gpio_69			safe_mode
A20	AD24	dss_data0		uart1_cts		gpio_70			safe_mode
A19	AD25	dss_data1		uart1_rts		gpio_71			safe_mode
A18	AC23	dss_data2				gpio_72			safe_mode
B18	AC24	dss_data3				gpio_73			safe_mode
A17	AC25	dss_data4		uart3_rx_irrx		gpio_74			safe_mode
C18	AB24	dss_data5		uart3_tx_irtx		gpio_75			safe_mode
D17	AB25	dss_data6		uart1_tx		gpio_76	hw_dbg14		safe_mode
B16	AA23	dss_data7		uart1_rx		gpio_77	hw_dbg15		safe_mode
B17	AA24	dss_data8				gpio_78	hw_dbg16		safe_mode
C17	AA25	dss_data9				gpio_79	hw_dbg17		safe_mode
C16	Y22	dss_data10				gpio_80			safe_mode
D16	Y23	dss_data11				gpio_81			safe_mode
D14	Y24	dss_data12				gpio_82			safe_mode
A16	Y25	dss_data13				gpio_83			safe_mode
D15	W21	dss_data14				gpio_84			safe_mode
B15	W22	dss_data15				gpio_85			safe_mode
A15	W23	dss_data16				gpio_86			safe_mode
A14	W24	dss_data17				gpio_87			safe_mode
C13	W25	dss_data18		mcspi3_clk	dss_data4	gpio_88			safe_mode
C15	V24	dss_data19		mcspi3_simo	dss_data3	gpio_89			safe_mode
A13	V25	dss_data20		mcspi3_somi	dss_data2	gpio_90			safe_mode
B13	U21	dss_data21		mcspi3_cs0	dss_data1	gpio_91			safe_mode
C14	U22	dss_data22		mcspi3_cs1	dss_data0	gpio_92			safe_mode
B14	U23	dss_data23			dss_data5	gpio_93			safe_mode
NA	K20	tv_vfb1							
NA	K21	tv_out1							
NA	H23	tv_vfb2							
NA	H24	tv_out2							
NA	H20	tv_vref							
AB21	AD2	ccdc_pclk				gpio_94	hw_dbg0		safe_mode
AA21	AD1	ccdc_field	ccdc_data8	uart4_tx	i2c3_scl	gpio_95	hw_dbg1		safe_mode
Y21	AE2	ccdc_hd		uart4_rts		gpio_96			safe_mode
Y22	AD3	ccdc_vd		uart4_cts		gpio_97	hw_dbg2		safe_mode
W21	AE3	ccdc_wen	ccdc_data9	uart4_rx		gpio_98	hw_dbg3		safe_mode
W22	AD4	ccdc_data0			i2c3_sda	gpio_99			safe_mode
W20	AE4	ccdc_data1				gpio_100			safe_mode
V21	AC5	ccdc_data2				gpio_101	hw_dbg4		safe_mode
V19	AD5	ccdc_data3				gpio_102	hw_dbg5		safe_mode
V22	AE5	ccdc_data4				gpio_103	hw_dbg6		safe_mode

Copyright © 2009–2014, Texas Instruments Incorporated

Table 4-3. Multiplexing Characteristics (continued)

ZER	ZCN	MODE 0	MODE 1	MODE 2	MODE 3	MODE 4	MODE 5	MODE 6	MODE 7
U20	Y6	ccdc_data5				gpio_104	hw_dbg7		safe_mode
V20	AB6	ccdc_data6				gpio_105			safe_mode
U19	AC6	ccdc_data7				gpio_106			safe_mode
U21	AE6	rmii_mdio_data	ccdc_data8			gpio_107			safe_mode
U22	AD6	rmii_mdio_clk	ccdc_data9			gpio_108			safe_mode
T19	Y7	rmii_rxd0	ccdc_data10			gpio_109	hw_dbg8		safe_mode
T20	AA7	rmii_rxd1	ccdc_data11			gpio_110	hw_dbg9		safe_mode
T21	AB7	rmii_crs_dv	ccdc_data12			gpio_111			safe_mode
R22	AC7	rmii_rxer	ccdc_data13			gpio_167	hw_dbg10		safe_mode
T22	AD7	rmii_txd0	ccdc_data14			gpio_126	hw_dbg11		safe_mode
R20	AE7	rmii_txd1	ccdc_data15			gpio_112			safe_mode
R19	AD8	rmii_txen				gpio_113			safe_mode
R21	AE8	rmii_50mhz_clk				gpio_114			safe_mode
E5	D25	mcbsp2_fsx				gpio_116			safe_mode
D5	C25	mcbsp2_clkx				gpio_117			safe_mode
C5	B25	mcbsp2_dr				gpio_118			safe_mode
E4	D24	mcbsp2_dx				gpio_119			safe_mode
P22	AA9	mmc1_clk				gpio_120			safe_mode
N21	AB9	mmc1_cmd				gpio_121			safe_mode
P21	AC9	mmc1_dat0	mcspi2_clk			gpio_122			safe_mode
N20	AD9	mmc1_dat1	mcspi2_simo			gpio_123			safe_mode
P19	AE9	mmc1_dat2	mcspi2_somi			gpio_124			safe_mode
P20	AA10	mmc1_dat3	mcspi2_cs0			gpio_125			safe_mode
N22	AB10	mmc1_dat4				gpio_126			safe_mode
N19	AC10	mmc1_dat5				gpio_127			safe_mode
N18	AD10	mmc1_dat6				gpio_128			safe_mode
P18	AE10	mmc1_dat7				gpio_129			safe_mode
M21	AD11	mmc2_clk	mcspi3_clk	uart4_cts		gpio_130			safe_mode
M20	AE11	mmc2_cmd	mcspi3_simo	uart4_rts		gpio_131			safe_mode
K20	AB12	mmc2_dat0	mcspi3_somi	uart4_tx		gpio_132			safe_mode
L19	AC12	mmc2_dat1		uart4_rx		gpio_133			safe_mode
M18	AD12	mmc2_dat2	mcspi3_cs1			gpio_134			safe_mode
K21	AE12	mmc2_dat3	mcspi3_cs0			gpio_135			safe_mode
L18	AB13	mmc2_dat4	mmc2_dir_dat0		mmc3_dat0	gpio_136			safe_mode
L20	AC13	mmc2_dat5	mmc2_dir_dat1		mmc3_dat1	gpio_137		mm_fsusb3_rxdp	safe_mode
L21	AD13	mmc2_dat6	mmc2_dir_cmd		mmc3_dat2	gpio_138			safe_mode
M19	AE13	mmc2_dat7	mmc2_clkin		mmc3_dat3	gpio_139		mm_fsusb3_rxdm	safe_mode
C4	B24	mcbsp3_dx	uart2_cts			gpio_140			safe_mode
B4	C24	mcbsp3_dr	uart2_rts			gpio_141			safe_mode
D4	A24	mcbsp3_clkx	uart2_tx			gpio_142			safe_mode
A4	C23	mcbsp3_fsx	uart2_rx			gpio_143			safe_mode
A5	F20	uart2_cts	mcbsp3_dx	gpt9_pwm_evt		gpio_144			safe_mode
B5	F19	uart2_rts	mcbsp3_dr	gpt10_pwm_evt		gpio_145			safe_mode
D6	E24	uart2_tx	mcbsp3_clkx	gpt11_pwm_evt		gpio_146			safe_mode
C6	E23	uart2_rx	mcbsp3_fsx	gpt8_pwm_evt		gpio_147			safe_mode
C22	AA19	uart1_tx				gpio_148			safe_mode
C21	Y19	uart1_rts				gpio_149			safe_mode
C19	Y20	uart1_cts				gpio_150			safe_mode
C20	W20	uart1_rx		mcbsp1_clkr	mcspi4_clk	gpio_151			safe_mode
A3	B23	mcbsp4_clkx				gpio_152		mm_fsusb3_txse0	safe_mode
B3	A23	mcbsp4_dr				gpio_153		mm_fsusb3_rxrcv	safe_mode
A2	B22	mcbsp4_dx				gpio_154		mm_fsusb3_txdat	safe_mode
B2	A22	mcbsp4_fsx				gpio_155		mm_fsusb3_txen_n	safe_mode
B11	R25	mcbsp1_clkr	mcspi4_clk			gpio_156			safe_mode
D11	P21	mcbsp1_fsr				gpio_157			safe_mode

Copyright © 2009–2014, Texas Instruments Incorporated

Table 4-3. Multiplexing Characteristics (continued)

ZER	ZCN	MODE 0	MODE 1	MODE 2	MODE 3	MODE 4	MODE 5	MODE 6	MODE 7
C10	P22	mcbsp1_dx	mcspi4_simo	mcbsp3_dx		gpio_158			safe_mode
C9	P23	mcbsp1_dr	mcspi4_somi	mcbsp3_dr		gpio_159			safe_mode
E11	P25	mcbsp_clks				gpio_160	uart1_cts		safe_mode
C11	P24	mcbsp1_fsx	mcspi4_cs0	mcbsp3_fsx		gpio_161			safe_mode
C8	N24	mcbsp1_clkx		mcbsp3_clkx		gpio_162			safe_mode
W15	N2	uart3_cts_rctx				gpio_163			safe_mode
W13	N3	uart3_rts_sd				gpio_164			safe_mode
AA13	P1	uart3_rx_irrx				gpio_165			safe_mode
Y13	P2	uart3_tx_irtx				gpio_166			
A6	F25	usb0_dp(1)	uart3_tx_irtx						
B6	F24	usb0_dm(1)	uart3_rx_irrx						
C7	G24	usb0_vbus							
B7	G25	usb0_id							
A7	E25	usb0_drvvbus		uart3_tx_irtx		gpio_125			safe_mode
AB15	V2	hecc1_txd		uart3_rx_irrx		gpio_130			safe_mode
AB16	V3	hecc1_rxd		uart3_rts_sd		gpio_131			safe_mode
AA17	V4	i2c1_scl							
AB17	V5	i2c1_sda							
Y17	W1	i2c2_scl				gpio_168			safe_mode
Y16	W2	i2c2_sda				gpio_183			safe_mode
W16	W4	i2c3_scl				gpio_184			safe_mode
W17	W5	i2c3_sda				gpio_185			safe_mode
B9	L25	hdq_sio	sys_altclk	i2c2_sccbe	i2c3_sccbe	gpio_170			safe_mode
K22	AE14	mcspi1_clk	mmc2_dat4			gpio_171			safe_mode
K19	AD15	mcspi1_simo	mmc2_dat5			gpio_172			safe_mode
J18	AC15	mcspi1_somi	mmc2_dat6			gpio_173			safe_mode
K18	AB15	mcspi1_cs0	mmc2_dat7			gpio_174			safe_mode
J20	AD14	mcspi1_cs1			mmc3_cmd	gpio_175			safe_mode
J19	AE15	mcspi1_cs2			mmc3_clk	gpio_176			safe_mode
J21	AE16	mcspi1_cs3			hsusb2_data2	gpio_177	mm_fsusb2_txdat		safe_mode
J22	AD16	mcspi2_clk			hsusb2_data7	gpio_178			safe_mode
H20	AC16	mcspi2_simo	gpt9_pwm_evt		hsusb2_data4	gpio_179			safe_mode
H22	AB16	mcspi2_somi	gpt10_pwm_evt		hsusb2_data5	gpio_180			safe_mode
H21	AA16	mcspi2_cs0	gpt11_pwm_evt		hsusb2_data6	gpio_181			safe_mode
H19	AE17	mcspi2_cs1	gpt8_pwm_evt		hsusb2_data3	gpio_182	mm_fsusb2_txen_n		safe_mode
AB18	Y1	sys_nirq				gpio_0			safe_mode
E10	M25	sys_clkout2				gpio_186			safe_mode
G22	AD17	etk_clk	mcbsp5_clkx	mmc3_clk	hsusb1_stp	gpio_12			hw_dbg0
G21	AE18	etk_ctl		mmc3_cmd	hsusb1_clk	gpio_13	mm_fsusb1_rxdp		hw_dbg1
G20	AD18	etk_d0	mcspi3_simo	mmc3_dat4	hsusb1_data0	gpio_14	mm_fsusb1_rxrcv		hw_dbg2
F22	AC18	etk_d1	mcspi3_somi		hsusb1_data1	gpio_15	mm_fsusb1_txse0		hw_dbg3
F20	AB18	etk_d2	mcspi3_cs0		hsusb1_data2	gpio_16	mm_fsusb1_txdat		hw_dbg4
G19	AA18	etk_d3	mcspi3_clk	mmc3_dat3	hsusb1_data7	gpio_17			hw_dbg5
E19	Y18	etk_d4	mcbsp5_dr	mmc3_dat0	hsusb1_data4	gpio_18			hw_dbg6
F21	AE19	etk_d5	mcbsp5_fsx	mmc3_dat1	hsusb1_data5	gpio_19			hw_dbg7
F19	AD19	etk_d6	mcbsp5_dx	mmc3_dat2	hsusb1_data6	gpio_20			hw_dbg8
E21	AB19	etk_d7	mcspi3_cs1	mmc3_dat7	hsusb1_data3	gpio_21	mm_fsusb1_txen_n		hw_dbg9
D22	AE20	etk_d8		mmc3_dat6	hsusb1_dir	gpio_22			hw_dbg10
D21	AD20	etk_d9		mmc3_dat5	hsusb1_nxt	gpio_23	mm_fsusb1_rxdm		hw_dbg11
E22	AC20	etk_d10		uart1_rx	hsusb2_clk	gpio_24			hw_dbg12
E20	AB20	etk_d11	mcspi3_clk		hsusb2_stp	gpio_25	mm_fsusb2_rxdp		hw_dbg13
E18	AE21	etk_d12			hsusb2_dir	gpio_26			hw_dbg14
D20	AD21	etk_d13			hsusb2_nxt	gpio_27	mm_fsusb2_rxdm		hw_dbg15

(1) This mux selection is controlled by CONTROL_DEVCONF2 register.

Copyright © 2009–2014, Texas Instruments Incorporated

Table 4-3. Multiplexing Characteristics (continued)

ZER	ZCN	MODE 0	MODE 1	MODE 2	MODE 3	MODE 4	MODE 5	MODE 6	MODE 7
D19	AC21	etk_d14			hsusb2_data0	gpio_28	mm_fsusb2_rxrcv		hw_dbg16
D18	AE22	etk_d15			hsusb2_data1	gpio_29	mm_fsusb2_txse 0		hw_dbg17
A8	K24	sys_32k							
A10	K25	sys_xtalin							
A9	H25	sys_xtalout							
B8	M24	sys_clkreq				gpio_1			
AA18	Y2	sys_nrespwron							
Y18	Y3	sys_nreswarm				gpio_30			
AB19	Y4	sys_boot0				gpio_2			
AB20	AA1	sys_boot1				gpio_3			
W18	AA2	sys_boot2				gpio_4			
AA19	AA3	sys_boot3				gpio_5			
V18	AB1	sys_boot4	mmc2_dir_dat2			gpio_6			
Y19	AB2	sys_boot5	mmc2_dir_dat3			gpio_7			
W19	AC1	sys_boot6				gpio_8			
AA20	AC2	sys_boot7							
Y20	AC3	sys_boot8							
E9	N25	sys_clkout1				gpio_10			safe_mode
D13	U24	jtag_ntrst							
E14	U25	jtag_tck							
C12	T21	jtag_rtck							
A12	T22	jtag_tms_tmsc							
B12	T23	jtag_tdi							
D12	T24	jtag_tdo							
E13	T25	jtag_emu0				gpio_11			
E12	R24	jtag_emu1				gpio_31			
M2	B12	ddr_padref							

Copyright © 2009–2014, Texas Instruments Incorporated

4.4 Signal Description

Many signals are available on multiple pins according to the software configuration of the pin multiplexing options.

1. **SIGNAL NAME:** The signal name
2. **DESCRIPTION:** Description of the signal
3. **TYPE:** Type = Ball type for this specific function:
   - I = Input
   - O = Output
   - Z = High-impedance
   - D = Open Drain
   - DS = Differential
   - A = Analog
4. **BALL:** Associated ball location
5. **SUBSYSTEM PIN MULTIPLEXING:** Contains a list of the pin multiplexing options at the module/subsystem level. The pin function is selected at the module/system level.

   Note: The Subsystem Multiplexing Signals are not described in Table 4-1 and Table 4-2.

4.4.1 External Memory Interfaces

Table 4-4. External Memory Interfaces - GPMC Signals Description

SIGNAL NAME[1]	DESCRIPTION[2]	TYPE[3]	ZCN BALL[4]	ZER BALL[4]	SUBSYSTEM PIN MULTIPLEXING [5]
gpmc_a1	GPMC Address bit 1	O	E3/G5	W5/AA7	gpmc_a17
gpmc_a2	GPMC Address bit 2	O	E2/G4	Y5/Y7	gpmc_a18
gpmc_a3	GPMC Address bit 3	O	E1/G3	AB4/W7	gpmc_a19
gpmc_a4	GPMC Address bit 4	O	F7/G2	AA5/AA9	gpmc_a20
gpmc_a5	GPMC Address bit 5	O	F6/G1	AB5/Y8	gpmc_a21
gpmc_a6	GPMC Address bit 6	O	F4/H2	AB6/AA8	gpmc_a22
gpmc_a7	GPMC Address bit 7	O	F3/H1	AA6/AB8	gpmc_a23
gpmc_a8	GPMC Address bit 8	O	F2/J5	W6/W8	gpmc_a24
gpmc_a9	GPMC Address bit 9	O	F1/J4	AB7/W10	gpmc_a25
gpmc_a10	GPMC Address bit 10	O	G6/J3	Y6/AB9	gpmc_a26
gpmc_a11	GPMC Address bit 11 multiplexed on gpmc_d10	O	J2	AB10	
gpmc_a12	GPMC Address bit12 multiplexed on gpmc_d11	O	J1	W9	
gpmc_a13	GPMC Address bit13 multiplexed on gpmc_d12	O	K4	AA10	
gpmc_a14	GPMC Address bit 14multiplexed on gpmc_d13	O	K3	Y9	
gpmc_a15	GPMC Address bit15 multiplexed on gpmc_d14	O	K2	V10	
gpmc_a16	GPMC Address bit16 multiplexed on gpmc_d15	O	K1	V9	
gpmc_a17	GPMC Address bit17 multiplexed on gpmc_a1	O	E3	W5	

Copyright © 2009–2014, Texas Instruments Incorporated

Table 4-4. External Memory Interfaces - GPMC Signals Description (continued)

SIGNAL NAME[1]	DESCRIPTION[2]	TYPE[3]	ZCN BALL[4]	ZER BALL[4]	SUBSYSTEM PIN MULTIPLEXING [5]
gpmc_a18	GPMC Address bit18 multiplexed on gpmc_a2	O	E2	Y5	
gpmc_a19	GPMC Address bit19 multiplexed on gpmc_a3	O	E1	AB4	
gpmc_a20	GPMC Address bit20 multiplexed on gpmc_a4	O	F7	AA5	
gpmc_a21	GPMC Address bit21 multiplexed on gpmc_a5	O	F6	AB5	
gpmc_a22	GPMC Address bit22 multiplexed on gpmc_a6	O	F4	AB6	
gpmc_a23	GPMC Address bit23 multiplexed on gpmc_a7	O	F3	AA6	
gpmc_a24	GPMC Address bit24 multiplexed on gpmc_a8	O	F2	W6	
gpmc_a25	GPMC Address bit25 multiplexed on gpmc_a9	O	F1	AB7	
gpmc_a26	GPMC Address bit26 multiplexed on gpmc_a10	O	G6	Y6	
gpmc_d0	GPMC Data bit 0	IO	G5	AA7	gpmc_a1/gpmc_d0
gpmc_d1	GPMC Data bit 1	IO	G4	Y7	gpmc_a2/gpmc_d1
gpmc_d2	GPMC Data bit 2	IO	G3	W7	gpmc_a3/gpmc_d2
gpmc_d3	GPMC Data bit 3	IO	G2	AA9	gpmc_a4/gpmc_d3
gpmc_d4	GPMC Data bit 4	IO	G1	Y8	gpmc_a5/gpmc_d4
gpmc_d5	GPMC Data bit 5	IO	H2	AA8	gpmc_a6/gpmc_d5
gpmc_d6	GPMC Data bit 6	IO	H1	AB8	gpmc_a7/gpmc_d6
gpmc_d7	GPMC Data bit 7	IO	J5	W8	gpmc_a8/gpmc_d7
gpmc_d8	GPMC Data bit 8	IO	J4	W10	gpmc_a9/gpmc_d8
gpmc_d9	GPMC Data bit 9	IO	J3	AB9	gpmc_a10/gpmc_d9
gpmc_d10	GPMC Data bit 10	IO	J2	AB10	gpmc_a11/gpmc_d10
gpmc_d11	GPMC Data bit 11	IO	J1	W9	gpmc_a12/gpmc_d11
gpmc_d12	GPMC Data bit 12	IO	K4	AA10	gpmc_a13/gpmc_d12
gpmc_d13	GPMC Data bit 13	IO	K3	Y9	gpmc_a14/gpmc_d13
gpmc_d14	GPMC Data bit 14	IO	K2	V10	gpmc_a15/gpmc_d14
gpmc_d15	GPMC Data bit 15	IO	K1	V9	gpmc_a16/gpmc_d15
gpmc_ncs0	GPMC Chip Select 0	O	L2	Y10	
gpmc_ncs1	GPMC Chip Select 1	O	L1	Y11	
gpmc_ncs2	GPMC Chip Select 2	O	M4	Y12	
gpmc_ncs3	GPMC Chip Select 3	O	M3	V12	
gpmc_ncs4	GPMC Chip Select 4	O	M2	AA11	
gpmc_ncs5	GPMC Chip Select 5	O	M1	W12	
gpmc_ncs6	GPMC Chip Select 6	O	N5	AA12	
gpmc_ncs7	GPMC Chip Select 7	O	N4	V11	
gpmc_clk	GPMC clock	O	N1	AB13	

Copyright © 2009–2014, Texas Instruments Incorporated

Table 4-4. External Memory Interfaces - GPMC Signals Description (continued)

SIGNAL NAME[1]	DESCRIPTION[2]	TYPE[3]	ZCN BALL[4]	ZER BALL[4]	SUBSYSTEM PIN MULTIPLEXING [5]
gpmc_nadv_ale	Address Valid or Address Latch Enable	O	R1	AA14	
gpmc_noe	Output Enable	O	R2	AB14	
gpmc_nwe	Write Enable	O	R3	AA15	
gpmc_nbe0_cle	Lower Byte Enable. Also used for Command Latch Enable	O	R4	W11	
gpmc_nbe1	Upper Byte Enable	O	T1	Y15	
gpmc_nwp	Flash Write Protect	O	T2	W14	
gpmc_wait0	External indication of wait	I	T3	V13	
gpmc_wait1	External indication of wait	I	T4	AA16	
gpmc_wait2	External indication of wait	I	T5	Y14	
gpmc_wait3	External indication of wait	I	U1	V14	

Table 4-5. External Memory Interfaces - SDRC Signals Description

SIGNAL NAME[1]	DESCRIPTION [2]	TYPE [3]	ZCN BALL [4]	ZER BALL [4]
sdrc_d0	SDRAM data bit 0	IO	B21	E3
sdrc_d1	SDRAM data bit 1	IO	A21	D3
sdrc_d2	SDRAM data bit2	IO	D20	C3
sdrc_d3	SDRAM data bit 3	IO	C20	C2
sdrc_d4	SDRAM data bit 4	IO	E19	F3
sdrc_d5	SDRAM data bit 5	IO	D19	D2
sdrc_d6	SDRAM data bit 6	IO	C19	C1
sdrc_d7	SDRAM data bit 7	IO	B19	D1
sdrc_d8	SDRAM data bit 8	IO	B18	G2
sdrc_d9	SDRAM data bit 9	IO	D17	G3
sdrc_d10	SDRAM data bit 10	IO	C17	H3
sdrc_d11	SDRAM data bit 11	IO	D16	G4
sdrc_d12	SDRAM data bit 12	IO	C16	H4
sdrc_d13	SDRAM data bit 13	IO	B16	G1
sdrc_d14	SDRAM data bit 14	IO	A16	J3
sdrc_d15	SDRAM data bit 15	IO	A15	J1
sdrc_d16	SDRAM data bit 16	IO	A7	T3
sdrc_d17	SDRAM data bit 17	IO	B7	U3
sdrc_d18	SDRAM data bit 18	IO	D7	U4
sdrc_d19	SDRAM data bit 19	IO	E7	V4
sdrc_d20	SDRAM data bit 20	IO	C6	V1
sdrc_d21	SDRAM data bit 21	IO	D6	V2
sdrc_d22	SDRAM data bit 22	IO	B5	V5
sdrc_d23	SDRAM data bit 23	IO	C5	V3
sdrc_d24	SDRAM data bit 24	IO	B4	W3
sdrc_d25	SDRAM data bit 25	IO	A3	W4
sdrc_d26	SDRAM data bit 26	IO	B3	Y3

Copyright © 2009–2014, Texas Instruments Incorporated

Table 4-5. External Memory Interfaces - SDRC Signals Description (continued)

SIGNAL NAME[1]	DESCRIPTION [2]	TYPE [3]	ZCN BALL [4]	ZER BALL [4]
sdrc_d27	SDRAM data bit 27	IO	C3	Y4
sdrc_d28	SDRAM data bit 28	IO	C2	AA2
sdrc_d29	SDRAM data bit 29	IO	D2	AA3
sdrc_d30	SDRAM data bit 30	IO	B1	AA4
sdrc_d31	SDRAM data bit 31	IO	C1	AB2
sdrc_ba0	SDRAM bank select 0	O	A12	L4
sdrc_ba1	SDRAM bank select 1	O	C13	K5
sdrc_ba2	SDRAM bank select 2	O	D13	J5
sdrc_a0	SDRAM address bit 0	O	A11	M3
sdrc_a1	SDRAM address bit 1	O	B11	M4
sdrc_a2	SDRAM address bit 2	O	C11	M5
sdrc_a3	SDRAM address bit 3	O	D11	N3
sdrc_a4	SDRAM address bit 4	O	E11	N2
sdrc_a5	SDRAM address bit 5	O	A10	N4
sdrc_a6	SDRAM address bit 6	O	B10	P3
sdrc_a7	SDRAM address bit 7	O	C10	P2
sdrc_a8	SDRAM address bit 8	O	D10	P1
sdrc_a9	SDRAM address bit 9	O	E10	P4
sdrc_a10	SDRAM address bit 10	O	A9	R1
sdrc_a11	SDRAM address bit 11	O	B9	R2
sdrc_a12	SDRAM address bit 12	O	A8	R3
sdrc_a13	SDRAM address bit 13	O	B8	R4
sdrc_a14	SDRAM address bit 14	O	D8	T2
sdrc_ncs0	Chip select 0	O	E13	J4
sdrc_ncs1	Chip select 1	O	A14	K4
sdrc_clk	Clock	O	A13	L1
sdrc_nclk	Clock Invert	O	B13	L2
sdrc_cke0	Clock Enable 0	O	D14	K3
sdrc_nras	SDRAM Row Access	O	C14	K1
sdrc_ncas	SDRAM column address strobe	O	E14	L3
sdrc_nwe	SDRAM write enable	O	B14	K2
sdrc_dm0	Data Mask 0	O	C21	F4
sdrc_dm1	Data Mask 1	O	B15	J2
sdrc_dm2	Data Mask 2	O	E8	T4
sdrc_dm3	Data Mask 3	O	D1	AB3
sdrc_strben0	PCB layout trace loop 0 pin 0	A	A19	F2
sdrc_strben_dly0	PCB layout trace loop 0 pin 1	A	A18	F1
sdrc_strben1	PCB layout trace loop 1 pin 0	A	A5	W1
sdrc_strben_dly1	PCB layout trace loop 1 pin 1	A	A4	W2
sdrc_odt	On-die termination output for sdrc_ncs0 only	O	C8	T1
sdrc_dqs0p	Data Strobe 0	IO	B20	E2
sdrc_dqs0n	Data Strobe 0	IO	A20	E1
sdrc_dqs1p	Data Strobe 1	IO	B17	H2

Copyright © 2009–2014, Texas Instruments Incorporated

Table 4-5. External Memory Interfaces - SDRC Signals Description (continued)

SIGNAL NAME[1]	DESCRIPTION [2]	TYPE [3]	ZCN BALL [4]	ZER BALL [4]
sdrc_dqs1n	Data Strobe 1	IO	A17	H1
sdrc_dqs2p	Data Strobe 2	IO	A6	U1
sdrc_dqs2n	Data Strobe 2	IO	B6	U2
sdrc_dqs3p	Data Strobe 3	IO	A2	Y1
sdrc_dqs3n	Data Strobe 3	IO	B2	Y2
ddr_padref	Impedance control for DDR2 output. This pin must be connected to ground via a 50-ohm (± 2%) resistor.	A	B12	M2
VREFSSTL	VREFSSTL is .5 * VDDS = 0.9V for DDR data PHY0 reference voltage input	IO	F14	L5

4.4.2 Video Interfaces

Table 4-6. Video Interfaces - CCDC Signals Description

SIGNAL NAME[1]	DESCRIPTION [2]	TYPE [3]	ZCN BALL [4]	ZER BALL [4]	SYSTEM MUX MODE(1)
ccdc_pclk	CCDC pixel clock	IO	AD2	AB21	mode0
ccdc_field	CCDC field ID signal	IO	AD1	AA21	mode0
ccdc_hd	CCDC horizontal sync	IO	AE2	Y21	mode0
ccdc_vd	CCDC vertical sync	IO	AD3	Y22	mode0
ccdc_wen	CCDC write enable	I	AE3	W21	mode0
ccdc_data0	CCDC data bit 0	I	AD4	W22	mode0
ccdc_data1	CCDC data bit 1	I	AE4	W20	mode0
ccdc_data2	CCDC data bit 2	I	AC5	V21	mode0
ccdc_data3	CCDC data bit 3	I	AD5	V19	mode0
ccdc_data4	CCDC data bit 4	I	AE5	V22	mode0
ccdc_data5	CCDC data bit 5	I	Y6	U20	mode0
ccdc_data6	CCDC data bit 6	I	AB6	V20	mode0
ccdc_data7	CCDC data bit 7	I	AC6	U19	mode0
ccdc_data8	CCDC data bit 8	I	AE6	U21	mode1
ccdc_data9	CCDC data bit 9	I	AD6	U22	mode1
ccdc_data10	CCDC data bit 10	I	Y7	T19	mode1
ccdc_data11	CCDC data bit 11	I	AA7	T20	mode1
ccdc_data12	CCDC data bit 12	I	AB7	T21	mode1
ccdc_data13	CCDC data bit 13	I	AC7	R22	mode1
ccdc_data14	CCDC data bit 14	I	AD7	T22	mode1
ccdc_data15	CCDC data bit 15	I	AE7	R20	mode1

(1) See *Multiplexing Characteristics* table for more information.

Table 4-7. Video Interfaces - DSS Signals Description

SIGNAL NAME[1]	DESCRIPTION [2]	TYPE [3]	ZCN BALL [4]	ZER BALL [4]
dss_pclk	LCD Pixel Clock	O	AE23	B22
dss_hsync	LCD Horizontal Synchronization	O	AD22	B21
dss_vsync	LCD Vertical Synchronization	O	AD23	B20

Copyright © 2009–2014, Texas Instruments Incorporated

Table 4-7. Video Interfaces - DSS Signals Description (continued)

SIGNAL NAME[1]	DESCRIPTION [2]	TYPE [3]	ZCN BALL [4]	ZER BALL [4]
dss_acbias	AC bias control (STN) or pixel data enable (TFT) output	O	AE24	B19
dss_data0	LCD Pixel Data bit 0	IO	AD24	A20
dss_data1	LCD Pixel Data bit 1	IO	AD25	A19
dss_data2	LCD Pixel Data bit 2	IO	AC23	A18
dss_data3	LCD Pixel Data bit 3	IO	AC24	B18
dss_data4	LCD Pixel Data bit 4	IO	AC25	A17
dss_data5	LCD Pixel Data bit 5	IO	AB24	C18
dss_data6	LCD Pixel Data bit 6	IO	AB25	D17
dss_data7	LCD Pixel Data bit 7	IO	AA23	B16
dss_data8	LCD Pixel Data bit 8	IO	AA24	B17
dss_data9	LCD Pixel Data bit 9	IO	AA25	C17
dss_data10	LCD Pixel Data bit 10	IO	Y22	C16
dss_data11	LCD Pixel Data bit 11	IO	Y23	D16
dss_data12	LCD Pixel Data bit 12	IO	Y24	D14
dss_data13	LCD Pixel Data bit 13	IO	Y25	A16
dss_data14	LCD Pixel Data bit 14	IO	W21	D15
dss_data15	LCD Pixel Data bit 15	IO	W22	B15
dss_data16	LCD Pixel Data bit 16	IO	W23	A15
dss_data17	LCD Pixel Data bit 17	IO	W24	A14
dss_data18	LCD Pixel Data bit 18	IO	W25	C13
dss_data19	LCD Pixel Data bit 19	IO	V24	C15
dss_data20	LCD Pixel Data bit 20	O	V25	A13
dss_data21	LCD Pixel Data bit 21	O	U21	B13
dss_data22	LCD Pixel Data bit 22	O	U22	C14
dss_data23	LCD Pixel Data bit 23	O	U23	B14

Table 4-8. Video Interfaces – RFBI Signals Description

SIGNAL NAME [1]	DESCRIPTION [2]	TYPE [3]	ZCN BALL [4]	ZER BALL [4]	SUBSYSTEM PIN MULTIPLEXING [5]
rfbi_a0	RFBI command/data control	O	AE24	B19	dss_acbias
rfbi_cs0	1st LCD chip select	O	AD22	B21	dss_hsync
rfbi_da0	RFBI data bus 0	IO	AD24	A20	dss_data0
rfbi_da1	RFBI data bus 1	IO	AD25	A19	dss_data1
rfbi_da2	RFBI data bus 2	IO	AC23	A18	dss_data2
rfbi_da3	RFBI data bus 3	IO	AC24	B18	dss_data3
rfbi_da4	RFBI data bus 4	IO	AC25	A17	dss_data4
rfbi_da5	RFBI data bus 5	IO	AB24	C18	dss_data5
rfbi_da6	RFBI data bus 6	IO	AB25	D17	dss_data6
rfbi_da7	RFBI data bus 7	IO	AA23	B16	dss_data7
rfbi_da8	RFBI data bus 8	IO	AA24	B17	dss_data8
rfbi_da9	RFBI data bus 9	IO	AA25	C17	dss_data9
rfbi_da10	RFBI data bus 10	IO	Y22	C16	dss_data10
rfbi_da11	RFBI data bus 11	IO	Y23	D16	dss_data11
rfbi_da12	RFBI data bus 12	IO	Y24	D14	dss_data12
rfbi_da13	RFBI data bus 13	IO	Y25	A16	dss_data13

Copyright © 2009–2014, Texas Instruments Incorporated

Table 4-8. Video Interfaces – RFBI Signals Description (continued)

SIGNAL NAME [1]	DESCRIPTION [2]	TYPE [3]	ZCN BALL [4]	ZER BALL [4]	SUBSYSTEM PIN MULTIPLEXING [5]
rfbi_da14	RFBI data bus 14	IO	W21	D15	dss_data14
rfbi_da15	RFBI data bus 15	IO	W22	B15	dss_data15
rfbi_rd	Read enable for RFBI	O	AE23	B22	dss_pclk
rfbi_wr	Write Enable for RFBI	O	AD23	B20	dss_vsync
rfbi_te_vsync0	tearing effect removal and Vsync input from 1st LCD	I	W23	A15	dss_data16
rfbi_hsync0	Hsync for 1st LCD	I	W24	A14	dss_data17
rfbi_te_vsync1	tearing effect removal and Vsync input from 2nd LCD	I	W25	C13	dss_data18
rfbi_hsync1	Hsync for 2nd LCD	I	V24	C15	dss_data19
rfbi_cs1	2nd LCD chip select	O	V25	A13	dss_data20

Table 4-9. Video Interfaces – TV Signals Description

SIGNAL NAME [1]	DESCRIPTION [2]	TYPE [3]	ZCN BALL [4]	ZER BALL [4]
tv_out1	TV analog output Composite: tv_out1	O	K21	NA
tv_out2	TV analog output S-VIDEO: tv_out2	O	H24	NA
tv_vfb1	tv_vfb1: Feedback through external resistor to composite	O	K20	NA
tv_vfb2	tv_vfb2: Feedback through external resistor to S-VIDEO	O	H23	NA
tv_vref	External capacitor	I	H20	NA

4.4.3 Serial Communication Interfaces

Table 4-10. HDQ Signals Description

SIGNAL NAME [1]	DESCRIPTION [2]	TYPE [3]	ZCN BALL [4]	ZER BALL [4]
hdq_sio	Bidirectional HDQ 1-Wire control and data Interface. Output is open drain.	IO	L25	B9

Table 4-11. Serial Communication Interfaces – I2C Signals Description (I2C1)

SIGNAL NAME [1]	DESCRIPTION [2]	TYPE [3]	ZCN BALL [4]	ZER BALL [4]
i2c1_scl	I2C Master Serial clock. Output is open drain.	IOD	V4	AA17
i2c1_sda	I2C Serial Bidirectional Data. Output is open drain.	IOD	V5	AB17

Table 4-12. Serial Communication Interfaces - I2C Signals Description (I2C2)

SIGNAL NAME [1]	DESCRIPTION [2]	TYPE [3]	ZCN BALL [4]	ZER BALL [4]
i2c2_scl	I2C Master Serial clock. Output is open drain.	IOD	W1	Y17
i2c2_sda	I2C Serial Bidirectional Data. Output is open drain.	IOD	W2	Y16

Copyright © 2009–2014, Texas Instruments Incorporated

Table 4-13. Serial Communication Interfaces - I2C Signals Description (I2C3)

SIGNAL NAME [1]	DESCRIPTION [2]	TYPE [3]	ZCN BALL [4]	ZER BALL [4]
i2c3_scl	I2C Master Serial clock. Output is open drain.	IOD	W4	W16
i2c3_sda	I2C Serial Bidirectional Data. Output is open drain.	IOD	W5	W17

Table 4-14. Serial Communication Interfaces – McBSP LP Signals Description

SIGNAL NAME [1]	DESCRIPTION [2]	TYPE [3]	ZCN BALL [4]	ZER BALL [4]
MULTICHANNEL BUFFERED SERIAL PORT (McBSP LP 1)				
mcbsp1_dr	Received serial data	I	P23	C9
mcbsp1_clkr	Receive Clock	IO	R25	B11
mcbsp1_fsr	Receive frame synchronization	IO	P21	D11
mcbsp1_dx	Transmitted serial data	IO	P22	C10
mcbsp1_clkx	Transmit clock	IO	N24	C8
mcbsp1_fsx	Transmit frame synchronization	IO	P24	C11
mcbsp_clks	External clock input (shared by McBSP1, 2, 3, 4, and 5)	I	P25	E11
MULTICHANNEL BUFFERED SERIAL PORT (McBSP LP 2)				
mcbsp2_dr	Received serial data	I	B25	C5
mcbsp2_dx	Transmitted serial data	IO	D24	E4
mcbsp2_clkx	Combined serial clock	IO	C25	D5
mcbsp2_fsx	Combined frame synchronization	IO	D25	E5
MULTICHANNEL BUFFERED SERIAL PORT (McBSP LP 3)				
mcbsp3_dr	Received serial data	I	C24	B4
mcbsp3_dx	Transmitted serial data	IO	B24	C4
mcbsp3_clkx	Combined serial clock	IO	A24	D4
mcbsp3_fsx	Combined frame synchronization	IO	C23	A4
MULTICHANNEL BUFFERED SERIAL PORT (McBSP LP 4)				
mcbsp4_dr	Received serial data	I	A23	B3
mcbsp4_dx	Transmitted serial data	IO	B22	A2
mcbsp4_clkx	Combined serial clock	IO	B23	A3
mcbsp4_fsx	Combined frame synchronization	IO	A22	B2
MULTICHANNEL BUFFERED SERIAL PORT (McBSP LP 5)				
mcbsp5_dr	Received serial data	I	Y18	E19
mcbsp5_dx	Transmitted serial data	IO	AD19	F19
mcbsp5_clkx	Combined serial clock	IO	AD17	G22
mcbsp5_fsx	Combined frame synchronization	IO	AE19	F21

Table 4-15. Serial Communication Interfaces – McSPI Signals Description

SIGNAL NAME [1]	DESCRIPTION [2]	TYPE [3]	ZCN BALL [4]	ZER BALL [4]
MULTICHANNEL SERIAL PORT INTERFACE (McSPI1)				
mcspi1_clk	SPI Clock	IO	AE14	K22

Copyright © 2009–2014, Texas Instruments Incorporated

Table 4-15. Serial Communication Interfaces – McSPI Signals Description (continued)

SIGNAL NAME [1]	DESCRIPTION [2]	TYPE [3]	ZCN BALL [4]	ZER BALL [4]
mcspi1_simo	Slave data in, master data out	IO	AD15	K19
mcspi1_somi	Slave data out, master data in	IO	AC15	J18
mcspi1_cs0	SPI Enable 0, polarity configured by software	IO	AB15	K18
mcspi1_cs1	SPI Enable 1, polarity configured by software	O	AD14	J20
mcspi1_cs2	SPI Enable 2, polarity configured by software	O	AE15	J19
mcspi1_cs3	SPI Enable 3, polarity configured by software	O	AE16	J21
MULTICHANNEL SERIAL PORT INTERFACE (McSPI2)				
mcspi2_clk	SPI Clock	IO	AD16,AC9	J22
mcspi2_simo	Slave data in, master data out	IO	AC16,AD9	H20
mcspi2_somi	Slave data out, master data in	IO	AB16,AE9	H22
mcspi2_cs0	SPI Enable 0, polarity configured by software	IO	AA16,AA10	H21
mcspi2_cs1	SPI Enable 1, polarity configured by software	O	AE17	H19
MULTICHANNEL SERIAL PORT INTERFACE (McSPI3)				
mcspi3_clk	SPI Clock	IO	W25,AD11,AA18	C13, M21, G19, E20
mcspi3_simo	Slave data in, master data out	IO	V24,AE11,AD18	C15, M20, G20
mcspi3_somi	Slave data out, master data in	IO	V25, AB12, AC18	A13, K20, F22
mcspi3_cs0	SPI Enable 0, polarity configured by software	IO	U21,AE12,AB18	B13, K21, F20
mcspi3_cs1	SPI Enable 1, polarity configured by software	O	U22, AD12, AB19	C14, M18, E21
MULTICHANNEL SERIAL PORT INTERFACE (McSPI4)				
mcspi4_clk	SPI Clock	IO	W20, R25	C20, B11
mcspi4_simo	Slave data in, master data out	IO	P22	C10
mcspi4_somi	Slave data out, master data in	IO	P23	C9
mcspi4_cs0	SPI Enable 0, polarity configured by software	IO	P24	C11

Table 4-16. Serial Communication Interfaces – HECC Signals Description

SIGNAL NAME [1]	DESCRIPTION [2]	TYPE [3]	ZCN BALL [4]	ZER BALL [4]
hecc1_txd	Transmit serial data pin	O	V2	AB15
hecc1_rxd	Receive serial data pin	I	V3	AB16

Table 4-17. Serial Communication Interfaces – EMAC (RMII) Signals Description

SIGNAL NAME [1]	DESCRIPTION [2]	TYPE [3]	ZCN BALL [4]	ZER BALL [4]
rmii_mdio_data	Management data I/O	IO	AE6	U21
rmii_mdio_clk	Management data clock	O	AD6	U22
rmii_rxd0	EMAC receive data pin 0	I	Y7	T19
rmii_rxd1	EMAC receive data pin 1	I	AA7	T20

Copyright © 2009–2014, Texas Instruments Incorporated

Table 4-17. Serial Communication Interfaces – EMAC (RMII) Signals Description (continued)

SIGNAL NAME [1]	DESCRIPTION [2]	TYPE [3]	ZCN BALL [4]	ZER BALL [4]
rmii_crs_dv	EMAC carrier sense/receive data valid	I	AB7	T21
rmii_rxer	EMAC receive error	I	AC7	R22
rmii_txd0	EMAC transmit data pin 0	O	AD7	T22
rmii_txd1	EMAC transmit data pin 1	O	AE7	R20
rmii_txen	EMAC transmit enable	O	AD8	R19
rmii_50mhz_clk	EMAC RMII 50 MHz clock	I	AE8	R21

Table 4-18. Serial Communication Interfaces – UARTs Signals Description

SIGNAL NAME [1]	DESCRIPTION [2]	TYPE [3]	ZCN BALL [4]	ZER BALL [4]
UNIVERSAL ASYNCHRONOUS RECEIVER/TRANSMITTER (UART1)				
uart1_cts	UART1 Clear To Send	I	AD24,Y20,P25	C19,A20,E11
uart1_rts	UART1 Request To Send	O	AD25,Y19	C21,A19
uart1_rx	UART1 Receive data	I	AA23,W20,AC20	C20,B16,E22
uart1_tx	UART1 Transmit data	O	AB25,AA19	C22,D17
UNIVERSAL ASYNCHRONOUS RECEIVER/TRANSMITTER (UART2)				
uart2_cts	UART2 Clear To Send	I	B24,F20	A5,C4
uart2_rts	UART2 Request To Send	O	C24,F19	B5,B4
uart2_rx	UART2 Receive data	I	C23,E23	C6,A4
uart2_tx	UART2 Transmit data	O	A24,E24	D6,D4
UNIVERSAL ASYNCHRONOUS RECEIVER/TRANSMITTER (UART3) / IrDA				
uart3_cts_rctx	UART3 Clear To Send (input), Remote TX (output)	IO	U1,N2	W15,V14
uart3_rts_sd	UART3 Request To Send , IR enable	O	N3,V3	W13AB16
uart3_rx_irrx	UART3 Receive data , IR and Remote RX	I	AC25,P1,F25,V2	AA13,A17,A6,AB15
uart3_tx_irtx	UART3 Transmit data , IR TX	O	AB24,P2,F24,E25	Y13,C18,B6,A7
UNIVERSAL ASYNCHRONOUS RECEIVER/TRANSMITTER (UART4)				
uart4_cts	UART4 Clear To Send	I	AD3,AD11	Y22,M21
uart4_rts	UART4 Request To Send	O	AE2,AE11	Y21,M20
uart4_rx	UART4 Receive data	I	T5,AE3,AC12	Y14,W21,L19
uart4_tx	UART4 Transmit data	O	T4,AD1,AB12	AA16,AA21,K20

Table 4-19. Serial Communication Interfaces – USB Signals Description

SIGNAL NAME [1]	DESCRIPTION [2]	TYPE [3]	ZCN BALL [4]	ZER BALL [4]
UNIVERSAL SERIAL BUS INTERFACE (USB0)				
usb0_dp	USB D+ (differential signal pair)	A	F25	A6
usb0_dm	USB D- (differential signal pair)	A	F24	B6
usb0_drvvbus	Digital output to control external supply	O	E25	A7
usb0_id	USB operating mode identification pin	A	G25	B7

Copyright © 2009–2014, Texas Instruments Incorporated

Table 4-19. Serial Communication Interfaces – USB Signals Description (continued)

SIGNAL NAME [1]	DESCRIPTION [2]	TYPE [3]	ZCN BALL [4]	ZER BALL [4]
usb0_vbus	For host or device mode operation, tie the VBUS/USB power signal to the USB connector. When used in OTG mode operation, tie VBUS to the external charge pump and to the VBUS signal on the USB connector.	A	G24	C7
MM_FSUSB3				
mm_fsusb3_rxdm	Vminus receive data (not used in 3- or 4-pin configurations)	IO	AE13	M19
mm_fsusb3_rxdp	Vplus receive data (not used in 3- or 4-pin configurations)	IO	AC13	L20
mm_fsusb3_rxrcv	Differential receiver signal input (not used in 3-pin mode)	IO	A23	B3
mm_fsusb3_txse0	Single-ended zero. Used as VM in 4-pin VP_VM mode.	IO	B23	A3
mm_fsusb3_txdat	USB data. Used as VP in 4-pin VP_VM mode.	IO	B22	A2
mm_fsusb3_txen_n	Transmit enable	IO	A22	B2
MM_FSUSB2				
mm_fsusb2_rxdm	Vminus receive data (not used in 3- or 4-pin configurations)	IO	AD21	D20
mm_fsusb2_rxdp	Vplus receive data (not used in 3- or 4-pin configurations)	IO	AB20	E20
mm_fsusb2_rxrcv	Differential receiver signal input (not used in 3-pin mode)	IO	AC21	D19
mm_fsusb2_txse0	Single-ended zero. Used as VM in 4-pin VP_VM mode.	IO	AE22	D18
mm_fsusb2_txdat	USB data. Used as VP in 4-pin VP_VM mode.	IO	AE16	J21
mm_fsusb2_txen_n	Transmit enable	IO	AE17	H19
MM_FSUSB1				
mm_fsusb1_rxdm	Vminus receive data (not used in 3- or 4-pin configurations)	IO	AD20	D21
mm_fsusb1_rxdp	Vplus receive data (not used in 3- or 4-pin configurations)	IO	AE18	G21
mm_fsusb1_rxrcv	Differential receiver signal input (not used in 3-pin mode)	IO	AD18	G20
mm_fsusb1_txse0	Single-ended zero. Used as VM in 4-pin VP_VM mode.	IO	AC18	F22
mm_fsusb1_txdat	USB data. Used as VP in 4-pin VP_VM mode.	IO	AB18	F20
mm_fsusb1_txen_n	Transmit enable	IO	AB19	E21
HSUSB2				

Copyright © 2009–2014, Texas Instruments Incorporated

Table 4-19. Serial Communication Interfaces – USB Signals Description (continued)

SIGNAL NAME [1]	DESCRIPTION [2]	TYPE [3]	ZCN BALL [4]	ZER BALL [4]
hsusb2_clk	Dedicated for external transceiver 60-MHz clock input from PHY	O	AC20	E22
hsusb2_stp	Dedicated for external transceiver Stop signal	O	AB20	E20
hsusb2_dir	Dedicated for external transceiver Data direction control from PHY	I	AE21	E18
hsusb2_nxt	Dedicated for external transceiver Next signal from PHY	I	AD21	D20
hsusb2_data0	Dedicated for external transceiver Bidirectional data bus	IO	AC21	D19
hsusb2_data1	Dedicated for external transceiver Bidirectional data bus	IO	AE22	D18
hsusb2_data2	Dedicated for external transceiver Bidirectional data bus	IO	AE16	J21
hsusb2_data3	Dedicated for external transceiver Bidirectional data bus	IO	AE17	H19
hsusb2_data4	Dedicated for external transceiver Bidirectional data bus additional signals for 12-pin ULPI operation.	IO	AC16	H20
hsusb2_data5	Dedicated for external transceiver Bidirectional data bus additional signals for 12-pin ULPI operation.	IO	AB16	H22
hsusb2_data6	Dedicated for external transceiver Bidirectional data bus additional signals for 12-pin ULPI operation.	IO	AA16	H21
hsusb2_data7	Dedicated for external transceiver Bidirectional data bus	IO	AD16	J22
HSUSB1				
hsusb1_clk	Dedicated for external transceiver 60-MHz clock input from PHY	O	AE18	G21
hsusb1_stp	Dedicated for external transceiver Stop signal	O	AD17	G22
hsusb1_dir	Dedicated for external transceiver Data direction control from PHY	I	AE20	D22
hsusb1_nxt	Dedicated for external transceiver Next signal from PHY	I	AD20	D21
hsusb1_data0	Dedicated for external transceiver Bidirectional data bus	IO	AD18	G20
hsusb1_data1	Dedicated for external transceiver Bidirectional data bus	IO	AC18	F22
hsusb1_data2	Dedicated for external transceiver Bidirectional data bus	IO	AB18	F20

Copyright © 2009–2014, Texas Instruments Incorporated

Table 4-19. Serial Communication Interfaces – USB Signals Description (continued)

SIGNAL NAME [1]	DESCRIPTION [2]	TYPE [3]	ZCN BALL [4]	ZER BALL [4]
hsusb1_data3	Dedicated for external transceiver Bidirectional data bus	IO	AB19	E21
hsusb1_data4	Dedicated for external transceiver Bidirectional data bus additional signals for 12-pin ULPI operation	IO	Y18	E19
hsusb1_data5	Dedicated for external transceiver Bidirectional data bus additional signals for 12-pin ULPI operation	IO	AE19	F21
hsusb1_data6	Dedicated for external transceiver Bidirectional data bus additional signals for 12-pin ULPI operation	IO	AD19	F19
hsusb1_data7	Dedicated for external transceiver Bidirectional data bus additional signals for 12-pin ULPI operation	IO	AA18	G19

4.4.4 Removable Media Interfaces

Table 4-20. Removable Media Interfaces – MMC/SDIO Signals Description

SIGNAL NAME [1]	DESCRIPTION [2]	TYPE [3]	ZCN BALL [4]	ZER BALL [4]
MULTIMEDIA MEMORY CARD (MMC1) / SECURE DIGITAL IO (SDIO1)				
mmc1_clk	MMC/SD Output Clock	O	AA9	P22
mmc1_cmd	MMC/SD command signal	IO	AB9	N21
mmc1_dat0	MMC/SD Card Data bit 0 / SPI Serial Input	IO	AC9	P21
mmc1_dat1	MMC/SD Card Data bit 1	IO	AD9	N20
mmc1_dat2	MMC/SD Card Data bit 2	IO	AE9	P19
mmc1_dat3	MMC/SD Card Data bit 3	IO	AA10	P20
mmc1_dat4	MMC/SD Card Data bit 4	IO	AB10	N22
mmc1_dat5	MMC/SD Card Data bit 5	IO	AC10	N19
mmc1_dat6	MMC/SD Card Data bit 6	IO	AD10	N18
mmc1_dat7	MMC/SD Card Data bit 7	IO	AE10	P18
MULTIMEDIA MEMORY CARD (MMC2) / SECURE DIGITAL IO (SDIO2)				
mmc2_clk	MMC/SD Output Clock	O	AD11	M21
mmc2_dir_dat0	Direction control for DAT0 signal case an external transceiver used	O	AB13	L18
mmc2_dir_dat1	Direction control for DAT1 and DAT3 signals case an external transceiver used	O	AC13	L20
mmc2_dir_dat2	Direction control for DAT2 signal case an external transceiver used	O	AB1	V18
mmc2_dir_dat3	Direction control for DAT4, DAT5, DAT6, and DAT7 signals case an external transceiver used	O	AB2	Y19
mmc2_clkin	MMC/SD input clock	I	AE13	NA
mmc2_dat0	MMC/SD Card Data bit 0	IO	AB12	K20
mmc2_dat1	MMC/SD Card Data bit 1	IO	AC12	L19
mmc2_dat2	MMC/SD Card Data bit 2	IO	AD12	M18

Copyright © 2009–2014, Texas Instruments Incorporated

Table 4-20. Removable Media Interfaces – MMC/SDIO Signals Description (continued)

SIGNAL NAME [1]	DESCRIPTION [2]	TYPE [3]	ZCN BALL [4]	ZER BALL [4]
mmc2_dat3	MMC/SD Card Data bit 3	IO	AE12	K21
mmc2_dat4	MMC/SD Card Data bit 4	IO	AB13	L18
mmc2_dat5	MMC/SD Card Data bit 5	IO	AC13	L20
mmc2_dat6	MMC/SD Card Data bit 6	IO	AD13	L21
mmc2_dat7	MMC/SD Card Data bit 7	IO	AE13	M19
mmc2_dir_cmd	Direction control for CMD signal case an external transceiver is used	O	AD13	NA
mmc2_cmd	MMC/SD command signal	IO	AE11	M20
MULTIMEDIA MEMORY CARD (MMC3) / SECURE DIGITAL IO (SDIO3)				
mmc3_clk	MMC/SD Output Clock	O	AE15,AD17	J19,G22
mmc3_cmd	MMC/SD command signal	IO	AD14,AE18	J20,G21
mmc3_dat0	MMC/SD Card Data bit 0 / SPI Serial Input	IO	AB13,Y18	E19,L18
mmc3_dat1	MMC/SD Card Data bit 1	IO	AC13,AE19	L20,F21
mmc3_dat2	MMC/SD Card Data bit 2	IO	AD13,AD19	L21,F19
mmc3_dat3	MMC/SD Card Data bit 3	IO	AE13,AA18	M19,G19
mmc3_dat4	MMC/SD Card Data bit 4	IO	AD18	G20
mmc3_dat5	MMC/SD Card Data bit 5	IO	AD20	D21
mmc3_dat6	MMC/SD Card Data bit 6	IO	AE20	D22
mmc3_dat7	MMC/SD Card Data bit 7	IO	AB19	E21

Copyright © 2009–2014, Texas Instruments Incorporated

4.4.5 Test Interfaces

Table 4-21. Test Interfaces – ETK Signals Description

SIGNAL NAME [1]	DESCRIPTION [2]	TYPE [3]	ZCN BALL [4]	ZER BALL [4]
etk_ctl	ETK trace ctl	O	AE18	G21
etk_clk	ETK trace clock	O	AD17	G22
etk_d0	ETK data 0	O	AD18	G20
etk_d1	ETK data 1	O	AC18	F22
etk_d2	ETK data 2	O	AB18	F20
etk_d3	ETK data 3	O	AA18	G19
etk_d4	ETK data 4	O	Y18	E19
etk_d5	ETK data 5	O	AE19	F21
etk_d6	ETK data 6	O	AD19	F19
etk_d7	ETK data 7	O	AB19	E21
etk_d8	ETK data 8	O	AE20	D22
etk_d9	ETK data 9	O	AD20	D21
etk_d10	ETK data 10	O	AC20	E22
etk_d11	ETK data 11	O	AB20	E20
etk_d12	ETK data 12	O	AE21	E18
etk_d13	ETK data 13	O	AD21	D20
etk_d14	ETK data 14	O	AC21	D19
etk_d15	ETK data 15	O	AE22	D18

Table 4-22. Test Interfaces – JTAG Signals Description

SIGNAL NAME [1]	DESCRIPTION [2]	TYPE [3]	ZCN BALL [4]	ZER BALL [4]
jtag_ntrst	Test Reset	I	U24	D13
jtag_tck	Test Clock	I	U25	E14
jtag_rtck	ARM Clock Emulation	O	T21	C12
jtag_tms_tmsc	Test Mode Select	IO	T22	A12
jtag_tdi	Test Data Input	I	T23	B12
jtag_tdo	Test Data Output	O	T24	D12
jtag_emu0	Test emulation 0	IO	T25	E13
jtag_emu1	Test emulation 1	IO	R24	E12

Table 4-23. Test Interfaces – HWDBG Signals Description

SIGNAL NAME [1]	DESCRIPTION [2]	TYPE [3]	ZCN BALL [4]	ZER BALL [4]
hw_dbg0	Debug signal 0	O	AD2,AD17	G22
hw_dbg1	Debug signal 1	O	AD1,AE18	G21
hw_dbg2	Debug signal 2	O	AD3,AD18	G20
hw_dbg3	Debug signal 3	O	AE3,AC18	F22
hw_dbg4	Debug signal 4	O	AC5,AB18	F20
hw_dbg5	Debug signal 5	O	AD5,AA18	G19
hw_dbg6	Debug signal 6	O	Y18,AE5	E19
hw_dbg7	Debug signal 7	O	Y6,AE19	F21
hw_dbg8	Debug signal 8	O	Y7,AD19	F19
hw_dbg9	Debug signal 9	O	AA7,AB19	E21
hw_dbg10	Debug signal 10	O	AC7,AE20	D22
hw_dbg11	Debug signal 11	O	AD7,AD20	D21
hw_dbg12	Debug signal 12	O	AE23,AC20	E22

Copyright © 2009–2014, Texas Instruments Incorporated

Table 4-23. Test Interfaces – HWDBG Signals Description (continued)

SIGNAL NAME [1]	DESCRIPTION [2]	TYPE [3]	ZCN BALL [4]	ZER BALL [4]
hw_dbg13	Debug signal 13	O	AD22,AB20	E20
hw_dbg14	Debug signal 14	O	AB25,AE21	E18
hw_dbg15	Debug signal 15	O	AA23,AD21	D20
hw_dbg16	Debug signal 16	O	AA24,AC21	D19
hw_dbg17	Debug signal 17	O	AA25,AE22	D18

4.4.6 Miscellaneous

Table 4-24. Miscellaneous – GP Timer Signals Description

SIGNAL NAME [1]	DESCRIPTION [2]	TYPE [3]	ZCN BALL [4]	ZER BALL [4]
gpt8_pwm_evt	PWM or event for GP timer 8	IO	N4,E23,AE17	V11,C6,H19
gpt9_pwm_evt	PWM or event for GP timer 9	IO	M4,M2,F20,AC16	Y12,AA11,A5,H20
gpt10_pwm_evt	PWM or event for GP timer 10	IO	M3,M1,F19,AB16	V12,W12,B5,H22
gpt11_pwm_evt	PWM or event for GP timer 11	IO	N5,E24,AA16	AA12,D6,H21

Copyright © 2009–2014, Texas Instruments Incorporated

4.4.7 General-Purpose IOs

Table 4-25. General-Purpose IOs Signals Description

SIGNAL NAME [1]	DESCRIPTION [2]	TYPE [3]	ZCN BALL [4]	ZER BALL [4]
gpio_0	General-purpose IO 0	IO	Y1	AB18
gpio_1	General-purpose IO 1	IO	M24	B8
gpio_2	General-purpose IO 2	IO	Y4	AB19
gpio_3	General-purpose IO 3	IO	AA1	AB20
gpio_4	General-purpose IO 4	IO	AA2	W18
gpio_5	General-purpose IO 5	IO	AA3	AA19
gpio_6	General-purpose IO 6	IO	AB1	V18
gpio_7	General-purpose IO 7	IO	AB2	Y19
gpio_8	General-purpose IO 8	IO	AC1	W19
gpio_10	General-purpose IO 10	IO	N25	E9
gpio_11	General-purpose IO 11	IO	T25	E13
gpio_12	General-purpose IO 12	IO	AD17	G22
gpio_13	General-purpose IO 13	IO	AE18	G21
gpio_14	General-purpose IO 14	IO	AD18	G20
gpio_15	General-purpose IO 15	IO	AC18	F22
gpio_16	General-purpose IO 16	IO	AB18	F20
gpio_17	General-purpose IO 17	IO	AA18	G19
gpio_18	General-purpose IO 18	IO	Y18	E19
gpio_19	General-purpose IO 19	IO	AE19	F21
gpio_20	General-purpose IO 20	IO	AD19	F19
gpio_21	General-purpose IO 21	IO	AB19	E21
gpio_22	General-purpose IO 22	IO	AE20	D22
gpio_23	General-purpose IO 23	IO	AD20	D21
gpio_24	General-purpose IO 24	IO	AC20	E22
gpio_25	General-purpose IO 25	IO	AB20	E20
gpio_26	General-purpose IO 26	IO	AE21	E18
gpio_27	General-purpose IO 27	IO	AD21	D20
gpio_28	General-purpose IO 28	IO	AC21	D19
gpio_29	General-purpose IO 29	IO	AE22	D18
gpio_30	General-purpose IO 30	IO	Y3	Y18
gpio_31	General-purpose IO 31	IO	R24	E12
gpio_34	General-purpose IO 34	IO	E3	W5
gpio_35	General-purpose IO 35	IO	E2	Y5
gpio_36	General-purpose IO 36	IO	E1	AB4
gpio_37	General-purpose IO 37	IO	F7	AA5
gpio_38	General-purpose IO 38	IO	F6	AB5
gpio_39	General-purpose IO 39	IO	F4	AB6
gpio_40	General-purpose IO 40	IO	F3	AA6
gpio_41	General-purpose IO 41	IO	F2	W6
gpio_42	General-purpose IO 42	IO	F1	AB7
gpio_43	General-purpose IO 43	IO	G6	Y6
gpio_44	General-purpose IO 44	IO	J4	W10
gpio_45	General-purpose IO 45	IO	J3	AB9
gpio_46	General-purpose IO 46	IO	J2	AB10
gpio_47	General-purpose IO 47	IO	J1	W9

Copyright © 2009–2014, Texas Instruments Incorporated

Table 4-25. General-Purpose IOs Signals Description (continued)

SIGNAL NAME [1]	DESCRIPTION [2]	TYPE [3]	ZCN BALL [4]	ZER BALL [4]
gpio_48	General-purpose IO 48	IO	K4	AA10
gpio_49	General-purpose IO 49	IO	K3	Y9
gpio_50	General-purpose IO 50	IO	K2	V10
gpio_51	General-purpose IO 51	IO	K1	V9
gpio_52	General-purpose IO 52	IO	L1	Y11
gpio_53	General-purpose IO 53	IO	M4	Y12
gpio_54	General-purpose IO 54	IO	M3	V12
gpio_55	General-purpose IO 55	IO	M2	AA11
gpio_56	General-purpose IO 56	IO	M1	W12
gpio_57	General-purpose IO 57	IO	N5	AA12
gpio_58	General-purpose IO 58	IO	N4	V11
gpio_59	General-purpose IO 59	IO	N1	AB13
gpio_60	General-purpose IO 60	IO	R4	W11
gpio_61	General-purpose IO 61	IO	T1	Y15
gpio_62	General-purpose IO 62	IO	T2	W14
gpio_63	General-purpose IO 63	IO	T4	AA16
gpio_64	General-purpose IO 64	IO	T5	Y14
gpio_65	General-purpose IO 65	IO	U1	V14
gpio_66	General-purpose IO 66	IO	AE23	B22
gpio_67	General-purpose IO 67	IO	AD22	B21
gpio_68	General-purpose IO 68	IO	AD23	B20
gpio_69	General-purpose IO 69	IO	AE24	B19
gpio_70	General-purpose IO 70	IO	AD24	A20
gpio_71	General-purpose IO 71	IO	AD25	A19
gpio_72	General-purpose IO 72	IO	AC23	A18
gpio_73	General-purpose IO 73	IO	AC24	B18
gpio_74	General-purpose IO 74	IO	AC25	A17
gpio_75	General-purpose IO 75	IO	AB24	C18
gpio_76	General-purpose IO 76	IO	AB25	D17
gpio_77	General-purpose IO 77	IO	AA23	B16
gpio_78	General-purpose IO 78	IO	AA24	B17
gpio_79	General-purpose IO 79	IO	AA25	C17
gpio_80	General-purpose IO 80	IO	Y22	C16
gpio_81	General-purpose IO 81	IO	Y23	D16
gpio_82	General-purpose IO 82	IO	Y24	D14
gpio_83	General-purpose IO 83	IO	Y25	A16
gpio_84	General-purpose IO 84	IO	W21	D15
gpio_85	General-purpose IO 85	IO	W22	B15
gpio_86	General-purpose IO 86	IO	W23	A15
gpio_87	General-purpose IO 87	IO	W24	A14
gpio_88	General-purpose IO 88	IO	W25	C13
gpio_89	General-purpose IO 89	IO	V24	C15
gpio_90	General-purpose IO 90	IO	V25	A13
gpio_91	General-purpose IO 91	IO	U21	B13
gpio_92	General-purpose IO 92	IO	U22	C14
gpio_93	General-purpose IO 93	IO	U23	B14
gpio_94	General-purpose IO 94	IO	AD2	AB21

Copyright © 2009–2014, Texas Instruments Incorporated

Table 4-25. General-Purpose IOs Signals Description (continued)

SIGNAL NAME [1]	DESCRIPTION [2]	TYPE [3]	ZCN BALL [4]	ZER BALL [4]
gpio_95	General-purpose IO 95	IO	AD1	AA21
gpio_96	General-purpose IO 96	IO	AE2	Y21
gpio_97	General-purpose IO 97	IO	AD3	Y22
gpio_98	General-purpose IO 98	IO	AE3	W21
gpio_99	General-purpose IO 99	I	AD4	W22
gpio_100	General-purpose IO 100	I	AE4	W20
gpio_101	General-purpose IO 101	IO	AC5	V21
gpio_102	General-purpose IO 102	IO	AD5	V19
gpio_103	General-purpose IO 103	IO	AE5	V22
gpio_104	General-purpose IO 104	IO	Y6	U20
gpio_105	General-purpose IO 105	IO	AB6	V20
gpio_106	General-purpose IO 106	IO	AC6	U19
gpio_107	General-purpose IO 107	IO	AE6	U21
gpio_108	General-purpose IO 108	IO	AD6	U22
gpio_109	General-purpose IO 109	IO	Y7	T19
gpio_110	General-purpose IO 110	IO	AA7	T20
gpio_111	General-purpose IO 111	IO	AB7	T21
gpio_112	General-purpose IO 112	I	AE7	R20
gpio_113	General-purpose IO 113	I	AD8	R19
gpio_114	General-purpose IO 114	I	AE8	R21
gpio_116	General-purpose IO 116	IO	D25	E5
gpio_117	General-purpose IO 117	IO	C25	D5
gpio_118	General-purpose IO 118	IO	B25	C5
gpio_119	General-purpose IO 119	IO	D24	E4
gpio_120	General-purpose IO 120	IO	AA9	P22
gpio_121	General-purpose IO 121	IO	AB9	N21
gpio_122	General-purpose IO 122	IO	AC9	P21
gpio_123	General-purpose IO 123	IO	AD9	N20
gpio_124	General-purpose IO 124	IO	AE9	P19
gpio_125	General-purpose IO 125	IO	E25, AA10	A7, P20
gpio_126	General-purpose IO 126	IO	AB10, AD7	N22, T22
gpio_127	General-purpose IO 127	IO	AC10	N19
gpio_128	General-purpose IO 128	IO	AD10	N18
gpio_129	General-purpose IO 129	IO	AE10	P18
gpio_130	General-purpose IO 130	IO	V2, AD11	M21, AB15
gpio_131	General-purpose IO 131	IO	V3, AE11	M20, AB16
gpio_132	General-purpose IO 132	IO	AB12	K20
gpio_133	General-purpose IO 133	IO	AC12	L19
gpio_134	General-purpose IO 134	IO	AD12	M18
gpio_135	General-purpose IO 135	IO	AE12	K21
gpio_136	General-purpose IO 136	IO	AB13	L18
gpio_137	General-purpose IO 137	IO	AC13	L20
gpio_138	General-purpose IO 138	IO	AD13	L21
gpio_139	General-purpose IO 139	IO	AE13	M19
gpio_140	General-purpose IO 140	IO	B24	C4
gpio_141	General-purpose IO 141	IO	C24	B4
gpio_142	General-purpose IO 142	IO	A24	D4

Copyright © 2009–2014, Texas Instruments Incorporated

Table 4-25. General-Purpose IOs Signals Description (continued)

SIGNAL NAME [1]	DESCRIPTION [2]	TYPE [3]	ZCN BALL [4]	ZER BALL [4]
gpio_143	General-purpose IO 143	IO	C23	A4
gpio_144	General-purpose IO 144	IO	F20	A5
gpio_145	General-purpose IO 145	IO	F19	B5
gpio_146	General-purpose IO 146	IO	E24	D6
gpio_147	General-purpose IO 147	IO	E23	C6
gpio_148	General-purpose IO 148	IO	AA19	C22
gpio_149	General-purpose IO 149	IO	Y19	C21
gpio_150	General-purpose IO 150	IO	Y20	C19
gpio_151	General-purpose IO 151	IO	W20	C20
gpio_152	General-purpose IO 152	IO	B23	A3
gpio_153	General-purpose IO 153	IO	A23	B3
gpio_154	General-purpose IO 154	IO	B22	A2
gpio_155	General-purpose IO 155	IO	A22	B2
gpio_156	General-purpose IO 156	IO	R25	B11
gpio_157	General-purpose IO 157	IO	P21	D11
gpio_158	General-purpose IO 158	IO	P22	C10
gpio_159	General-purpose IO 159	IO	P23	C9
gpio_160	General-purpose IO 160	IO	P25	E11
gpio_161	General-purpose IO 161	IO	P24	C11
gpio_162	General-purpose IO 162	IO	N24	C8
gpio_163	General-purpose IO 163	IO	N2	W15
gpio_164	General-purpose IO 164	IO	N3	W13
gpio_165	General-purpose IO 165	IO	P1	AA13
gpio_166	General-purpose IO 166	IO	P2	Y13
gpio_167	General-purpose IO 167	IO	AC7	R22
gpio_168	General-purpose IO 168	IO	W1	Y17
gpio_170	General-purpose IO 170	IO	L25	B9
gpio_171	General-purpose IO 171	IO	AE14	K22
gpio_172	General-purpose IO 172	IO	AD15	K19
gpio_173	General-purpose IO 173	IO	AC15	J18
gpio_174	General-purpose IO 174	IO	AB15	K18
gpio_175	General-purpose IO 175	IO	AD14	J20
gpio_176	General-purpose IO 176	IO	AE15	J19
gpio_177	General-purpose IO 177	IO	AE16	J21
gpio_178	General-purpose IO 178	IO	AD16	J22
gpio_179	General-purpose IO 179	IO	AC16	H20
gpio_180	General-purpose IO 180	IO	AB16	H22
gpio_181	General-purpose IO 181	IO	AA16	H21
gpio_182	General-purpose IO 182	IO	AE17	H19
gpio_183	General-purpose IO 183	IO	W2	Y16
gpio_184	General-purpose IO 184	IO	W4	W16
gpio_185	General-purpose IO 185	IO	W5	W17
gpio_186	General-purpose IO 186	IO	M25	E10

Copyright © 2009–2014, Texas Instruments Incorporated

4.4.8 System and Miscellaneous Terminals

Table 4-26. System and Miscellaneous Signals Description

SIGNAL NAME [1]	DESCRIPTION [2]	TYPE [3]	ZCN BALL [4]	ZER BALL [4]
sys_32k	32-kHz clock input	I	K24	A8
sys_xtalin	Main input clock. Oscillator input	I	K25	A10
sys_xtalout	Output of oscillator	O	H25	A9
sys_altclk	Alternate clock source selectable for GPTIMERs (maximum 54 MHz), USB (48 MHz) , or NTSC/PAL (54 MHz)	I	L25	B9
sys_clkreq	Request from device for system clock (open source type)	IO	M24	B8
sys_clkout1	Configurable output clock1	O	N25	E9
sys_clkout2	Configurable output clock2	O	M25	E10
sys_boot0	Boot configuration mode bit 0	I	Y4	AB19
sys_boot1	Boot configuration mode bit 1	I	AA1	AB20
sys_boot2	Boot configuration mode bit 2	I	AA2	W18
sys_boot3	Boot configuration mode bit 3	I	AA3	AA19
sys_boot4	Boot configuration mode bit 4	I	AB1	V18
sys_boot5	Boot configuration mode bit 5	I	AB2	Y19
sys_boot6	Boot configuration mode bit 6	I	AC1	W19
sys_boot7	Boot configuration mode bit 7	I	AC2	AA20
sys_boot8	Boot configuration mode bit 8	I	AC3	Y20
sys_nrespwron	Power On Reset	I	Y2	AA18
sys_nreswarm	Warm Boot Reset (open drain output)	IOD	Y3	Y18
sys_nirq	External FIQ input	I	Y1	AB18
sys_ndmareq0	External DMA request 0 (system expansion). Level (active low) or edge (falling) selectable.	I	M3	V12
sys_ndmareq1	External DMA request 1 (system expansion). Level (active low) or edge (falling) selectable.	I	M2,U1	AA11,V14
sys_ndmareq2	External DMA request 2 (system expansion). Level (active low) or edge (falling) selectable.	I	F1,M1	W12,AB7
sys_ndmareq3	External DMA request 3 (system expansion). Level (active low) or edge (falling) selectable.	I	G6,N5	AA12,V6

Copyright © 2009–2014, Texas Instruments Incorporated

4.4.9 Power Supplies

Table 4-27. Power Supplies Description

SIGNAL NAME[1]	DESCRIPTION[2]	BALL (ZCN Pkg.) [4]	BALL (ZER Pkg.) [4]
VDD_CORE	1.2-V core and oscillator macros power supply.	V16, V15, V11, V10, U16, U15, U11, U10, T18, T17, T9, T8, R18, R17, R9, R8, M18, L18, L9, L8, K18, K17, K9, K8, J16, J15, J11, J10, H15, H11, H10	J8,J10, J12, J14, J16, K9, K11, K13, K15, L8, L10, L12, L14, M7, M9, M11, M13, M15, N8, N10, N12, N14, P7, P9, P11, P13, P15, R8, R10, R12, R14
VSS	Core and I/O common ground.	AE25, AE1, V18, V17, V14, V13, V12, V9, V8, U18, U17, U14, U13, U12, U9, U8, T14, T13, T12, R16, R15, R14, R13, R12, R11, R10, P18, P17, P16, P15, P14, P13, P12, P11, P10, P9, P8, N18, N17, N14, N13, N12, N9, N8, M17, M16, M15, M14, M13,M12, M11, M10, M9, M8, L17, L16, L15, L14, L13, L12, L11, L10, K14, K13, K12, J18, J17, J14, J13, J12, J9, J8, H14, H13, H12, H9, A25, A1, N23, G20, G21	A1, A11,A22, E6, E16, F6, F13, F15, F17, G5, G7, G11, G14, G16, G18, H6, H7, H8, H9, H10, H11, H12, H13, H14, H15, H16, H17, J9, J11, J13, J15, K8, K10, K12, K14, K16, L7, L9, L11, L13, L15, M1, M6, M8, M10, M12, M14, M16, M22, N7, N9, N11, N13, N15, N17, P6, P8, P10, P12, P14, P16, R5, R7, R9, R11, R13, R15, R17, T6, T8, T10, T12, T14, T16, T18, U5, U7, U9, U11, U13, U15, U17, V6, AB1, AB12, AB22
VDDS_SRAM_MPU	1.8-V MPU SLDO analog power supply.	AA13	L17
VDDS_SRAM_CORE_BG	1.8-V Core SLDO and VDDA of BandGap analog power supply.	E17	J6
CAP_VDD_SRAM_MPU	1.2-V SRAMOUT for MPU SLDO. For proper device operation, connect to a 1µF decoupling capacitor.	AA12	M17
CAP_VDD_SRAM_CORE	1.2-V SRAMOUT for Core SLDO. For proper device operation, connect to a 1µF decoupling capacitor.	E16	K6
VDDS_DPLL_MPU_USBHOST	1.8-V MPUSS DPLL and USBHOST DPLL analog power supply.	AA15	K17
VDDS_DPLL_PER_CORE	1.8-V DPLL and HSDIVIDER/ CORE and HSDIVIDER analog power supply.	N20	F11
VDDA_DAC	1.8-V DAC analog power supply.	H21	NA
VSSA_DAC	DAC analog ground.	H22	NA
VDDA3P3V_USBPHY	3.3-V USB transceiver analog power supply.	F23	F7
VDDA1P8V_USBPHY	1.8-V USB transceiver power supply.	G22	D7
CAP_VDDA1P2LDO_USBPHY	Output of the 1.2-V internal LDO. For proper device operation, connect a 0.22uF capacitor between this pin and VSSA.	F22	E7

Copyright © 2009–2014, Texas Instruments Incorporated

Table 4-27. Power Supplies Description (continued)

SIGNAL NAME[1]	DESCRIPTION[2]	BALL (ZCN Pkg.) [4]	BALL (ZER Pkg.) [4]
VDDSHV	1.8/3.3-V power supply.	Y16, Y15, Y13, Y12, Y10, W16, W15, W13, W12,W10, W9, W6, V7, V6, U19, T20, T19, T7, T6, R7, R6, P20, P19, N19, N7, N6, M7, M6, M5, L19, K19, K7, K6, K5, J7, H18, H17	A21, B1,E15, E17, F12, F14, F18, G10, G12, G13, G8, G17, H18, J17, L22, N16, P17, R16, R18, T9, T11, T13, T17, U8, U10, U12, U14, U16, U18, V7, V8, V17, AA22, AB11
VDDS	1.8-V power supply.	Y9, W18, U20, R5, N22, H16, H8, G17, G16, G14, G13, G11, G10, G8, F16, F13, F11, F10, F8	F5, F16, G15, H5, K7, L6, L16, N1, N5, N6, P5, R6, T5, T7, T15, U6, AA1
VDDSOSC	1.8-V oscillator power supply.	L20	G9
VSSOSC	Oscillator ground.	J25	B10

Copyright © 2009–2014, Texas Instruments Incorporated

5 Specifications

5.1 Absolute Maximum Ratings

Table 5-1 specifies the absolute maximum ratings over the operating junction temperature range of commercial and extended temperature devices. Stresses beyond those listed under absolute maximum ratings may cause permanent damage to the device. These are stress ratings only and functional operation of the device at these or any other conditions beyond those indicated under recommended operating conditions is not implied. Exposure to absolute-maximum-rated conditions for extended periods may affect device reliability.

Notes:

- Logic functions and parameter values are not assured out of the range specified in the recommended operating conditions.

Table 5-1. Absolute Maximum Ratings Over Operating Junction Temperature Range

PARAMETER			MIN	MAX	UNIT
VDD_CORE	Supply voltage range for core macros		-0.5	1.6	V
VDDS	Second supply voltage range for 1.8-V I/O macros		-0.5	2.25	V
VDDSHV	Supply voltage range for 1.8/3.3V I/O macros		-0.5	3.8	V
VDDS_SRAM_MPU	Analog Supply voltage range for 1.8-V MPU SLDO		-0.5	2.25	V
VDDS_SRAM_CORE_BG	Analog Supply voltage range for 1.8-V Core SLDO and VDDA of BandGap		-0.5	2.25	V
VDDS_DPLL_MPU_USBHOST	Analog power supply for 1.8-V MPUSS DPLL and USBHOST DPLL		-0.5	2.1	V
VDDS_DPLL_PER_CORE	Analog power supply for 1.8-V DPLL and HSDIVIDER/ CORE and HSDIVIDER		-0.5	2.1	V
VDDA_DAC	Analog Power Supply for 1.8-V DAC		-0.5	2.43	V
VDDA3P3V_USBPHY	Analog power supply for 3.3-V USB transceiver		-0.5	3.6	V
VDDA1P8V_USBPHY	Power Supply for 1.8-V USB transceiver		-0.5	2.0	V
VDDSOSC	Power Supply for 1.8-V oscillator		-0.5	2.1	V
V_{PAD}	Voltage range at PAD	Oscillator input (sys_xtalin)	-0.3	VDDSOSC + 0.3	V
		VDDS 1.8-V I/O macros	-0.3	VDDS + 0.3	
		Dual-voltage LVCMOS inputs, VDDSHV = 1.8 V	-0.3	VDDSHV + 0.3	
		Dual-voltage LVCMOS inputs, VDDSHV = 3.3 V	-0.3	3.8	
		USB VBUS pin (usb0_vbus)		5.5	
		USB 5V Tolerant IOs (usb0_dp, usb0_dm, usb0_id)		5.25	
I_{IOI}	Current-pulse injection on each I/O pin(1)			200	mA
I_{clamp}	Clamp current for an input or output		-20	20	mA

(1) Each device is tested with I/O pin injection of 200 mA with a stress voltage of 1.5 times maximum vdd at room temperature.

Copyright © 2009–2014, Texas Instruments Incorporated

5.2 Handling Ratings

Table 5-2. Handling Ratings

PARAMETER			MIN	MAX	UNIT
V_{ESD}	ESD stress voltage(1)	HBM (human body model)(2)	>1000		V
		CDM (charged device model)(3)	>500		
T_{stg}	Storage temperature range		-65	150	°C

(1) Electrostatic discharge (ESD) to measure device sensitivity/immunity to damage caused by electrostatic discharges into the device.
(2) The level listed above is the passing level per ANSI/ESDA/JEDEC JS-001-2010. JEDEC document JEP155 states that 500V HBM allows safe manufacturing with a standard ESD control process, and manufacturing with less than 500V HBM is possible if necessary precautions are taken. Actual performance of the device may exceed the value listed above.
(3) The level listed above is the passing level per EIA-JEDEC JESD22-C101E. JEDEC document JEP157 states that 250V CDM allows safe manufacturing with a standard ESD control process. Actual performance of the device may exceed the value listed above.

Copyright © 2009–2014, Texas Instruments Incorporated

5.3 Recommended Operating Conditions

All AM3517/05 modules are used under the operating conditions contained in Table 5-3.

Note: Logic functions and parameter values are not assured if the device is operated out of the range specified in the recommended operating conditions.

Table 5-3. Recommended Operating Conditions

PARAMETER	DESCRIPTION		MIN	NOM	MAX	UNIT
VDD_CORE	Core and oscillator macros power supply		1.152	1.20	1.248	V
	Noise (peak-peak)				24.00	mVpp
VDDS_SRAM_MPU	MPU SRAM LDO analog power supply		1.71	1.80	1.89	V
	Noise (peak-peak)				50.00	mVpp
VDDS_SRAM_CORE_BG	Core SRAM LDO and BandGap analog power supply		1.71	1.80	1.89	V
	Noise (peak-peak)				50.00	mVpp
VDDS_DPLL_MPU_USBHOST	MPU and USBHOST DPLL analog power supply		1.71	1.80	1.89	V
	Noise (peak-peak)				35.00	mVpp
VDDS_DPLL_PER_CORE	Peripherals and Core DPLLs analog power supply		1.71	1.80	1.89	V
	Noise (peak-peak)				35.00	mVpp
VDDA_DAC	DAC analog power supply		1.71	1.80	1.89	V
	Noise (peak-peak)				30.00	mVpp
VSSA_DAC	DAC analog ground			0.00		V
VDDA3P3V_USBPHY	Analog power supply for 3.3-V USB transceiver		3.14	3.30	3.47	V
	Noise (peak-peak)				70.00	mVpp
VDDA1P8V_USBPHY	Power Supply for 1.8-V USB transceiver		1.71	1.80	1.89	V
	Noise (peak-peak)				50.00	mVpp
VDDSHV	3.3-/1.8-V power supply	1.8 V Mode	1.71	1.80	1.89	V
		3.3 V Mode	3.14	3.30	3.47	V
VDDS	1.8-V power supply		1.71	1.80	1.89	V
Tj	Operating junction temperature range	Commercial Temperature	0		90	°C
		Extended Temperature	-40		105	°C
Device Operating Life Power-On Hours (POH)(1)	500 MHz ARM Clock Freq.	< 90°C T_J		100K		hrs.
		90 - 105 °C T_J		100K		
	600 MHz ARM Clock Freq.	< 90°C T_J		100K		
		90 - 105 °C T_J		50K(2)		

(1) The POH information is provided solely for your convenience and does not extend or modify the warranty provided under TI's standard terms and conditions for TI semiconductor products.
(2) Maximum lifetime will be 100k Power On Hours as long as no more than 50k is greater than 90°C.

Copyright © 2009–2014, Texas Instruments Incorporated

Figure 5-1 shows the power domains:

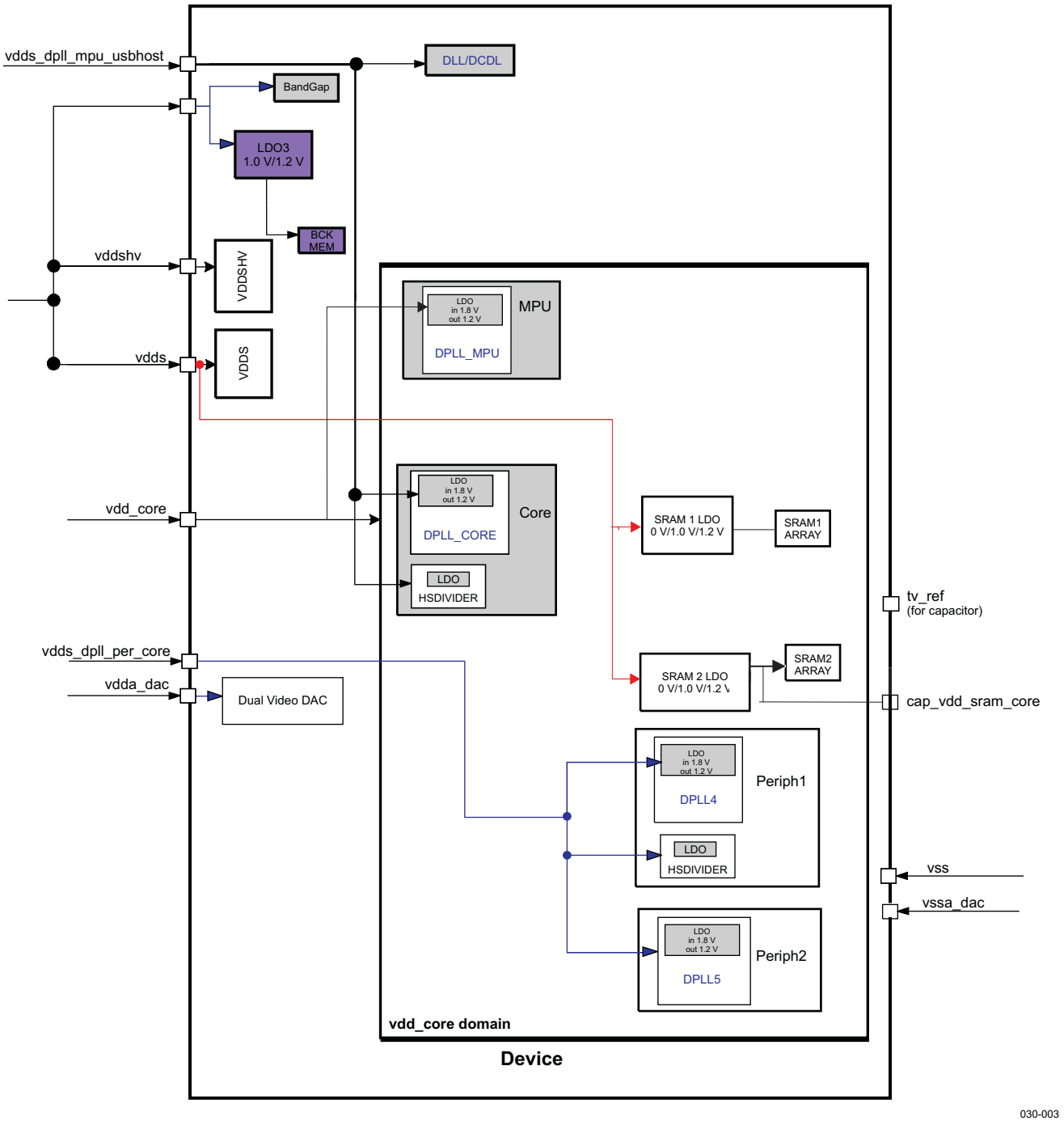

Figure 5-1. AM3517/05 Voltage Domains

5.4 Power Consumption Summary

The supply voltages and power consumption estimates are detailed in Table 5-4.

Table 5-4. Estimated Power Consumption at Ball Level

SIGNAL NAME	DESCRIPTION		MAX CURRENT (mA)
VDD_CORE	1.2-V core and oscillator macros power supply	AM3517	1500 mA
		AM3505	1400 mA
VDDS_SRAM_MPU	1.8-V MPU SLDO analog power supply		40 mA
VDDS_SRAM_CORE_BG	1.8-V Core SLDO and VDDA of BandGap analog power supply		40 mA
VDDS_DPLL_MPU_USBHOST	1.8-V MPUSS DPLL and USBHOST DPLL analog power supply		25 mA
VDDS_DPLL_PER_CORE	1.8-V DPLL and HSDIVIDER/ CORE and HSDIVIDER analog power supply		25 mA
VDDA_DAC	1.8-V DAC analog power supply		65 mA
VDDA3P3V_USBPHY	3.3-V USB transceiver analog power supply		10 mA
VDDA1P8V_USBPHY	1.8-V USB transceiver power supply		50 mA
VDDSHV	3.3-/1.8-V power supply		300 mA
VDDS	1.8-V power supply		200 mA
VDDSOSC	1.8-V oscillator power supply		20 mA

Copyright © 2009–2014, Texas Instruments Incorporated

5.5 Electrical Characteristics

Table 5-5 summarizes the DC electrical characteristics.

Table 5-5. DC Electrical Characteristics

PARAMETER				MIN	NOM	MAX	UNIT
LVCMOS Pin Buffers							
V_{IH}	High-level input voltage	VDDSHV = 1.8 V.		0.65 x VDDSHV.			V
		VDDSHV = 3.3 V(1)		2			
		sys_xtalin		0.8 x VDDSOSC			
V_{IL}	Low-level input voltage	VDDSHV = 1.8 V(1)				0.35 x VDDSHV	V
		VDDSHV = 3.3 V(1)				0.8	
		sys_xtalin				0.2 x VDDSOSC	
V_{OH}	High-level output voltage	VDDSHV = 1.8 V(1) I_{OH} = -2 mA		VDDSHV - 0.45			V
		VDDSHV = 3.3 V(1) I_{OH} = -2 mA		2.4			
V_{OL}	Low-level output voltage	VDDSHV = 1.8 V(1) I_{OL} = 2 mA				0.45	V
		VDDSHV = 3.3 V(1) I_{OL} = 2 mA				0.4	
I_I	Input current for dual voltage IO pins	V_I = V_{ss} to VDDSHV	Input pins with pull disabled	-9		9	µA
		V_I = V_{ss} to VDDSHV	Input pins with 100 µA pull-up enabled	-310		-70	
		V_I = V_{ss} to VDDSHV	Input pins with 100 µA pull-down enabled	75		270	
	Input current for DDR2/mDDR 1.8V IO pins	V_I = V_{ss} to VDDSHV	Input pins with 100 µA pull-down enabled	77		286	
I_{OZ}	Off-state output current	V_O = VDDSHV or 0V	Pull disabled	-20		20	µA
I_{OH}	High-level output current (dual-voltage LVCMOS IOs)					-2	mA
I_{OL}	Low-level output current (dual-voltage LVCMOS IOs)					2	mA
t_T	Input transition time (rise time, tR or fall time, tF evaluated between 10% and 90% at PAD)	VDDSHV = 1.8 V(1)	Normal mode			10	ns
			High-speed mode			3	
		VDDSHV = 3.3 V(1)	Normal mode			10	
			High-speed mode			3	
Capacitance	Input capacitance (dual-voltage LVCMOS I/Os)				3		pF
	Output capacitance (dual-voltage LVCMOS I/Os)				3		pF
Complex IO Dedicated to USB : USB0_DM and USB0_DP							
V_{IH}	High-level input voltage	Low/Full speed		2.0			V
		High speed					
(2)V_{IL}	Low-level input voltage	Low/Full speed				0.8	V
		High speed				(2)	
V_{OH}	High-level output voltage	Low/Full speed		2.8		VDDA3P3V_USBPHY	V
		High speed		360		440	mV

(1) These IO specifications apply to the dual-voltage IOs only and do not apply to the DDR2/mDDR interfaces. DDR2/mDDR IOs are 1.8V IOs and adhere to the JESD79-2A standard.
(2) These parameters must adhere to the requirements defined in section 7.1.7.2 of Universal Serial Bus Specifications revision 2.0.

Copyright © 2009–2014, Texas Instruments Incorporated

Table 5-5. DC Electrical Characteristics (continued)

PARAMETER			MIN	NOM	MAX	UNIT
V_{OL}	Low-level output voltage	Low/Full speed	0.0		0.3	V
		High speed	-10		10	mV

5.6 Thermal Characteristics

Table 5-6 and Table 5-7 provide the thermal resistance characteristics for the recommended package types used on the AM3517/05.

Table 5-6. Package Thermal Resistance Characteristics [ZCN Package]

NAME	DESCRIPTION	AIR FLOW (m/s)(1)	ZCN (°C/W)(2)
Θ_{JC}	Junction-to-case (1S0P)(3)	NA	2.6
Θ_{JB}	Junction-to-board (2S2P)(3)	NA	10.1
Θ_{JA}	Junction-to-free air (2S2P)(3)	0.0	24.1
		1.0	18.7
		2.0	17.5
		3.0	16.8
Ψ_{JT}	Junction-to-package top (2S2P)(3)	0.0	0.05
		1.0	0.2
		2.0	0.2
		3.0	0.3
Ψ_{JB}	Junction-to-board (2S2P)(3)	0.0	10.0
		1.0	10.3
		2.0	10.2
		3.0	10.1

(1) m/s = meters per second.
(2) °C/W = degrees celsius per watt.
(3) The board types are defined by JEDEC (reference JEDEC standard JESD51-9, *Test Board for Area Array Surface Mount Package Thermal Measurements*).

Table 5-7. Package Thermal Resistance Characteristics [ZER](1)

NAME	DESCRIPTION	AIR FLOW (m/s)(2)	ZER (°C/W)(3)
Θ_{JC}	Junction-to-case (2S2P)(4)	NA	6
Θ_{JB}	Junction-to-board (2S2P)(4)	NA	6
Θ_{JA}	Junction-to-free air (2S2P)(4)	0.0	15.8
		1.0	12.0
		2.0	11.1
		3.0	10.8
Ψ_{JT}	Junction-to-package top (2S2P)(4)	0.0	3.3
		1.0	3.7
		2.0	3.5
		3.0	3.5

(1) Package thermal resistance characteristics for ZER support only 2S2P.
(2) m/s = meters per second.
(3) °C/W = degrees celsius per watt.
(4) The board types are defined by JEDEC (reference JEDEC standard JESD51-9, *Test Board for Area Array Surface Mount Package Thermal Measurements*).

Copyright © 2009–2014, Texas Instruments Incorporated

Table 5-7. Package Thermal Resistance Characteristics [ZER][1] (continued)

NAME	DESCRIPTION	AIR FLOW (m/s)[2]	ZER (°C/W)[3]
Ψ_{JB}	Junction-to-board (2S2P)[4]	0.0	6.0
		1.0	6.1
		2.0	5.8
		3.0	5.7

Copyright © 2009–2014, Texas Instruments Incorporated

5.7 Core Voltage Decoupling

For module performance, decoupling capacitors are required to suppress the switching noise generated by high frequency and to stabilize the supply voltage. A decoupling capacitor is most effective when it is close to the device because this minimizes the inductance of the circuit board wiring and interconnects.

Table 5-8 summarizes the power supplies decoupling characteristics.

Table 5-8. Core Voltage Decoupling Characteristics

PARAMETER	MIN	TYP	MAX	UNIT
Cvdd_core(1)	50	100	120	nF
Ccap_vdd_sram_core		100		nF
Cvdds_dpll_mpu_usbhost		100		nF
Cvdds_dpll_per_core		100		nF
Cvdda_dac		100		nF
Cvdd_sram_core		100		nF
Cvdd_sram_core_bg		100		nF
Cvdds_sram_mpu		100		nF
Cvddshv		100		nF
Cvdda3p3v_usbphy		100		nF
Cvdda1p8v_usbphy		100		nF

(1) 1 capacitor per 2 to 4 balls

Copyright © 2009–2014, Texas Instruments Incorporated

Figure 5-2 shows an example of power supply decoupling.

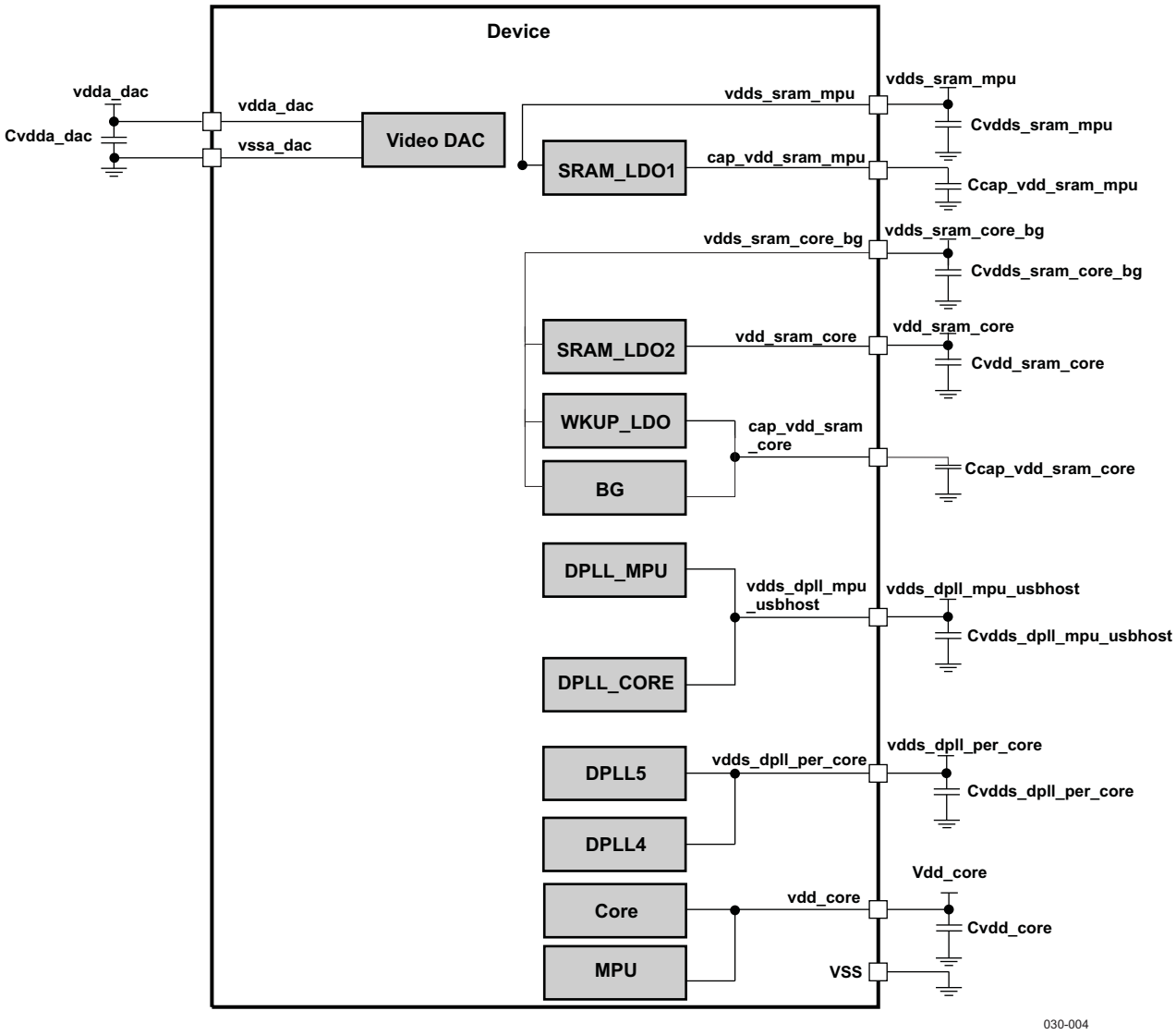

(1) Decoupling capacitors must be placed as closed as possible to the power ball. Choose the ground located closest to the power pin for each decoupling capacitor. Place the decoupling capacitor Ci in a group of 1, 2, or 3 balls; the total must be equal to the decoupling requirement. In case you interconnect powers, first insert the decoupling capacitor and then interconnect the powers.

(2) The decoupling capacitor value depends on the board characteristics.

Figure 5-2. Power Supply Decoupling

Copyright © 2009–2014, Texas Instruments Incorporated

5.8 Power-up and Power-down

This section provides the timing requirements for the AM3517/05 hardware signals.

5.8.1 Power-up Sequence

The following steps give an example of power-up sequence supported by the AM3517/05.

1. IO 1.8V supply (VDDS), Band-gap and LDO supplies (VDDS_SRAM_CORE_BG, VDDS_SRAM_MPU) and oscillator supply (VDDSOSC) should come up first to a stable state.
2. IO 3.3V (VDDSHV) supply should be ramped up next to a stable state.
3. Core (VDD_CORE) supply follows next to a stable state.
4. All the PLL supplies (VDDS_DPLL_PER_CORE, VDDS_DPLL_MPU_USBHOST) and 1.8 V complex IO supplies (VDDA_DAC, VDDA1P8V_USBPHY) should be ramped up next to a stable state.
5. Finally, 3.3 V complex IO (VDDA_3P3V_USBPHY) should be ramped up.
6. sys_nrespwron must be held low at the time the power supplies are ramped up till the time the sys_32k and sys_xtalin clocks are stable.

Note: In VDDSHV 1.8 V operation mode, VDDSHV can be grouped and powered up together with VDDS, VDDS_SRAM_CORE_BG, VDDS_SRAM_MPU and VDDSOSC.

Copyright © 2009–2014, Texas Instruments Incorporated

Figure 5-3 shows the power-up sequence.

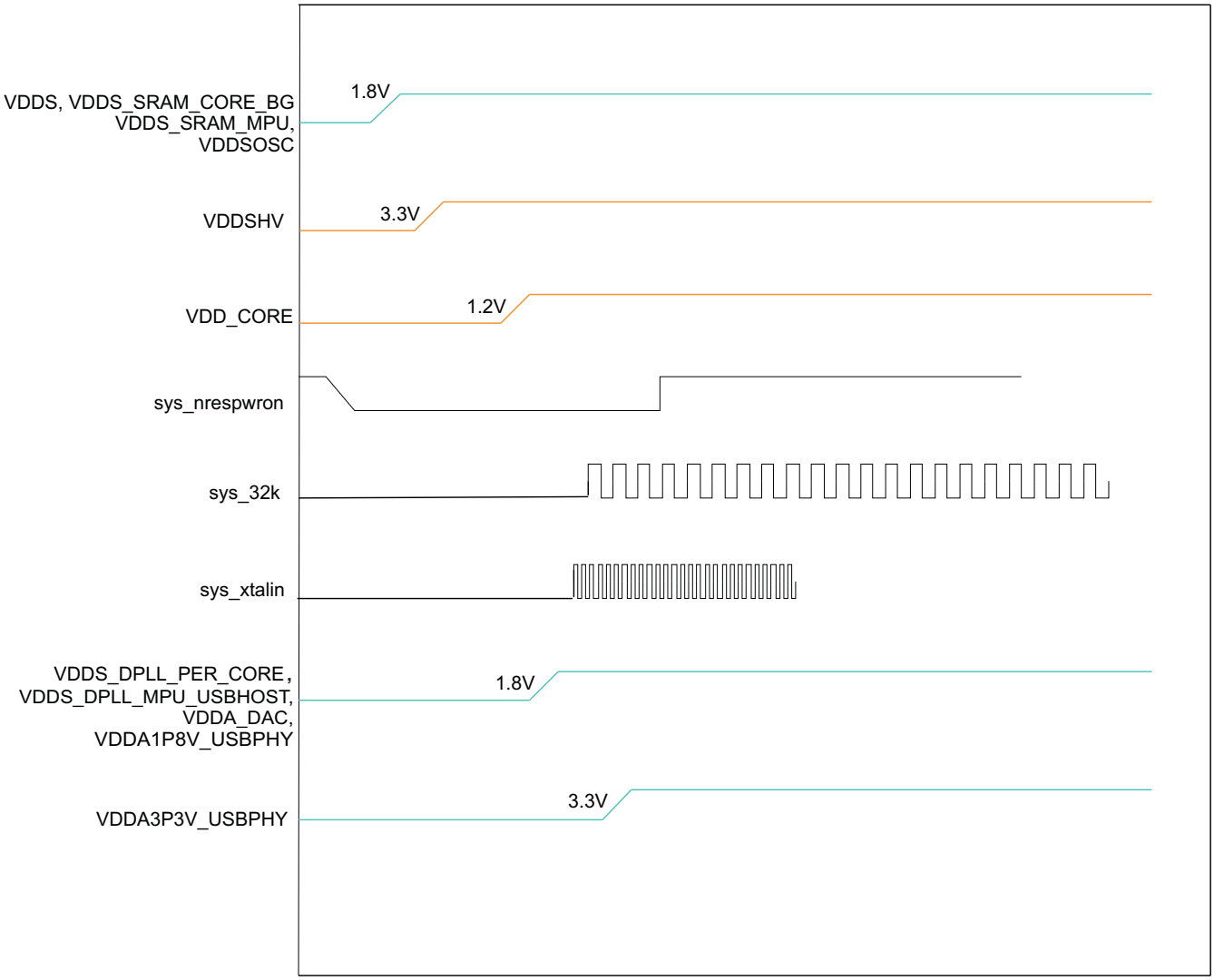

Figure 5-3. Power-up Sequence

5.8.2 Power-down Sequence

The AM3517/05 device proceeds with the power-down sequence shown below.

The following steps give an example of the power-down sequence supported by the AM3517/05 device.

1. Reset AM3517/05 device.
2. Stop all signals driven to AM3517/05.
3. Option 1: Power down all domains simutaneously.
4. Option 2: If all domains cannot be powered down simultaneously, follow the below sequence:
   (a) Power off all complex I/O domains
   (b) Power off core domain (VDD_CORE)
   (c) Power off all PLL domains (VDDS_DPLL_MPU_USBHOST and VDDS_DPLL_PER_CORE)
   (d) Power off all SRAM LDOs
   (e) Power off all standard I/O domains (VDDS and VDDSHV)

5.9 Clock Specifications

The AM3517/05 device has three external input clocks, a low frequency (sys_32k), a high frequency (sys_xtalin), and an optional (sys_altclk). The AM3517/05 device has two configurable output clocks, sys_clkout1 and sys_clkout2.

Figure 5-4 shows the interface to the external clock sources and clock outputs.

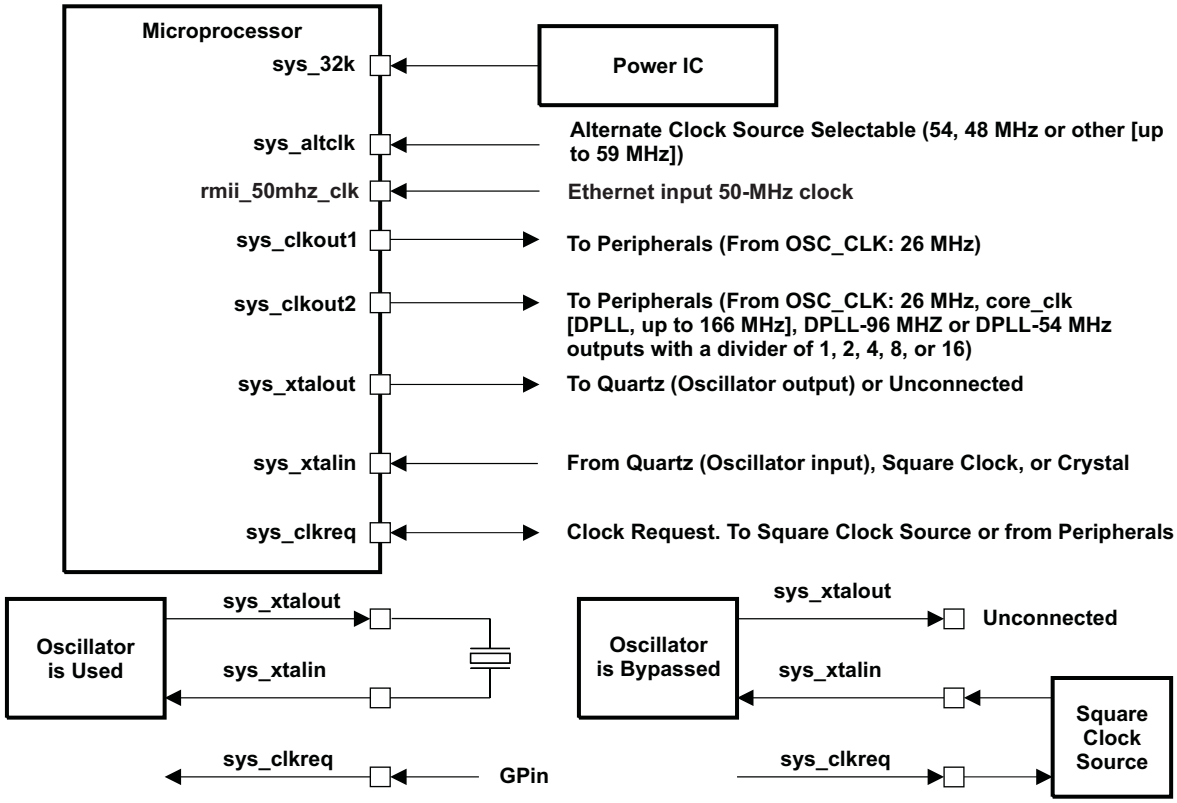

Figure 5-4. Clock Interface

The AM3517/05 device operation requires the following three input clocks:

Copyright © 2009–2014, Texas Instruments Incorporated

- The 32-kHz clock can be generated using one of the following options and can be selected via the sys_boot7 pin. See Figure 5-5.
  - External: Supplied by an oscillator on the sys_32k pin.
  - Internal: 32-kHz clock generation using a fixed divider on the HS system clock (26MHz).
- The system alternative clock can be used (through the sys_altclk pin) to provide alternative 48 or 54 MHz or other clock source (up to 54 MHz).
- The system clock input (26 MHz) is used to generate the main source clock of the AM3517/05 device. It supplies the DPLLs as well as several AM3517/05 modules. The system clock input can be connected to either:
  - A crystal oscillator clock managed by sys_xtalin and sys_xtalout. In this case, the sys_clkreq is used as an input (GPIN).
  - A CMOS digital clock through the sys_xtalin pin. In this case, the sys_clkreq is used as an output to request the external system clock.

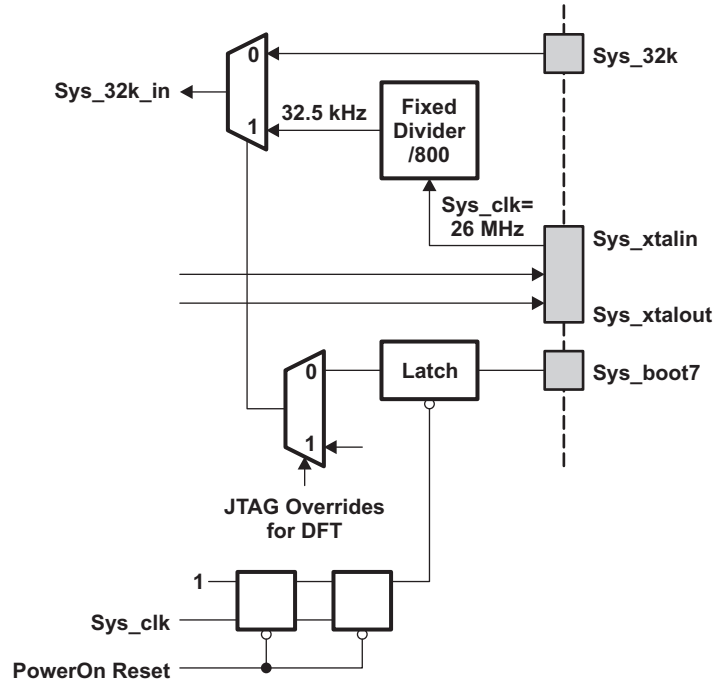

Figure 5-5. 32-kHz Clock Generation

The AM3517/05 outputs externally two clocks:

- sys_clkout1 can output the oscillator clock (26 MHz) at any time.
- sys_clkout2 can output the oscillator clock, core_clk, 96 MHz or 54 MHz. It can be divided by 2, 4, 8, or 16 and its off state polarity is programmable.

5.9.1 Oscillator

The sys_xtalin (26 MHz) oscillator provides the primary reference clock for the device. The on-chip oscillator requires an external crystal connected across the sys_xtalin and sys_xtalout pins, along with two load capacitors, as shown in Figure 4-3. The external crystal load capacitors must be connected only to the oscillator ground pin (VSSOSC). Do not connect to board ground (VSS).

Note: If an external oscillator is to be used, the external oscillator clock signal should be connected to the sys_xtalin pin with a 1.8V amplitude. The sys_xtalout should be left unconnected and the VSSOSC signal should be connected to board ground (VSS).

Copyright © 2009–2014, Texas Instruments Incorporated

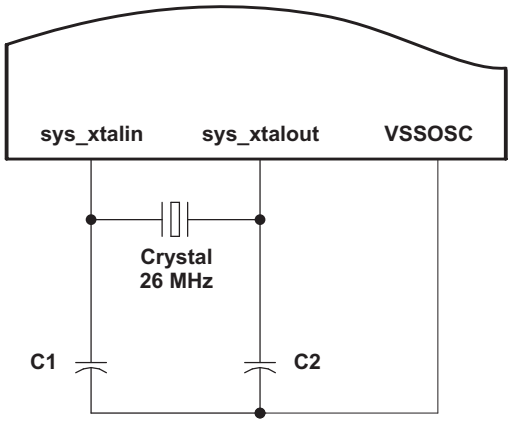

A. Oscillator components (Crystal, C_1, C_2) must be located close to the AM35x package. Parasitic capacitance to the printed circuit board (PCB) ground and other signals should be minimized to reduce noise coupled into the oscillator. The VSSOSC terminal provides a Kelvin ground reference for the external crystal components. External crystal component grounds should only be connected to the VSSOSC terminal and should not be connected to the PCB ground plane.

B. C_1 and C_2 represent the total capacitance of the respective PCB trace, load capacitor, and other components (excluding the crystal) connected to each crystal terminal. The value of capacitors C_1 and C_2 should be selected to provide the total load capacitance, C_L, specified by the crystal manufacturer. The total load capacitance is $C_L = [(C_1*C_2)/(C_1+C_2)] + C_{shunt}$, where C_{shunt} is the crystal shunt capacitance (C_0) specified by the crystal manufacturer plus any mutual capacitance ($C_{pkg} + C_{PCB}$) seen across the AM3517/05 sys_xtalin and sys_xtalout signals. For recommended values of crystal circuit components, see Table 5-9.

Figure 5-6. AM3517/05 Oscillator Connections

Table 5-9. Crystal Electrical Characteristics

PARAMETER	MIN	TYP	MAX	UNIT
Oscillation frequency		26		MHz
Crystal ESR		50		Ω
Frequency stability			+/- 50	ppm
Parallel Load Capacitance (C1 and C2)			20	pF
Shunt Capacitance			5	pF

5.9.2 Input Clock Specifications

The clock system accepts three input clock sources:

- 32-kHz digital CMOS clock
- Crystal oscillator clock or CMOS digital clock (26 MHz)
- Alternate clock (48 or 54 MHz, or other up to 54 MHz)

Table 5-10. 26-MHz SYS_CLK Input Clock Timing Requirements

PARAMETER	DESCRIPTION	MIN	TYP	MAX	UNIT
f(xtalin)	Frequency, sys_xtalin	26			MHz
tw(xtalin)	Duty Cycle, sys_xtalin	45		55	%
tj(xtalin)	Jitter, sys_xtalin	-1		1	%
tt(xtalin)	Transition time, sys_xtalin			5	ns

Copyright © 2009–2014, Texas Instruments Incorporated

Table 5-11 and Table 5-12 detail the electrical characteristics and input requirements of the 32-kHz input clock.

Table 5-11. 32-kHz Input Clock Source Electrical Characteristics

PARAMETER	DESCRIPTION	MIN	TYP	MAX	UNIT
f	Frequency, sys_32k		32.768		kHz
C_i	Input capacitance			0.45	pF
R_i	Input resistance	0.25		10^6	GΩ

Table 5-12. 32-kHz Input Clock Source Timing Requirements(1)

PARAMETER	DESCRIPTION	MIN	TYP	MAX	UNIT
1 / $t_{c(32k)}$	Frequency, sys_32k		32		kHz
$t_{R(32k)}$	Rise transition time, sys_32k			20	ns
$t_{F(32k)}$	Fall transition time, sys_32k			20	ns
$t_{J(32k)}$	Frequency stability, sys_32k			+/-200	ppm

(1) See *Electrical Characteristics* for Standard LVCMOS IOs part for sys_32k V_{IH}/V_{IL} parameters.

Table 5-13 and Table 5-14 detail the electrical characteristics and input requirements of the 48- or 54-MHz input clock.

Table 5-13. 48-MHz, 54-MHz, or up to 59-MHz Input Clock Source Electrical Characteristics

NAME	DESCRIPTION	MIN	MAX	UNIT
f	Frequency , sys_altclk	48, 54, or up to 59		MHz
C_i	Input capacitance		0.74	pF
R_i	Input resistance	0.25	10^6	GΩ

Table 5-14. 48-MHz, 54-MHz, or up to 59-MHz Input Clock Source Timing Requirements(1) (2)

PARAMETER	DESCRIPTION	MIN	MAX	UNIT
1 / $t_{c(sys_altclk)}$	Frequency, sys_altclk	48, 54, or up to 59		MHz
$t_{w(sys_altclk)}$	Duty cycle	45	60	%
$t_{j(sys_altclk)}$	Jitter	-1	1	%
$t_{r(sys_altclk)}$	Rise transition time		10	ns
$t_{f(sys_altclk)}$	Fall transition time		10	ns
$f_{t(sys_altclk)}$	Frequency tolerance	-50	50	ppm

(1) Peak-to-peak jitter is defined as the difference between the maximum and the minimum output periods on a statistical population of 300 period samples. The sinusoidal noise is added on top of the vdds supply voltage.
(2) See Section 5, *Electrical Characteristics*, for sys_altclk V_{IH}/V_{IL} parameters.

Copyright © 2009–2014, Texas Instruments Incorporated

5.9.3 Output Clock Specifications

Two output clocks (pin sys_clkout1 and pin sys_clkout2) are available:

- sys_clkout1 can output the oscillator clock (26 MHz) at any time. It can be controlled by software or externally using sys_clkreq control. When the device is in the off state, the sys_clkreq can be asserted to enable the oscillator and activate the sys_clkout1 without waking up the device. The off state polarity of sys_clkout1 is programmable.
- sys_clkout2 can output sys_clk (26 MHz), core_clk (core DPLL output), APLL-96 MHz, or APLL-54 MHz. It can be divided by 2, 4, 8, or 16 and its off state polarity is programmable. This output is active only when the core domain is active.

Table 5-15 summarizes the sys_clkout1 output clock electrical characteristics.

Table 5-15. SYS_CLKOUT1 Output Clock Electrical Characteristics

NAME	DESCRIPTION		MIN	TYP	MAX	UNIT
f	Frequency			26		MHz
C_I	Load capacitance(1)	f(max) = 38.4 MHz		70		pF
		f(max) = 26 MHz		125		

(1) The load capacitance is adapted to a frequency.

Table 5-16 details the sys_clkout1 output clock timing characteristics.

Table 5-16. SYS_CLKOUT1 Output Clock Switching Characteristics

NAME	DESCRIPTION		MIN	TYP	MAX	UNIT
f	1 / CO0	Frequency		26		MHz
CO1	$t_{w(CLKOUT1)}$	Pulse duration, sys_clkout1 low or high	0.40 * $t_{c(CLKOUT1)}$		0.60 * $t_{c(CLKOUT1)}$	ns
CO2	$t_{R(CLKOUT1)}$	Rise time, sys_clkout1(1)			3.31	ns
CO3	$t_{F(CLKOUT1)}$	Fall time, sys_clkout1(1)			3.31	ns

(1) With a load capacitance of 25 pF.

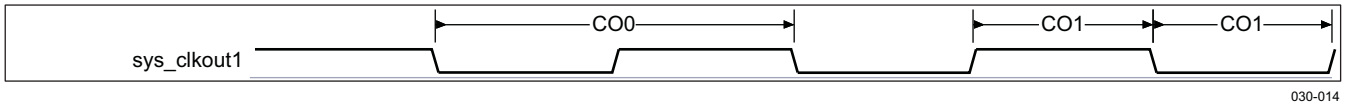

Figure 5-7. SYS_CLKOUT1 System Output Clock

Table 5-17 summarizes the sys_clkout2 output clock electrical characteristics.

Table 5-17. SYS_CLKOUT2 Output Clock Electrical Characteristics

NAME	DESCRIPTION		MIN	TYP	MAX	UNIT
f	Frequency, sys_clkout2(1)				166	MHz
C_L	Load capacitance(2)	f(max) = 166 MHz	2	8	12	pF

(1) The maximum frequency supported is core_clk/2 MHz.
(2) The load capacitance is adapted to a frequency.

Copyright © 2009–2014, Texas Instruments Incorporated

Table 5-18 details the sys_clkout2 output clock timing characteristics.

Table 5-18. SYS_CLKOUT2 Output Clock Switching Characteristics

NAME	DESCRIPTION		MIN	TYP	MAX	UNIT
f	1 / CO0	Frequency			166	MHz
CO1	$t_{w(CLKOUT2)}$	Pulse duration, sys_clkout2 low or high	0.40 * tc(CLKOUT2)		0.60 * tc(CLKOUT2)	ns
CO2	$t_{R(CLKOUT2)}$	Rise time, sys_clkout2 (1)			3.7	ns
CO3	$t_{F(CLKOUT2)}$	Fall time, sys_clkout2 (1)			4.3	ns

(1) With a load capacitance of 25 pF.

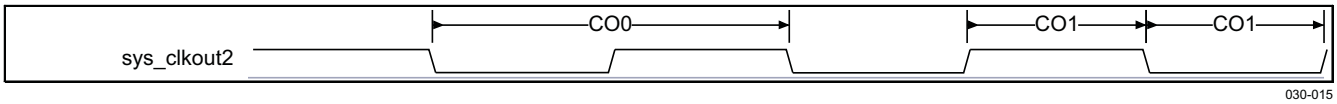

Figure 5-8. SYS_CLKOUT2 System Output Clock

5.9.4 DPLL Specifications

The AM3517/05 integrates four DPLLs. The PRM and CM drive them.

The four main DPLLs are:

- DPLL1 (MPU)
- DPLL3 (Core)
- DPLL4 (Peripherals)
- DPLL5 (Second Peripherals DPLL)

Figure 5-9 shows the DPLL implementation.

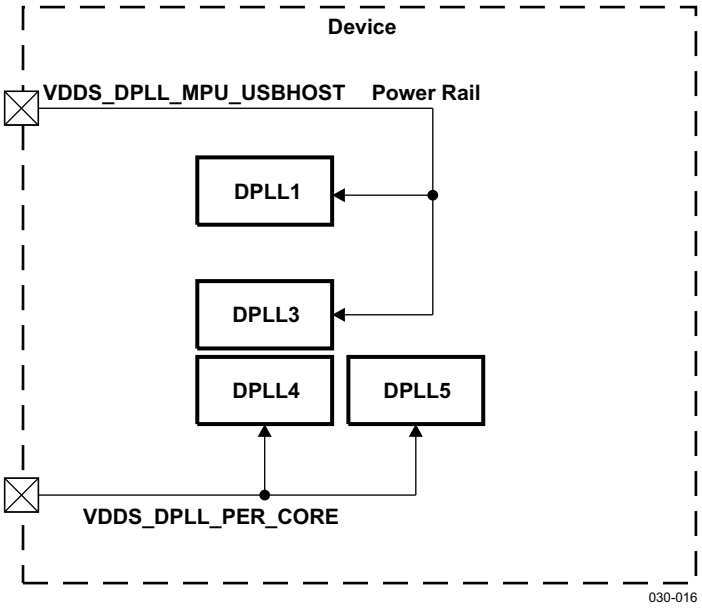

Figure 5-9. DPLL Implementation

5.9.4.1 Digital Phase-Locked Loop (DPLL)

The DPLL provides all interface clocks and some functional clocks (such as the processor clocks) of the AM3517/05 device.

DPLL1 gets an always-on clock used to produce the synthesized clock. They get a high-speed bypass clock used to switch the DPLL output clock on this high-speed clock during bypass mode.

The high-speed bypass clock is an L3 divided clock (programmable by 1 or 2) that saves DPLL processor power consumption when the processor does not need to run faster than the L3 clock speed, or optimizes performance during frequency scaling.

Each DPLL synthesized frequency is set by programming M (multiplier) and N (divider) factors. In addition, all DPLL outputs can be controlled by an independent divider (M2 to M6).

The clock generating DPLLs of the AM3517/05 device have following features:

- Independent power domain per DPLL
- Controlled by clock-manager (CM)
- Fed with always-on system clock with independent gating control per DPLL
- Analog part supplied through dedicated power supply (1.8 V) and an embedded LDO to get rid of 1-MHz noise
- Up to four independent output dividers for simultaneous generation of multiple clock frequencies

Copyright © 2009–2014, Texas Instruments Incorporated

5.9.4.1.1 DPLL1 (MPU)

DPLL1 is located in the MPU subsystem and supplies all clocks of the subsystem. All MPU subsystem clocks are internally generated in the subsystem. When the core domain is on, it can use the DPLL3 (CORE DPLL) output as a high-frequency bypass input clock.

5.9.4.1.2 DPLL3 (CORE)

DPLL3 supplies all interface clocks and also a few module functional clocks. It can be also source of the emulation trace clock. It is located in the core domain area. All interface clocks and a few module functional clocks are generated in the CM. When the core domain is on, it can be used as a bypass input to DPLL1.

5.9.4.1.3 DPLL4 (Peripherals)

DPLL4 generates clocks for the peripherals. It supplies five clock sources: 96-MHz functional clocks to subsystems and peripherals, 54 MHz to TV DAC, display functional clock, camera sensor clock, and emulation trace clock. It is located in the core domain area. All interface clocks and few module functional clocks are generated in the CM. Its outputs to the DSS, PER, and EMU domains are propagated with always-on clock trees.

5.9.4.1.4 DPLL5 (Second peripherals DPLL)

DPLL5 supplies the 120-MHz functional clock to the CM.

Copyright © 2009–2014, Texas Instruments Incorporated

5.9.4.2 DPLL Noise Isolation

The DPLL requires dedicated power supply pins to isolate the core analog circuit from the switching noise generated by the core logic that can cause jitter on the clock output signal. Guard rings are added to the cell to isolate it from substrate noise injection.

The vdd supplies are the most sensitive to noise; decoupling capacitance is recommended below the supply rails. The maximum input noise level allowed is 30 mV_{PP} for frequencies below 1 MHz.

Figure 5-10 shows an example of a noise filter.

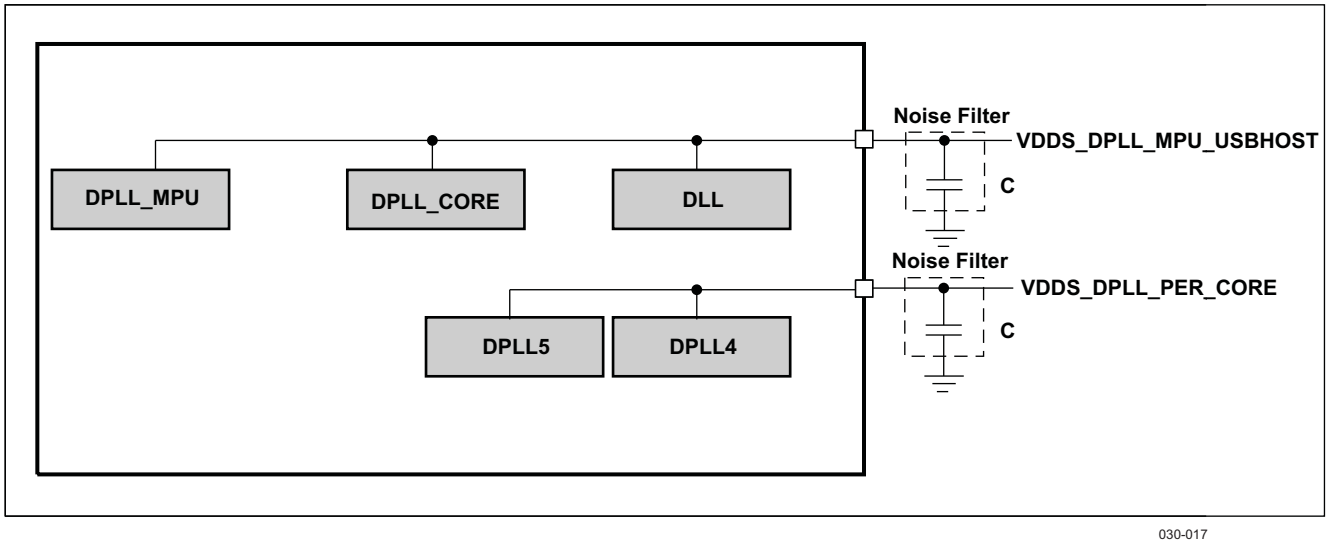

Figure 5-10. DPLL Noise Filter

Table 5-19 specifies the noise filter requirements.

Table 5-19. DPLL Noise Filter Requirements

NAME	MIN	TYP	MAX	UNIT
Filtering capacitor		100		nF

(1) The capacitors must be inserted between power and ground as close as possible.

(2) This circuit is provided only as an example.

(3) The filter must be located as close as possible to the device.

(4) No filtering required if noise is below 10 mV_{PP}.

5.10 Video DAC Specifications

A dual-display interface equips the AM3517/05 processor. This display subsystem provides the necessary control signals to interface the memory frame buffer directly to the external displays (TV-set). Two (one per channel) 10-bit current steering DACs are inserted between the DSS and the TV set to generate the video analog signal. One of the video DACs also includes TV detection and power-down mode. Figure 5-11 shows the AM3517/05 DAC architecture.

Copyright © 2009–2014, Texas Instruments Incorporated

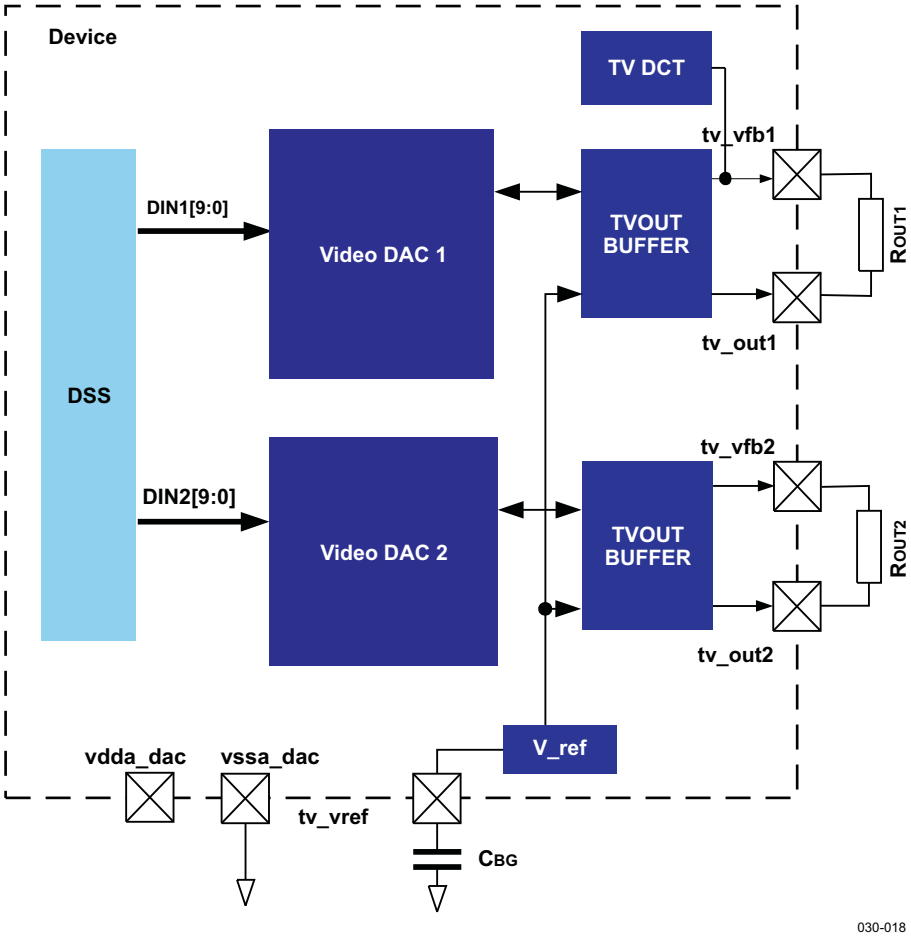

Figure 5-11. Video DAC Architecture

The following paragraphs detail the 10-bit DAC interface pinout, static and dynamic specifications, and noise requirements. The operating conditions and absolute maximum ratings are detailed in Table 5-21 and Table 5-23.

5.10.1 Interface Description

Table 5-20 summarizes the external pins of the video DAC.

Table 5-20. External Pins of 10-bit Video DAC

PIN NAME	I/O	DESCRIPTION	
tv_out1	O	TV analog output composite	DAC1 video output. An external resistor is connected between this node and tv_vfb1. The nominal value of ROUT1 is 1650 . Finally, note that this is the output node that drives the load (75).
tv_out2	O	TV analog output S-VIDEO	DAC2 video output. An external resistor is connected between this node and tv_vfb2. The nominal value of ROUT2 is 1650 . Finally, note that this is the output node that drives the load (75).
tv_vref	I	Reference output voltage from internal bandgap	A decoupling capacitor (CBG) needs to be connected for optimum performance.
tv_vfb1	O	Amplifier feedback node	Amplifier feedback node. An external resistor is connected between this node and tv_out1. The nominal value of ROUT1 is 1650 (1%).
tv_vfb2	O	Amplifier feedback node	Amplifier feedback node. An external resistor is connected between this node and tv_out2. The nominal value of ROUT2 is 1650 (1%).

Copyright © 2009–2014, Texas Instruments Incorporated

5.10.2 Electrical Specifications Over Recommended Operating Conditions

(T_{MIN} to T_{MAX}, vdda_dac = 1.8 V, $R_{OUT1/2}$ = 1650Ω , R_{LOAD} = 75Ω , unless otherwise noted)

Table 5-21. DAC Static Electrical Specification

PARAMETER		CONDITIONS/ASSUMPTIONS	MIN	TYP	MAX	UNIT
R	Resolution			10		Bits
DC ACCURACY						
INL (1)	Integral nonlinearity		1		1	LSB
DNL (2)	Differential nonlinearity		1		1	LSB
ANALOG OUTPUT						
-	Full-scale output voltage	R_{LOAD} = 75Ω	0,7	0.88	1	V
-	Output offset voltage			50		mV
-	Output offset voltage drift			20		mV/C
-	Gain error		17		19	% FS
R_{VOUT}	Output impedance		67.5	75	82.5	
REFERENCE						
V_{REF}	Reference voltage range		0.525	0.55	0.575	V
-	Reference noise density	100-kHz reference noise bandwidth		129		
R_{SET}	Full-scale current adjust resistor		3700	4000	4200	
P_{SRR}	Reference PSRR (3) (Up to 6 MHz)			40		dB
POWER CONSUMPTION						
$I_{vdda-up}$	Analog Supply Current (4)	2 channels, no load		8		mA
-	Analog supply driving a 75- load (RMS)	2 channels		50		mA
$I_{vdda-up}$ (peak)	Peak analog supply current:	Lasts less than 1 ns		60		mA
I_{vdd-up}	Digital supply current (5)	Measured at f_{CLK} = 54 MHz, f_{OUT} = 2 MHz sine wave, vdd = 1.3 V		2		mA
$I_{vdd-up\ (peak)}$	Peak digital supply current (6)	Lasts less than 1 ns		2.5		mA
$I_{vdda-down}$	Analog power at power-down	T = 30C, vdda = 1.8 V		1.5		mA
$I_{vdd-down}$	Digital power at power-down	T = 30C, vdd = 1.3 V		1		mA

(1) The INL is measured at the output of the DAC (accessible at an external pin during bypass mode).
(2) The DNL is measured at the output of the DAC (accessible at an external pin during bypass mode).
(3) Assuming a capacitor of 0.1 F at the tv_ref node.
(4) The analog supply current I_{vdda} is directly proportional to the full-scale output current IFS and is insensitive to f_{CLK}
(5) The digital supply current I_{VDD} is dependent on the digital input waveform, the DAC update rate f_{CLK}, and the digital supply VDD.
(6) The peak digital supply current occurs at full-scale transition for duration less than 1 ns.

Copyright © 2009–2014, Texas Instruments Incorporated

(T_{MIN} to T_{MAX}, vdda_dac = 1.8 V, $R_{OUT1/2}$ = 1650 , R_{LOAD} = 75 , unless otherwise noted)

Table 5-22. Video DAC Dynamic Electrical Specification

PARAMETER		CONDITIONS/ASSUMPTIONS	MIN	TYP	MAX	UNIT
f_{CLK} (1)	Output update rate	Equal to input clock frequency		54		MHz
	Clock jitter	rms clock jitter required in order to assure 10-bit accuracy			40	ps
	Attenuation at 5.1 MHz	Corner frequency for signal	0.1	0.5	1.5	dB
	Attenuation at 54 MHz (1)	Image frequency	25	30	33	dB
t_{ST}	Output settling time	Time from the start of the output transition to output within 1 LSB of final value.		85		ns
t_{Rout}	Output rise time	Measured from 10% to 90% of full-scale transition		25		ns
t_{Fout}	Output fall time	Measured from 10% to 90% of full-scale transition		25		ns
BW	Signal bandwidth			6		MHz
	Differential gain (2)			1.5%		
	Differential phase (2)			1		deg.
SFDR	Within bandwidth	f_{CLK} = 54 MHz, f_{OUT} = 1 MHz		45		dB
SNR	Signal-to-noise ratio 1 kHz to 6 MHz bandwidth	f_{CLK} = 54 MHz, f_{OUT} = 1 MHz		55 (3)		dB
PSRR	Power supply rejection ratio	Up to 6 MHz		20 (4)		dB
Crosstalk	Between the two video channels			50	40	dB

(1) For internal input clock information, For more information, see the *Device Display Interface Subsystem Reference Guide* [SPRUFV2].
(2) The differential gain and phase value is for dc coupling. Note that there is degradation for the ac coupling.
(3) The SNR value is for dc coupling. Note that there is a 6-dB degradation for ac coupling.
(4) The PSSR value is for dc coupling. Note that there is a 10-dB degradation for ac coupling.

Copyright © 2009–2014, Texas Instruments Incorporated

5.10.3 Analog Supply (vdda_dac) Noise Requirements

In order to assure 10-bit accuracy of the DAC analog output, the analog supply vdda_dac has to meet the noise requirements stated in this section.

The DAC Power Supply Rejection Ratio is defined as the relative variation of the full-scale output current divided by the supply variation. Thus, it is expressed in percentage of Full-Scale Range (FSR) per volt of supply variation as shown in the following equation:

$$PSRR_{DAC} = \frac{100 \cdot \frac{\Delta I_{OUT}}{I_{OUTFS}}}{V_{AC}} \qquad \left[\%\ FSR/V\right]$$

Depending on frequency, the PSRR is defined in Table 5-23.

Table 5-23. Video DAC Power Supply Rejection Ratio

Supply Noise Frequency	PSRR % FSR/V
0 to 100 kHz	1
> 100 kHz	The rejection decreases 20 dB/dec. Example: at 1 MHz the PSRR is 10% of FSR/V

A graphic representation is shown in Figure 5-12.

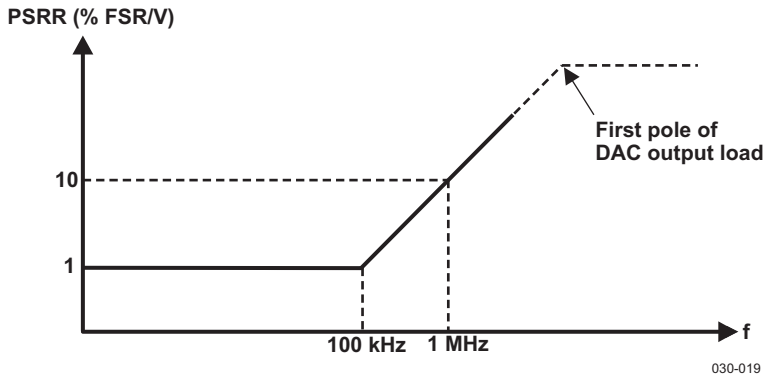

Figure 5-12. Video DAC Power Supply Rejection Ratio

To ensure that the DAC SFDR specification is met, the PSRR values and the clock jitter requirements translate to the following limits on vdda_dac (for the Video DAC).

The maximum peak-to-peak noise on vdda (ripple) is defined in Table 5-24:

Table 5-24. Video DAC Maximum Peak-to-Peak Noise on vdda_dac

Tone Frequency	Maximum Peak-to-Peak Noise on vdda_dac
0 to 100 kHz	< 30 mVpp
> 100 kHz	Decreases 20 dB/dec. Example: at 1 MHz the maximum is 3 mVpp

The maximum noise spectral density (white noise) is defined in Table 5-25:

Table 5-25. Video DAC Maximum Noise Spectral Density

Supply Noise Bandwidth	Maximum Supply Noise Density
0 to 100 kHz	< 20 V / $\sqrt{Hz}$
> 100 kHz	Decreases 20 dB/dec. Example: at 1 MHz the maximum noise density is 2 / $\sqrt{Hz}$

Copyright © 2009–2014, Texas Instruments Incorporated

Because the DAC PSRR deteriorates at a rate of 20 dB/dec after 100 kHz, it is highly recommended to have vdda_dac low pass filtered (proper decoupling) (see the illustrated application: Section 5.10.4, *External Component Value Choice*).

5.10.4 External Component Value Choice

The full-scale output voltage V_{OUTMAX} is regulated by the reference amplifier, and is set by an internal resistor R_{SET}. I_{OUTMAX} can be expressed as:

$I_{OUTMAX} = I_{REF} /8 * (63 + 15/16)$ (1)

Where:

$V_{REF} = 0.5V$ (2)

$I_{REF} = V_{REF}/R_{SET}$ (3)

The output current I_{OUT} appearing at DAC output is a function of both the input code and I_{OUTMAX} and can be expressed as:

$I_{OUT} = (DAC_CODE/1023) * I_{OUTMAX}$ (4)

Where:

DAC_CODE = 0 to 1023 is the DAC input code in decimal. (5)

The output voltage is:

$V_{OUT} = I_{OUT} *N* R_{CABLE}$ (6)

Where:

(N = amplifier gain = 21) (7)

$R_{CABLE}\Omega$ (cable typical impedance) (8)

The TV-out buffer requires a per channel external resistors: $R_{OUT1/2}$. The equation below can be used to select different resistor values (if necessary):

$R_{OUT} = (N+1) R_{CABLE} = 1650\Omega$ (9)

Recommended parameter values are:

Table 5-26. Video DAC Recommended External Components Values

	Recommended Value	UNIT
C_{BG}	100	nF
$R_{OUT1/2}$	1650	Ω

In order to limit the reference noise bandwidth and to suppress transients on V_{REF}, it is necessary to connect a large decoupling capacitor ©$_{BG}$) between the tv_vref and vssa_dac pins.

Copyright © 2009–2014, Texas Instruments Incorporated

6 Timing Requirements and Switching Characteristics

Note: The timing data shown is ***preliminary*** data and is subject to change in future revisions.

6.1 Timing Test Conditions

All timing requirements and switching characteristics are valid over the recommended operating conditions of Table 5-3, unless otherwise specified.

6.2 Interface Clock Specifications

6.2.1 Interface Clock Terminology

The Interface clock is used at the system level to sequence the data and/or control transfers accordingly with the interface protocol.

6.2.2 Interface Clock Frequency

The two interface clock characteristics are:

- The maximum clock frequency
- The maximum operating frequency

The interface clock frequency documented in this document is the maximum clock frequency, which corresponds to the maximum frequency programmable on this output clock. This frequency defines the maximum limit supported by the AM3517/05 IC and does not take into account any system consideration (PCB, peripherals).

The system designer will have to consider these system considerations and AM3517/05 IC timings characteristics as well, to define properly the maximum operating frequency, which corresponds to the maximum frequency supported to transfer the data on this interface.

6.2.3 Clock Jitter Specifications

Jitter is a phase noise, which may alter different characteristics of a clock signal. The jitter specified in this document is the time difference between the typical cycle period and the actual cycle period affected by noise sources on the clock. The cycle (or period) jitter terminology identifies this type of jitter.

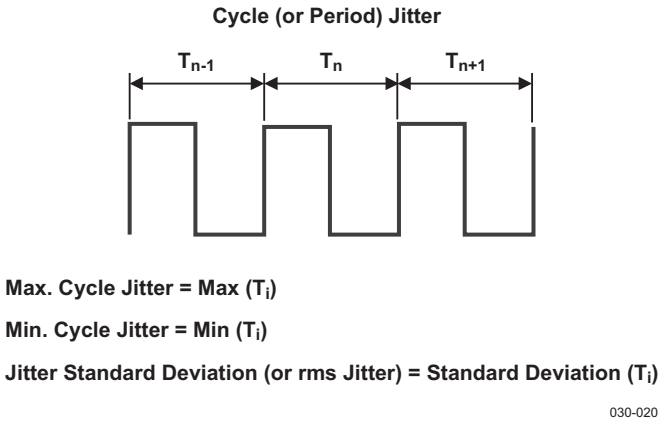

Figure 6-1. Cycle (or Period) Jitter

6.2.4 Clock Duty Cycle Error

The maximum duty cycle error is the difference between the absolute value of the maximum high-level pulse duration or the maximum low-level pulse duration and the typical pulse duration value:

- Maximum pulse duration = typical pulse duration + maximum duty cycle error
- Minimum pulse duration = typical pulse duration - maximum duty cycle error

6.3 Timing Parameters

The timing parameter symbols used in the timing requirement and switching characteristic tables are created in accordance with JEDEC Standard 100. To shorten the symbols, some pin names and other related terminologies have been abbreviated as follows:

Table 6-1. Timing Parameters

LOWERCASE SUBSCRIPTS	
Symbols	**Parameter**
c	Cycle time (period)
d	Delay time
dis	Disable time
en	Enable time
h	Hold time
su	Setup time
START	Start bit
t	Transition time
v	Valid time
w	Pulse duration (width)
X	Unknown, changing, or dont care level
H	High
L	Low
V	Valid
IV	Invalid
AE	Active Edge
FE	First Edge
LE	Last Edge
Z	High impedance

Copyright © 2009–2014, Texas Instruments Incorporated

6.4 External Memory Interfaces

The AM3517/05 processor includes the following external memory interfaces:

- General-purpose memory controller (GPMC)
- SDRAM controller (SDRC)

6.4.1 General-Purpose Memory Controller (GPMC)

The GPMC is the AM3517/05 unified memory controller used to interface external memory devices such as:

- Asynchronous SRAM-like memories and ASIC devices
- Asynchronous page mode and synchronous burst NOR flash
- NAND flash

6.4.1.1 GPMC/NOR Flash Interface Synchronous Timing

Table 6-2 through Table 6-4 assume testing over the recommended operating conditions and electrical characteristic conditions.

Table 6-2. GPMC/NOR Flash Synchronous Mode Timing Conditions

TIMING CONDITION PARAMETER		1.8V, 3.3V		UNIT
		MIN	MAX	
Input Conditions				
t_R	Input signal rise time	0.3	1.8	ns
t_F	Input signal fall time	0.3	1.8	ns
Output Conditions				
C_{LOAD}	Output load capacitance	30		pF

Table 6-3. GPMC/NOR Flash Interface Timing Requirements Synchronous Mode

NO.	PARAMETER		1.8V, 3.3V		UNIT
			MIN	MAX	
F12	$t_{su(DV-CLKH)}$	Setup time, read gpmc_d[15:0] valid before gpmc_clk high	2.021		ns
F13	$t_{h(CLKH-DV)}$	Hold time, gpmc_d[15:0] valid after gpmc_clk high	3.403		ns
F21	$t_{su(WAITV-CLKH)}$	Setup time, gpmc_waitx(1) valid before gpmc_clk high	3.782		ns
F22	$t_{h(CLKH-WAITV)}$	Hold Time, gpmc_waitx(1) valid after gpmc_clk high	3.343		ns

(1) Wait monitoring support is limited to a WaitMonitoringTime value > 0.

Copyright © 2009–2014, Texas Instruments Incorporated

Table 6-4. GPMC/NOR Flash Interface Switching Characteristics Synchronous Mode

NO.	PARAMETER		1.8V, 3.3V		UNIT
			MIN	MAX	
F0	$t_{c(CLK)}$	Cycle time(1), output clock gpmc_clk period	10		ns
F1	$t_{w(CLKH)}$	Typical pulse duration, output clock gpmc_clk high	0.5 P(2)	0.5 P(2)	ns
F1	$t_{w(CLKL)}$	Typical pulse duration, output clock gpmc_clk low	0.5 P(2)	0.5 P(2)	ns
	$t_{dc(CLK)}$	Duty cycle error, output clk gpmc_clk	-500	500	ps
	$t_{j(CLK)}$	Jitter standard deviation(3), output clock gpmc_clk		33.30	ps
	$t_{R(CLK)}$	Rise time, output clock gpmc_clk		1.6	ns
	$t_{F(CLK)}$	Fall time, output clock gpmc_clk		1.6	ns
	$t_{R(DO)}$	Rise time, output data		2	ns
	$t_{F(DO)}$	Fall time, output data		2	ns
F2	$t_{d(CLKH-nCSV)}$	Delay time, gpmc_clk rising edge to gpmc_ncsx(4) transition	F(5) - 1.9	F(5) + 3.3	ns
F3	$t_{d(CLKH-nCSIV)}$	Delay time, gpmc_clk rising edge to gpmc_ncsx(4) invalid	E(6) - 1.9	E(6) + 3.3	ns
F4	$t_{d(ADDV-CLK)}$	Delay time, address bus valid to gpmc_clk first edge	B(7) - 4.1	B(7) + 2.1	ns
F5	$t_{d(CLKH-ADDIV)}$	Delay time, gpmc_clk rising edge to gpmc_a[16:1] invalid	-2.103		ns
F6	$t_{d(nBEV-CLK)}$	Delay time, gpmc_nbe0_cle, gpmc_nbe1 valid to gpmc_clk first edge	B(7) - 1.37	B(7) + 2.1	ns
F7	$t_{d(CLKH-nBEIV)}$	Delay time, gpmc_clk rising edge to gpmc_nbe0_cle, gpmc_nbe1 invalid	D(8) - 2.1	D(8) + 1.1	ns

(1) Related to the gpmc_clk output clock maximum and minimum frequencies programmable in the I/F module by setting the GPMC_CONFIG1_CSx configuration register bit field GpmcFCLKDivider.
(2) P = gpmc_clk period
(3) The jitter probability density can be approximated by a Gaussian function.
(4) In gpmc_ncsx, x is equal to 0, 1, 2, 3, 4, 5, 6, or 7. In gpmc_waitx, x is equal to 0, 1, 2, or 3.
(5) **For nCS falling edge (CS activated):**
- **Case GpmcFCLKDivider = 0:**
  - F = 0.5 * CSExtraDelay * GPMC_FCLK
- **Case GpmcFCLKDivider = 1:**
  - F = 0.5 * CSExtraDelay * GPMC_FCLK if (ClkActivationTime and CSOnTime are odd) or (ClkActivationTime and CSOnTime are even)
  - F = (1 + 0.5 * CSExtraDelay) * GPMC_FCLK otherwise
- **Case GpmcFCLKDivider = 2:**
  - F = 0.5 * CSExtraDelay * GPMC_FCLK if ((CSOnTime - ClkActivationTime) is a multiple of 3)
  - F = (1 + 0.5 * CSExtraDelay) * GPMC_FCLK if ((CSOnTime - ClkActivationTime - 1) is a multiple of 3)
  - F = (2 + 0.5 * CSExtraDelay) * GPMC_FCLK if ((CSOnTime - ClkActivationTime - 2) is a multiple of 3)

(6) **For single read:** E = (CSRdOffTime - AccessTime) * (TimeParaGranularity + 1) * GPMC_FCLK
For burst read: E = (CSRdOffTime - AccessTime) * (TimeParaGranularity + 1) * GPMC_FCLK
For burst write: E = (CSWrOffTime - AccessTime) * (TimeParaGranularity + 1) * GPMC_FCLK
(7) B = ClkActivationTime * GPMC_FCLK
(8) **For single read:** D = (RdCycleTime - AccessTime) * (TimeParaGranularity + 1) * GPMC_FCLK
For burst read: D = (RdCycleTime - AccessTime) * (TimeParaGranularity + 1) * GPMC_FCLK
For burst write: D = (WrCycleTime - AccessTime) * (TimeParaGranularity + 1) * GPMC_FCLK

Copyright © 2009–2014, Texas Instruments Incorporated

Table 6-4. GPMC/NOR Flash Interface Switching Characteristics Synchronous Mode (continued)

NO.	PARAMETER		1.8V, 3.3V		UNIT
			MIN	MAX	
F8	$t_{d(CLKH-nADV)}$	Delay time, gpmc_clk rising edge to gpmc_nadv_ale transition	G(9) - 1.9	G(9) + 4.1	ns
F9	$t_{d(CLKH-nADVIV)}$	Delay time, gpmc_clk rising edge to gpmc_nadv_ale invalid	D(8) - 1.9	D(8) + 4.1	ns
F10	$t_{d(CLKH-nOE)}$	Delay time, gpmc_clk rising edge to gpmc_noe transition	H(10) - 2.1	H(10) + 2.1	ns
F11	$t_{d(CLKH-nOEIV)}$	Delay time, gpcm rising edge to gpmc_noe invalid	E(6) - 2.1	E(6) + 2.1	ns

(9) **For ADV falling edge (ADV activated):**
- **Case GpmcFCLKDivider = 0:**
  - G = 0.5 * ADVExtraDelay * GPMC_FCLK
- **Case GpmcFCLKDivider = 1:**
  - G = 0.5 * ADVExtraDelay * GPMC_FCLK if (ClkActivationTime and ADVOnTime are odd) or (ClkActivationTime and ADVOnTime are even)
  - G = (1 + 0.5 * ADVExtraDelay) * GPMC_FCLK otherwise
- **Case GpmcFCLKDivider = 2:**
  - G = 0.5 * ADVExtraDelay * GPMC_FCLK if ((ADVOnTime - ClkActivationTime) is a multiple of 3)
  - G = (1 + 0.5 * ADVExtraDelay) * GPMC_FCLK if ((ADVOnTime - ClkActivationTime - 1) is a multiple of 3)
  - G = (2 + 0.5 * ADVExtraDelay) * GPMC_FCLK if ((ADVOnTime --ClkActivationTime - 2) is a multiple of 3)

For ADV rising edge (ADV deactivated) in Reading mode:
- **Case GpmcFCLKDivider = 0:**
  - G = 0.5 * ADVExtraDelay * GPMC_FCLK
- **Case GpmcFCLKDivider = 1:**
  - G = 0.5 * ADVExtraDelay * GPMC_FCLK if (ClkActivationTime and ADVRdOffTime are odd) or (ClkActivationTime and ADVRdOffTime are even)
  - G = (1 + 0.5 * ADVExtraDelay) * GPMC_FCLK otherwise
- Case GpmcFCLKDivider = 2:
  - G = 0.5 * ADVExtraDelay * GPMC_FCLK if ((ADVRdOffTime - ClkActivationTime) is a multiple of 3)
  - G = (1 + 0.5 * ADVExtraDelay) * GPMC_FCLK if ((ADVRdOffTime --ClkActivationTime --1) is a multiple of 3)
  - G = (2 + 0.5 * ADVExtraDelay) * GPMC_FCLK if ((ADVRdOffTime --ClkActivationTime - 2) is a multiple of 3)

For ADV rising edge (ADV deactivated) in Writing mode:
- **Case GpmcFCLKDivider = 0:**
  - G = 0.5 * ADVExtraDelay * GPMC_FCLK
- **Case GpmcFCLKDivider = 1:**
  - G = 0.5 * ADVExtraDelay * GPMC_FCLK if (ClkActivationTime and ADVWrOffTime are odd) or (ClkActivationTime and ADVWrOffTime are even)
  - G = (1 + 0.5 * ADVExtraDelay) * GPMC_FCLK otherwise
- **Case GpmcFCLKDivider = 2:**
  - G = 0.5 * ADVExtraDelay * GPMC_FCLK if ((ADVWrOffTime - ClkActivationTime) is a multiple of 3)
  - G = (1 + 0.5 * ADVExtraDelay) * GPMC_FCLK if ((ADVWrOffTime - ClkActivationTime - 1) is a multiple of 3)
  - G = (2 + 0.5 * ADVExtraDelay) * GPMC_FCLK if ((ADVWrOffTime - ClkActivationTime - 2) is a multiple of 3)

(10) **For OE falling edge (OE activated) / IO DIR rising edge (Data Bus input direction):**
- **Case GpmcFCLKDivider = 0:**
  - H = 0.5 * OEExtraDelay * GPMC_FCLK
- **Case GpmcFCLKDivider = 1:**
  - H = 0.5 * OEExtraDelay * GPMC_FCLK if (ClkActivationTime and OEOnTime are odd) or (ClkActivationTime and OEOnTime are even)
  - H = (1 + 0.5 * OEExtraDelay) * GPMC_FCLK otherwise
- **Case GpmcFCLKDivider = 2:**
  - H = 0.5 * OEExtraDelay * GPMC_FCLK if ((OEOnTime - ClkActivationTime) is a multiple of 3)
  - H = (1 + 0.5 * OEExtraDelay) * GPMC_FCLK if ((OEOnTime - ClkActivationTime - 1) is a multiple of 3)
  - H = (2 + 0.5 * OEExtraDelay) * GPMC_FCLK if ((OEOnTime - ClkActivationTime - 2) is a multiple of 3)

For OE rising edge (OE deactivated):
- **GpmcFCLKDivider = 0:**
  - H = 0.5 * OEExtraDelay * GPMC_FCLK
- **Case GpmcFCLKDivider = 1:**
  - H = 0.5 * OEExtraDelay * GPMC_FC if (ClkActivationTime and OEOffTime are odd) or (ClkActivationTime and OEOffTime are even)
  - H = (1 + 0.5 * OEExtraDelay) * GPMC_FCLK otherwise
- **Case GpmcFCLKDivider = 2:**
  - H = 0.5 * OEExtraDelay * GPMC_FCLK if ((OEOffTime - ClkActivationTime) is a multiple of 3)
  - H = (1 + 0.5 * OEExtraDelay) * GPMC_FCLK if ((OEOffTime - ClkActivationTime - 1) is a multiple of 3)
  - H = (2 + 0.5 * OEExtraDelay) * GPMC_FCLK if ((OEOffTime - ClkActivationTime - 2) is a multiple of 3)

Copyright © 2009–2014, Texas Instruments Incorporated

Table 6-4. GPMC/NOR Flash Interface Switching Characteristics Synchronous Mode (continued)

NO.	PARAMETER			1.8V, 3.3V		UNIT
				MIN	MAX	
F14	$t_{d(CLKH-nWE)}$	Delay time, gpmc_clk rising edge to gpmc_nwe transition		I(11) - 1.9	I(11) + 4.1	ns
F15	$t_{d(CLKH-Data)}$	Delay time, gpmc_clk rising edge to data bus transition		J(12) - 2.1	J(12) + 1.1	ns
F17	$t_{d(CLKH-nBE)}$	Delay time, gpmc_clk rising edge to gpmc_nbex_cle transition		J(12) - 2.1	J(12) + 1.1	ns
F18	$t_{W(nCSV)}$	Pulse duration, gpmc_ncsx(4) low	Read	A(13)		ns
			Write	A(13)		ns
F19	$t_{W(nBEV)}$	Pulse duration, gpmc_nbe0_cle, gpmc_nbe1 low	Read	C(14)		ns
			Write	C(14)		ns
F20	$t_{W(nADVV)}$	Pulse duration, gpmc_nadv_ale low	Read	K(15)		ns
			Write	K(15)		ns
F23	$t_{d(CLKH-IODIR)}$	Delay time, gpmc_clk rising edge to gpmc_io_dir high (IN direction)		H(10) - 2.1	H(10) + 4.1	ns
F24	$t_{d(CLKH-IODIRIV)}$	Delay time, gpmc_clk rising edge to gpmc_io_dir low (OUT direction)		M(16) - 2.1	M(16) + 4.1	ns

(11) **For WE falling edge (WE activated):**
- **Case GpmcFCLKDivider = 0:**
  - I = 0.5 * WEExtraDelay * GPMC_FCLK
- **Case GpmcFCLKDivider = 1:**
  - I = 0.5 * WEExtraDelay * GPMC_FCLK if (ClkActivationTime and WEOnTime are odd) or (ClkActivationTime and WEOnTime are even)
  - I = (1 + 0.5 * WEExtraDelay) * GPMC_FCLK otherwise
- **Case GpmcFCLKDivider = 2:**
  - I = 0.5 * WEExtraDelay * GPMC_FCLK if ((WEOnTime - ClkActivationTime) is a multiple of 3)
  - I = (1 + 0.5 * WEExtraDelay) * GPMC_FCLK if ((WEOnTime --ClkActivationTime - 1) is a multiple of 3)
  - I = (2 + 0.5 * WEExtraDelay) * GPMC_FCLK if ((WEOnTime - ClkActivationTime - 2) is a multiple of 3)

For WE rising edge (WE deactivated):
- **Case GpmcFCLKDivider = 0:**
  - I = 0.5 * WEExtraDelay * GPMC_FCLK
- **Case GpmcFCLKDivider = 1:**
  - I = 0.5 * WEExtraDelay * GPMC_FCLK if (ClkActivationTime and WEOffTime are odd) or (ClkActivationTime and WEOffTime are even)
  - I = (1 + 0.5 * WEExtraDelay) * GPMC_FCLK otherwise
- **Case GpmcFCLKDivider = 2:**
  - I = 0.5 * WEExtraDelay * GPMC_FCLK if ((WEOffTime - ClkActivationTime) is a multiple of 3)
  - I = (1 + 0.5 * WEExtraDelay) * GPMC_FCLK if ((WEOffTime - ClkActivationTime - 1) is a multiple of 3)
  - I = (2 + 0.5 * WEExtraDelay) * GPMC_FCLK if ((WEOffTime - ClkActivationTime - 2) is a multiple of 3)

(12) J = GPMC_FCLK period

(13) **For single read:** A = (CSRdOffTime - CSOnTime) * (TimeParaGranularity + 1) * GPMC_FCLK period
For burst read: A = (CSRdOffTime - CSOnTime + (n 1) * PageBurstAccessTime) * (TimeParaGranularity + 1) * GPMC_FCLK period
For burst write: A = (CSWrOffTime - CSOnTime + (n 1) * PageBurstAccessTime) * (TimeParaGranularity + 1) * GPMC_FCLK period with n being the page burst access number.

(14) **For single read:** C = RdCycleTime * (TimeParaGranularity + 1) * GPMC_FCLK
For burst read: C = (RdCycleTime + (n 1) * PageBurstAccessTime) * (TimeParaGranularity + 1) * GPMC_FCLK
For burst write: C = (WrCycleTime + (n 1) * PageBurstAccessTime) * (TimeParaGranularity + 1) * GPMC_FCLK with n being the page burst access number.

(15) **For read:** K = (ADVRdOffTime - ADVOnTime) * (TimeParaGranularity + 1) * GPMC_FCLK
For write: K = (ADVWrOffTime - ADVOnTime) * (TimeParaGranularity + 1) * GPMC_FCLK

(16) M = (RdCycleTime - AccessTime) * (TimeParaGranularity + 1) * GPMC_FCLK
Above M parameter expression is given as one example of GPMC programming. IO DIR signal will go from IN to OUT after both RdCycleTime and BusTurnAround completion. Behavior of IO direction signal does depend on kind of successive Read/Write accesses performed to Memory and multiplexed or non-multiplexed memory addressing scheme, bus keeping feature enabled or not. IO DIR behavior is automatically handled by GPMC controller.

Copyright © 2009–2014, Texas Instruments Incorporated

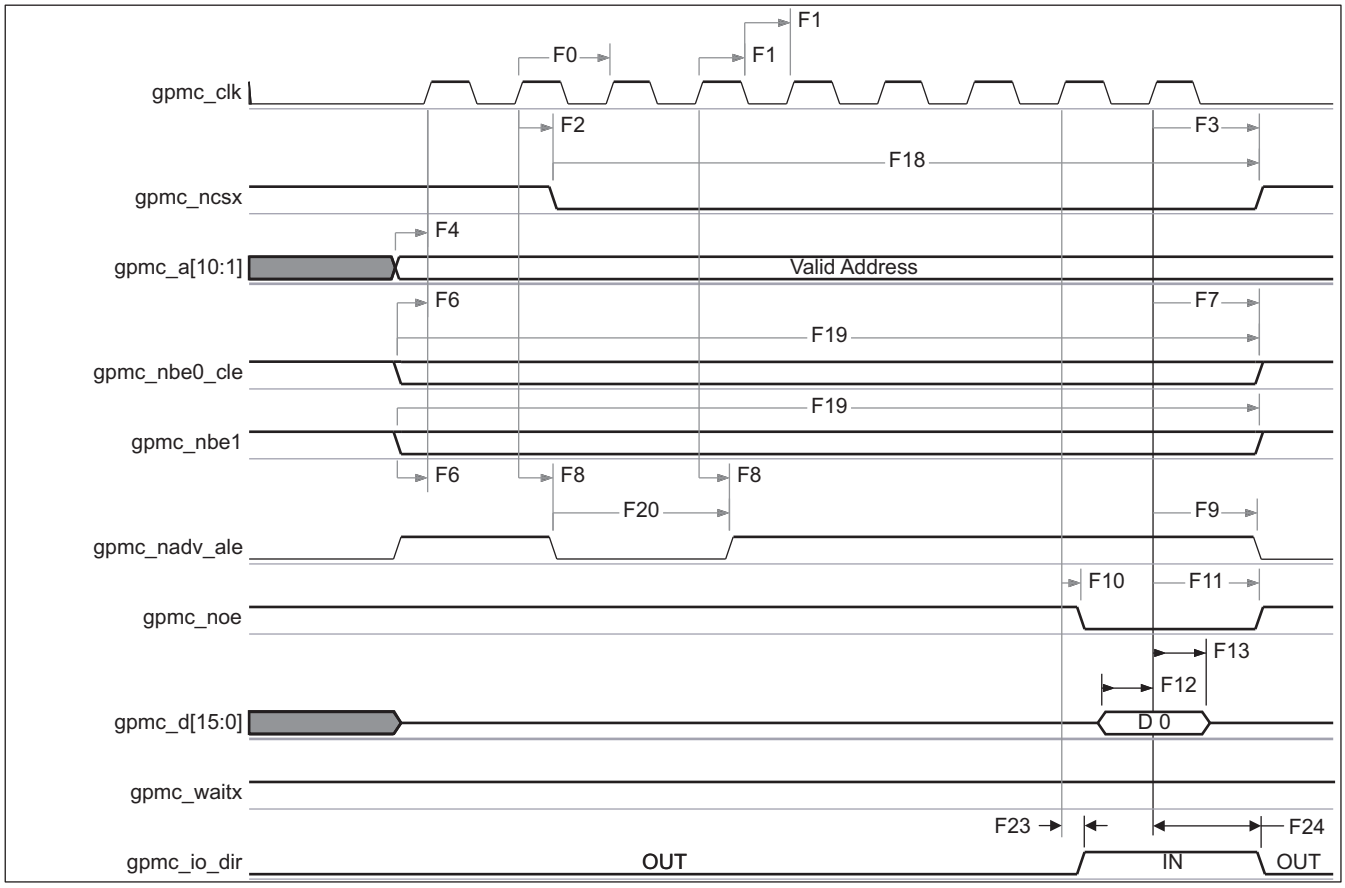

In gpmc_ncsx, x is equal to 0, 1, 2, 3, 4, 5, 6, or 7. In gpmc_waitx, x is equal to 0, 1, 2, or 3.

Figure 6-2. GPMC/NOR Flash Synchronous Single Read (GpmcFCLKDivider = 0)

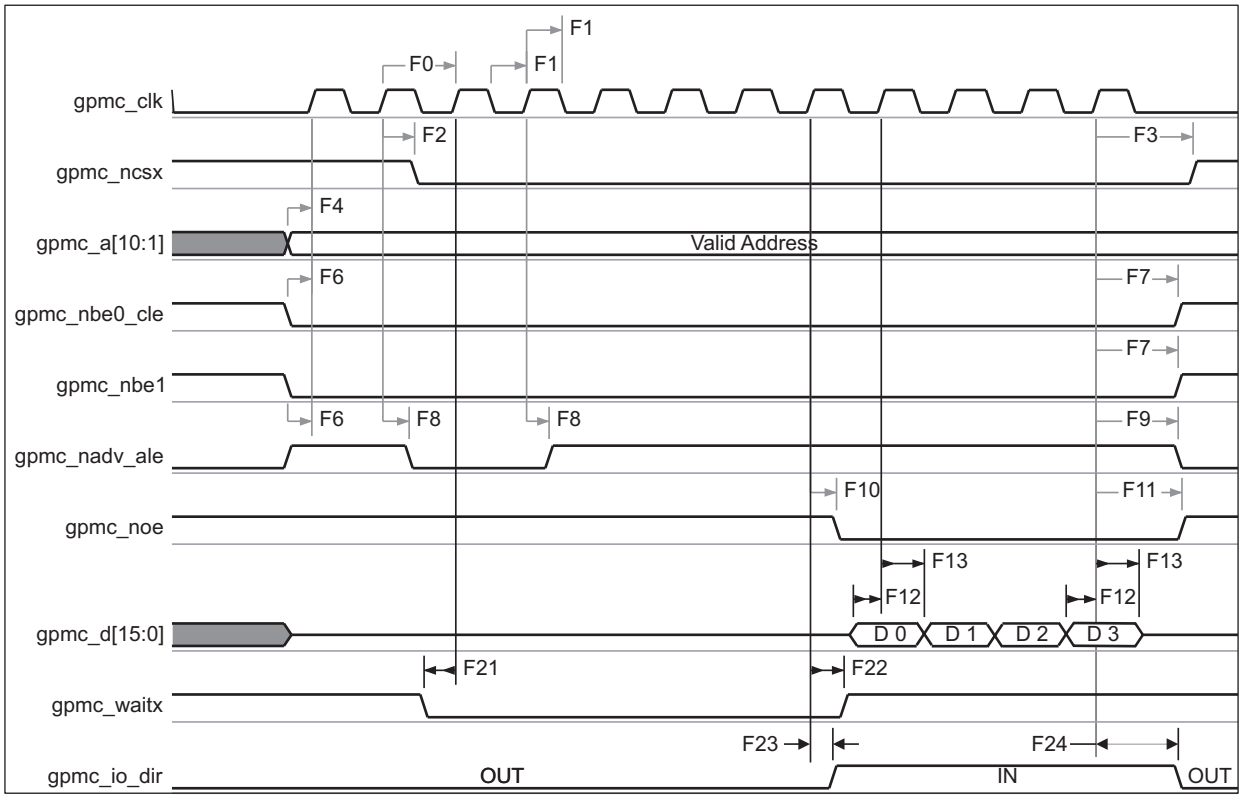

In gpmc_ncsx, x is equal to 0, 1, 2, 3, 4, 5, 6, or 7. In gpmc_waitx, x is equal to 0, 1, 2, or 3.

Figure 6-3. GPMC/NOR Flash Synchronous Burst Read 4x16-bit (GpmcFCLKDivider = 0)

Copyright © 2009–2014, Texas Instruments Incorporated

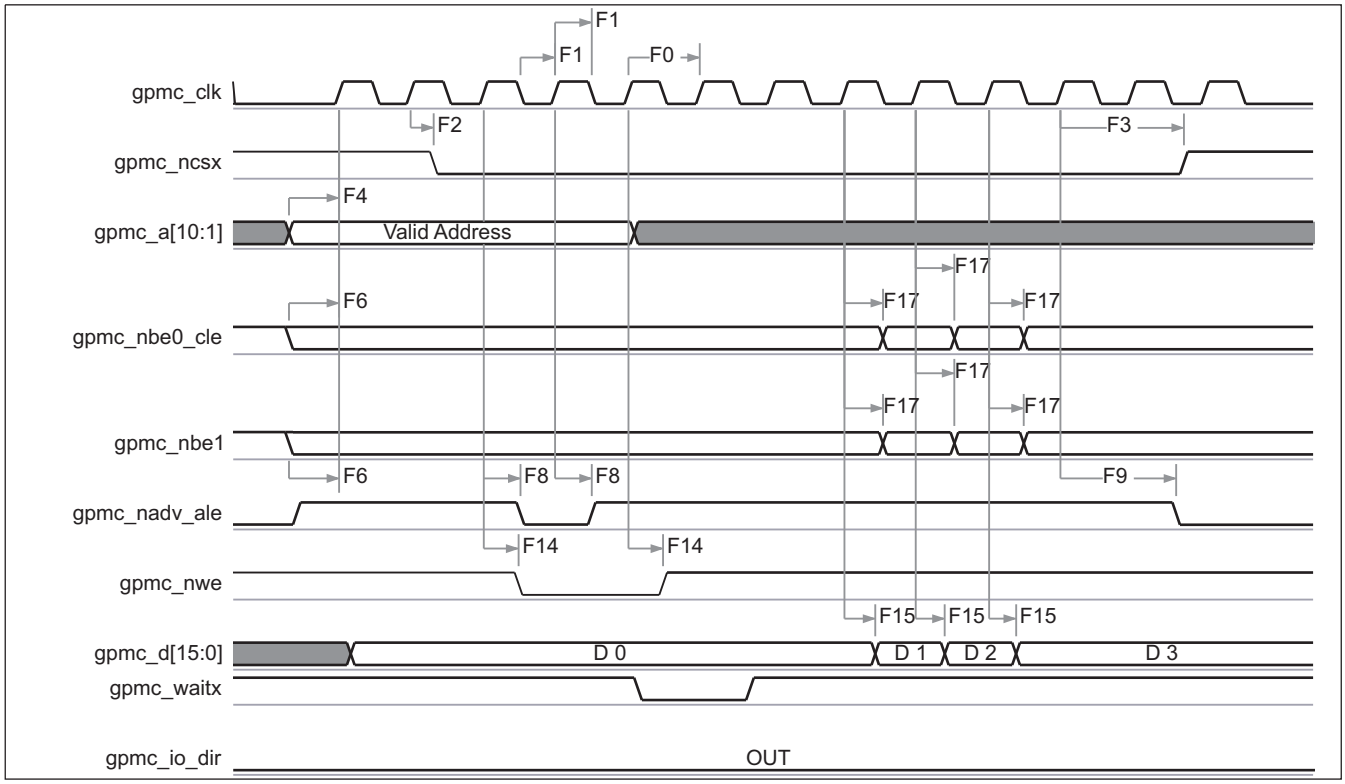

In gpmc_ncsx, x is equal to 0, 1, 2, 3, 4, 5, 6, or 7. In gpmc_waitx, x is equal to 0, 1, 2, or 3.

Figure 6-4. GPMC/NOR Flash Synchronous Burst Write (GpmcFCLKDivider = 0)

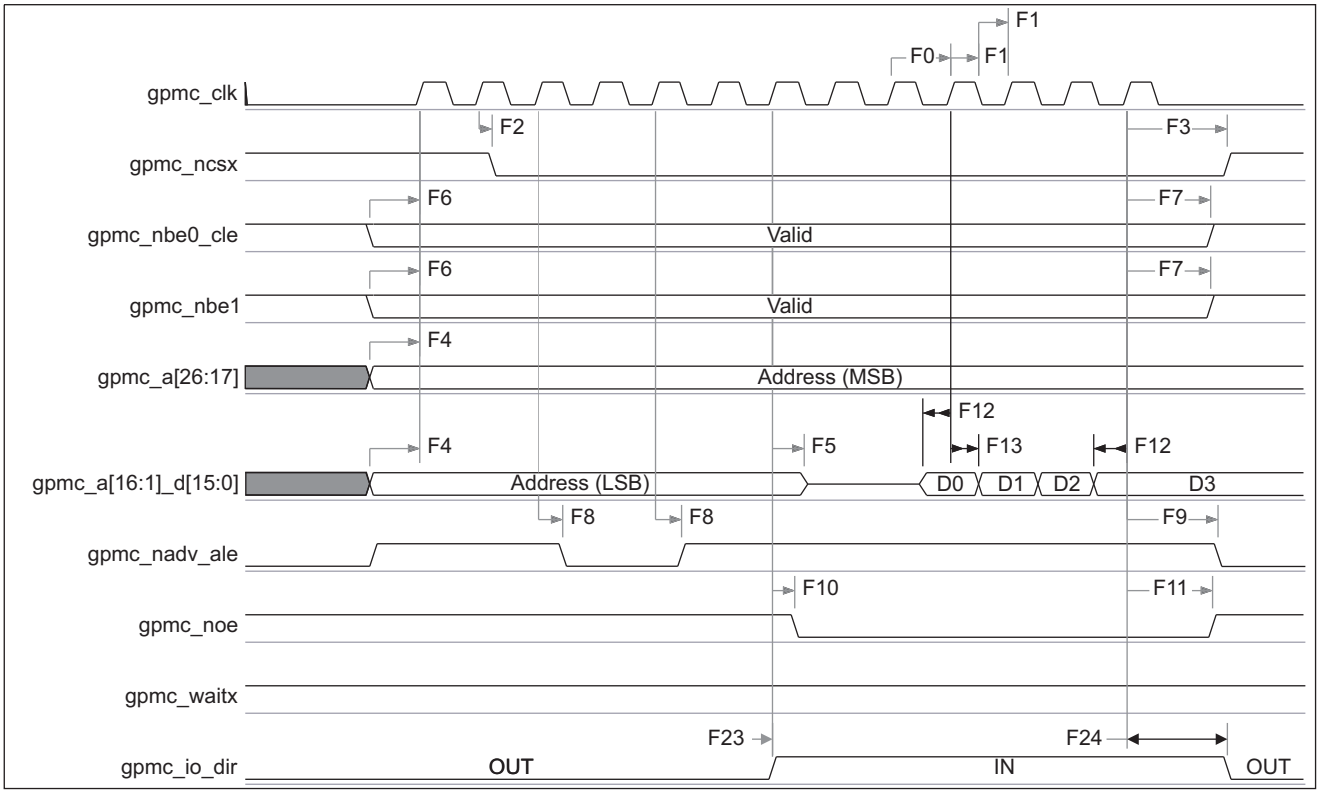

In gpmc_ncsx, x is equal to 0, 1, 2, 3, 4, 5, 6, or 7. In gpmc_waitx, x is equal to 0, 1, 2, or 3.

Figure 6-5. GPMC/Multiplexed NOR Flash Synchronous Burst Read

Copyright © 2009–2014, Texas Instruments Incorporated

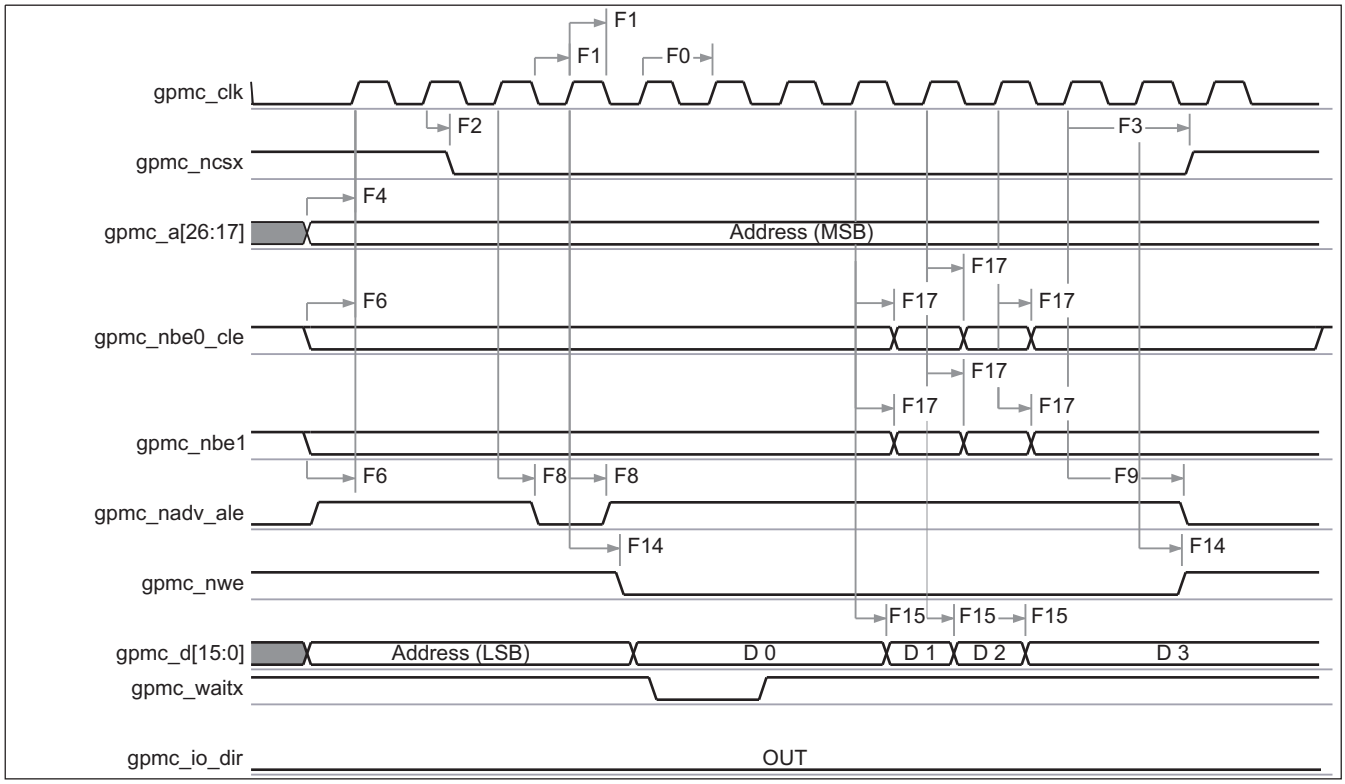

In gpmc_ncsx, x is equal to 0, 1, 2, 3, 4, 5, 6, or 7. In gpmc_waitx, x is equal to 0, 1, 2, or 3.

Figure 6-6. GPMC/Multiplexed NOR Flash Synchronous Burst Write

6.4.1.2 GPMC/NOR Flash Interface Asynchronous Timing

Table 6-5 through Table 6-8 assume testing over the recommended operating conditions and electrical characteristic conditions.

Table 6-5. GPMC/NOR Flash Asynchronous Mode Timing Conditions

TIMING CONDITION PARAMETER		VALUE	UNIT
Input Conditions			
t_R	Input signal rise time	1.8	ns
t_F	Input signal fall time	1.8	ns
Output Conditions			
C_{LOAD}	Output load capacitance	30	pF

Table 6-6. GPMC/NOR Flash Interface Asynchronous Timing – Internal Parameters (1) (2)

NO.	PARAMETER	1.8V,3.3V		UNIT
		MIN	MAX	
FI1	Maximum output data generation delay from internal functional clock		6.5	ns
FI2	Maximum input data capture delay by internal functional clock		4	ns
FI3	Maximum device select generation delay from internal functional clock		6.5	ns
FI4	Maximum address generation delay from internal functional clock		6.5	ns
FI5	Maximum address valid generation delay from internal functional clock		6.5	ns
FI6	Maximum byte enable generation delay from internal functional clock		6.5	ns

(1) The internal parameters table must be used to calculate Data Access Time stored in the corresponding CS register bit field.
(2) Internal parameters are referred to the GPMC functional internal clock which is not provided externally.

Copyright © 2009–2014, Texas Instruments Incorporated

Table 6-6. GPMC/NOR Flash Interface Asynchronous Timing – Internal Parameters(1) (2) (continued)

NO.	PARAMETER	1.8V,3.3V		UNIT
		MIN	MAX	
FI7	Maximum output enable generation delay from internal functional clock		6.5	ns
FI8	Maximum write enable generation delay from internal functional clock		6.5	ns
FI9	Maximum functional clock skew		100	ps

Table 6-7. GPMC/NOR Flash Interface Timing Requirements – Asynchronous Mode

NO.	PARAMETER		1.8V,3.3V		UNIT
			MIN	MAX	
FA5(1)	$t_{acc(DAT)}$	Data maximum access time		H(2)	GPMC_FCLK cycles
FA20(3)	$t_{acc1-pgmode(DAT)}$	Page mode successive data maximum access time		P(4)	GPMC_FCLK cycles
FA21(5)	$t_{acc2-pgmode(DAT)}$	Page mode first data maximum access time		H(2)	GPMC_FCLK cycles

(1) The FA5 parameter provides the amount of time required to internally sample input Data. It is expressed in number of GPMC functional clock cycles. From start of read cycle and after FA5 functional clock cycles, input Data is internally sampled by active functional clock edge. FA5 value must be stored inside the AccessTime register bit field.
(2) H = AccessTime * (TimeParaGranularity + 1)
(3) The FA20 parameter provides amount of time required to internally sample successive input Page Data. It is expressed in number of GPMC functional clock cycles. After each access to input Page Data, next input Page Data is internally sampled by active functional clock edge after FA20 functional clock cycles. The FA20 value must be stored in the PageBurstAccessTime register bit field.
(4) P = PageBurstAccessTime * (TimeParaGranularity + 1)
(5) The FA21 parameter shows amount of time required to internally sample first input Page Data. It is expressed in number of GPMC functional clock cycles. From start of read cycle and after FA21 functional clock cycles, First input Page Data is internally sampled by active functional clock edge. FA21 value must be stored inside the AccessTime register bit field.

Table 6-8. GPMC/NOR Flash Interface Switching Characteristics – Asynchronous Mode

NO.	PARAMETER			1.8V/ 3.3V		UNIT
				MIN	MAX	
	$t_{R(DO)}$	Rise time, output data			2.0	ns
	$t_{F(DO)}$	Fall time, output data			2.0	ns
FA0	$t_{W(nBEV)}$	Pulse duration, gpmc_nbe0_cle, gpmc_nbe1 valid time	Read	N(12)		ns
			Write	N(12)		ns
FA1	$t_{W(nCSV)}$	Pulse duration, gpmc_ncsx(13) v low	Read	A(1)		ns
			Write	A(1)		ns
FA3	$t_{d(nCSV-nADVIV)}$	Delay time, gpmc_ncsx(13) valid to gpmc_nadv_ale invalid	Read	B(2) – 0.2	B(2) + 2.0	ns
			Write	B(2) – 0.2	B(2) + 2.0	ns
FA4	$t_{d(nCSV-nOEIV)}$	Delay time, gpmc_ncsx(13) valid to gpmc_noe invalid (Single read)		C(3) – 0.2	C(3) + 2.0	ns
FA9	$t_{d(AV-nCSV)}$	Delay time, address bus valid to gpmc_ncsx(13) valid		J(9) – 0.2	J(9) + 2.0	ns
FA10	$t_{d(nBEV-nCSV)}$	Delay time, gpmc_nbe0_cle, gpmc_nbe1 valid to gpmc_ncsx(13) valid		J(9) – 0.2	J(9) + 2.0	ns
FA12	$t_{d(nCSV-nADVV)}$	Delay time, gpmc_ncsx(13) valid to gpmc_nadv_ale valid		K(10) – 0.2	K(10) + 2.0	ns
FA13	$t_{d(nCSV-nOEV)}$	Delay time, gpmc_ncsx(13) valid to gpmc_noe valid		L(11) – 0.2	L(11) + 2.0	ns
FA14	$t_{d(nCSV-IODIR)}$	Delay time, gpmc_ncsx(13) valid to gpmc_io_dir high		L(11) – 0.2	L(11) + 2.0	ns
FA15	$t_{d(nCSV-IODIR)}$	Delay time, gpmc_ncsx(13) valid to gpmc_io_dir low		M(14) – 0.2	M(14) + 2.0	ns
FA16	$t_{w(AIV)}$	Address invalid duration between 2 successive R/W accesses		G(7)		ns

Copyright © 2009–2014, Texas Instruments Incorporated

Table 6-8. GPMC/NOR Flash Interface Switching Characteristics – Asynchronous Mode (continued)

NO.	PARAMETER		1.8V/ 3.3V		UNIT
			MIN	MAX	
FA18	$t_{d(nCSV-nOEIV)}$	Delay time, gpmc_ncsx(13) valid to gpmc_noe invalid (Burst read)	I(8) – 0.2	I(8) + 2.0	ns
FA20	$t_{w(AV)}$	Pulse duration, address valid – 2nd, 3rd, and 4th accesses	D(4)		ns
FA25	$t_{d(nCSV-nWEV)}$	Delay time, gpmc_ncsx(13) valid to gpmc_nwe valid	E(5) – 0.2	E(5) + 2.0	ns
FA27	$t_{d(nCSV-nWEIV)}$	Delay time, gpmc_ncsx(13) valid to gpmc_nwe invalid	F(6) – 0.2	F(6) + 2.0	ns
FA28	$t_{d(nWEV-DV)}$	Delay time, gpmc_ new valid to data bus valid		2.0	ns
FA29	$t_{d(DV-nCSV)}$	Delay time, data bus valid to gpmc_ncsx(13) valid	J(9) – 0.2	J(9) + 2.0	ns
FA37	$t_{d(nOEV-AIV)}$	Delay time, gpmc_noe valid to gpmc_a[16:1]_d[15:0] address phase end		2.0	ns

(1) **For single read:** A = (CSRdOffTime – CSOnTime) * (TimeParaGranularity + 1) * GPMC_FCLK
For single write: A = (CSWrOffTime – CSOnTime) * (TimeParaGranularity + 1) * GPMC_FCLK
For burst read: A = (CSRdOffTime – CSOnTime + (n – 1) * PageBurstAccessTime) * (TimeParaGranularity + 1) * GPMC_FCLK
For burst write: A = (CSWrOffTime – CSOnTime + (n – 1) * PageBurstAccessTime) * (TimeParaGranularity + 1) * GPMC_FCLK with n being the page burst access number

(2) **For reading:** B = ((ADVRdOffTime – CSOnTime) * (TimeParaGranularity + 1) + 0.5 * (ADVExtraDelay – CSExtraDelay)) * GPMC_FCLK
For writing: B = ((ADVWrOffTime – CSOnTime) * (TimeParaGranularity + 1) + 0.5 * (ADVExtraDelay – CSExtraDelay)) * GPMC_FCLK

(3) C = ((OEOffTime – CSOnTime) * (TimeParaGranularity + 1) + 0.5 * (OEExtraDelay – CSExtraDelay)) * GPMC_FCLK

(4) D = PageBurstAccessTime * (TimeParaGranularity + 1) * GPMC_FCLK

(5) E = ((WEOnTime – CSOnTime) * (TimeParaGranularity + 1) + 0.5 * (WEExtraDelay – CSExtraDelay)) * GPMC_FCLK

(6) F = ((WEOffTime – CSOnTime) * (TimeParaGranularity + 1) + 0.5 * (WEExtraDelay – CSExtraDelay)) * GPMC_FCLK

(7) G = Cycle2CycleDelay * GPMC_FCLK

(8) I = ((OEOffTime + (n – 1) * PageBurstAccessTime – CSOnTime) * (TimeParaGranularity + 1) + 0.5 * (OEExtraDelay – CSExtraDelay)) * GPMC_FCLK

(9) J = (CSOnTime * (TimeParaGranularity + 1) + 0.5 * CSExtraDelay) * GPMC_FCLK

(10) K = ((ADVOnTime – CSOnTime) * (TimeParaGranularity + 1) + 0.5 * (ADVExtraDelay – CSExtraDelay)) * GPMC_FCLK

(11) L = ((OEOnTime – CSOnTime) * (TimeParaGranularity + 1) + 0.5 * (OEExtraDelay – CSExtraDelay)) * GPMC_FCLK

(12) **For single read:** N = RdCycleTime * (TimeParaGranularity + 1) * GPMC_FCLK
For single write: N = WrCycleTime * (TimeParaGranularity + 1) * GPMC_FCLK
For burst read: N = (RdCycleTime + (n – 1) * PageBurstAccessTime) * (TimeParaGranularity + 1) * GPMC_FCLK
For burst write: N = (WrCycleTime + (n – 1) * PageBurstAccessTime) * (TimeParaGranularity + 1) * GPMC_FCLK

(13) In gpmc_ncsx, x is equal to 0, 1, 2, 3, 4, 5, 6, or 7.

(14) M = ((RdCycleTime - CSOnTime) * (TimeParaGranularity + 1) - 0.5 * CSExtraDelay) * GPMC_FCLK
Above M parameter expression is given as one example of GPMC programming. IO DIR signal will go from IN to OUT after both RdCycleTime and BusTurnAround completion. Behavior of IO direction signal does depend on kind of successive Read/Write accesses performed to Memory and multiplexed or non-multiplexed memory addressing scheme, bus keeping feature enabled or not. IO DIR behavior is automatically handled by GPMC controller.

Copyright © 2009–2014, Texas Instruments Incorporated

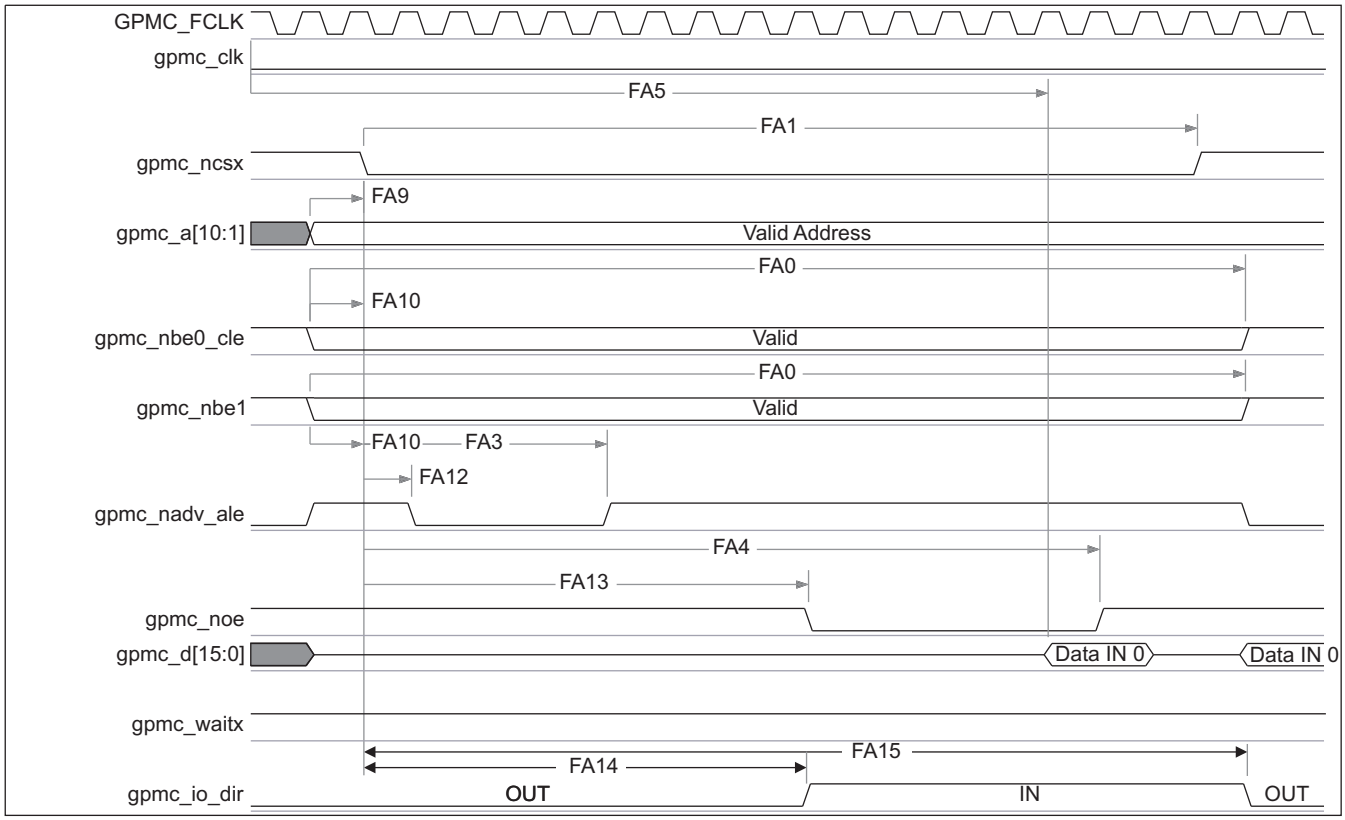

Figure 6-7. GPMC/NOR Flash – Asynchronous Read – Single Word Timing(1) (2) (3)

(1) In gpmc_ncsx, x is equal to 0, 1, 2, 3, 4, 5, 6, or 7. In gpmc_waitx, x is equal to 0, 1, 2, or 3.

(2) FA5 parameter provides amount of time required to internally sample input data. It is expressed in number of GPMC functional clock cycles. From start of read cycle and after FA5 functional clock cycles, input data is internally sampled by active functional clock edge. FA5 value must be stored inside AccessTime register bit field.

(3) GPMC_FCLK is an internal clock (GPMC functional clock) not provided externally.

Copyright © 2009–2014, Texas Instruments Incorporated

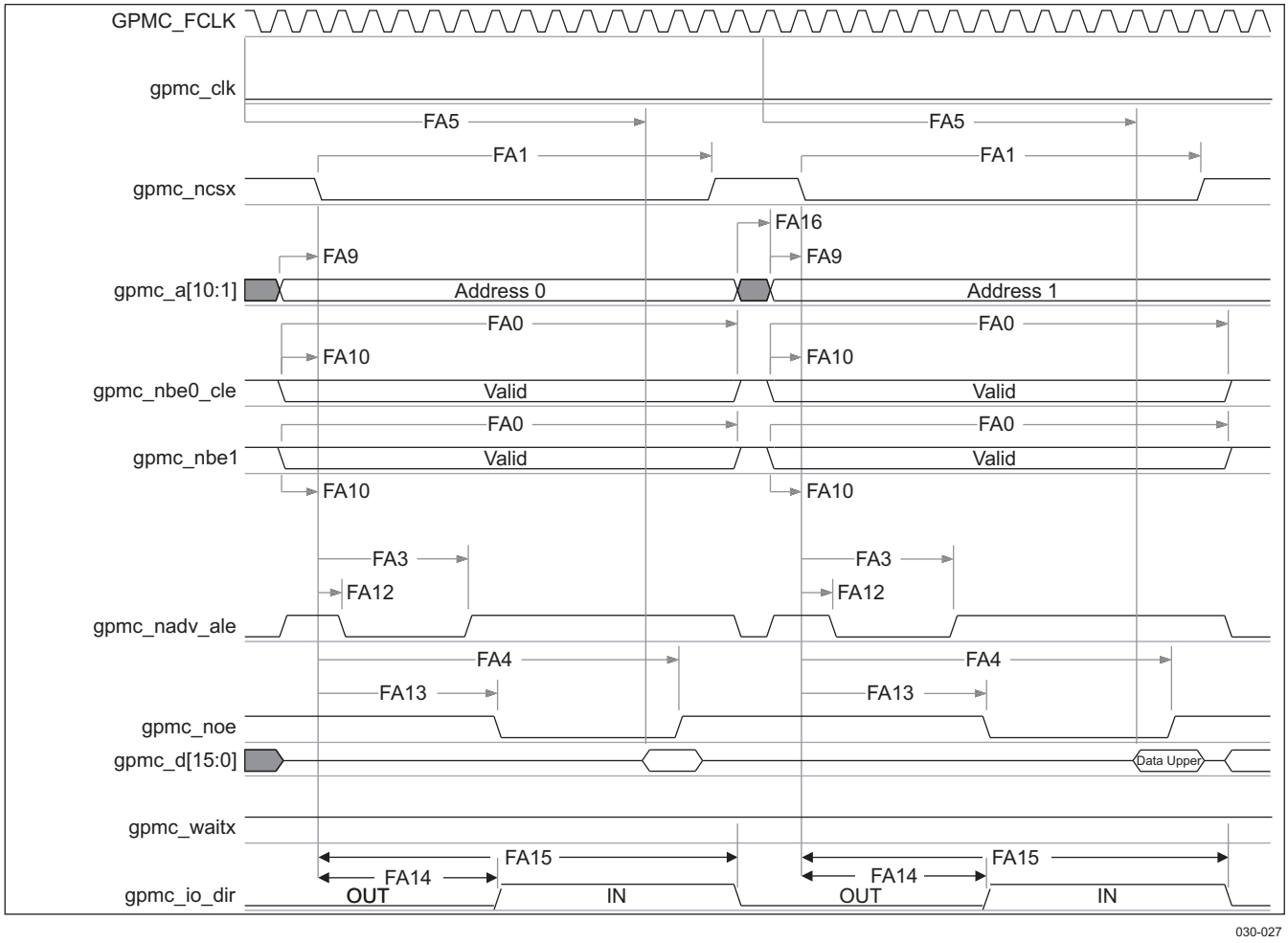

Figure 6-8. GPMC/NOR Flash – Asynchronous Read – 32-bit Timing(1) (2) (3)

(1) In gpmc_ncsx, x is equal to 0, 1, 2, 3, 4, 5, 6, or 7. In gpmc_waitx, x is equal to 0, 1, 2, or 3.

(2) FA5 parameter provides amount of time required to internally sample input data. It is expressed in number of GPMC functional clock cycles. From start of read cycle and after FA5 functional clock cycles, input data is internally sampled by active functional clock edge. FA5 value must be stored inside AccessTime register bit field.

(3) GPMC_FCLK is an internal clock (GPMC functional clock) not provided externally.

Copyright © 2009–2014, Texas Instruments Incorporated

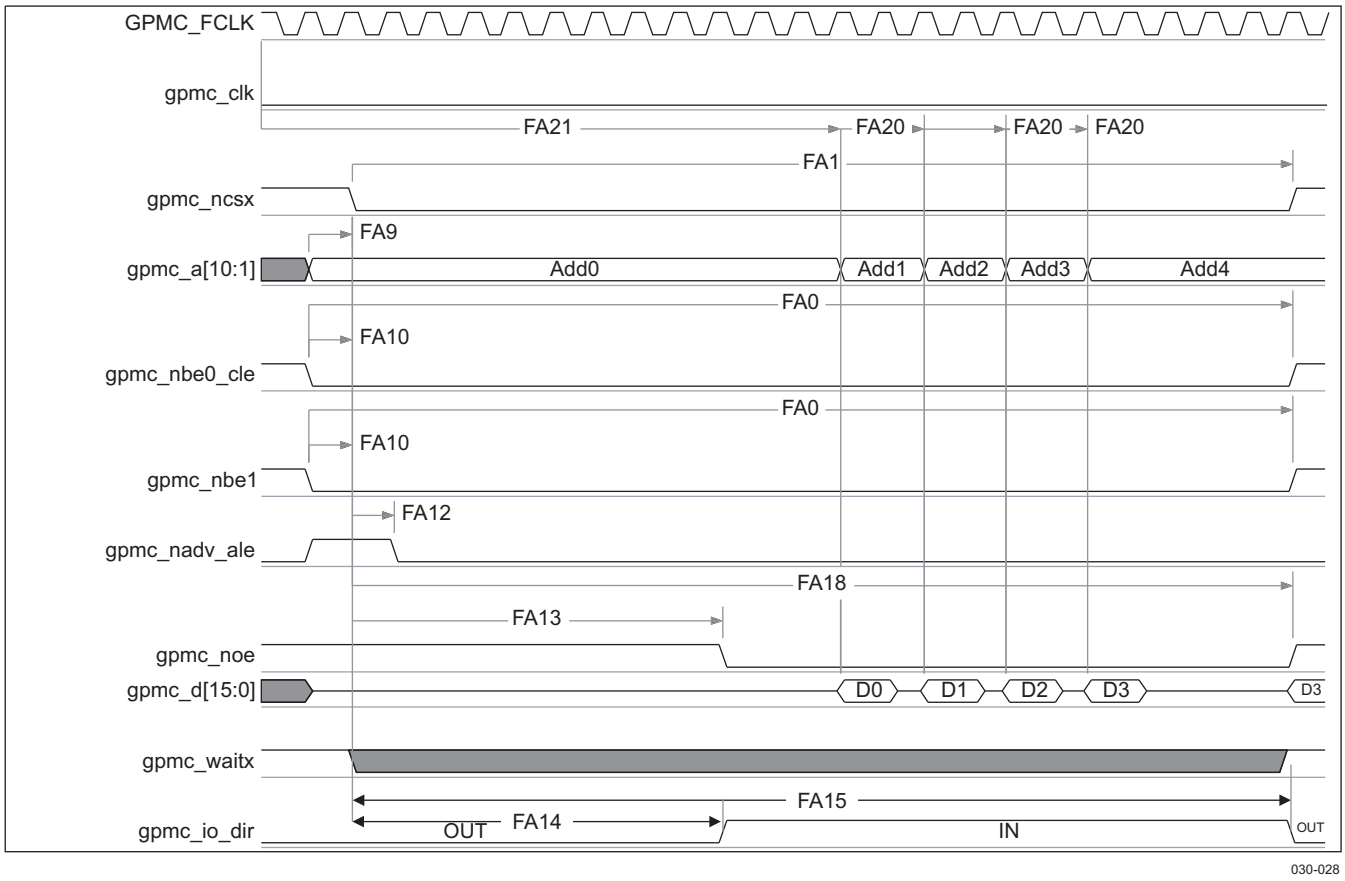

Figure 6-9. GPMC/NOR Flash – Asynchronous Read – Page Mode 4x16-bit Timing(1) (2) (3) (4)

(1) In gpmc_ncsx, x is equal to 0, 1, 2, 3, 4, 5, 6, or 7. In gpmc_waitx, x is equal to 0, 1, 2, or 3.

(2) FA21 parameter provides amount of time required to internally sample first input page data. It is expressed in number of GPMC functional clock cycles. From start of read cycle and after FA21 functional clock cycles, first input page data is internally sampled by active functional clock edge. FA21 value must be stored inside AccessTime register bit field.

(3) FA20 parameter provides amount of time required to internally sample successive input page data. It is expressed in number of GPMC functional clock cycles. After each access to input page data, next input page data is internally sampled by active functional clock edge after FA20 functional clock cycles. FA20 is also the duration of address phases for successive input page data (excluding first input page data). FA20 value must be stored in PageBurstAccessTime register bit field.

(4) GPMC_FCLK is an internal clock (GPMC functional clock) not provided externally.

Copyright © 2009–2014, Texas Instruments Incorporated

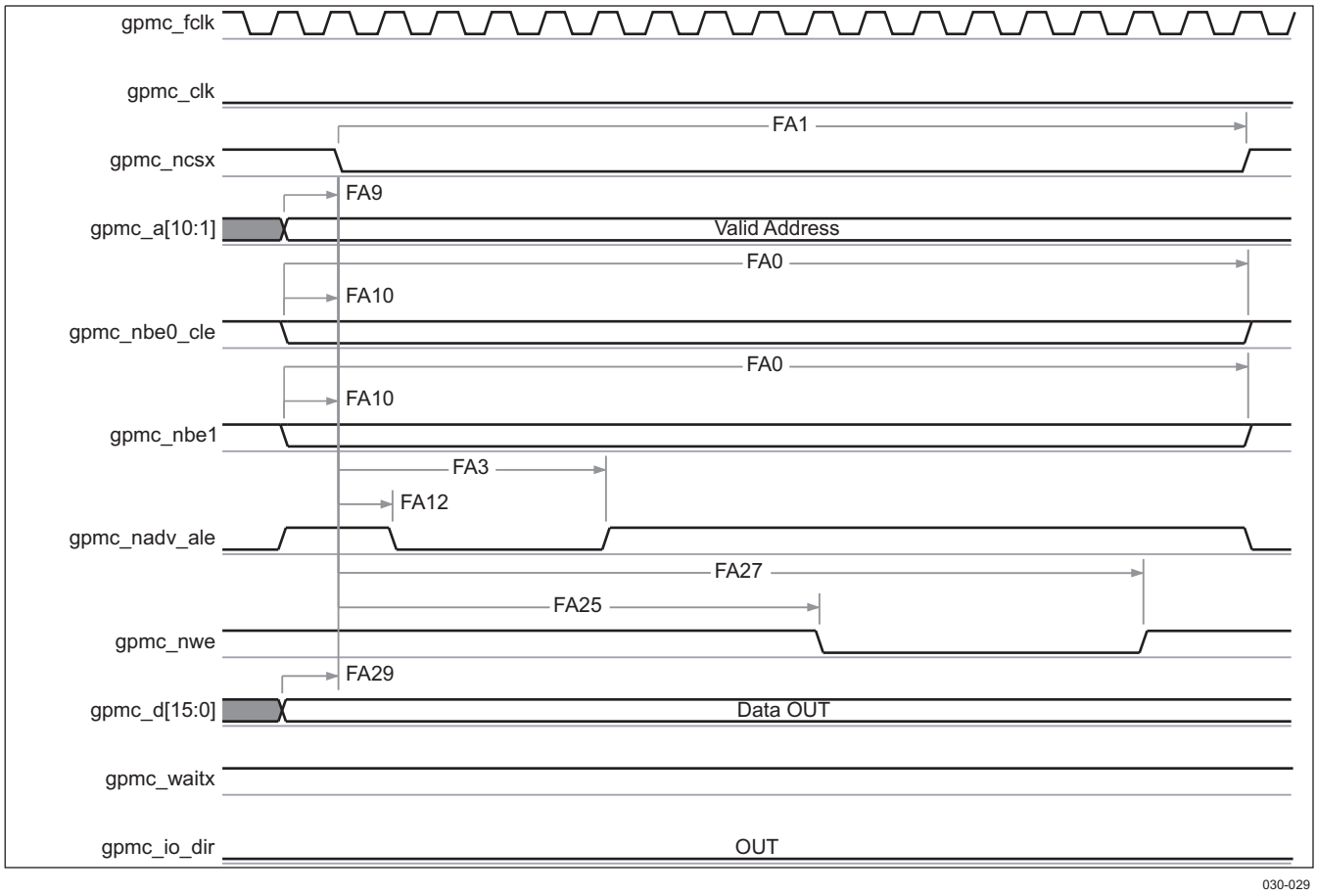

In gpmc_ncsx, x is equal to 0, 1, 2, 3, 4, 5, 6, or 7. In gpmc_waitx, x is equal to 0, 1, 2, or 3.

Figure 6-10. GPMC/NOR Flash – Asynchronous Write – Single Word Timing

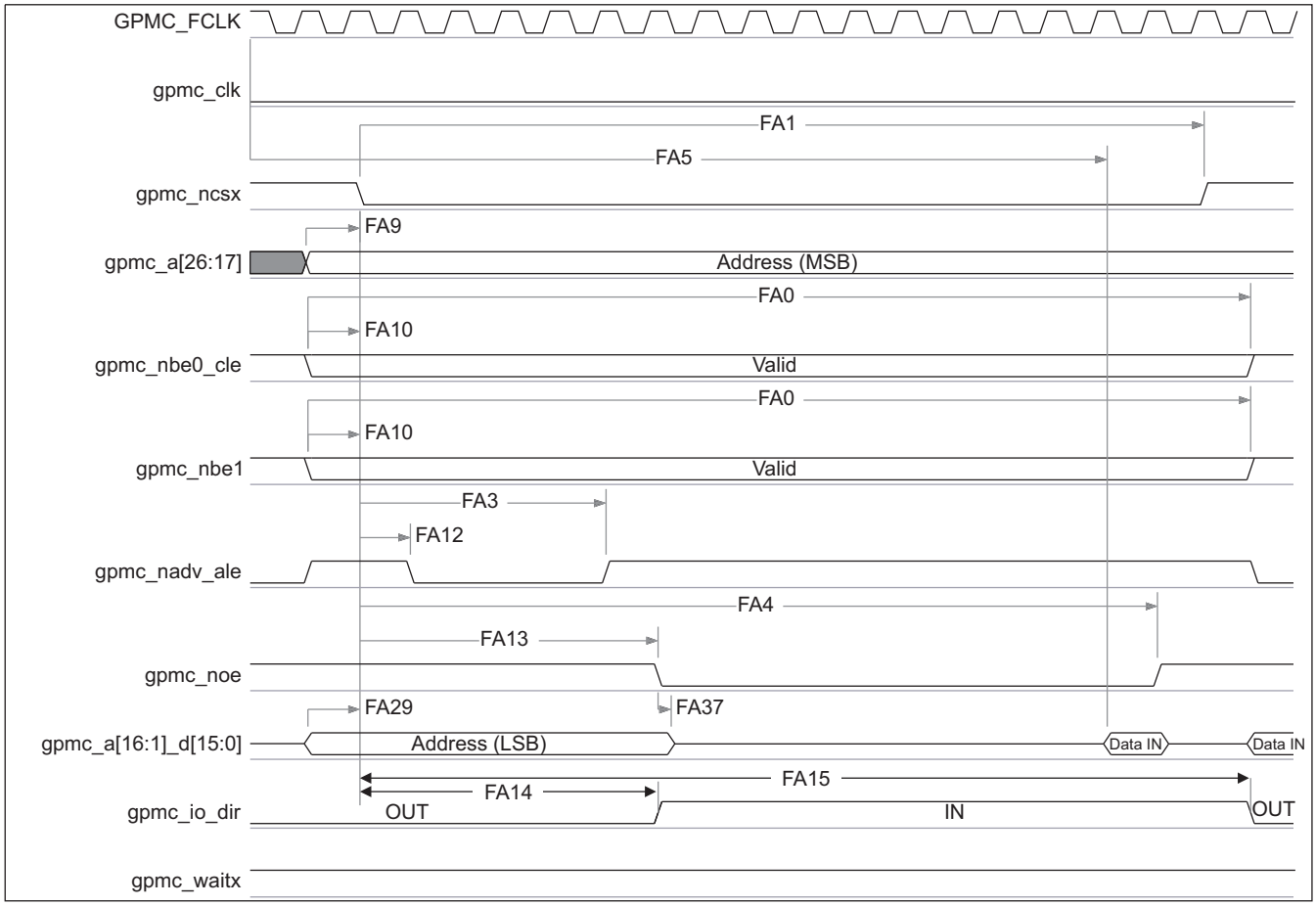

Figure 6-11. GPMC/Multiplexed NOR Flash – Asynchronous Read – Single Word Timing(1) (2) (3)

(1) In gpmc_ncsx, x is equal to 0, 1, 2, 3, 4, 5, 6, or 7. In gpmc_waitx, x is equal to 0, 1, 2, or 3.

(2) FA5 parameter provides amount of time required to internally sample input data. It is expressed in number of GPMC functional clock cycles. From start of read cycle and after FA5 functional clock cycles, input data is internally sampled by active functional clock edge. FA5 value must be stored inside AccessTime register bit field.

(3) GPMC_FCLK is an internal clock (GPMC functional clock) not provided externally.

Copyright © 2009–2014, Texas Instruments Incorporated

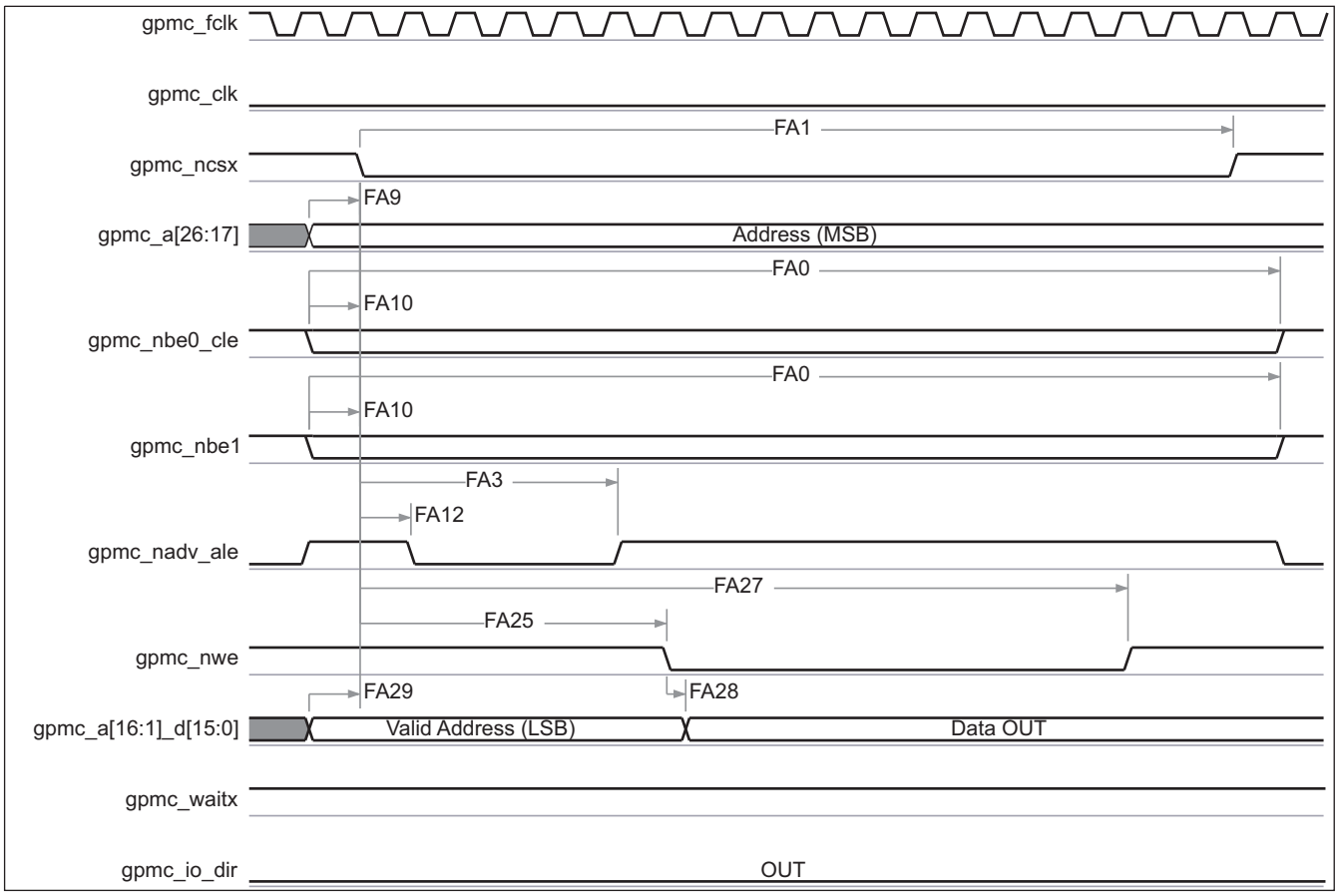

In gpmc_ncsx, x is equal to 0, 1, 2, 3, 4, 5, 6, or 7. In gpmc_waitx, x is equal to 0, 1, 2, or 3.

Figure 6-12. GPMC/Multiplexed NOR Flash – Asynchronous Write – Single Word Timing

6.4.1.3 GPMC/NAND Flash Interface Timing

Table 6-9 through Table 6-12 assume testing over the recommended operating conditions and electrical characteristic conditions.

Table 6-9. GPMC/NAND Flash Asynchronous Mode Timing Conditions

TIMING CONDITION PARAMETER		1.8V, 3.3V		UNIT
		MIN	MAX	
Input Conditions				
t_R	Input signal rise time		1.8	ns
t_F	Input signal fall time		1.8	ns
C_{LOAD}	Output load capacitance	30		pF

Table 6-10. GPMC/NAND Flash Interface Asynchronous Timing Internal Parameters(1) (2)

NO.	PARAMETER	1.8V, 3.3V		UNIT
		MIN	MAX	
GNFI1	Maximum output data generation delay from internal functional clock		6.5	ns
GNFI2	Maximum input data capture delay by internal functional clock		4	ns
GNFI3	Maximum device select generation delay from internal functional clock		6.5	ns
GNFI4	Maximum address latch enable generation delay from internal functional clock		6.5	ns
GNFI5	Maximum command latch enable generation delay from internal functional clock		6.5	ns
GNFI6	Maximum output enable generation delay from internal functional clock		6.5	ns
GNFI7	Maximum write enable generation delay from internal functional clock		6.5	ns
GNFI8	Maximum functional clock skew		100	ps

(1) Internal parameters table must be used to calculate data access time stored in the corresponding CS register bit field.
(2) Internal parameters are referred to the GPMC functional internal clock which is not provided externally.

Table 6-11. GPMC/NAND Flash Interface Timing Requirements

NO.	PARAMETER		1.8V, 3.3V		UNIT
			MIN	MAX	
GNF12(1)	$t_{acc(DAT)}$	Data maximum access time		J(2)	GPMC_FCLK cycles

(1) The GNF12 parameter provides the amount of time required to internally sample input data. It is expressed in number of GPMC functional clock cycles. From start of the read cycle and after GNF12 functional clock cycles, input data is internally sampled by the active functional clock edge. The GNF12 value must be stored inside AccessTime register bit field.
(2) J = AccessTime * (TimeParaGranularity + 1)

Table 6-12. GPMC/NAND Flash Interface Switching Characteristics

NO.	PARAMETER		1.8V, 3.3V		UNIT
			MIN	MAX	
	$t_{R(DO)}$	Rise time, output data		2.0	ns
	$t_{F(DO)}$	Fall time, output data		2.0	ns
GNF0	$t_{w(nWEV)}$	Pulse duration, gpmc_nwe valid time	A(1)		ns
GNF1	$t_{d(nCSV-nWEV)}$	Delay time, gpmc_ncsx(13) valid to gpmc_nwe valid	B(2) - 0.2	B(2) + 2.0	ns
GNF2	$t_{w(CLEH-nWEV)}$	Delay time, gpmc_nbe0_cle high to gpmc_nwe valid	C(3) - 0.2	C(3) + 2.0	ns
GNF3	$t_{w(nWEV-DV)}$	Delay time, gpmc_d[15:0] valid to gpmc_nwe valid	D(4) - 0.2	D(4) + 2.0	ns
GNF4	$t_{w(nWEIV-DIV)}$	Delay time, gpmc_nwe invalid to gpmc_d[15:0] invalid	E(5) - 0.2	E(5) + 2.0	ns
GNF5	$t_{w(nWEIV-CLEIV)}$	Delay time, gpmc_nwe invalid to gpmc_nbe0_cle invalid	F(6) - 0.2	F(6) + 2.0	ns
GNF6	$t_{w(nWEIV-nCSIV)}$	Delay time, gpmc_nwe invalid to gpmc_ncsx(13) invalid	G(7) - 0.2	G(7) + 2.0	ns
GNF7	$t_{w(ALEH-nWEV)}$	Delay time, gpmc_nadv_ale High to gpmc_nwe valid	C(3) - 0.2	C(3) + 2.0	ns
GNF8	$t_{w(nWEIV-ALEIV)}$	Delay time, gpmc_nwe invalid to gpmc_nadv_ale invalid	F(6) - 0.2	F(6) + 2.0	ns
GNF9	$t_{c(nWE)}$	Cycle time, Write cycle time	H(8)		ns
GNF10	$t_{d(nCSV-nOEV)}$	Delay time, gpmc_ncsx(13) valid to gpmc_noe valid	I(9) - 0.2	I(9) + 2.0	ns
GNF13	$t_{w(nOEV)}$	Pulse duration, gpmc_noe valid time	K(10)		ns
GN F14	$t_{c(nOE)}$	Cycle time, Read cycle time	L(11)		ns

Copyright © 2009–2014, Texas Instruments Incorporated

Table 6-12. GPMC/NAND Flash Interface Switching Characteristics (continued)

NO.	PARAMETER		1.8V, 3.3V		UNIT
			MIN	MAX	
GNF15	$t_{w(nOEIV-nCSIV)}$	Delay time, gpmc_noe invalid to gpmc_ncsx(13) invalid	M(12) - 0.2	M(12) + 2.0	ns

(1) A = (WEOffTime – WEOnTime) * (TimeParaGranularity + 1) * GPMC_FCLK

(2) B = ((WEOnTime – CSOnTime) * (TimeParaGranularity + 1) + 0.5 * (WEExtraDelay – CSExtraDelay)) * GPMC_FCLK

(3) C = ((WEOnTime – ADVOnTime) * (TimeParaGranularity + 1) + 0.5 * (WEExtraDelay – ADVExtraDelay)) * GPMC_FCLK

(4) D = (WEOnTime * (TimeParaGranularity + 1) + 0.5 * WEExtraDelay) * GPMC_FCLK

(5) E = (WrCycleTime – WEOffTime * (TimeParaGranularity + 1) – 0.5 * WEExtraDelay) * GPMC_FCLK

(6) F = (ADVWrOffTime – WEOffTime * (TimeParaGranularity + 1) + 0.5 * (ADVExtraDelay – WEExtraDelay) * GPMC_FCLK

(7) G = (CSWrOffTime – WEOffTime * (TimeParaGranularity + 1) + 0.5 * (CSExtraDelay – WEExtraDelay) * GPMC_FCLK

(8) H = WrCycleTime * (1 + TimeParaGranularity) * GPMC_FCLK

(9) I = ((OEOnTime – CSOnTime) * (TimeParaGranularity + 1) + 0.5 * (OEExtraDelay – CSExtraDelay)) * GPMC_FCLK

(10) K = (OEOffTime – OEOnTime) * (1 + TimeParaGranularity) * GPMC_FCLK

(11) L = RdCycleTime * (1 + TimeParaGranularity) * GPMC_FCLK

(12) M = (CSRdOffTime – OEOffTime * (TimeParaGranularity + 1) + 0.5 * (CSExtraDelay – OEExtraDelay) * GPMC_FCLK

(13) In gpmc_ncsx, x is equal to 0, 1, 2, 3, 4, 5, 6, or 7.

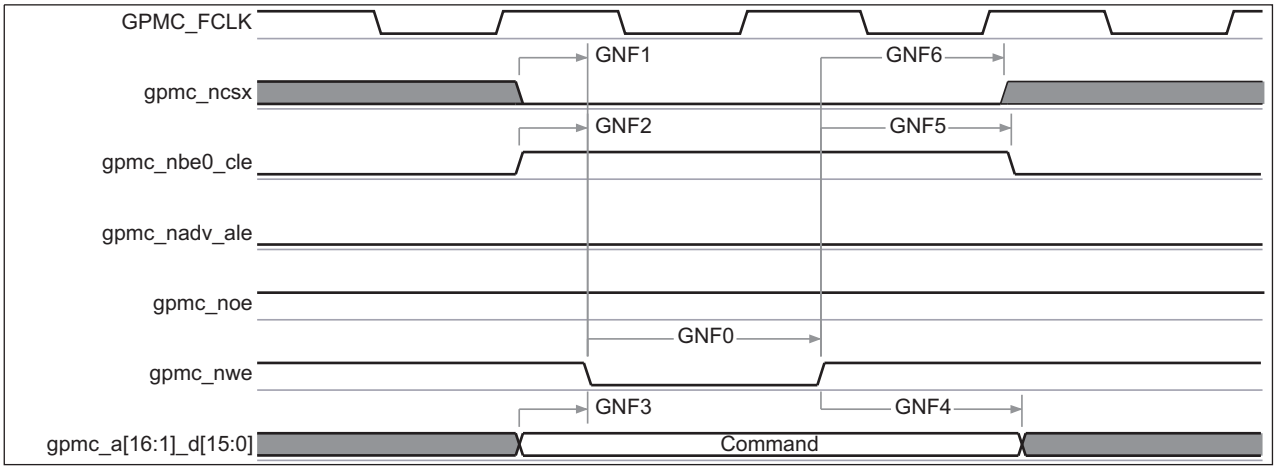

In gpmc_ncsx, x is equal to 0, 1, 2, 3, 4, 5, 6, or 7.

Figure 6-13. GPMC/NAND Flash – Command Latch Cycle Timing

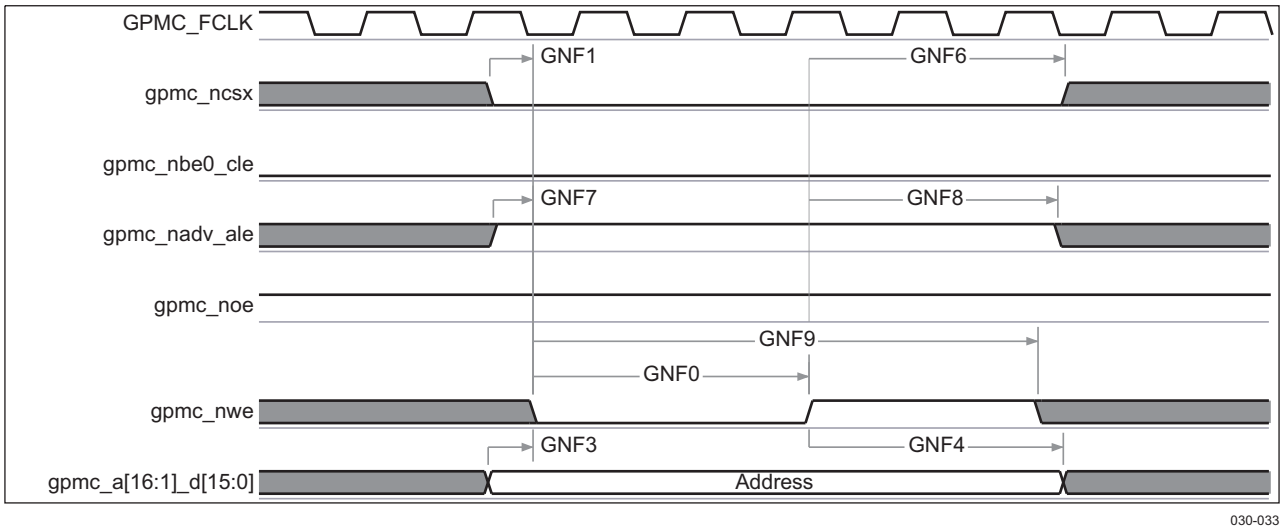

In gpmc_ncsx, x is equal to 0, 1, 2, 3, 4, 5, 6, or 7.

Figure 6-14. GPMC/NAND Flash – Address Latch Cycle Timing

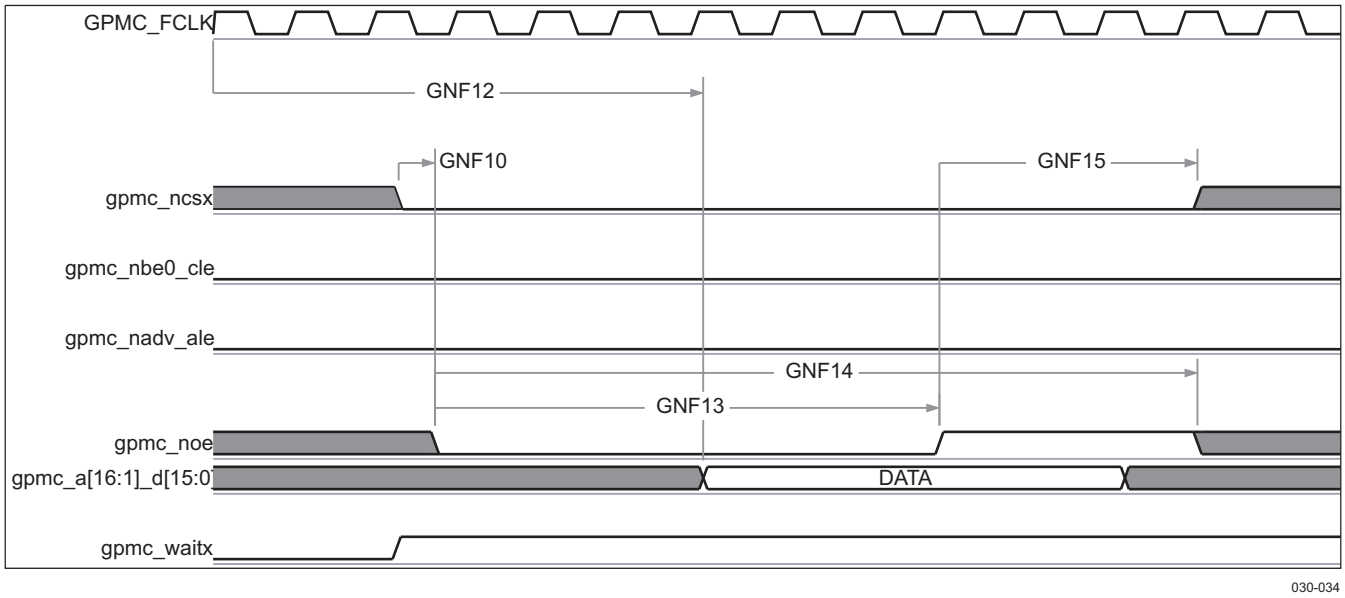

Figure 6-15. GPMC/NAND Flash – Data Read Cycle Timing(1) (2) (3)

(1) The GNF12 parameter provides amount of time required to internally sample input data. It is expressed in number of GPMC functional clock cycles. From start of read cycle and after GNF12 functional clock cycles, input data is internally sampled by active functional clock edge. The GNF12 value must be stored inside AccessTime register bit field.

(2) GPMC_FCLK is an internal clock (GPMC functional clock) not provided externally.

(3) In gpmc_ncsx, x is equal to 0, 1, 2, 3, 4, 5, 6, or 7. In gpmc_waitx, x is equal to 0 ,1, 2, or 3.

Copyright © 2009–2014, Texas Instruments Incorporated

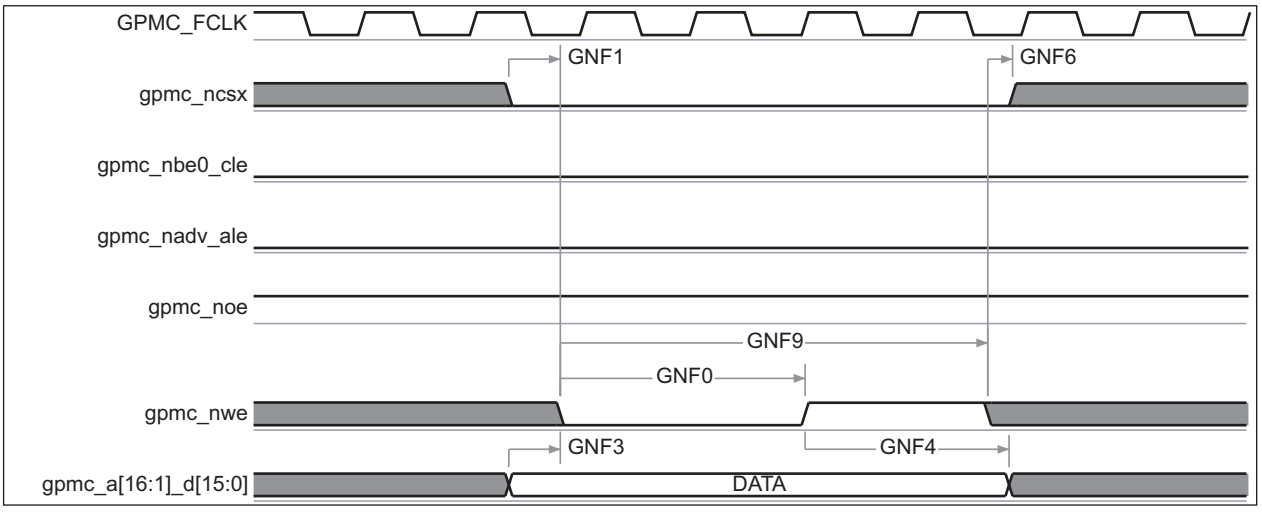

In gpmc_ncsx, x is equal to 0, 1, 2, 3, 4, 5, 6, or 7. In gpmc_waitx, x is equal to 0 or 1.

Figure 6-16. GPMC/NAND Flash – Data Write Cycle Timing

6.4.2 SDRAM Controller (SDRC)

The SDRC is a dedicated interface to DDR2/LPDDR1 SDRAM that performs the following functions:

- Buffering of input image data from sensors or video sources
- Intermediate buffering for processing/resizing of image data in the VPFE
- Numerous OSD display buffers
- Intermediate buffering for large raw Bayer data image files while performing image processing functions
- Buffering for intermediate data while performing video encode and decode functions
- Storage of executable code for the ARM

The main features of the controller are:

- Open Core Protocol 2.2 (OCP) compliant [7].
- Supports JEDEC standard compliant DDR2 [2] and LPDDR1 [4] devices.
  - SDRAM address range over 2 chip selects.
  - Supports following data bus widths:

OCP Data Bus Width	SDRAM Data Bus Width
64 and 128-Bit	16, 32, and 64-Bit

  - Supports following CAS latencies:

SDRAM Type	CAS Latencies
DDR2	2, 3, 4, 5, and 6
LPDDR1	2 and 3

  - Supports following number of internal banks:

SDRAM Type	Internal Banks
DDR2	1, 2, 4, and 8
LPDDR1	1, 2, and 4

  - Supports 256, 512, 1024, and 2048-word page sizes.
  - Supports following burst lengths:

SDRAM Type	Burst Length
DDR2	8 (4 not supported)
LPDDR1	8 (2 and 4 not supported)

  - Supports sequential burst type.
  - SDRAM auto initialization from reset or configuration change.
  - Supports Bank Interleaving across both the chip selects.
  - Supports Clock Stop mode for LPDDR1 for low power.
  - Supports Self Refresh and Precharge Power-Down modes for low power.
  - Supports Partial Array Self Refresh and Temperature Controlled Self Refresh modes for low power in LPDDR1.
  - Temperature Controlled Self Refresh is only supported for mobile SDRAM having on-chip temperature sensor.
  - Supports ODT on DDR2.
  - Supports prioritized refresh.
  - Programmable SDRAM refresh rate and backlog counter.
  - Programmable SDRAM timing parameters.
  - Supports only little endian.

Copyright © 2009–2014, Texas Instruments Incorporated

6.4.2.1 LPDDR Interface

This section provides the timing specification for the LPDDR interface as a PCB design and manufacturing specification. The design rules constrain PCB trace length, PCB trace skew, signal integrity, cross-talk, and signal timing. These rules, when followed, result in a reliable LPDDR memory system without the need for a complex timing closure process. For more information regarding guidelines for using this LPDDR specification, see the *Understanding TI's PCB Routing Rule-Based DDR Timing Specification* Application Report (SPRAAV0).

6.4.2.1.1 LPDDR Interface Schematic

Figure 6-17 and Figure 6-18 show the LPDDR interface schematics for a LPDDR memory system. The 1 x16 LPDDR system schematic is identical to Figure 6-17 except that the high word LPDDR device is deleted.

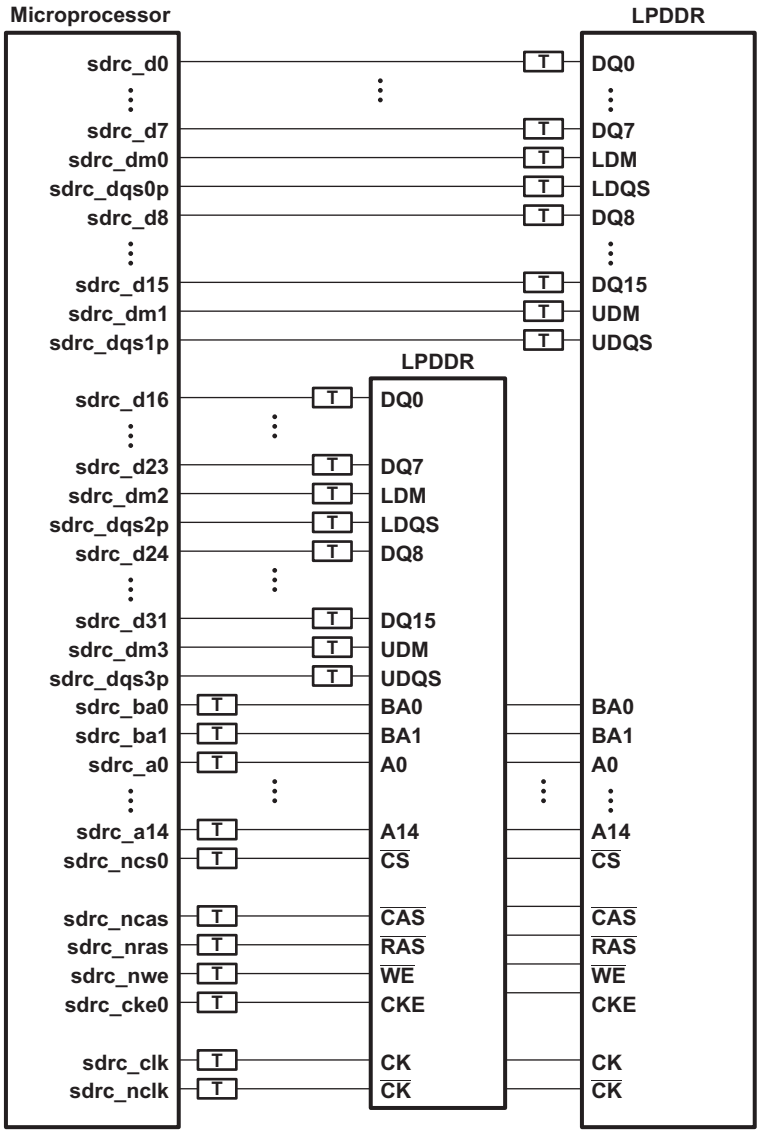

Figure 6-17. AM3517/05 LPDDR High Level Schematic (x16 memories)

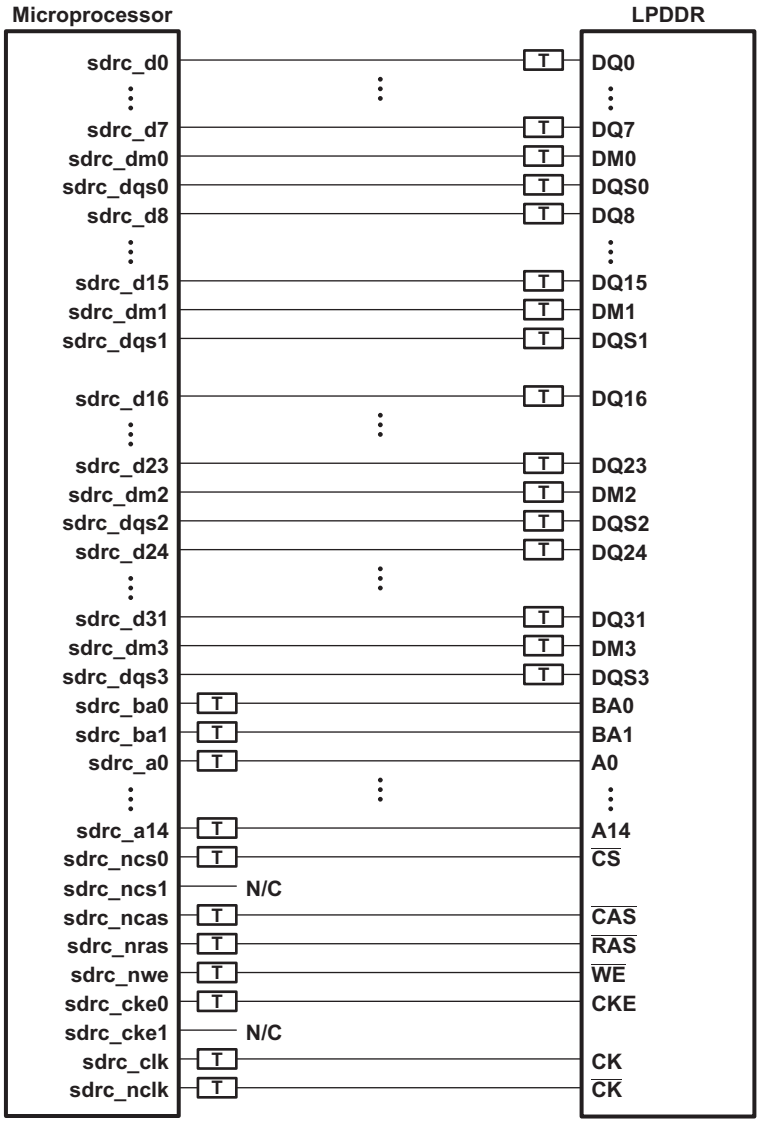

Figure 6-18. AM3517/05 LPDDR High Level Schematic (x32 memory)

6.4.2.1.2 Compatible JEDEC LPDDR Devices

Table 6-13 lists the parameters of the JEDEC LPDDR devices that are compatible with this interface. Generally, the LPDDR interface is compatible with x16 and x32 LPDDR333 speed grade LPDDR devices.

Table 6-13. Compatible JEDEC LPDDR Devices

NO.	PARAMETER	MIN	MAX	UNIT	NOTES
1	JEDEC LPDDR Device Speed Grade	LPDDR333			See Note (1)
2	JEDEC LPDDR Device Bit Width	16	32	Bits	
3	JEDEC LPDDR Device Count	1	2	Devices	See Note (2)
4	JEDEC LPDDR Device Ball Count	60	90	Balls	

(1) Higher LPDDR speed grades operating at the specified speeds are supported due to inherent JEDEC LPDDR backwards compatibility.
(2) 1 x16 LPDDR device is used for 16 bit LPDDR memory system. 1x32 or 2x16 LPDDR devices are used for a 32-bit LPDDR memory system.

Copyright © 2009–2014, Texas Instruments Incorporated

6.4.2.1.3 PCB Stackup

The minimum stackup required for routing the microprocessor is a six layer stack as listed in Table 6-14. Additional layers may be added to the PCB stack up to accommodate other circuity or to reduce the size of the PCB footprint.

Table 6-14. Minimum PCB Stack Up

LAYER	TYPE	DESCRIPTION
1	Signal	Top Routing Mostly Horizontal
2	Plane	Ground
3	Plane	Power
4	Signal	Internal Routing
5	Plane	Ground
6	Signal	Bottom Routing Mostly Vertical

Table 6-15. PCB Stack Up Specifications

NO.	PARAMETER	MIN	TYP	MAX	UNIT	NOTES
1	PCB Routing/Plane Layers	6				
2	Signal Routing Layers	3				
3	Full ground layers under LPDDR routing region	2				
4	Number of ground plane cuts allowed within LPDDR routing region			0		
5	Number of ground reference planes required for each LPDDR routing 1 layer	1				
6	Number of layers between LPDDR routing layer and reference ground 0 plane			0		
7	PCB Routing Feature Size		4		Mils	
8	PCB Trace Width w		4		Mils	
9	PCB BGA escape via pad size		18		Mils	
10	PCB BGA escape via hole size		8		Mils	
11	Device BGA Pad Size					See Note(1)
12	LPDDR Device BGA Pad Size					See Note(2)
13	Single Ended Impedance, ZO	50		75	Ω	
14	Impedance Control	Z-5	Z	Z + 5	Ω	See Note(3)

(1) Please see the *Flip Chip Ball Grid Array Package* Reference Guide (SPRU811) for device BGA pad size.
(2) Please see the LPDDR device manufacturer documentation for the LPDDR device BGA pad size.
(3) Z is the nominal singled ended impedance selected for the PCB specified by item 12.

6.4.2.1.4 Placement

Figure 6-19 shows the required placement for the microprocessor as well as the LPDDR devices. The dimensions for Figure 6-19 are defined in Table 6-16. The placement does not restrict the side of the PCB that the devices are mounted on. The ultimate purpose of the placement is to limit the maximum trace lengths and allow for proper routing space. For 1x16 and 1x32 LPDDR memory systems, the second LPDDR device is omitted from the placement.

Copyright © 2009–2014, Texas Instruments Incorporated

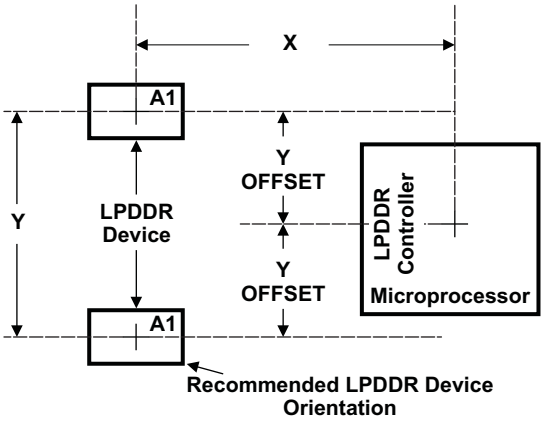

Figure 6-19. AM3517/05 and LPDDR Device Placement

Table 6-16. Placement Specifications

NO.	PARAMETER	MIN	MAX	UNIT	NOTES
1	X		1440	Mils	See Notes(1), (2)
2	Y		1030	Mils	See Notes(1), (2)
3	Y Offset		525	Mils	See Notes(1),(2),(3)
4	LPDDR Keepout Region				See Note(4)
5	Clearance from non-LPDDR signal to LPDDR Keepout Region	4		w	See Note(5)

(1) See Figure 6-19 for dimension definitions.
(2) Measurements from center of device to center of LPDDR device.
(3) For 16 bit memory systems it is recommended that Y Offset be as small as possible.
(4) LPDDR keepout region to encompass entire LPDDR routing area.
(5) Non-LPDDR signals allowed within LPDDR keepout region provided they are separated from LPDDR routing layers by a ground plane.

6.4.2.1.5 LPDDR Keep Out Region

The region of the PCB used for the LPDDR circuitry must be isolated from other signals. The LPDDR keep out region is defined for this purpose and is shown in Figure 6-20. The size of this region varies with the placement and LPDDR routing. Additional clearances required for the keep out region are listed in Table 6-16.

Copyright © 2009–2014, Texas Instruments Incorporated

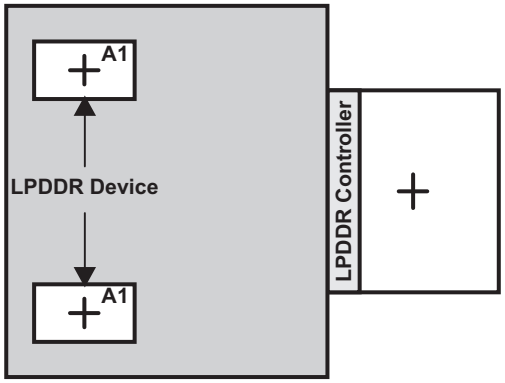

Region should encompass all LPDDR circuitry and varies depending on placement. Non-LPDDR signals should not be routed on the LPDDR signal layers within the LPDDR keep out region. Non-LPDDR signals may be routed in the region provided they are routed on layers separated from LPDDR signal layers by a ground layer. No breaks should be allowed in the reference ground layers in this region. In addition, the 1.8 V power plane should cover the entire keep out region.

Figure 6-20. LPDDR Keepout Region

6.4.2.1.6 Net Classes

Table 6-17 lists the clock net classes for the LPDDR interface. Table 6-18 lists the signal net classes, and associated clock net classes, for the signals in the LPDDR interface. These net classes are used for the termination and routing rules that follow.

Table 6-17. Clock Net Class Definitions

CLOCK NET CLASS	PIN NAMES
CK	sdrc_clk/sdrc_nclk
DQS0	sdrc_dqs0
DQS1	sdrc_dqs1
DQS2	sdrc_dqs2
DQS3	sdrc_dqs3

Table 6-18. Signal Net Class Definitions

CLOCK NET CLASS	ASSOCIATED CLOCK NET CLASS	PIN NAMES
ADDR_CTRL	CK	sdrc_ba, sdrc_a, sdrc_ncs0, sdrc_ncas, sdrc_nras, sdrc_nwe, sdrc_cke0
DQ0	DQS0	sdrc_d, sdrc_dm0
DQ1	DQS1	sdrc_d, sdrc_dm1
DQ2	DQS2	sdrc_d, sdrc_dm2
DQ3	DQS3	sdrc_d, sdrc_dm3

6.4.2.1.7 LPDDR Signal Termination

No terminations of any kind are required in order to meet signal integrity and overshoot requirements. Serial terminators are permitted, if desired, to reduce EMI risk; however, serial terminations are the only type permitted. Table 6-19 lists the specifications for the series terminators.

Copyright © 2009–2014, Texas Instruments Incorporated

Table 6-19. LPDDR Signal Terminations

NO.	PARAMETER	MIN	TYP	MAX	UNIT	NOTES
1	CK Net Class	0		10	Ω	See Note (1)
2	ADDR_CTRL Net Class	0	22	Zo	Ω	See Notes (1), (2), (3)
3	Data Byte Net Classes (DQS0-DQS3, DQ0-DQ3)	0	22	Zo	Ω	See Notes (1), (2), (3)

(1) Only series termination is permitted, parallel or SST specifically disallowed.
(2) Terminator values larger than typical only recommended to address EMI issues.
(3) Termination value should be uniform across net class.

6.4.2.1.8 LPDDR CK and ADDR_CTRL Routing

Figure 6-21 shows the topology of the routing for the CK and ADDR_CTRL net classes. The route is a balanced T as it is intended that the length of segments B and C be equal. In addition, the length of A should be maximized.

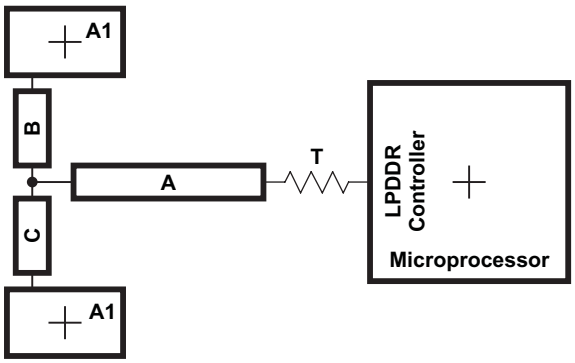

Figure 6-21. CK and ADDR_CTRL Routing and Topology

Table 6-20. CK and ADDR_CTRL Routing Specification

NO.	PARAMETER	MIN	TYP	MAX	UNIT	NOTES
1	Center to Center CK-CK spacing			2w		
2	CK A to B/A to C Skew Length Mismatch			25	Mils	See Note (1)
3	CK B to C Skew Length Mismatch			25	Mils	
4	Center to Center CK to other LPDDR trace spacing	4w				See Note (2)
5	CK/ADDR_CTRL nominal trace length	CACLM-50	CACLM	CACLM+50	Mils	See Note (3)
6	ADDR_CTRL to CK Skew Length Mismatch			100	Mils	
7	ADDR_CTRL to ADDR_CTRL Skew Length Mismatch			100	Mils	
8	Center to Center ADDR_CTRL to other LPDDR trace 4w spacing	4w				See Note (2)
9	Center to Center ADDR_CTRL to other ADDR_CTRL 3w trace spacing	3w				See Note (2)
10	ADDR_CTRL A to B/A to C Skew Length Mismatch			100	Mils	See Note (1)
11	ADDR_CTRL B to C Skew Length Mismatch			100	Mils	

(1) Series terminator, if used, should be located closest to device.
(2) Center to center spacing is allowed to fall to minimum (w) for up to 500 mils of routed length to accommodate BGA escape and routing congestion.
(3) CACLM is the longest Manhattan distance of the CK and ADDR_CTRL net classes.

Copyright © 2009–2014, Texas Instruments Incorporated

Figure 6-22 shows the topology and routing for the DQS and DQ net classes; the routes are point to point. Skew matching across bytes is not needed nor recommended.

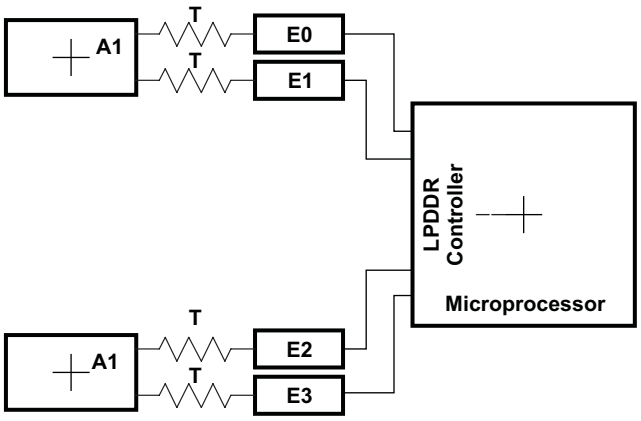

Figure 6-22. DQS and DQ Routing and Topology

Table 6-21. DQS and DQ Routing Specification(1)

NO.	PARAMETER	MIN	TYP	MAX	UNIT	NOTES
2	DQS E Skew Length Mismatch			25	Mils	
3	Center to Center DQS to other LPDDR trace spacing	4w				See Note(2)
4	DQS/DQ nominal trace length	DQLM - 50	DQLM	DQLM + 50	Mils	See Note(3)
5	DQ to DQS Skew Length Mismatch			100	Mils	
6	DQ to DQ Skew Length Mismatch			100	Mils	
7	Center to Center DQ to other LPDDR trace spacing	4w				See Note(2)
8	Center to Center DQ to other DQ trace spacing	3w				See Note(2),(4)
9	DQ E Skew Length Mismatch			100	Mils	

(1) Series terminator, if used, should be located closest to LPDDR.
(2) Center to center spacing is allowed to fall to minimum (w) for up to 500 mils of routed length to accommodate BGA escape and routing congestion.
(3) Center to center spacing is allowed to fall to minimum (w) for up to 500 mils of routed length to accommodate BGA escape and routing congestion.
(4) DQLM is the longest Manhattan distance of the DQS and DQ net classes.

Copyright © 2009–2014, Texas Instruments Incorporated

6.4.2.2 DDR2 Interface

This section provides the timing specification for the DDR2 interface as a PCB design and manufacturing specification. The design rules constrain PCB trace length, PCB trace skew, signal integrity, cross-talk, and signal timing. These rules, when followed, result in a reliable DDR2 memory system without the need for a complex timing closure process. For more information regarding guidelines for using this DDR2 specification, *Understanding TI's PCB Routing Rule-Based DDR2 Timing Specification* (SPRAAV0).

6.4.2.2.1 DDR2 Interface Schematic

Figure 6-23 shows the DDR2 interface schematic for a dual-memory DDR2 system. The single-memory system is shown in Figure 6-24. Pin numbers for the AM3517/05 can be obtained from the pin description section.

6.4.2.2.2 Compatible JEDEC DDR2 Devices

Table 6-22 lists the parameters of the JEDEC DDR2 devices that are compatible with this interface. Generally, the DDR2 interface is compatible with x16 or x32 DDR2 speed grade DDR2-333 devices.

Table 6-22. Compatible JEDEC DDR2 Devices

No.	Parameter	Min	Max	Unit	Notes
1	JEDEC DDR2 Device Speed Grade	DDR2-333 MHz			See Note (1)
2	JEDEC DDR2 Device Bit Width	x16	x32	Bits	
3	JEDEC DDR2 Device Count	1	2	Devices	See Note (2)
4	JEDEC DDR2 Device Ball Count	84	92	Balls	See Note (3)

(1) Higher DDR2 speed grades operating at the specified speeds are supported due to inherent JEDEC DDR2 backwards compatibility.
(2) Device count indicates number of dies. If a package contains 2 dies, that is the maximum number of devices that can be connected.
(3) 92 ball devices retained for legacy support. New designs should use 84 ball DDR2 devices. Electrically, the 92 and 84 ball DDR2 devices are the same.

Copyright © 2009–2014, Texas Instruments Incorporated

6.4.2.2.3 PCB Stackup

The minimum stackup required for routing the AM3517/05 is a six-layer stack as listed in Table 6-23. Additional layers may be added to the PCB stack up to accommodate other circuitry or to reduce the size of the PCB footprint.

Table 6-23. Minimum PCB Stack Up

Layer	Type	Description
1	Signal	Top Routing Mostly Horizontal
2	Plane	Ground
3	Plane	Power
4	Signal	Internal Routing
5	Plane	Ground
6	Signal	Bottom Routing Mostly Vertical

Copyright © 2009–2014, Texas Instruments Incorporated

Complete stack up specifications are provided in Table 6-24.

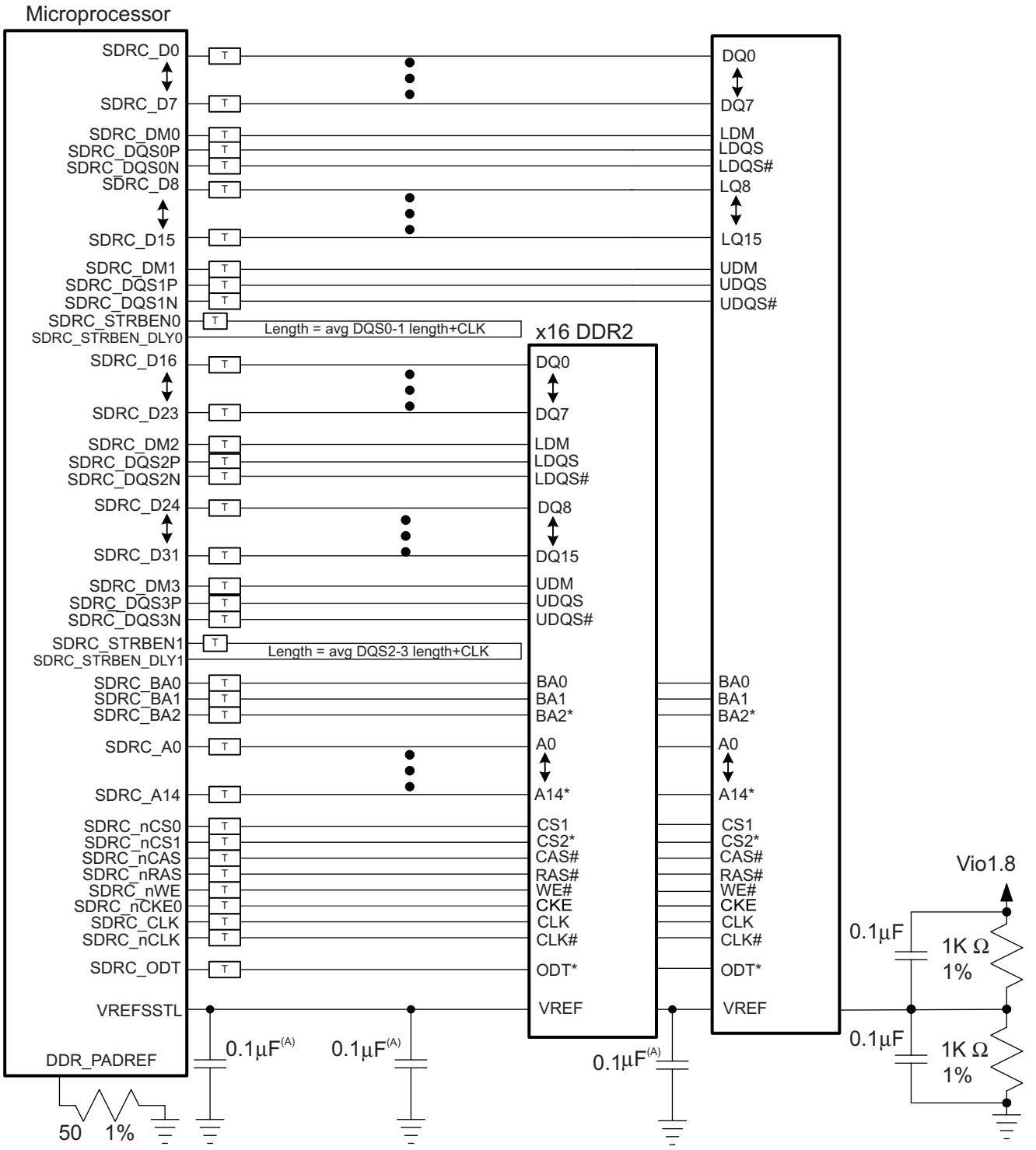

A. See *VREF Routing and Topology* figure for information on capacitor placement.

Figure 6-23. DDR2 Dual-Memory High Level Schematic

Copyright © 2009–2014, Texas Instruments Incorporated

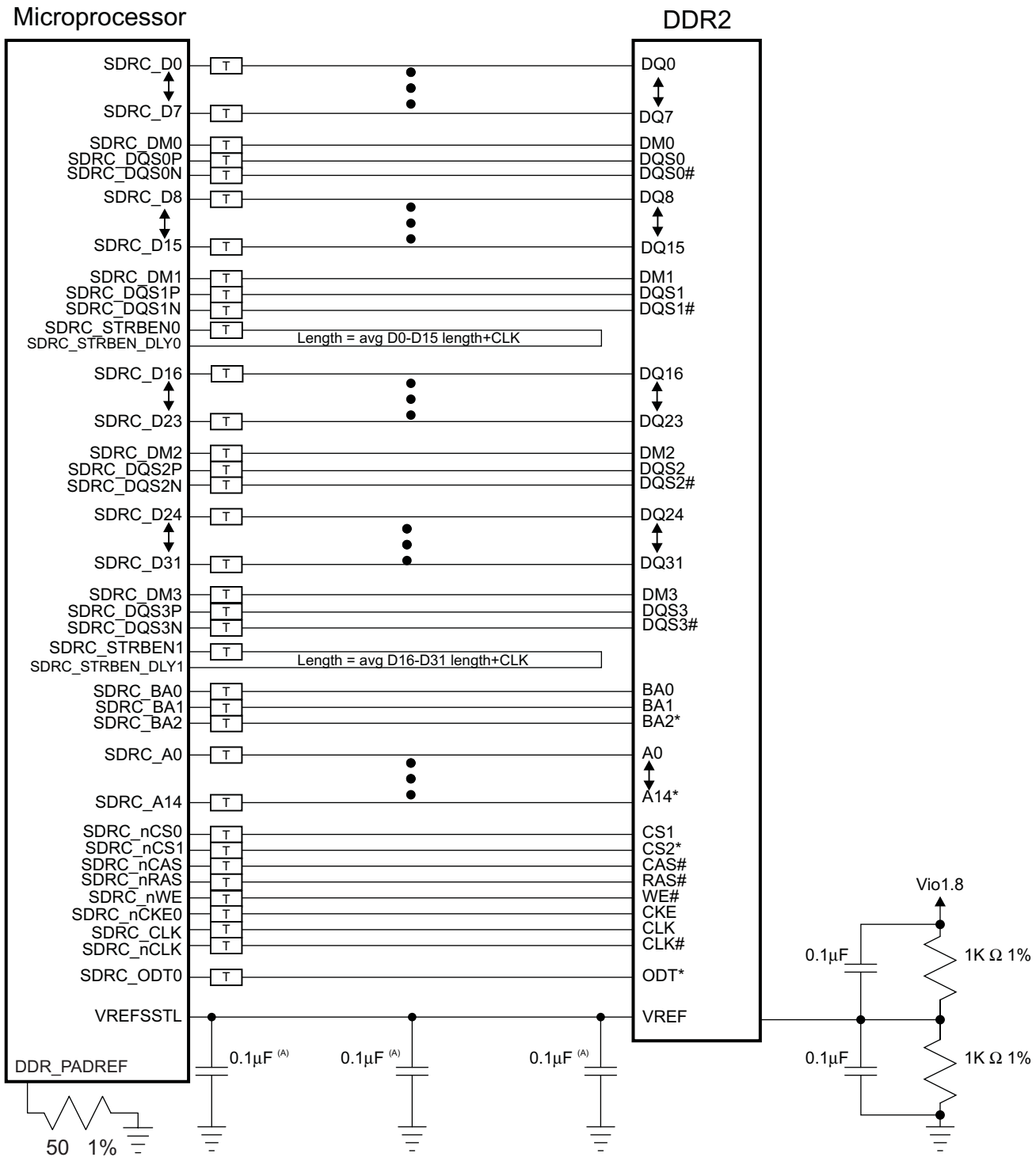

A. See *VREF Routing and Topology* figure for information on capacitor placement.

Figure 6-24. DDR2 Single-Memory High Level Schematic

Table 6-24. PCB Stack Up Specifications

No.	Parameter	Min	Typ	Max	Unit	Notes
1	PCB Routing/Plane Layers	6				
2	Signal Routing Layers	3				
3	Full ground layers under DDR2 routing Region	2				
4	Number of ground plane cuts allowed within DDR routing region			0		
5	Number of ground reference planes required for each DDR2 routing layer	1				
6	Number of layers between DDR2 routing layer and ground plane			0		
7	PCB Routing Feature Size		4		Mils	
8	PCB Trace Width w		4		Mils	
9	PCB BGA escape via pad size		20		Mils	
10	PCB BGA escape via hole size		10		Mils	
11	AM3517/05 BGA pad size		12			See Note (1)
12	DDR2 Device BGA pad size					See Note (2)
13	Single Ended Impedance, Zo	50		75	Ω	
14	Impedance Control	Z-5	Z	Z+5	Ω	See Note (3)

(1) The recommended pad size is 0.3 mm per IPC-7351 specification.
(2) Please refer to IPC standard IPC-7351 or manufacturer's recommendations for correct BGA pad size.
(3) Z is the nominal singled ended impedance selected for the PCB specified by item 12.

6.4.2.2.4 Placement

Figure 6-24 shows the required placement for the DDR2 devices. The dimensions for Figure 6-25 are defined in Table 6-25. The placement does not restrict the side of the PCB that the devices are mounted on. The ultimate purpose of the placement is to limit the maximum trace lengths and allow for proper routing space. For single-memory DDR2 systems, the second DDR2 device is omitted from the placement.

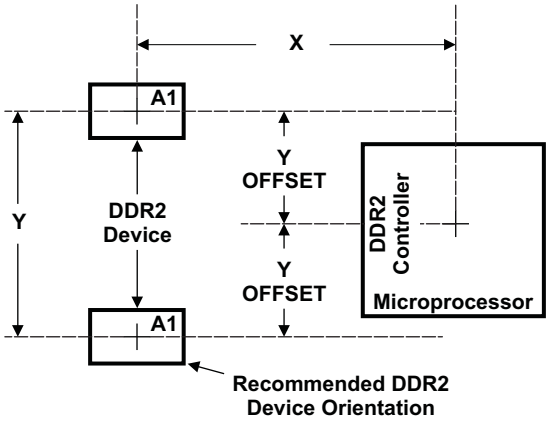

Figure 6-25. DDR2 Device Placement

Copyright © 2009–2014, Texas Instruments Incorporated

Table 6-25. Placement Specifications

No.	Parameter	Min	Max	Unit	Notes
1	X		1750	Mils	See Notes (1), (2)
2	Y		1280	Mils	See Notes (1), (2)
3	Y Offset		650	Mils	See Notes (1). (2), (3)
4	DDR2 Keepout Region				See Note (4)
5	Clearance from non-DDR2 signal to DDR2 Keepout Region	4		w	See Note (5)

(1) See Figure 6-23 for dimension definitions.
(2) Measurements from center of AM3517/05 device to center of DDR2 device.
(3) For single memory systems it is recommended that Y Offset be as small as possible.
(4) DDR2 Keepout region to encompass entire DDR2 routing area
(5) Non-DDR2 signals allowed within DDR2 keepout region provided they are separated from DDR2 routing layers by a ground plane.

6.4.2.2.5 DDR2 Keep Out Region

The region of the PCB used for the DDR2 circuitry must be isolated from other signals. The DDR2 keep out region is defined for this purpose and is shown in Figure 6-26. The size of this region varies with the placement and DDR routing. Additional clearances required for the keep out region are listed in Table 6-25.

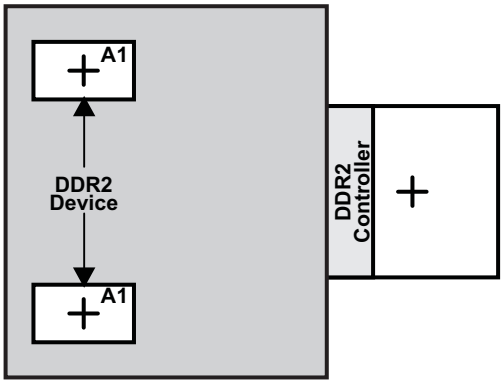

Region should encompass all DDR2 circuitry and varies depending on placement. Non-DDR2 signals should not be routed on the DDR signal layers within the DDR2 keep out region. Non-DDR2 signals may be routed in the region provided they are routed on layers separated from DDR2 signal layers by a ground layer. No breaks should be allowed in the reference ground layers in this region. In addition, the 1.8 V power plane should cover the entire keep out region.

Figure 6-26. DDR2 Keepout Region

6.4.2.2.6 Bulk Bypass Capacitors

Bulk bypass capacitors are required for moderate speed bypassing of the DDR2 and other circuitry. Table 6-26 contains the minimum numbers and capacitance required for the bulk bypass capacitors. Note that this table only covers the bypass needs of the AM3517/05 and DDR2 interfaces. Additional bulk bypass capacitance may be needed for other circuitry.

Table 6-26. Bulk Bypass Capacitors

No.	Parameter	Min	Max	Unit	Notes
1	VDDS Bulk Bypass Capacitor Count	3		Devices	See Note (1)
2	VDDS Bulk Bypass Total Capacitance	30		uF	

(1) These devices should be placed near the device they are bypassing, but preference should be given to the placement of the high-speed (HS) bypass caps.

Copyright © 2009–2014, Texas Instruments Incorporated

Table 6-26. Bulk Bypass Capacitors (continued)

No.	Parameter	Min	Max	Unit	Notes
3	DDR#1 Bulk Bypass Capacitor Count	1		Devices	See Note (1)
4	DDR#1 Bulk Bypass Total Capacitance	22		uF	
5	DDR#2 Bulk Bypass Capacitor Count	1		Devices	See Notes (1), (2)
6	DDR#2 Bulk Bypass Total Capacitance	22		uF	See Note (2)

(2) Only used on dual-memory systems

Copyright © 2009–2014, Texas Instruments Incorporated

6.4.2.2.7 High-Speed Bypass Capacitors

High-speed (HS) bypass capacitors are critical for proper DDR2 interface operation. It is particularly important to minimize the parasitic series inductance of the HS bypass cap, AM3517/05 DDR2 power, and AM3517/05 DDR2 ground connections. Table 6-27 contains the specification for the HS bypass capacitors as well as for the power connections on the PCB.

6.4.2.2.8 Net Classes

Table 6-28 lists the clock net classes for the DDR2 interface. Table 6-29 lists the signal net classes, and associated clock net classes, for the signals in the DDR2 interface. These net classes are used for the termination and routing rules that follow.

Table 6-27. High-Speed Bypass Capacitors

No.	Parameter	Min	Max	Unit	Notes
1	HS Bypass Capacitor Package Size		0402	10 Mils	See Note (1)
2	Distance from HS bypass capacitor to device being bypassed		250	Mils	
3	Number of connection vias for each HS bypass capacitor	2		Vias	See Note (2)
4	Trace length from bypass capacitor contact to connection via	1	30	Mils	
5	Number of connection vias for each DDR2 device power or ground balls	1		Vias	
6	Trace length from DDR2 device power ball to connection via		35	Mils	
7	VDDS HS Bypass Capacitor Count	20		Devices	See Note (3)
8	VDDS HS Bypass Capacitor Total Capacitance	1.2		µF	
9	DDR#1 HS Bypass Capacitor Count	8		Devices	See Note (3)
10	DDR#1 HS Bypass Capacitor Total Capacitance	0.4		µF	
11	DDR#2 HS Bypass Capacitor Count	8		Devices	See Notes (3), (4)
12	DDR#2 HS Bypass Capacitor Total Capacitance	0.4		µF	See Note (4)

(1) LxW, 10 mil units, i.e., a 0402 is a 40x20 mil surface mount capacitor
(2) An additional HS bypass capacitor can share the connection vias only if it is mounted on the opposite side of the board.
(3) These devices should be placed as close as possible to the device being bypassed.
(4) Only used on dual-memory systems

Copyright © 2009–2014, Texas Instruments Incorporated

Table 6-28. Clock Net Class Definitions

Clock Net Class	AM3517/05 Device Pin Names
CK	sdrc_clk/sdrc_nclk
DQS0	sdrc_dqs0p /sdrc_dqs0n
DQS1	sdrc_dqs1p /sdrc_dqs1n
DQS2	sdrc_dqs2p/sdrc_dqs2n
DQS3	sdrc_dqs3p/sdrc_dqs3n

Table 6-29. Signal Net Class Definitions

Clock Net Class	Associated Clock Net Class	AM3517/05 Device Pin Names
ADDR_CTRL	CK	sdrc_ba[2:0], sdrc_ncs1, sdrc_a[14:0], sdrc_ncs0 , sdrc_ncas, sdrc_nras, sdrc_nwe, sdrc_cke0
DQ0	DQS0	sdrc_d[7:0], sdrc_dm0
DQ1	DQS1	sdrc_d[15:8], sdrc_dm1
DQ2	DQS2	sdrc_d[23:16],sdrc_dm2
DQ3	DQS3	sdrc_d[31:24],sdrc_dm3
SDRC_STRBEN0	CK,DQS0,DQS1	sdrc_strben0, sdrc_strben_dly0
SDRC_STRBEN1	CK,DQS2,DQS3	sdrc_strben1, sdrc_strben_dly1

6.4.2.2.9 DDR2 Signal Termination

No terminations of any kind are required in order to meet signal integrity and overshoot requirements. Serial terminators are permitted, if desired, to reduce EMI risk; however, serial terminations are the only type permitted. Table 6-30 lists the specifications for the series terminators.

Table 6-30. DDR2 Signal Terminations

No.	Parameter	Min	Typ	Max	Unit	Notes
1	CLK Net Class	0		10	Ω	See Note (1)
2	ADDR_CTRL Net Class	0	22	Zo	Ω	See Notes (1), (2), (3)
3	Data Byte Net Classes (DQS0-DQS1, D0-D31)	0	22	Zo	Ω	See Notes (1), (2), (3)
4	SDRC_STRBENx Net Class (SDRC_STRBENx)	0	10	Zo	Ω	See Notes (1), (2), (3)

(1) Only series termination is permitted, parallel or SST specifically disallowed.
(2) Terminator values larger than typical only recommended to address EMI issues.
(3) Termination value should be uniform across net class.

Copyright © 2009–2014, Texas Instruments Incorporated

6.4.2.2.10 VREF Routing

VREF is used as a reference by the input buffers of the DDR2 memories as well as the AM3517/05. VREF is intended to be half of the DDR2 power supply voltage and should be created using a resistive divider as shown in Figure 6-23. Other methods of creating VREF are not recommended. Figure 6-27 shows the layout guidelines for VREF.

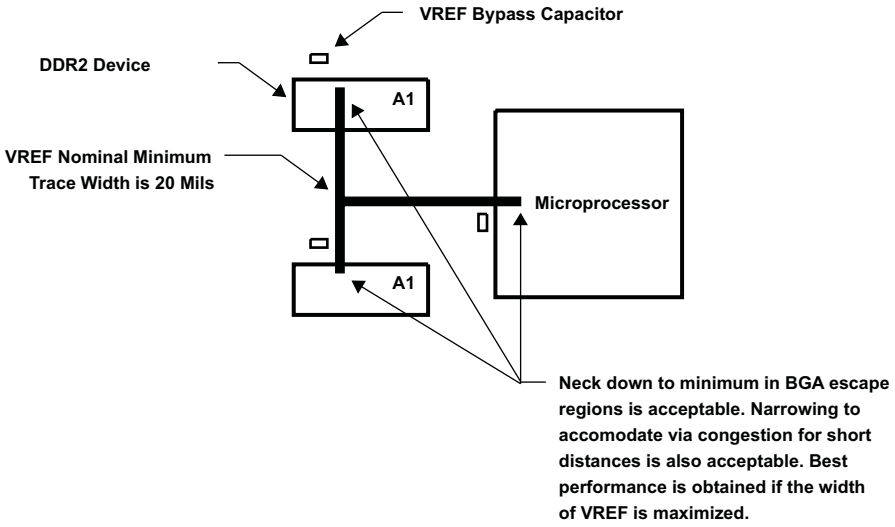

Figure 6-27. VREF Routing and Topology

6.4.2.2.11 DDR2 CLK and ADDR_CTRL Routing

Figure 6-28 shows the topology of the routing for the CLK and ADDR_CTRL net classes. The route is a balanced *T* as it is intended that the length of segments B and C be equal. In addition, the length of A should be maximized.

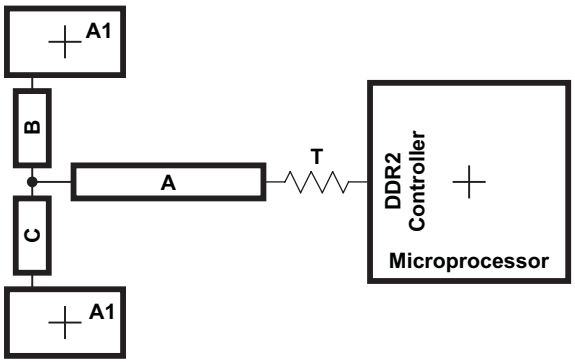

Figure 6-28. CLK and ADDR_CTRL Routing and Topology

Table 6-31. CLK and ADDR_CTRL Routing Specification (1)

No	Parameter	Min	Typ	Max	Unit	Notes
1	Center to center DQS-DQSN spacing			2w		
2	CK differential pair Skew Length Mismatch(2)			25	Mils	See Note (1)
3	CLKB to CLKC Skew Length Mismatch			25	Mils	
4	Center to center CLK to other DDR2 trace spacing	4w				See Note (3)
5	CK/ADDR_CTRL nominal trace length	CACLM-50	CACLM	CACLM+50	Mils	See Note (4)
6	ADDR_CTRL to CLK Skew Length Mismatch			100	Mils	
7	ADDR_CTRL to ADDR_CTRL Skew Length Mismatch			100	Mils	
8	Center to center ADDR_CTRL to other DDR2 trace spacing	4w				See Note (3)
9	Center to center ADDR_CTRL to other ADDR_CTRL trace spacing	3w				See Note (3)
10	ADDR_CTRL A to B, ADDR_CTRL A to C, Skew Length Mismatch			100	Mils	See Note (1)
11	ADDR_CTRL B to C Skew Length Mismatch			100	Mils	

(1) Series terminator, if used, should be located closest to AM3517/05.
(2) Differential impedance should be 100-ohms.
(3) Center to center spacing is allowed to fall to minimum (w) for up to 500 mils of routed length to accommodate BGA escape and routing congestion.
(4) CACLM is the longest Manhattan distance of the CLK and ADDR_CTRL net classes.

Figure 6-29 shows the topology and routing for the DQS and Dx net classes; the routes are point to point. Skew matching across bytes is not needed nor recommended.

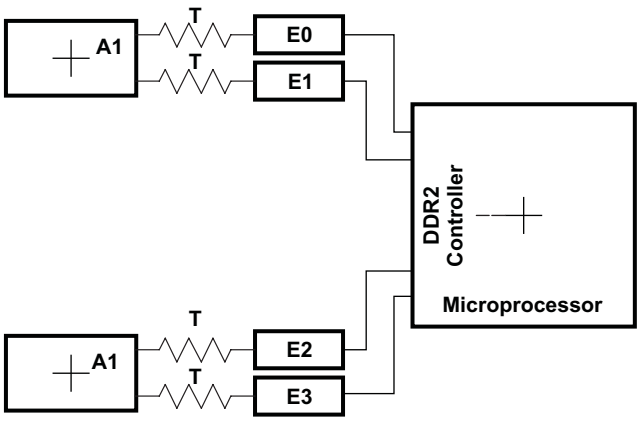

Figure 6-29. DQS and Dx Routing and Topology

Copyright © 2009–2014, Texas Instruments Incorporated

Table 6-32. DQS and Dx Routing Specification(1) (2)

No.	Parameter	Min	Typ	Max	Unit	Notes
1	Center to center DQS-DQSN spacing			2w		
2	DQS E differential pair Skew Length Mismatch(3)			25	Mils	
3	Center to center DQS to other DDR2 trace spacing	4w				See Note (4)
4	DQS/Dx nominal trace length	DQLM-50	DQLM	DQLM+ 50	Mils	See Notes (2), (5)
5	Dx to DQS Skew Length Mismatch			100	Mils	See Note (5)
6	Dx to Dx Skew Length Mismatch			100	Mils	See Note (5)
7	Center to center Dx to other DDR2 trace spacing	4w				See Notes (4), (6)
8	Center to Center Dx to other Dx trace spacing	3w				See Notes (7), (4)

(1) "Dx" indicates a data line. E indicates length of DQS differential pair or Dx signal.
(2) Series terminator, if used, should be located closest to DDR.
(3) Differential impedance should be 100-ohms.
(4) Center to center spacing is allowed to fall to minimum (w) for up to 500 mils of routed length to accommodate BGA escape and routing congestion.
(5) There is no need and it is not recommended to skew match across data bytes, i.e., from DQS0 and data byte 0 to DQS1 and data byte 1.
(6) Dx's from other DQS domains are considered *other DDR2 trace*.
(7) DQLM is the longest Manhattan distance of each of the DQS and Dx net classes.

Figure 6-30 shows the routing for the SDRC_STRBENx net classes. Table 6-33 contains the routing specification. SDRC_STRBENx net classes should be shielded from or routed on different layers than the DQx net classes.

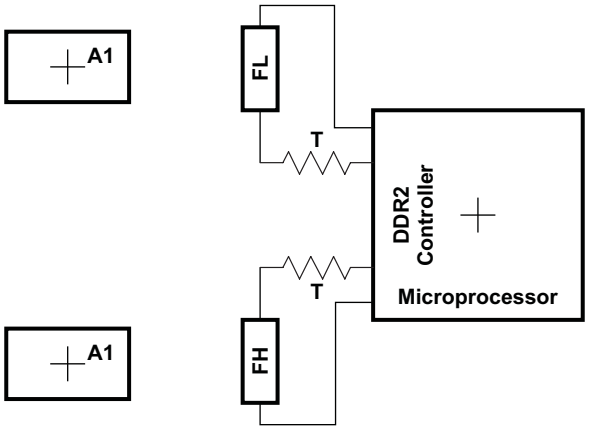

Figure 6-30. SDRC_STRBENx Routing

Table 6-33. SDRC_STRBENx Routing Specification(1)(2)

No.	Parameter	Min	Typ	Max	Unit	Notes
1	SDRC_STRBEN0 Length F		CKB0B1			See Note (3)
	SDRC_STRBEN1 Length F		CKB0B2			See Note (4)
3	Center to center SDRC_STRBENx to any other trace spacing	4w				
4	DQS/Dx nominal trace length	DQLM-50	DQLM	DQLM+50	Mils	
5	SDRC_STRBENx Skew			100	Mils	See Note (5)

(1) STRBENx termination resistors should be placed close to AM3517/05 STRBENx signal (not close to STRBEN_DLYx signal).
(2) Ensure signal velocities across different layers are taken into account when calculating STRBENx length. For example, if DQS0 and DSQ1 are 1inch each, and DQS0 is on a layer that is 10% faster, use 1.1inch as the length for DQS0.
(3) CKB0B1 is the sum of the length of the CLK (the portion that goes to the memory associated with DQS0 and DQS1) plus the average length of the DQS0 and DQS1 differential pairs.
(4) CKB0B2 is the sum of the length of the CLK (the portion that goes to the memory associated with DQS2 and DQS3) plus the average length of the DQS2 and DQS3 differential pairs.
(5) Skew from CKB0B1 or CKB0B2.

6.4.2.2.12 On Die Termination (ODT)

ODT should only be used with 1 chip select as shown in Figure 6-31. If using sdrc_cs0 and sdrc_cs1, sdrc_odt should not be used. ODT signals should be tied off at the memory.

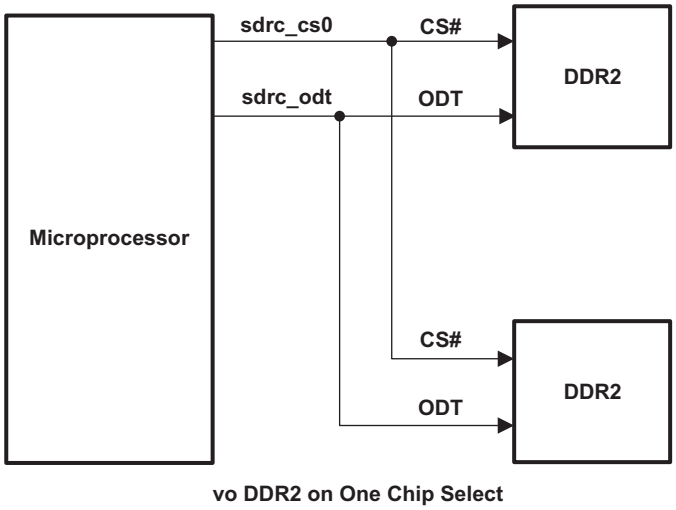

Figure 6-31. ODT Connection Using One Chip select (sdrc_cs0)

Copyright © 2009–2014, Texas Instruments Incorporated

6.5 Video Interfaces

6.5.1 Video Processing Subsystem (VPSS)

The Video Processing Sub-System (VPSS) provides a Video Processing Front End (VPFE) input interface for external imaging peripherals (i.e., image sensors, video decoders, and so forth).

6.5.1.1 Video Processing Front End (VPFE)

The Video Processing Front-End (VPFE) controller receives input video/image data from external capture devices and stores it to external memory which is transferred into the external memory via a built in DMA engine. An internal buffer block provides a high bandwidth path between the VPSS module and the external memory. The Cortex-A8 will process the image data based on application requirements.

6.5.1.1.1 Video Processing Front End (VPFE) Timing

Table 6-34 and Table 6-35 assume testing over recommended operating conditions.

Table 6-34. VPFE Timing Requirements

NO.	PARAMETER		1.8V, 3.3V		
			MIN	MAX	UNIT
VF1	$t_{c(VDIN_CLK)}$	Cycle time, pixel clock input, VDIN_CLK	13.33	100	ns
VF2	$t_{su(VDIN_D-VDIN_CLK)}$	Setup time, VDIN_D to VDIN_CLK rising edge	3.5		ns
VF3	$t_{su(VDIN_HD-VDIN_CLK)}$	Setup time, VDIN_HD to VDIN_CLK rising edge	3.5		ns
VF4	$t_{su(VDIN_VD-VDIN_CLK)}$	Setup time, VDIN_VD to VDIN_CLK rising edge	3.5		ns
VF5	$t_{su(VDIN_WEN-VDIN_CLK)}$	Setup time, VDIN_WEN to VDIN_CLK rising edge	3.5		ns
VF6	$t_{su(C_FLD-VDIN_CLK)}$	Setup time, VDIN_FIELD to VDIN_CLK rising edge	3.5		ns
VF7	$t_{h(VDIN_CLK-VDIN_D)}$	Hold time, VDIN_D valid after VDIN_CLK rising edge	2.5		ns
VF8	$t_{h(VDIN-HD-VDIN_CLK)}$	Hold time, VDIN_HD to VDIN_CLK rising edge	2.5		ns
VF9	$t_{h(VDIN_VD-VDIN_CLK)}$	Hold time, VDIN_VD to VDIN_CLK rising edge	2.5		ns
VF10	$t_{h(VDIN_WEN-VDIN_CLK)}$	Hold time, VDIN_WEN to VDIN_CLK rising edge	2.5		ns
VF11	$t_{h(C_FLD-VDIN_CLK)}$	Hold time, VDIN_FIELD to VDIN_CLK rising edge	2.5		ns

Table 6-35. VPFE Output Switching Characteristics

NO.	PARAMETER		1.8V, 3.3V		
			MIN	MAX	UNIT
VF12	$t_{d(VDIN_HD-VDIN_CLK)}$	Output delay time, VDIN_HD to CLK rising edge		10	ns
VF13	$t_{d(VDIN_VD-VDIN_CLK)}$	Output delay time, VDIN_VD to CLK rising edge		10	ns
VF14	$t_{d(VDIN_WEN-VDIN_CLK)}$	Output delay time, VDIN_WEN to CLK rising edge		10	ns
VF15	$t_{oh(VDIN_HD-VDIN_CLK)}$	Output hold time, VDIN_HD to CLK rising edge	0.5		ns
VF16	$t_{oh(VDIN_VD-VDIN_CLK)}$	Output hold time, VDIN_VD to CLK rising edge	0.5		ns
VF17	$t_{oh(C_FLD-VDIN_CLK)}$	Output hold time, VDIN_FLD to CLK rising edge	0.5		ns

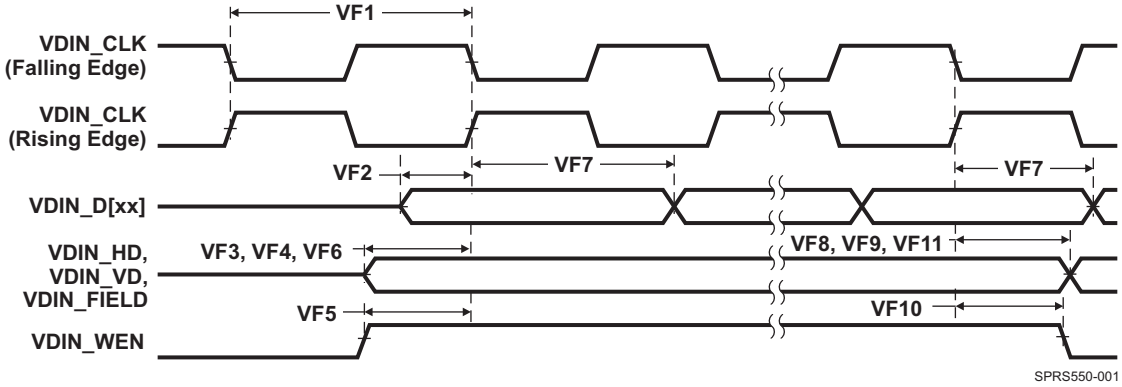

Figure 6-32. VPFE0 Input Timings

Copyright © 2009–2014, Texas Instruments Incorporated

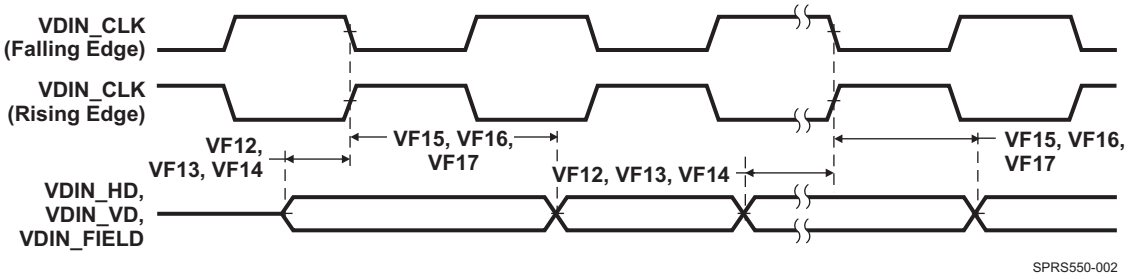

Figure 6-33. VPFE Output Timings

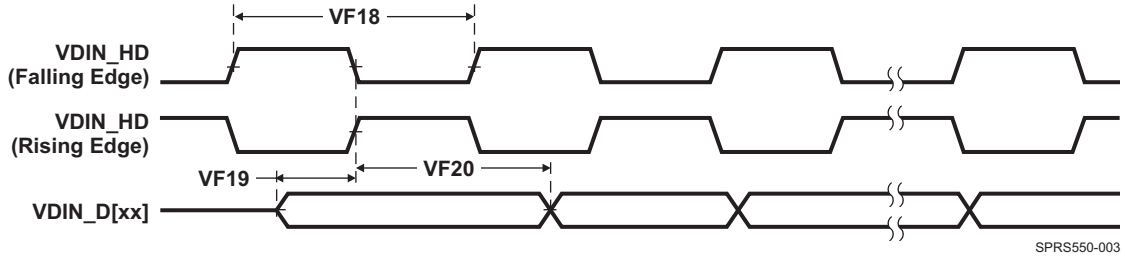

Figure 6-34. VPFE Input Timings With VDIN0_HD as Pixel Clock

6.5.2 Display Subsystem (DSS)

The display subsystem (DSS) provides the logic to display the video frame from external (SDRAM) or internal (SRAM) memory on an LCD panel or a TV set. The DSS integrates a display controller. It can be used in two configurations:

- LCD display support in:
  - Bypass mode (RFBI module bypassed)
  - RFBI mode (through RFBI module)
- TV display support (not discussed in this document because of its analog IO signals)

The two display supports can be active at the same time.

6.5.2.1 LCD Display Support in Bypass Mode

Two types of LCD panel are supported:

- Thin film transistor (TFT) or active matrix technology
- Supertwisted nematic (STN) or passive matrix technology

Both configurations are discussed in the following paragraphs.

6.5.2.1.1 LCD Display in TFT Mode

Table 6-36 assumes testing over the recommended operating conditions (see Figure 6-35).

Table 6-36. LCD Display Interface Switching Characteristics in TFT Mode(1)

NO.	PARAMETER		1.8V, 3.3V		UNIT
			MIN	MAX	
DL0	$t_{d(PCLKA-HSYNCT)}$	Delay time, dss_pclk active edge to dss_hsync transition	-4.215	4.215	ns
DL1	$t_{d(PCLKA-VSYNCT)}$	Delay time, dss_pclk active edge to dss_vsync transition	-4.215	4.215	ns
DL2	$t_{d(PCLKA-ACBIASA)}$	Delay time, dss_pclk active edge to dss_acbias active level	-4.215	4.215	ns
DL3	$t_{d(PCLKA-DATAV)}$	Delay time, dss_pclk active edge to dss_data bus valid	-4.215	4.215	ns
DL4	$t_{c(PCLK)}$	Cycle time(2), dss_pclk	13.468		ns
DL5	$t_{w(PCLK)}$	Pulse duration, dss_pclk low or high	6.06	7.46	ns
	c_{load}	Load capacitance		25	pF

(1) The capacitive load is equivalent to 25 pF.
(2) The pixel clock frequency is software programmable via the pixel clock divider configuration from 1 to 255 division range in the DISPC_DIVISOR register.

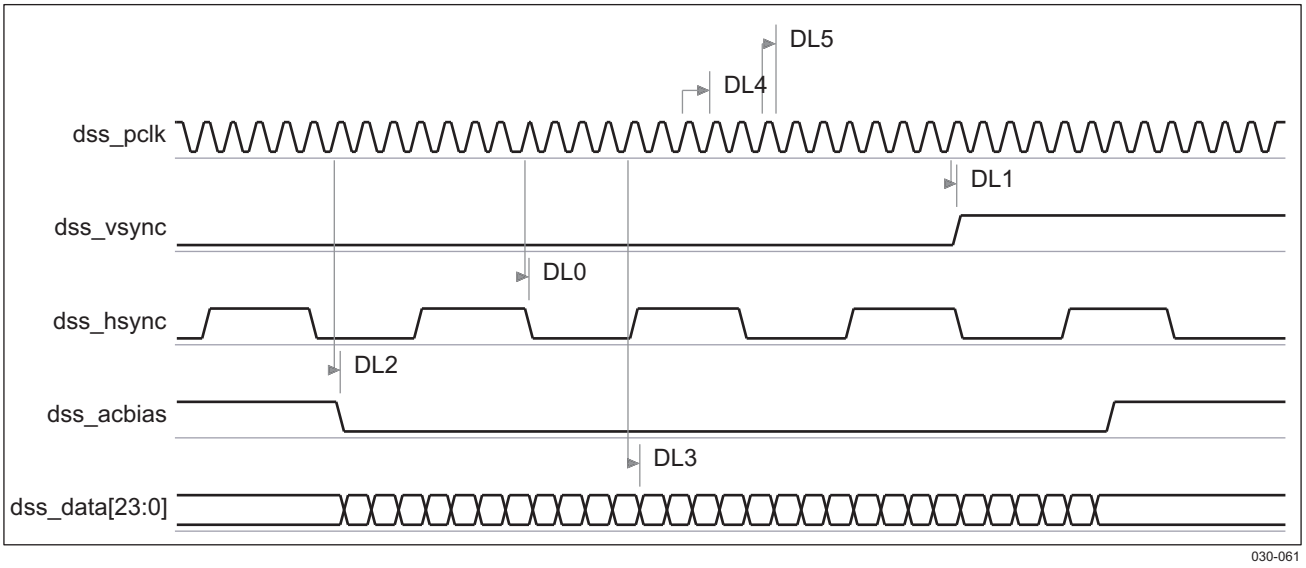

Figure 6-35. LCD Display in TFT Mode(1) (2) (3) (4)

(1) The pixel data bus depends on the use of 8-, 9-, 12-, 16-, 18-, or 24-bit per pixel data output pins.
(2) The pixel clock frequency is programmable.
(3) All timings not illustrated in the waveform are programmable by software, control signal polarity, and driven edge of dss_pclk.
(4) For more information, see the *AM35x ARM Microprocessor Technical Reference Manual* (SPRUGR0).

Copyright © 2009–2014, Texas Instruments Incorporated

6.5.2.1.2 LCD Display in STN Mode

Table 6-37 assumes testing over the recommended operating conditions (see Figure 6-36).

Table 6-37. LCD Display Interface Switching Characteristics in STN Mode(1) (2) (3)

NO.	PARAMETER		1.8V, 3.3V		UNIT
			MIN	MAX	
DL3	$t_{d(PCLKA-DATAV)}$	Delay time, dss_pclk active edge to dss_data bus valid	-4.21	6.9	ns
DL4	$t_{c(PCLK)}$	Cycle time(4), dss_pclk	22.73		ns
DL5	$t_{w(PCLK)}$	Pulse duration, dss_pclk low or high	10.23	12.5	ns
	c_{load}	Load capacitance		40	pF

(1) The DSS in STN mode is used with 4 or 8 pins only; unused pixel data bits always remain low.
(2) The capacitive load is equivalent to 40 pF.
(3) For more information, see the *AM35x ARM Microprocessor Technical Reference Manual* (SPRUGR0).
(4) The pixel clock frequency is software programmable via the pixel clock divider configuration from 1 to 255 division range in the DISPC_DIVISOR register.

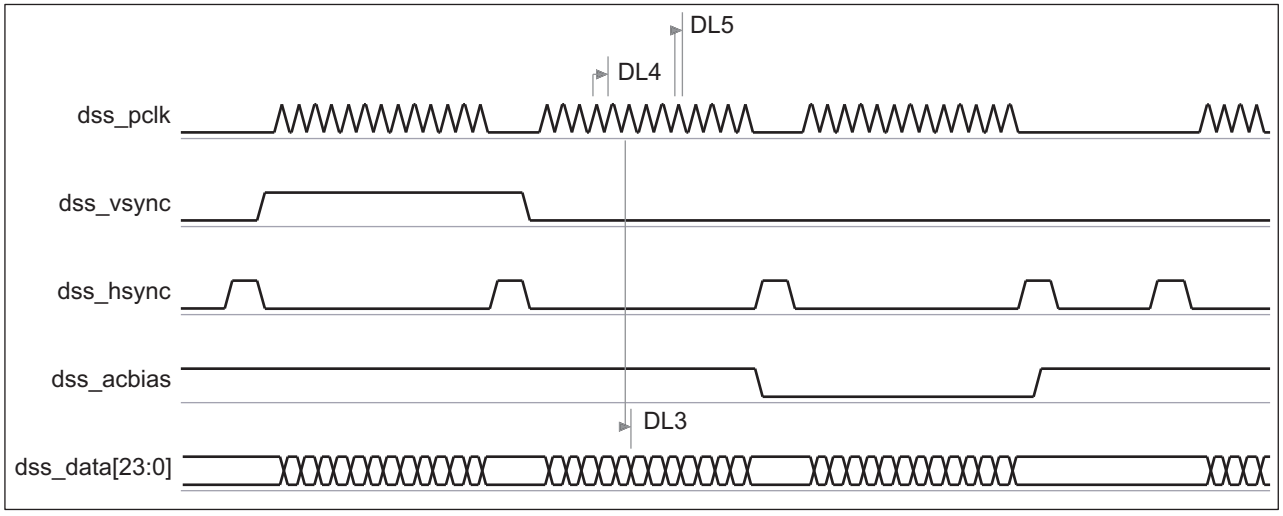

Figure 6-36. LCD Display in STN Mode(1) (2) (3) (4) (5)

(1) The pixel data bus depends on the use 4-, 8-, 12-, 16-, 18-, or 24-bit per pixel data output pins.
(2) All timings not illustrated in the waveform are programmable by software, control signal polarity, and driven edge of dss_pclk.
(3) dss_vsync width must be programmed to be as small as possible.
(4) The pixel clock frequency is programmable.
(5) For more information, see the *AM35x ARM Microprocessor Technical Reference Manual* (SPRUGR0).

Copyright © 2009–2014, Texas Instruments Incorporated

6.6 Serial Communications Interfaces

6.6.1 Multichannel Buffered Serial Port (McBSP) Timing

There are five McBSP modules called McBSP1 through McBSP5. McBSP provides a full-duplex, direct serial interface between the AM3517/05 device and other devices in a system such as other application devices or codecs. It can accommodate a wide range of peripherals and clocked frame-oriented protocols (I2S, PCM, and TDM) due to its high level of versatility.

The McBSP1-5 modules may support two types of data transfer at the system level:

- The full-cycle mode, for which one clock period is used to transfer the data, generated on one edge and captured on the same edge (one clock period later).
- The half-cycle mode, for which one half clock period is used to transfer the data, generated on one edge and captured on the opposite edge (one half clock period later). Note that a new data is generated only every clock period, which secures the required hold time.

The interface clock (CLKX/CLKR) activation edge (data/frame sync capture and generation) has to be configured accordingly with the external peripheral (activation edge capability) and the type of data transfer required at the system level.

The AM3517/05 McBSP1-5 timing characteristics are described for both rising and falling activation edges. McBSP1 supports:

- 6-pin mode: dx and dr as data pins; clkx, clkr, fsx, and fsr as control pins.
- 4-pin mode: dx and dr as data pins; clkx and fsx pins as control pins. The clkx and fsx pins are internally looped back via software configuration, respectively, to the clkr and fsr internal signals for data receive.

McBSP2, 3, 4, and 5 support only the 4-pin mode.

The following sections describe the timing characteristics for applications in normal mode (that is, AM3517/05 McBSPx connected to one peripheral) and TDM applications in multipoint mode.

6.6.1.1 McBSP in Normal Mode

Table 6-38 through Table 6-40 assume testing over the recommended operating conditions.

Table 6-38. McBSP Timing Conditions

TIMING CONDITION PARAMETER		1.8V, 3.3 V	UNIT
Input Conditions		VALUE	
t_R	Input signal rise time	2 (1)	ns
t_F	Input signal fall time	2	ns
Output Conditions			
C_{LOAD}	Output load capacitance	10	pF

(1) Maximum value.

Table 6-39. McBSP1,2,4,5 Output Clock Pulse Duration

PARAMETER		VDDSHV = 1.8V, 3.3V		UNIT
		MIN	MAX	
tC(CLK)	Cycle Time, mcbsp1_clkr/mcbspx_clkx (1)	20.83		ns
tW(CLKH)	Typical pulse duration, mcbsp1_clkr / mcbspx_clkx high (1)	0.5*P (2)	0.5*P (2)	ns

(1) In mcbspx, x identifies the McBSP number; 1, 2, 4, or 5.
(2) P = mcbsp1_clkr / mcbspx_clkx clock period.

Copyright © 2009–2014, Texas Instruments Incorporated

Table 6-39. McBSP1,2,4,5 Output Clock Pulse Duration (continued)

PARAMETER		VDDSHV = 1.8V, 3.3V		UNIT
tW(CLKL)	Typical pulse duration, mcbsp1_clkr / mcbspx_clkx low(1)	0.5*P(2)	0.5*P(2)	ns
tdc(CLK)	Duty cycle error, mcbsp1_clkr / mcbspx_clkx(1)	-0.75	0.75	ns

Table 6-40. McBSP3 Output Clock Pulse Duration

PARAMETER		VDDSHV = 1.8V, 3.3V		UNIT
		MIN	MAX	
tC(CLK)	Cycle time, mcbsp3_clkx	31.25		ns
tW(CLKH)	Typical pulse duration, mcbsp3_clkx high	0.5*P(1)	0.5*P(1)	ns
tW(CLKL)	Typical pulse duration, mcbsp3_clkx low	0.5*P(1)	0.5*P(1)	ns
tdc(CLK)	Duty cycle error, mcbsp3_clkx	-0.75	0.75	ns

(1) P = mcbsp3_clkx clock period

6.6.1.1.1 McBSP1

Table 6-41 through Table 6-48 list the timing requirements and switching characteristics for McBSP1.

Table 6-41. McBSP1 Timing Requirements - Rising Edge and Receive Mode

No.	PARAMETER			VDDSHV=3.3V		VDDSHV=1.8V		UNIT
				MIN	MAX	MIN	MAX	
B3	tsu(DRV-CLKAE)	Setup time, mcbsp1_dr valid before mcbsp1_clkr / mcbsp1_clkx active edge	Half Cycle Master	5.0		5.0		ns
			Half Cycle Slave	5.2		5.2		ns
			Full Cycle Master	4.0		4.0		ns
			Full Cycle Slave	4.2		4.2		ns
B4	th(CLKAE-DRV)	Hold time, mcbsp1_dr valid after mcbsp1_clkr / mcbsp1_clkx active edge	Half Cycle Master	5.8		5.8		ns
			Half Cycle Slave	5.2		5.2		ns
			Full Cycle Master	1.5		1.5		ns
			Full Cycle Slave	0.9		0.9		ns
B5	tsu(FSV-CLKAE)	Setup time, mcbsp1_fsr / mcbsp1_fsx valid before mcbsp1_clkr / mcbsp1_clkx active edge	Half Cycle Slave	5.2		5.2		ns
			Full Cycle Slave	4.2		4.2		ns
B6	th(CLKAE-FSV)	Hold time, mcbsp1_fsr / mcbsp1_fsx valid after mcbsp1_clkr / mcbsp1_clkx active edge	Half Cycle Slave	0.5		0.5		ns
			Full Cycle Slave	1.0		1.0		ns

Table 6-42. McBSP1 Switching Characteristics - Rising Edge and Receive Mode

No.	PARAMETER			VDDSHV=3.3V		VDDSHV=1.8V		UNIT
				MIN	MAX	MIN	MAX	
B2	td(CLKAE-FSV)	Delay time, mcbsp1_clkr active edge to mcbsp1_fsr / mcbsp1_fsx valid		0.2	14.8	0.2	14.8	ns

Table 6-43. McBSP1 Timing Requirements - Rising Edge and Transmit Mode

No.	PARAMETER			VDDSHV = 3.3V		VDDSHV = 1.8V		UNIT
				MIN	MAX	MIN	MAX	
B5	tsu(FSXV-CLKXAE)	Setup time, mcbsp1_fsx valid before mcbsp1_clkx active edge	Full Cycle Slave	5.2		4.7		ns
			Half Cycle Slave	4.2		3.7		ns
B6	th(CLKXAE-FSXV)	Hold time, mcbsp1_fsx valid after mcbsp1_clkx active edge	Full Cycle Slave	5.2		4.7		ns
			Half Cycle Slave	1.0		0.5		ns

Table 6-44. McBSP1 Switching Characteristics - Rising Edge and Transmit Mode

No.	PARAMETER			VDDSHV = 3.3V		VDDSHV = 1.8V		UNIT
				MIN	MAX	MIN	MAX	
B2	td(CLKXAE-FSXV)	Delay time, mcbsp1_clkx active edge to mcbsp1_fsx valid		0.2	14.8	0.7	14.8	ns
B8	td(CLKXAE-DXV)	Delay time, mcbsp1_clkx active edge to mcbsp1_dx valid	Master	0.6	14.8	0.6	14.8	ns
			Slave	0.6	14.8	0.6	14.8	ns

Table 6-45. McBSP1 Timing Requirements - Falling Edge and Receive Mode

No.	PARAMETER			VDDSHV = 3.3V		VDDSHV = 1.8V		UNIT
				MIN	MAX	MIN	MAX	
B3	tsu(DRV-CLKAE)	Setup time, mcbsp1_dr valid before mcbsp1_clkr / mcbsp1_clkx active edge	Half Cycle Master	5.0		5.0		ns
			Half Cycle Slave	5.2		5.2		ns
			Full Cycle Master	4.0		4.0		ns
			Full Cycle Slave	4.2		4.2		ns
B4	th(CLKAE-DRV)	Hold time, mcbsp1_dr valid after mcbsp1_clkr / mcbsp1_clkx active edge	Half Cycle Master	5.8		5.8		ns
			Half Cycle Slave	5.2		5.2		ns
			Full Cycle Master	1.5		1.5		ns
			Full Cycle Slave	0.9		0.9		ns
B5	tsu(FSV-CLKAE)	Setup time, mcbsp1_fsr / mcbsp1_fsx valid before mcbsp1_clkr / mcbsp1_clkx active edge	Half Cycle Slave	5.2		5.2		ns
			Full Cycle Slave	4.2		4.2		ns

Copyright © 2009–2014, Texas Instruments Incorporated

Table 6-45. McBSP1 Timing Requirements - Falling Edge and Receive Mode (continued)

No.	PARAMETER			VDDSHV = 3.3V		VDDSHV = 1.8V		UNIT
B6	th(CLKAE-FSV)	Hold time, mcbsp1_fsr / mcbsp1_fsx valid after mcbsp1_clkr / mcbsp1_clkx active edge	Half Cycle Slave	0.5		0.5		ns
			Full Cycle Slave	1.0		1.0		ns

Table 6-46. McBSP1 Switching Characteristics - Falling Edge and Receive Mode

No.	PARAMETER		VDDSHV = 3.3V		VDDSHV = 1.8V		UNIT
			MIN	MAX	MIN	MAX	
B2	td(CLKAE-FSV)	Delay time, mcbsp1_clkr / mcbsp1_clkx active edge to mcbsp1_fsr / mcbsp1_fsx valid	0.2	14.8	0.7	14.8	ns

Table 6-47. McBSP1 Timing Requirements - Falling Edge and Transmit Mode

No.	PARAMETER			VDDSHV = 3.3V		VDDSHV = 1.8V		UNIT
				MIN	MAX	MIN	MAX	
B5	tsu(FSXV-CLKXAE)	Setup time, mcbsp1_fsx valid before mcbsp1_clkx active edge	Half Cycle Slave	5.2		5.2		ns
			Full Cycle Slave	4.2		4.2		ns
B6	th(CLKXAE-FSXV)	Hold time, mcbsp1_fsx valid after mcbsp1_clkx active edge	Half Cycle Slave	5.2		5.2		ns
			Full Cycle Slave	1.0		1.0		ns

Table 6-48. McBSP1 Switching Characteristics - Falling Edge and Transmit Mode

No.	PARAMETER			VDDSHV = 3.3V		VDDSHV = 1.8V		UNIT
				MIN	MAX	MIN	MAX	
B2	td(CLKXAE-FSXV)	Delay time, mcbsp1_clkx active edge to mcbsp1_fsx valid		0.2	14.8	0.2	14.8	ns
B8	td(CLKXAE-DXV)	Delay time, mcbsp1_clkx active edge to mcbsp1_dx valid	Master	0.6	14.8	0.6	14.8	ns
			Slave	0.6	14.8	0.6	14.8	ns

Copyright © 2009–2014, Texas Instruments Incorporated

6.6.1.1.2 McBSP2

Table 6-49 through Table 6-56 list the timing requirements and switching characteristics for McBSP2.

Table 6-49. McBSP2 Timing Requirements - Rising Edge and Receive Mode

No.	PARAMETER			VDDSHV = 3.3V		VDDSHV = 1.8V		UNIT
				MIN	MAX	MIN	MAX	
B3	tsu(DRV-CLKXAE)	Setup time, mcbsp2_dr valid before mcbsp2_clkx active edge	Half Cycle Master	5.0		5.0		ns
			Half Cycle Slave	5.2		5.2		ns
			Full Cycle Master	4.2		4.2		ns
			Full Cycle Slave	4.2		4.2		ns
B4	th(CLKXAE-DRV)	Hold time, mcbsp2_dr valid after mcbsp2_clkx active edge	Half Cycle Master	5.8		5.8		ns
			Half Cycle Slave	5.2		5.2		ns
			Full Cycle Master	1.5		1.5		ns
			Full Cycle Slave	0.9		0.9		ns
B5	tsu(FSV-CLKXAE)	Setup time, mcbsp2_fsx valid before mcbsp2_clkx active edge	Half Cycle Slave	5.2		5.2		ns
			Full Cycle Slave	4.2		4.2		ns
B6	th(CLKXAE-FSV)	Hold time, mcbsp2_fsx valid after mcbsp2_clkx active edge	Half Cycle Slave	5.2		5.2		ns
			Full Cycle Slave	1.0		1.0		ns

Table 6-50. McBSP2 Switching Characteristics - Rising Edge and Receive Mode

No.	PARAMETER			VDDSHV = 3.3V		VDDSHV = 1.8V		UNIT
				MIN	MAX	MIN	MAX	
B2	td(CLKXAE-FSXV)	Delay time, mcbsp2_clkx active edge to mcbsp2_fsx valid		0.2	14.8	0.2	14.8	ns

Table 6-51. McBSP2 Timing Requirements - Rising Edge and Transmit Mode

No.	PARAMETER			VDDSHV = 3.3V		VDDSHV = 1.8V		UNIT
				MIN	MAX	MIN	MAX	
B5	tsu(FSXV-CLKXAE)	Setup time, mcbsp2_fsx valid before mcbsp2_clkx active edge	Half Cycle Slave	5.2		4.7		ns
			Full Cycle Slave	4.2		3.7		ns
B6	th(CLKXAE-FSXV)	Hold time, mcbsp2_fsx valid after mcbsp2_clkx active edge	Half Cycle Slave	5.2		4.7		ns
			Full Cycle Slave	1.0		0.5		ns

Copyright © 2009–2014, Texas Instruments Incorporated

Table 6-52. McBSP2 Switching Characteristics - Rising Edge and Transmit Mode

No.	PARAMETER			VDDSHV = 3.3V		VDDSHV = 1.8V		UNIT
				MIN	MAX	MIN	MAX	
B2	td(CLKXAE-FSXV)	Delay time, mcbsp2_clkx active edge to mcbsp2_fsx valid		0.2	14.8	0.2	14.8	ns
B8	td(CLKXAE-DXV)	Delay time, mcbsp2_clkx active edge to mcbsp2_dx valid	Master	0.6	14.8	0.6	14.8	ns
			Slave	0.6	14.8	0.6	14.8	ns

Table 6-53. McBSP2 Timing Requirements - Falling Edge and Receive Mode

No.	PARAMETER			VDDSHV = 3.3V		VDDSHV = 1.8V		UNIT
				MIN	MAX	MIN	MAX	
B3	tsu(DRV-CLKXAE)	Setup time, mcbsp2_dr valid before mcbsp2_clkx active edge	Half Cycle Master	5.0		5.0		ns
			Half Cycle Slave	5.2		5.2		ns
			Full Cycle Master	4.2		4.2		ns
			Full Cycle Slave	4.2		4.2		ns
B4	th(CLKXAE-DRV)	Hold time, mcbsp2_dr valid after mcbsp2_clkx active edge	Half Cycle Master	5.8		5.8		ns
			Half Cycle Slave	5.2		5.2		ns
			Full Cycle Master	1.5		1.5		ns
			Full Cycle Slave	0.9		0.9		ns
B5	tsu(FSXV-CLKXAE)	Setup time, mcbsp2_fsx valid before mcbsp2_clkx active edge	Half Cycle Slave	5.2		5.2		ns
			Full Cycle Slave	4.2		4.2		ns
B6	th(CLKXAE-FSXV)	Hold time, mcbsp2_fsx valid after mcbsp2_clkx active edge	Half Cycle Slave	5.2		5.2		ns
			Full Cycle Slave	1.0		1.0		ns

Table 6-54. McBSP2 Switching Characteristics - Falling Edge and Receive Mode

No.	PARAMETER		VDDSHV = 3.3V		VDDSHV = 1.8V		UNIT
			MIN	MAX	MIN	MAX	
B2	td(CLKXAE-FSXV)	Delay time, mcbsp2_clkx active edge to mcbsp2_fsx valid	0.2	14.8	0.2	14.8	ns

Table 6-55. McBSP2 Timing Requirements - Falling Edge and Transmit Mode

No.	PARAMETER			VDDSHV = 3.3V		VDDSHV = 1.8V		UNIT
				MIN	MAX	MIN	MAX	
B5	tsu(FSXV-CLKXAE)	Setup time, mcbsp2_fsx valid before mcbsp2_clkx active edge	Half Cycle Slave	5.2		5.2		ns
			Full Cycle Slave	4.2		4.2		ns

Table 6-55. McBSP2 Timing Requirements - Falling Edge and Transmit Mode (continued)

No.	PARAMETER			VDDSHV = 3.3V		VDDSHV = 1.8V		UNIT
B6	th(CLKXAE-FSXV)	Hold time, mcbsp2_fsx valid after mcbsp2_clkx active edge	Half Cycle Slave	5.2		5.2		ns
			Full Cycle Slave	1.0		1.0		ns

Table 6-56. McBSP2 Switching Characteristics - Falling Edge and Transmit Mode

No.	PARAMETER			VDDSHV = 3.3V		VDDSHV = 1.8V		UNIT
				MIN	MAX	MIN	MAX	
B2	td(CLKXAE-FSXV)	Delay time, mcbsp2_clkx active edge to mcbsp2_fsx valid		0.2	14.8	0.2	14.8	ns
B8	td(CLKXAE-DXV)	Delay time, mcbsp2_clkx active edge to mcbsp2_dx valid	Master	0.6	14.8	0.6	14.8	ns
			Slave	0.6	14.8	0.6	14.8	ns

6.6.1.1.3 McBSP3

6.6.1.1.3.1 McBSP3 Multiplexed on McBSP3 Pins

Table 6-57 through Table 6-64 list the timing conditions and switching characteristics for McBSP3 multiplexed on McBSP3 pins.

Note: All timings apply only to Set #1- multiplexing on mcbsp3 pins.

Table 6-57. McBSP3 (Set #1) Timing Requirements - Rising Edge and Receive Mode

No.	PARAMETER			VDDSHV = 3.3V		VDDSHV = 1.8V		UNIT
				MIN	MAX	MIN	MAX	
B3	tsu(DRV-CLKXAE)	Setup time, mcbsp3_dr valid before mcbsp3_clkx active edge	Half Cycle Master	7.5		7.5		ns
			Half Cycle Slave	7.7		7.7		ns
			Full Cycle Master	5.6		5.6		ns
			Full Cycle Slave	5.8		5.8		ns
B4	th(CLKXAE-DRV)	Hold time, mcbsp3_dr valid after mcbsp3_clkx active edge	Half Cycle Master	8.3		8.3		ns
			Half Cycle Slave	7.7		7.7		ns
			Full Cycle Master	1.5		1.5		ns
			Full Cycle Slave	0.9		0.9		ns
B5	tsu(FSV-CLKXAE)	Setup time, mcbsp3_fsx valid before mcbsp3_clkx active edge	Half Cycle Slave	7.7		7.7		ns
			Full Cycle Slave	5.8		5.8		ns
B6	th(CLKXAE-FSV)	Hold time, mcbsp3_fsx valid after mcbsp3_clkx active edge	Half Cycle Slave	7.7		7.7		ns
			Full Cycle Slave	1.0		1.0		ns

Copyright © 2009–2014, Texas Instruments Incorporated

Table 6-58. McBSP3 (Set #1) Switching Characteristics - Rising Edge and Receive Mode

No.	PARAMETER		VDDSHV = 3.3V		VDDSHV = 1.8V		UNIT
			MIN	MAX	MIN	MAX	
B2	td(CLKXAE-FSXV)	Delay time, mcbsp3_clkx active edge to mcbsp3_fsx valid	0.2	22.2	0.2	22.2	ns

Table 6-59. McBSP3 (Set #1) Timing Requirements - Rising Edge and Transmit Mode

No.	PARAMETER			VDDSHV = 3.3V		VDDSHV = 1.8V		UNIT
				MIN	MAX	MIN	MAX	
B5	tsu(FSXV-CLKXAE)	Setup time, mcbsp3_fsx valid before mcbsp3_clkx active edge	Half Cycle Slave	7.7		7.7		ns
			Full Cycle Slave	5.8		5.8		ns
B6	th(CLKXAE-FSXV)	Hold time, mcbsp3_fsx valid after mcbsp3_clkx active edge	Half Cycle Slave	7.7		7.7		ns
			Full Cycle Slave	1		1		ns

Table 6-60. McBSP3 (Set #1) Switching Characteristics - Rising Edge and Transmit Mode

No.	PARAMETER			VDDSHV = 3.3V		VDDSHV = 1.8V		UNIT
				MIN	MAX	MIN	MAX	
B2	td(CLKXAE-FSXV)	Delay time, mcbsp3_clkx active edge to mcbsp3_fsx valid		0.2	22.2	0.2	22.2	ns
B8	td(CLKXAE-DXV)	Delay time, mcbsp3_clkx active edge to mcbsp3_dx valid	Master	0.6	22.2	0.6	22.2	ns
			Slave	0.6	22.2	0.6	22.2	ns

Table 6-61. McBSP3 (Set #1) Timing Requirements - Falling Edge and Receive Mode

No.	PARAMETER			VDDSHV = 3.3V		VDDSHV = 1.8V		UNIT
				MIN	MAX	MIN	MAX	
	tsu(DRV-CLKXAE)	Setup time, mcbsp3_dr valid before mcbsp3_clkx active edge	Half Cycle Master	7.5		7.5		ns
			Half Cycle Slave	7.7		7.7		ns
			Full Cycle Master	5.6		5.6		ns
			Full Cycle Slave	5.8		5.8		ns
	th(CLKXAE-DRV)	Hold time, mcbsp3_dr valid after mcbsp3_clkx active edge	Half Cycle Master	8.3		8.3		ns
			Half Cycle Slave	7.7		7.7		ns
			Full Cycle Master	1.5		1.5		ns
			Full Cycle Slave	0.9		0.9		ns
B5	tsu(FXSV-CLKXAE)	Setup time, mcbsp3_fsx valid before mcbsp3_clkx active edge	Half Cycle Slave	7.7		7.7		ns
			Full Cycle Slave	5.8		5.8		ns
B6	th(CLKXAE-FSXV)	Hold time, mcbsp3_fsx valid after mcbsp3_clkx active edge	Half Cycle Slave	7.7		7.7		ns
			Full Cycle Slave	1.0		1.0		ns

Copyright © 2009–2014, Texas Instruments Incorporated

Table 6-62. McBSP3 (Set #1) Switching Characteristics - Falling Edge and Receive Mode

No.	PARAMETER		VDDSHV = 3.3V		VDDSHV = 1.8V		UNIT
			MIN	MAX	MIN	MAX	
B2	td(CLKXAE-FSXV)	Delay time, mcbsp3_clkx active edge to mcbsp3_fsx valid	0.2	22.2	0.2	22.2	ns

Table 6-63. McBSP3 (Set #1) Timing Requirements - Falling Edge and Transmit Mode

No.	PARAMETER			VDDSHV = 3.3V		VDDSHV = 1.8V		UNIT
				MIN	MAX	MIN	MAX	
B5	tsu(FSXV-CLKXAE)	Setup time, mcbsp3_fsx valid before mcbsp3_clkx active edge	Half Cycle Slave	5.2		5.2		ns
			Full Cycle Slave	4.2		4.2		ns
B6	th(CLKXAE-FSXV)	Hold time, mcbsp3_fsx valid after mcbsp3_clkx active edge	Half Cycle Slave	5.2		5.2		ns
			Full Cycle Slave	1.0		1.0		ns

Table 6-64. McBSP3 (Set #1) Switching Characteristics - Falling Edge and Transmit Mode

No.	PARAMETER			VDDSHV = 3.3V		VDDSHV = 1.8V		UNIT
				MIN	MAX	MIN	MAX	
B2	td(CLKXAE-FSXV)	Delay time, mcbsp3_clkx active edge to mcbsp3_fsx valid		0.2	22.2	0.2	22.2	ns
B8	td(CLKXAE-DXV)	Delay time, mcbsp3_clkx active edge to mcbsp3_dx valid	Master	0.6	22.2	0.6	22.2	ns
			Slave	0.6	22.2	0.6	22.2	ns

6.6.1.1.3.2 McBSP3 Multiplexed on UART2 or McBSP1 Pins

Table 6-65 through Table 6-72 list the timing conditions and switching characteristics for McBSP3 multiplexed on UART2 or McBSP1 pins.

Note: These timings only apply to Set #2 (multiplexing mode on uart2 pins) and Set #3 (multiplexing on mcbsp1 pins).

Table 6-65. McBSP3 (Sets #2 and #3) Timing Requirements - Rising Edge and Receive Mode

No.	PARAMETER			VDDSHV = 3.3V		VDDSHV = 1.8V		UNIT
				MIN	MAX	MIN	MAX	
B3	tsu(DRV-CLKXAE)	Setup time, mcbsp3_dr valid before mcbsp3_clkx active edge	Half Cycle Master	5.0		5.0		ns
			Half Cycle Slave	5.2		5.2		ns
			Full Cycle Master	4.2		4.2		ns
			Full Cycle Slave	4.2		4.2		ns
B4	th(CLKXAE-DRV)	Hold time, mcbsp3_dr valid after mcbsp3_clkx active edge	Half Cycle Master	5.8		5.8		ns
			Half Cycle Slave	5.2		5.2		ns
			Full Cycle Master	1.5		1.5		ns
			Full Cycle Slave	0.9		0.9		ns

Copyright © 2009–2014, Texas Instruments Incorporated

Table 6-65. McBSP3 (Sets #2 and #3) Timing Requirements - Rising Edge and Receive Mode (continued)

No.	PARAMETER			VDDSHV = 3.3V		VDDSHV = 1.8V		UNIT
B5	tsu(FSV-CLKXAE)	Setup time, mcbsp3_fsx valid before mcbsp3_clkx active edge	Half Cycle Slave	5.2		5.2		ns
			Full Cycle Slave	4.2		4.2		ns
B6	th(CLKXAE-FSV)	Hold time, mcbsp3_fsx valid after mcbsp3_clkx active edge	Half Cycle Slave	5.2		5.2		ns
			Full Cycle Slave	1.0		1.0		ns

Table 6-66. McBSP3 (Sets #2 and #3) Switching Characteristics - Rising Edge and Receive Mode

No.	PARAMETER			VDDSHV = 3.3V		VDDSHV = 1.8V		UNIT
				MIN	MAX	MIN	MAX	
B2	td(CLKXAE-FSXV)	Delay time, mcbsp3_clkx active edge to mcbsp3_fsx valid		0.2	14.8	0.2	14.8	ns

Table 6-67. McBSP3 (Sets #2 and #3) Timing Requirements - Rising Edge and Transmit Mode

No.	PARAMETER			VDDSHV = 3.3V		VDDSHV = 1.8V		UNIT
				MIN	MAX	MIN	MAX	
B5	tsu(FSXV-CLKXAE)	Setup time, mcbsp3_fsx valid before mcbsp3_clkx active edge	Half Cycle Slave	5.2		5.2		ns
			Full Cycle Slave	4.2		4.2		ns
B6	th(CLKXAE-FSXV)	Hold time, mcbsp3_fsx valid after mcbsp3_clkx active edge	Half Cycle Slave	5.2		5.2		ns
			Full Cycle Slave	1.0		1.0		ns

Table 6-68. McBSP3 (Sets #2 and #3) Switching Characteristics - Rising Edge and Transmit Mode

No.	PARAMETER			VDDSHV = 3.3V		VDDSHV = 1.8V		UNIT
				MIN	MAX	MIN	MAX	
B2	td(CLKXAE-FSXV)	Delay time, mcbsp3_clkx active edge to mcbsp3_fsx valid		0.2	14.8	0.2	14.8	ns
B8	td(CLKXAE-DXV)	Delay time, mcbsp3_clkx active edge to mcbsp3_dx valid	Master	0.6	14.8	0.6	14.8	ns
			Slave	0.6	14.8	0.6	14.8	ns

Table 6-69. McBSP3 (Sets #2 and #3) Timing Requirements - Falling Edge and Receive Mode

No.	PARAMETER			VDDSHV = 3.3V		VDDSHV = 1.8V		UNIT
				MIN	MAX	MIN	MAX	
B3	tsu(DRV-CLKXAE)	Setup time, mcbsp3_dr valid before mcbsp3_clkx active edge	Half Cycle Master	5.0		5.0		ns
			Half Cycle Slave	5.2		5.2		ns
			Full Cycle Master	4.2		4.2		ns
			Full Cycle Slave	4.2		4.2		ns

Copyright © 2009–2014, Texas Instruments Incorporated

Table 6-69. McBSP3 (Sets #2 and #3) Timing Requirements - Falling Edge and Receive Mode (continued)

No.	PARAMETER			VDDSHV = 3.3V		VDDSHV = 1.8V		UNIT
B4	th(CLKXAE-DRV)	Hold time, mcbsp3_dr valid after mcbsp3_clkx active edge	Half Cycle Master	5.8		5.8		ns
			Half Cycle Slave	5.2		5.2		ns
			Full Cycle Master	1.5		1.5		ns
			Full Cycle Slave	0.9		0.9		ns
B5	tsu(FXSV-CLKXAE)	Setup time, mcbsp3_fsx valid before mcbsp3_clkx active edge	Half Cycle Slave	5.2		5.2		ns
			Full Cycle Slave	4.2		4.2		ns
B6	th(CLKXAE-FSXV)	Hold time, mcbsp3_fsx valid after mcbsp3_clkx active edge	Half Cycle Slave	5.2		5.2		ns
			Full Cycle Slave	1.0		1.0		ns

Table 6-70. McBSP3 (Sets #2 and #3) Switching Characteristics - Falling Edge and Receive Mode

No.	PARAMETER		VDDSHV = 3.3V		VDDSHV = 1.8V		UNIT
			MIN	MAX	MIN	MAX	
B2	td(CLKXAE-FSXV)	Delay time, mcbsp3_clkx active edge to mcbsp3_fsx valid	0.2	14.8	0.2	14.8	ns

Table 6-71. McBSP3 (Sets #2 and #3) Timing Requirements - Falling Edge and Transmit Mode

No.	PARAMETER			VDDSHV = 3.3V		VDDSHV = 1.8V		UNIT
				MIN	MAX	MIN	MAX	
B5	tsu(FSXV-CLKXAE)	Setup time, mcbsp3_fsx valid before mcbsp3_clkx active edge	Half Cycle Slave	5.2		5.2		ns
			Full Cycle Slave	4.2		4.2		ns
B6	th(CLKXAE-FSXV)	Hold time, mcbsp3_fsx valid after mcbsp3_clkx active edge	Half Cycle Slave	5.2		5.2		ns
			Full Cycle Slave	1.0		1.0		ns

Table 6-72. McBSP3 (Sets #2 and #3) Switching Characteristics - Falling Edge and Transmit Mode

No.	PARAMETER			VDDSHV = 3.3V		VDDSHV = 1 .8V		UNIT
				MIN	MAX	MIN	MAX	
B2	td(CLKXAE-FSXV)	Delay time, mcbsp3_clkx active edge to mcbsp3_fsx valid		0.2	14.8	0.2	14.8	ns
B8	td(CLKXAE-DXV)	Delay time, mcbsp3_clkx active edge to mcbsp3_dx valid	Master	0.6	14.8	0.6	14.8	ns
			Slave	0.6	14.8	0.6	14.8	ns

6.6.1.1.4 McBSP4

Table 6-73 through Table 6-80 list the timing requirements and switching characteristics for McBSP4.

Table 6-73. McBSP4 Timing Requirements - Rising Edge and Receive Mode

No.	PARAMETER	VDDSHV = 3.3V		VDDSHV = 1.8V		UNIT
		MIN	MAX	MIN	MAX	

Copyright © 2009–2014, Texas Instruments Incorporated

Table 6-73. McBSP4 Timing Requirements - Rising Edge and Receive Mode (continued)

No.	PARAMETER			VDDSHV = 3.3V		VDDSHV = 1.8V		UNIT
B3	tsu(DRV-CLKXAE)	Setup time, mcbsp4_dr valid before mcbsp4_clkx active edge	Half Cycle Master	7.5		7.5		ns
			Half Cycle Slave	7.7		7.7		ns
			Full Cycle Master	3.2		3.2		ns
			Full Cycle Slave	4.2		4.2		ns
B4	th(CLKXAE-DRV)	Hold time, mcbsp4_dr valid after mcbsp4_clkx active edge	Half Cycle Master	7.7		7.7		ns
			Half Cycle Slave	5.2		5.2		ns
			Full Cycle Master	1.5		1.5		ns
			Full Cycle Slave	0.9		0.9		ns
B5	tsu(FSV-CLKXAE)	Setup time, mcbsp4_fsx valid before mcbsp4_clkx active edge	Half Cycle Slave	7.7		7.7		ns
			Full Cycle Slave	4.2		4.2		ns
B6	th(CLKXAE-FSV)	Hold time, mcbsp4_fsx valid after mcbsp4_clkx active edge	Half Cycle Slave	5.2		5.2		ns
			Full Cycle Slave	1.0		1.0		ns

Table 6-74. McBSP4 Switching Characteristics - Rising Edge and Receive Mode

No.	PARAMETER			VDDSHV = 3.3V		VDDSHV = 1.8V		UNIT
				MIN	MAX	MIN	MAX	
B2	td(CLKXAE-FSXV)	Delay time, mcbsp4_clkx active edge to mcbsp4_fsx valid		0.2	16.6	0.2	16.6	ns

Table 6-75. McBSP4 Timing Requirements - Rising Edge and Transmit Mode

No.	PARAMETER			VDDSHV = 3.3V		VDDSHV = 1.8V		UNIT
				MIN	MAX	MIN	MAX	
B5	tsu(FSXV-CLKXAE)	Setup time, mcbsp4_fsx valid before mcbsp4_clkx active edge	Half Cycle Slave	7.7		7.7		ns
			Full Cycle Slave	3.7		3.7		ns
B6	th(CLKXAE-FSXV)	Hold time, mcbsp4_fsx valid after mcbsp4_clkx active edge	Half Cycle Slave	1.0		1.0		ns
			Full Cycle Slave	1.0		1.0		ns

Table 6-76. McBSP4 Switching Characteristics - Rising Edge and Transmit Mode

No.	PARAMETER			VDDSHV = 3.3V		VDDSHV = 1.8V		UNIT
				MIN	MAX	MIN	MAX	
B2	td(CLKXAE-FSXV)	Delay time, mcbsp4_clkx active edge to mcbsp4_fsx valid		0.2	16.6	0.2	16.6	ns

Copyright © 2009–2014, Texas Instruments Incorporated

Table 6-76. McBSP4 Switching Characteristics - Rising Edge and Transmit Mode (continued)

No.	PARAMETER			VDDSHV = 3.3V		VDDSHV = 1.8V		UNIT
B8	td(CLKXAE-DXV)	Delay time, mcbsp4_clkx active edge to mcbsp4_dx valid	Master	0.6	16.6	0.6	16.6	ns
			Slave	0.6	17.3	0.6	17.3	ns

Table 6-77. McBSP4 Timing Requirements - Falling Edge and Receive Mode

No.	PARAMETER			VDDSHV = 3.3V		VDDSHV = 1.8V		UNIT
				MIN	MAX	MIN	MAX	
B3	tsu(DRV-CLKXAE)	Setup time, mcbsp4_dr valid before mcbsp4_clkx active edge	Half Cycle Master	7.5		7.5		ns
			Half Cycle Slave	7.7		7.7		ns
			Full Cycle Master	5.6		5.6		ns
			Full Cycle Slave	5.8		5.8		ns
B4	th(CLKXAE-DRV)	Hold time, mcbsp4_dr valid after mcbsp4_clkx active edge	Half Cycle Master	7.7		7.7		ns
			Half Cycle Slave	5.2		5.2		ns
			Full Cycle Master	1.5		1.5		ns
			Full Cycle Slave	0.9		0.9		ns
B5	tsu(FXSV-CLKXAE)	Setup time, mcbsp4_fsx valid before mcbsp4_clkx active edge	Half Cycle Slave	7.7		7.7		ns
			Full Cycle Slave	5.8		5.8		ns
B6	th(CLKXAE-FSXV)	Hold time, mcbsp4_fsx valid after mcbsp4_clkx active edge	Half Cycle Slave	5.2		5.2		ns
			Full Cycle Slave	1.0		1.0		ns

Table 6-78. McBSP4 Switching Characteristics - Falling Edge and Receive Mode

No.	PARAMETER		VDDSHV = 3.3V		VDDSHV = 1.8V		UNIT
			MIN	MAX	MIN	MAX	
B2	td(CLKXAE-FSXV)	Delay time, mcbsp4_clkx active edge to mcbsp4_fsx valid	0.2	16.6	0.2	16.6	ns

Table 6-79. McBSP4 Timing Requirements - Falling Edge and Transmit Mode

No.	PARAMETER			VDDSHV = 3.3V		VDDSHV = 1.8V		UNIT
				MIN	MAX	MIN	MAX	
B5	tsu(FSXV-CLKXAE)	Setup time, mcbsp4_fsx valid before mcbsp4_clkx active edge	Half Cycle Slave	7.7		7.7		ns
			Full Cycle Slave	3.7		3.7		ns
B6	th(CLKXAE-FSXV)	Hold time, mcbsp4_fsx valid after mcbsp4_clkx active edge	Half Cycle Slave	5.2		5.2		ns
			Full Cycle Slave	1.0		1.0		ns

Copyright © 2009–2014, Texas Instruments Incorporated

Table 6-80. McBSP4 Switching Characteristics - Falling Edge and Transmit Mode

No.	PARAMETER			VDDSHV = 3.3V		VDDSHV = 1.8V		UNIT
				MIN	MAX	MIN	MAX	
B2	td(CLKXAE-FSXV)	Delay time, mcbsp4_clkx active edge to mcbsp4_fsx valid		0.2	16.6	0.2	16.6	ns
B8	td(CLKXAE-DXV)	Delay time, mcbsp4_clkx active edge to mcbsp4_dx valid	Master	0.6	16.6	0.6	16.6	ns
			Slave	0.6	17.3	0.6	17.3	ns

6.6.1.1.5 McBSP5

Table 6-81 through Table 6-88 list the timing conditions and switching characteristics for McBSP5.

Table 6-81. McBSP5 Timing Requirements - Rising Edge and Receive Mode

No.	PARAMETER			VDDSHV = 3.3V		VDDSHV = 1.8V		UNIT
				MIN	MAX	MIN	MAX	
B3	tsu(DRV-CLKXAE)	Setup time, mcbsp5_dr valid before mcbsp5_clkx active edge	Half Cycle Master	7.5		7.5		ns
			Half Cycle Slave	7.7		7.7		ns
			Full Cycle Master	5.6		5.6		ns
			Full Cycle Slave	5.8		5.8		ns
B4	th(CLKXAE-DRV)	Hold time, mcbsp5_dr valid after mcbsp5_clkx active edge	Half Cycle Master	7.5		7.5		ns
			Half Cycle Slave	7.7		7.7		ns
			Full Cycle Master	1.5		1.5		ns
			Full Cycle Slave	0.9		0.9		ns
B5	tsu(FSV-CLKXAE)	Setup time, mcbsp5_fsx valid before mcbsp5_clkx active edge	Half Cycle Slave	7.7		7.7		ns
			Full Cycle Slave	5.8		5.8		ns
B6	th(CLKXAE-FSV)	Hold time, mcbsp5_fsx valid after mcbsp5_clkx active edge	Half Cycle Slave	7.7		7.7		ns
			Full Cycle Slave	1.0		1.0		ns

Table 6-82. McBSP5 Switching Characteristics - Rising Edge and Receive Mode

No.	PARAMETER		VDDSHV = 3.3V		VDDSHV = 1.8V		UNIT
			MIN	MAX	MIN	MAX	
B2	td(CLKXAE-FSXV)	Delay time, mcbsp5_clkx active edge to mcbsp5_fsx valid	0.2	14.8	0.7	14.8	ns

Table 6-83. McBSP5 Timing Requirements - Rising Edge and Transmit Mode

No.	PARAMETER			VDDSHV = 3.3V		VDDSHV = 1.8V		UNIT
				MIN	MAX	MIN	MAX	
B5	tsu(FSXV-CLKXAE)	Setup time, mcbsp5_fsx valid before mcbsp5_clkx active edge	Half Cycle Slave	7.7		7.7		ns
			Full Cycle Slave	5.8		5.8		ns

Table 6-83. McBSP5 Timing Requirements - Rising Edge and Transmit Mode (continued)

No.	PARAMETER			VDDSHV = 3.3V		VDDSHV = 1.8V		UNIT
B6	th(CLKXAE-FSXV)	Hold time, mcbsp5_fsx valid after mcbsp5_clkx active edge	Half Cycle Slave	7.7		7.7		ns
			Full Cycle Slave	1.0		1.0		ns

Table 6-84. McBSP5 Switching Characteristics - Rising Edge and Transmit Mode

No.	PARAMETER			VDDSHV = 3.3V		VDDSHV = 1.8V		UNIT
				MIN	MAX	MIN	MAX	
B2	td(CLKXAE-FSXV)	Delay time, mcbsp5_clkx active edge to mcbsp5_fsx valid		0.2	14.8	0.2	14.8	ns
B8	td(CLKXAE-DXV)	Delay time, mcbsp5_clkx active edge to mcbsp5_dx valid	Master	0.6	14.8	0.6	14.8	ns
			Slave	0.6	14.8	0.6	14.8	ns

Table 6-85. McBSP5 Timing Requirements - Falling Edge and Receive Mode

No.	PARAMETER			VDDSHV = 3.3V		VDDSHV = 1.8V		UNIT
				MIN	MAX	MIN	MAX	
B3	tsu(DRV-CLKXAE)	Setup time, mcbsp5_dr valid before mcbsp5_clkx active edge	Half Cycle Master	7.5		7.5		ns
			Half Cycle Slave	7.7		7.7		ns
			Full Cycle Master	5.6		5.6		ns
			Full Cycle Slave	5.8		5.8		ns
B4	th(CLKXAE-DRV)	Hold time, mcbsp5_dr valid after mcbsp5_clkx active edge	Half Cycle Master	8.3		8.3		ns
			Half Cycle Slave	7.7		7.7		ns
			Full Cycle Master	1.5		1.5		ns
			Full Cycle Slave	0.9		0.9		ns
B5	tsu(FXSV-CLKXAE)	Setup time, mcbsp5_fsx valid before mcbsp5_clkx active edge	Half Cycle Slave	7.7		7.7		ns
			Full Cycle Slave	5.8		5.8		ns
B6	th(CLKXAE-FSXV)	Hold time, mcbsp5_fsx valid after mcbsp5_clkx active edge	Half Cycle Slave	7.7		7.7		ns
			Full Cycle Slave	1.0		1.0		ns

Table 6-86. McBSP5 Switching Characteristics - Falling Edge and Receive Mode

No.	PARAMETER		VDDSHV = 3.3V		VDDSHV = 1.8V		UNIT
			MIN	MAX	MIN	MAX	
B2	td(CLKXAE-FSXV)	Delay time, mcbsp5_clkx active edge to mcbsp5_fsx valid	0.2	22.2	0.2	22.2	ns

Copyright © 2009–2014, Texas Instruments Incorporated

Table 6-87. McBSP5 Timing Requirements - Falling Edge and Transmit Mode

No.	PARAMETER			VDDSHV = 3.3V		VDDSHV = 1.8V		UNIT
				MIN	MAX	MIN	MAX	
B5	tsu(FSXV-CLKXAE)	Setup time, mcbsp5_fsx valid before mcbsp5_clkx active edge	Half Cycle Slave	7.7		7.7		ns
			Full Cycle Slave	5.8		5.8		ns
B6	th(CLKXAE-FSXV)	Hold time, mcbsp5_fsx valid after mcbsp5_clkx active edge	Half Cycle Slave	7.7		7.7		ns
			Full Cycle Slave	1.0		1.0		ns

Table 6-88. McBSP5 Switching Characteristics - Falling Edge and Transmit Mode

No.	PARAMETER			VDDSHV = 3.3V		VDDSHV = 1.8V		UNIT
				MIN	MAX	MIN	MAX	
B2	td(CLKXAE-FSXV)	Delay time, mcbsp5_clkx active edge to mcbsp5_fsx valid		0.2	22.2	0.2	22.2	ns
B8	td(CLKXAE-DXV)	Delay time, mcbsp5_clkx active edge to mcbsp5_dx valid	Master	0.6	22.2	0.6	22.2	ns
			Slave	0.6	22.2	0.6	22.2	ns

6.6.1.1.6 McBSP in TDM Mode

Table 6-89 through Table 6-91 assume testing over the recommended operating conditions.

Table 6-89. McBSP Timing Conditions – TDM in Multipoint Mode

PARAMETER	DESCRIPTION	VDDSHV = 1.8V or 3.3V		UNIT
		MIN	MAX	
tr	Input signal rise time	1	8.5	ns
tf	Input signal fall time	1	8.5	ns
Cload	Output load capacitance		40	pf

Table 6-90. McBSP Timing Requirements — TDM in Multipoint Mode

INDEX	PARAMETER	DESCRIPTION	VDDSHV = 1.8V or 3.3V		UNIT
			MIN	MAX	
	tw(CLKH)	Cycle Time, mcbspx_clkx	162.8		ns
	tw(CLKH)	Typical Pulse duration, mcbspx_clkx high	81.4		ns
	tw(CLKL)	Typical Pulse duration, mcbspx_clkx low	81.4		ns
	tdc(CLK)	Duty cycle error, mcbspx_clkx	-8.14	8.14	ns
B3	tsu(DRV-CLKAE)	Setup time, mcbspx_dr valid before mcbspx_clkx active edge	9		ns
B4	th(CLKAE-DRV)	Hold time, mcbspx_dr valid after mcbspx_clkx active edge	2.4		ns
B5	tsu(FSV-CLKAE)	Setup time, mcbspx_fsx valid before mcbspx_clkx active edge	9		ns
B6	th(CLKAE-FSV)	Hold time, mcbspx_fsx valid after mcbspx_clkx active edge	2.4		ns

Copyright © 2009–2014, Texas Instruments Incorporated

Table 6-91. McBSP Switching Characteristics — TDM in Multipoint Mode

INDEX	PARAMETER	DESCRIPTION	VDDSHV = 1.8V or 3.3V		UNIT
			MIN	MAX	
B8	td(CLKXAE-DXV)	Delay time, mcbspx_clkx active edge to mcbspx_dx valid	0.6	16.8	ns

6.6.1.1.7 McBSP Timing Diagrams

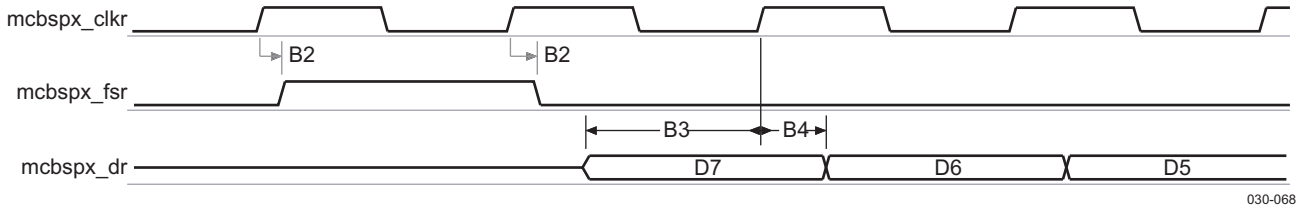

Figure 6-37. McBSP Rising Edge Receive Timing in Master Mode

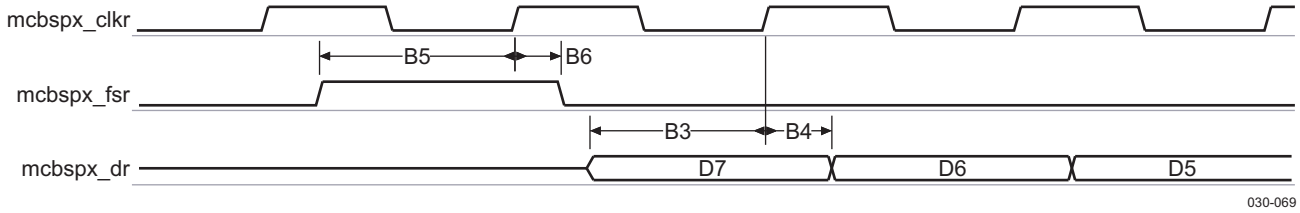

Figure 6-38. McBSP Rising Edge Receive Timing in Slave Mode



Figure 6-39. McBSP Rising Edge Transmit Timing in Master Mode

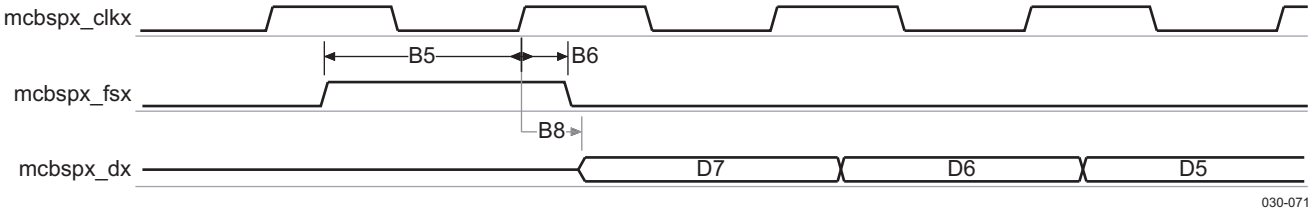

Figure 6-40. McBSP Rising Edge Transmit Timing in Slave Mode

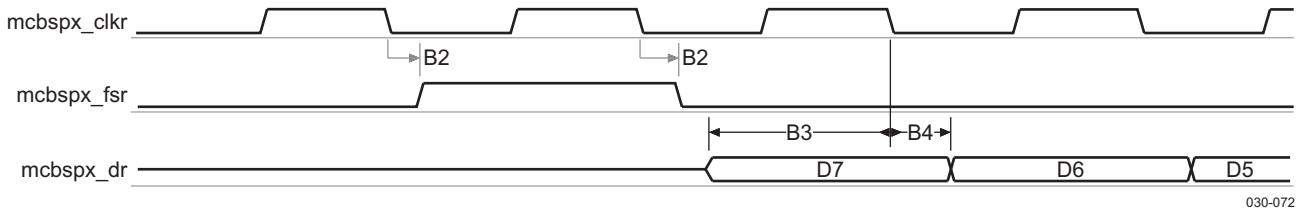

Figure 6-41. McBSP Falling Edge Receive Timing in Master Mode

Copyright © 2009–2014, Texas Instruments Incorporated

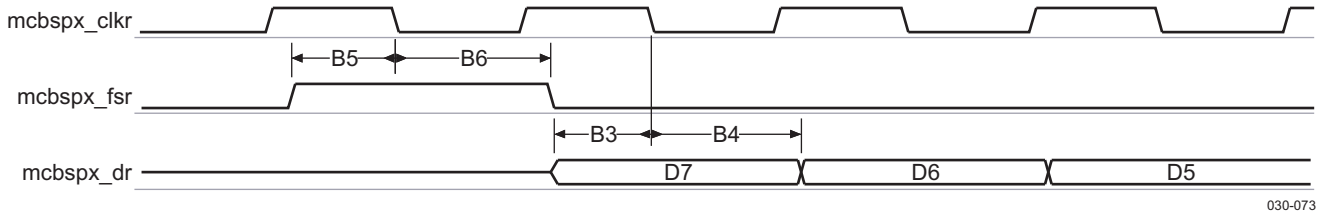

Figure 6-42. McBSP Falling Edge Receive Timing in Slave Mode

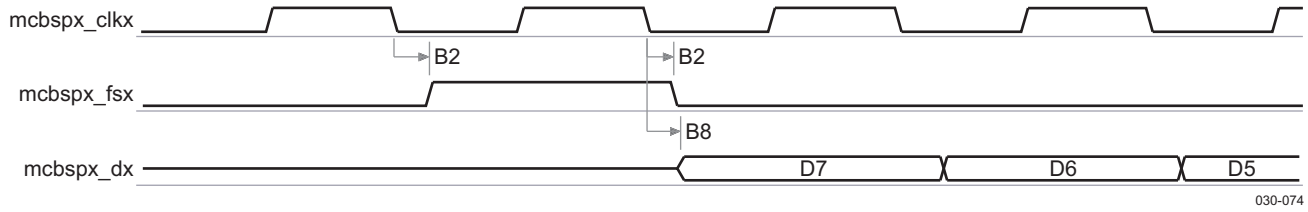

Figure 6-43. McBSP Falling Edge Transmit Timing in Master Mode

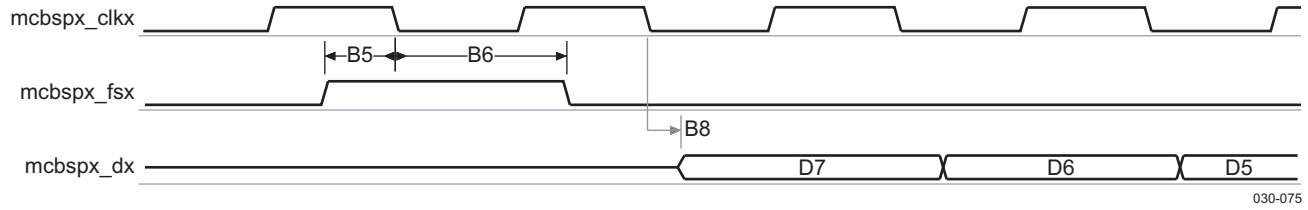

Figure 6-44. McBSP Falling Edge Transmit Timing in Slave Mode

6.6.2 Multichannel Serial Port Interface (McSPI) Timing

The multichannel SPI is a master/slave synchronous serial bus. The McSPI1 module supports up to four peripherals and the others (McSPI2, McSPI3, and McSPI4) support up to two peripherals. The following timings are applicable to the different configurations of McSPI in master/slave mode for any McSPI and any channel (n).

6.6.2.1 McSPI in Slave Mode

Table 6-92 and Table 6-93 assume testing over the recommended operating conditions.

Table 6-92. McSPI Interface Timing Requirements – Slave Mode

NO.	PARAMETER		1.8 V		3.3 V		UNIT
			MIN	MAX	MIN	MAX	
SS0	$t_{c(CLK)}$	Cycle time, mcspix_clk	41.67		41.67		ns
SS1	$t_{w(CLK)}$	Pulse duration, mcspix_clk high or low	18.75	22.92	11.25		ns
SS2	$t_{su(SIMOV-CLKAE)}$	Setup time, mcspix_simo valid before mcspix_clk active edge	4.2		4		ns
SS3	$t_{h(SIMOV-CLKAE)}$	Hold time, mcspix_simo valid after mcspix_clk active edge	4.6		3		ns
SS4	$t_{su(CS0V-CLKFE)}$	Setup time, mcspix_cs0 valid before mcspix_clk first edge	13.8		7		ns
SS5	$t_{h(CS0I-CLKLE)}$	Hold time, mcspix_cs0 invalid after mcspix_clk last edge	13.8		9.17		ns

Table 6-93. McSPI Interface Switching Characteristics(1) (2) (3) (4)

NO.	PARAMETER			1.8 V		3.3 V		UNIT
				MIN	MAX	MIN	MAX	
SS6	$t_{d(CLKAE-SOMIV)}$	Delay time, mcspix_clk active edge to mcspix_somi shifted		1.8	15.9	2	16.5	ns
SS7	$t_{d(CS0AE-SOMIV)}$	Delay time, mcspix_cs0 active edge to mcspix_somi shifted	Modes 0 and 2		16.38		15.9	ns

(1) The capacitive load is equivalent to 20 pF.
(2) In mcspix, x is equal to 1, 2, 3, or 4.
(3) The polarity of mcspix_clk and the active edge (rising or falling) on which mcspix_simo is driven and mcspix_somi is latched is all software configurable.
(4) This timing applies to all configurations regardless of mcspix_clk polarity and which clock edges are used to drive output data and capture input data.

Copyright © 2009–2014, Texas Instruments Incorporated

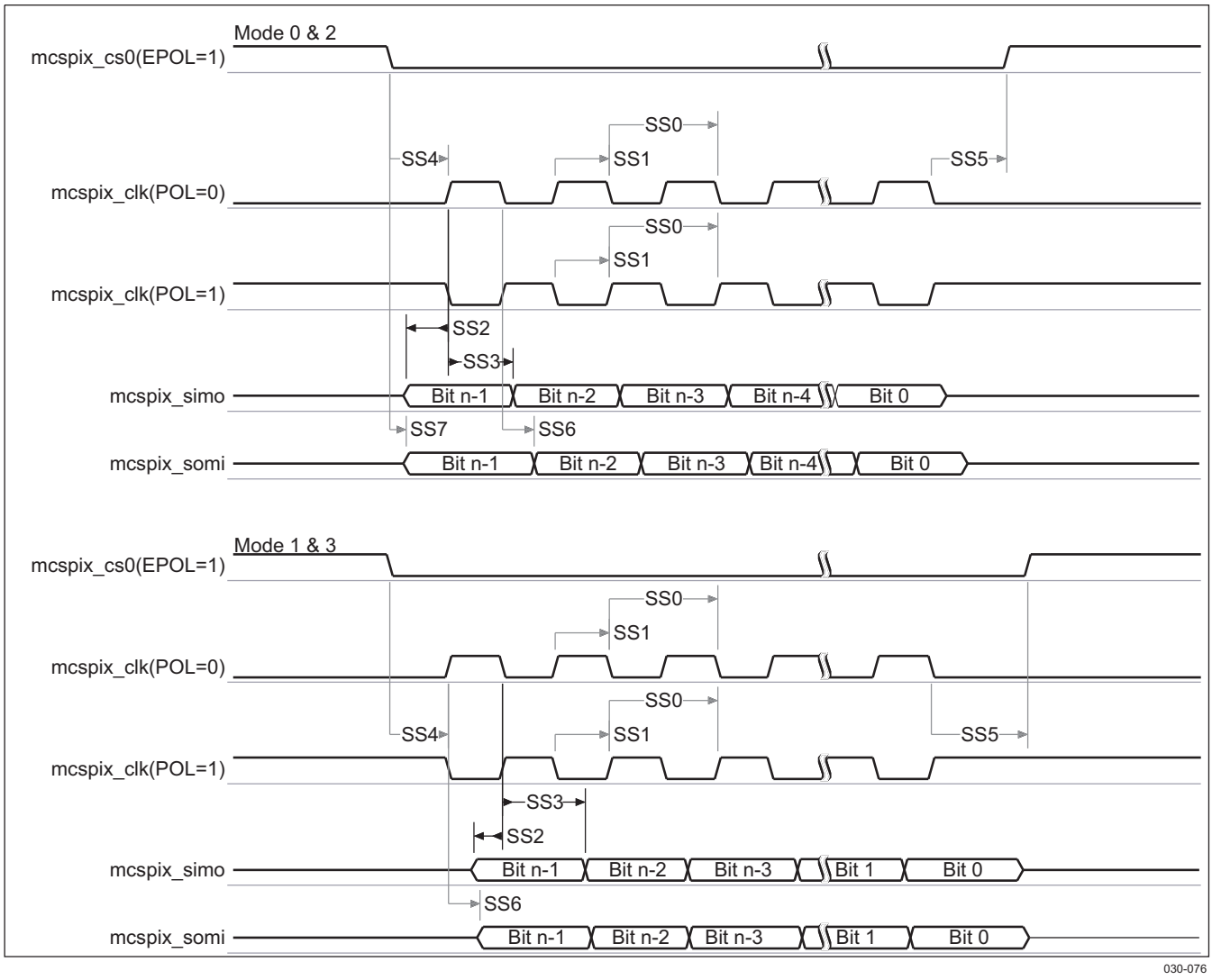

Figure 6-45. McSPI Interface Transmit and Receive in Slave Mode(1) (2)

(1) The active clock edge (rising or falling) on which mcspi_somi is driven and mcspi_simo data is latched is software configurable with the bit MSPI_CHCONFx[0] = PHA and the bit MSPI_CHCONFx[1] = POL.

(2) The polarity of mcspix_csi is software configurable with the bit MSPI_CHCONFx[6] = EPOL In mcspix, x is equal to 1, 2, 3, or 4.

6.6.2.2 McSPI in Master Mode

Table 6-94 and Table 6-95 assume testing over the recommended operating conditions.

Table 6-94. McSPI1, 2, and 4 Interface Timing Requirements – Master Mode(1) (2)

NO.	PARAMETER		1.8 V		3.3 V		UNIT
			MIN	MAX	MIN	MAX	
SM2	$t_{su(SOMIV-CLKAE)}$	Setup time, mcspix_somi valid before mcspix_clk active edge	2.56		4		ns
SM3	$t_{h(SOMIV-CLKAE)}$	Hold time, mcspix_somi valid after mcspix_clk active edge	2.93		4		ns

(1) The input timing requirements are given by considering a rise time and a fall time of 4 ns.
(2) In mcspix, x is equal to 1, 2, 3, or 4. In mcspix_csn, n is equal to 0, 1, 2, or 3 for x equal to 1, n is equal to 0 or 1 for x equal to 2 and 3. n is equal to 0 for x equal to 4.

Copyright © 2009–2014, Texas Instruments Incorporated

Table 6-95. McSPI1, 2, and 4 Interface Switching Characteristics – Master Mode(1) (2) (3)

NO.	PARAMETER			1.8 V		3.3 V		UNIT
				MIN	MAX	MIN	MAX	
SM0	$t_{c(CLK)}$	Cycle time, mcspix_clk		20.83		20.83		ns
	tj(CLK)	Cycle jitter(4), mcspix_clk		-200	200	-200	200	ps
SM1	$t_{w(CLK)}$	Pulse duration, mcspix_clk high or low		0.45P(5)	0.55P(5)	0.45P(5)	0.55P(5)	ns
SM4	$t_{d(CLKAE-SIMOV)}$	Delay time, mcspix_clk active edge to mcspix_simo shifted		-2.1	5	-3	6	ns
SM5	$t_{d(CSnA-CLKFE)}$	Delay time, mcspix_csi active to mcspix_clk first edge	Modes 1 and 3	A(6) - 3.2		A(6) - 3.0	6	ns
			Modes 0 and 2	B(7) - 3.2		B(7) -3.0	6	ns
SM6	$t_{d(CLKLE-CSnI)}$	Delay time, mcspix_clk last edge to mcspix_csi inactive	Modes 1 and 3	B(7) - 3.2		B(7) - 3.0		ns
			Modes 0 and 2	A(6) - 3.2		A(6) - 3.0		ns
SM7	$t_{d(CSnAE-SIMOV)}$	Delay time, mcspix_csi active edge to mcspix_simo shifted	Modes 0 and 2		5		5	ns

(1) Timings are given for a maximum load capacitance of 20 pF for spix_csn signals, 30 pF for spix_clk and spix_simo signals with x = 1 or 2, and 20 pF for spi4_clk and spi4_simo signals.
(2) In mcspix, x is equal to 1, 2, 3, or 4. In mcspix_csn, n is equal to 0, 1, 2, or 3 for x equal to 1, n is equal to 0 or 1 for x equal to 2 and 3. n is equal to 0 for x equal to 4.
(3) The polarity of mcspix_clk and the active edge (rising or falling) on which mcspix_simo is driven and mcspix_somi is latched is all software configurable.
(4) Maximum cycle jitter supported by mcspix_clk input clock.
(5) P = mcspix_clk clock period
(6) Case P = 20.8 ns, A = (TCS+0.5)*P (TCS is a bit field of MSPI_CHCONFx[26:25] register). Case P > 20.8 ns, A = TCS*P (TCS is a bitfield of MSPI_CHCONFx[26:25] register). For more information, see the *Device Multichannel Serial Port Interface (McSPI) Reference Guide* [SPRUFV6].
(7) B = TCS*P (TCS is a bit field of MSPI_CHCONFx[26:25] register). For more information, see the *Device Multichannel Serial Port Interface (McSPI) Reference Guide* [SPRUFV6].

Table 6-96 and Table 6-97 assume testing over the recommended operating conditions.

Table 6-96. McSPI 3 Interface Timing Requirements – Master Mode(1) (2)

NO.	PARAMETER		1.8 V		3.3 V		UNIT
			MIN	MAX	MIN	MAX	
SM2	$t_{su(SOMIV-CLKAE)}$	Setup time, mcspi3_somi valid before mcspi3_clk active edge	2.5		4		ns
SM3	$t_{h(SOMIV-CLKAE)}$	Hold time, mcspi3_somi valid after mcspi3_clk active edge	2.89		4		ns

(1) The input timing requirements are given by considering a rise time and a fall time of 4 ns.
(2) In mcspi3_csn, n is equal to 0 or 1. The polarity of mcspi3_clk and the active edge (rising or falling) on which mcspi3_simo is driven and mcspi3_somi is latched is all software configurable.

Copyright © 2009–2014, Texas Instruments Incorporated

Table 6-97. McSPI3 Interface Switching Characteristics – Master Mode(1) (2) (3)

NO.	PARAMETER			1.8 V		3.3 V		UNIT
				MIN	MAX	MIN	MAX	
SM0	$t_{c(CLK)}$	Cycle time, mcspix_clk		41.67		41.67		ns
	tj(CLK)	Cycle jitter(4)		-200	200	-200	200	ps
SM1	$t_{w(CLK)}$	Pulse duration, mcspix_clk high or low		0.45P(5)	0.55P(5)	0.45P(5)	0.55P(5)	ns
SM4	$t_{d(CLKAE-SIMOV)}$	Delay time, mcspix_clk active edge to mcspix_simo shifted		-2.1	11.3	-3		ns
SM5	$t_{d(CSnA-CLKFE)}$	Delay time, mcspix_csi active to mcspix_clk first edge	Modes 1 and 3	A(6) - 4.4		A(6) - 3.0	6	ns
			Modes 0 and 2	B(7) - 4.4		B(7) - 3.0	6	ns
SM6	$t_{d(CLKLE-CSnI)}$	Delay time, mcspix_clk last edge to mcspix_csi inactive	Modes 1 and 3	B(7) - 4.4		B(7) - 3.0		ns
			Modes 0 and 2	A(6) - 4.4		A(6) - 3.0		ns
SM7	$t_{d(CSnAE-SIMOV)}$	Delay time, mcspix_csi active edge to mcspix_simo shifted	Modes 0 and 2		11.3		5	ns

(1) The capacitive load is equivalent to 20 pF.
(2) In mcspi3_csn, n is equal to 0 or 1. The polarity of mcspi3_clk and the active edge (rising or falling) on which mcspi3_simo is driven and mcspi3_somi is latched are all software configurable.
(3) This timing applies to all configurations regardless of McSPI3_CLK polarity and which clock edges are used to drive output data and capture input data.
(4) Maximum cycle jitter supported by mcspix_clk input clock.
(5) P = mcspix_clk clock period.
(6) Case P = 20.8 ns, A = (TCS + 0.5)*P (TCS is a bit field of MSPI_CHCONFx[26:25] register). Case P > 20.8 ns, A = TCS*P (TCS is a bit field of MSPI_CHCONFx[26:25] register). For more information, see the *Device Multichannel Serial Port Interface (McSPI) Reference Guide* [SPRUFV6].
(7) B = TCS*P (TCS is a bit field of MSPI_CHCONFx[26:25] register). For more information, see the *Device Multichannel Serial Port Interface (McSPI) Reference Guide* [SPRUFV6].

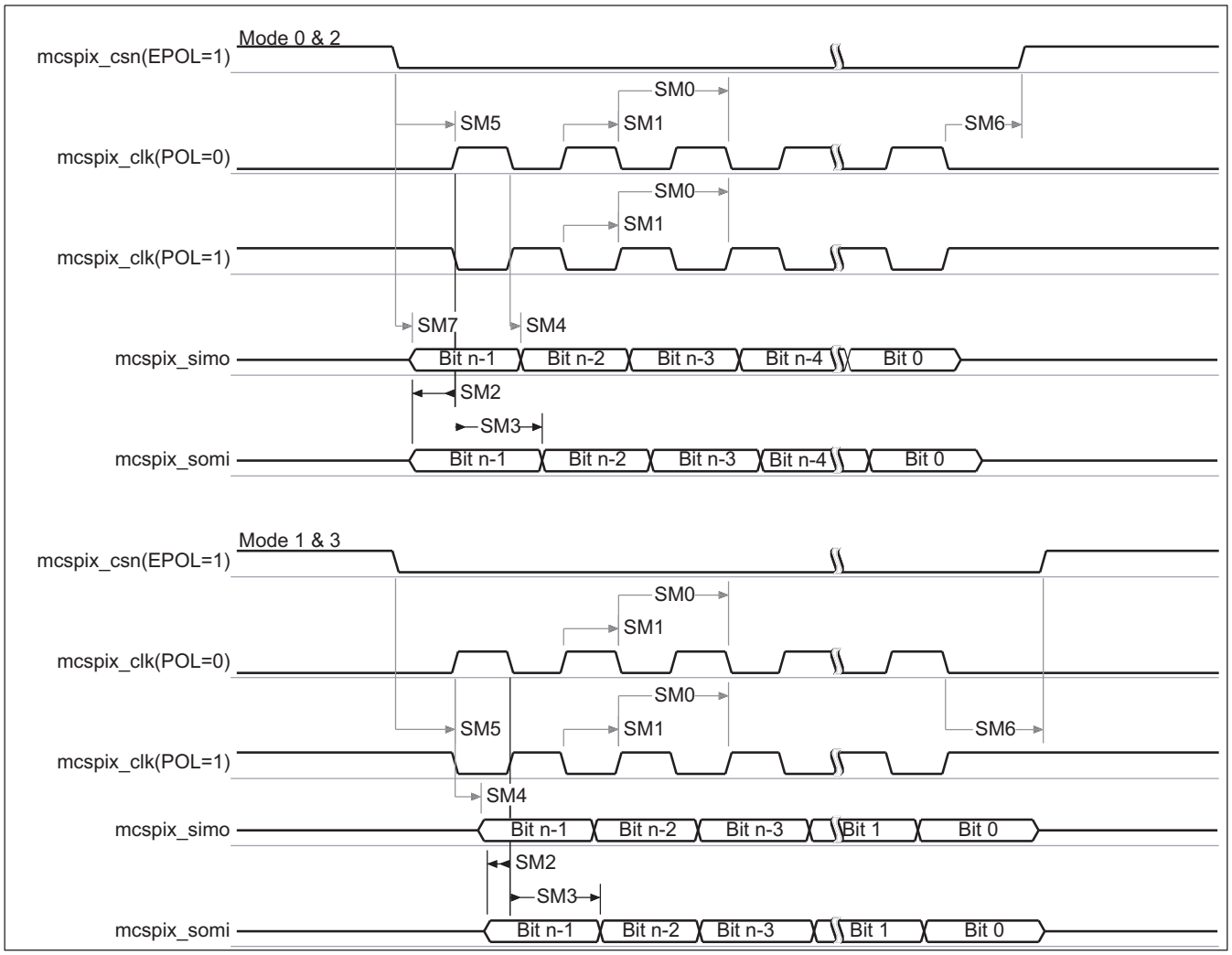

Figure 6-46. McSPI Interface Transmit and Receive in Master Mode(1) (2) (3)

(1) The active clock edge (rising or falling) on which mcspix_simo is driven and mcspi_somi data is latched is software configurable with the bit MSPI_CHCONFx[0] = PHA and the bit MSPI_CHCONFx[1] = POL.

(2) The polarity of mcspix_csi is software configurable with the bit MSPI_CHCONFx[6] = EPOL.

(3) In mcspix, x is equal to 1. In mcspix_csn, n is equal to 0, 1, 2, or 3.

Copyright © 2009–2014, Texas Instruments Incorporated

6.6.3 Multiport Full-Speed Universal Serial Bus (USB) Interface

The AM3517/05 microprocessor provides three USB ports working in full- and low-speed data transactions (up to 12Mbit/s).

Connected to either a serial link controller or a serial PHY (PHY interface modes) it supports:

- 6-pin (Tx: Dat/Se0 or Tx: Dp/Dm) unidirectional mode
- 4-pin bidirectional mode
- 3-pin bidirectional mode

6.6.3.1 Multiport Full-Speed Universal Serial Bus (USB) – Unidirectional Standard 6-pin Mode

Table 6-98 through Table 6-100 assume testing over the recommended operating conditions.

Table 6-98. Low-/Full-Speed USB Timing Conditions Unidirectional Standard 6-pin Mode

TIMING CONDITION PARAMETER		1.8V, 3.3V	UNIT
Input Conditions			
t_R	Input signal rise time	2.0	ns
t_F	Input signal fall time	2.0	ns
Output Conditions			
C_{LOAD}	Output load capacitance	15.0	pF

Table 6-99. Low-/Full-Speed USB Timing Requirements Unidirectional Standard 6-pin Mode

NO.	PARAMETER		1.8V, 3.3V		UNIT
			MIN	MAX	
FSU1	$t_{d(Vp,Vm)}$	Time duration, mmx_rxdp and mmx_rxdm low together during transition		14.0	ns
FSU2	$t_{d(Vp,Vm)}$	Time duration, mmx_rxdp and mmx_rxdm high together during transition		8.0	ns
FSU3	$t_{d(RCVU0)}$	Time duration, mmx_rrxcv undefine during a single end 0 (mmx_rxdp and mmx_rxdm low together)		14.0	ns
FSU4	$t_{d(RCVU1)}$	Time duration, mmx_rxrcv undefine during a single end 1 (mmx_rxdp and mmx_rxdm high together)		8.0	ns

Table 6-100. Low-/Full-Speed USB Switching Characteristics Unidirectional Standard 6-pin Mode

NO.	PARAMETER		1.8V, 3.3V		UNIT
			MIN	MAX	
FSU5	$t_{d(TXENL-DATV)}$	Delay time, mmx_txen_n low to mmx_txdat valid	81.8	84.8	ns
FSU6	$t_{d(TXENL-SE0V)}$	Delay time, mmx_txen_n low to mmx_txse0 valid	81.8	84.8	ns
FSU7	$t_{s(DAT-SE0)}$	Skew between mmx_txdat and mmx_txse0 transition		1.5	ns
FSU8	$t_{d(DATI-TXENH)}$	Delay time, mmx_txdat invalid to mmx_txen_n high	81.8		ns
FSU9	$t_{d(SE0I-TXENH)}$	Delay time, mmx_txse0 invalid to mmx_txen_n high	81.8		ns
	$t_{R(do)}$	Rise time, mmx_txen_n		4.0	ns
	$t_{F(do)}$	Fall time, mmx_txen_n		4.0	ns
	$t_{R(do)}$	Rise time, mmx_txdat		4.0	ns
	$t_{F(do)}$	Fall time, mmx_txdat		4.0	ns
	$t_{R(do)}$	Rise time, mmx_txse0		4.0	ns
	$t_{F(do)}$	Fall time, mmx_txse0		4.0	ns

Copyright © 2009–2014, Texas Instruments Incorporated

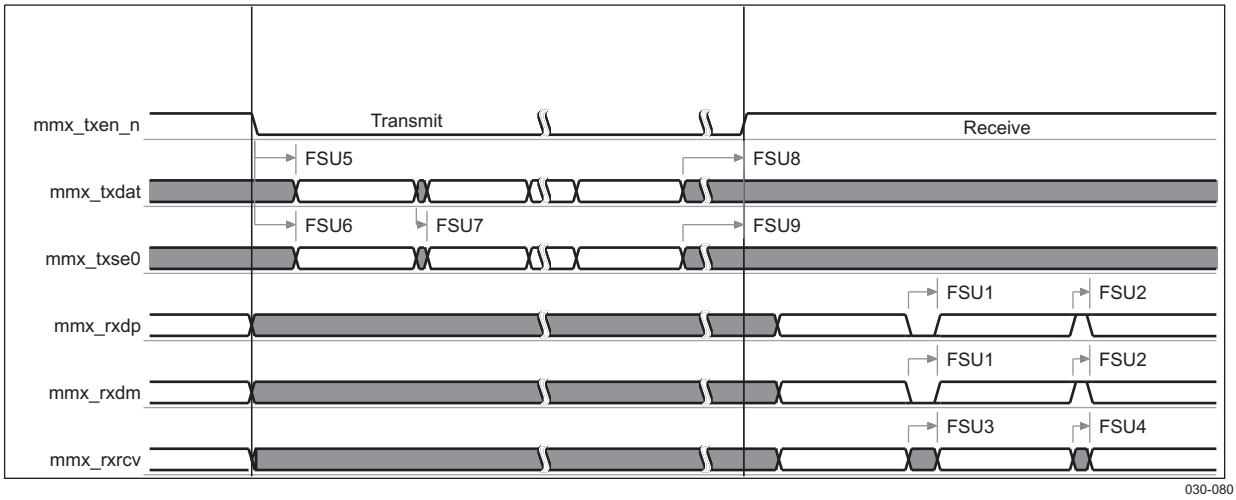

In mmx, x is equal to 0, 1, or 2.

Figure 6-47. Low-/Full-Speed USB Unidirectional Standard 6-pin Mode

6.6.3.2 Multiport Full-Speed Universal Serial Bus (USB) – Bidirectional Standard 4-pin Mode

Table 6-101 through Table 6-103 assume testing over the recommended operating conditions.

Table 6-101. Low-/Full-Speed USB Timing Conditions Bidirectional Standard 4-pin Mode

TIMING CONDITION PARAMETER		1.8V, 3.3V	UNIT
Input Conditions			
t_R	Input signal rise time	2.0	ns
t_F	Input signal fall time	2.0	ns
Output Conditions			
C_{LOAD}	Output load capacitance	15.0	pF

Table 6-102. Low-/Full-Speed USB Timing Requirements Bidirectional Standard 4-pin Mode

NO.	PARAMETER		1.8V, 3.3V		UNIT
			MIN	MAX	
FSU10	$t_{d(DAT,SE0)}$	Time duration, mmx_txdat and mmx_txse0 low together during transition		14.0	ns
FSU11	$t_{d(DAT,SE0)}$	Time duration, mmx_txdat and mmx_txse0 high together during transition		8.0	ns
FSU12	$t_{d(RCVU0)}$	Time duration, mmx_rrxcv undefine during a single end 0 (mmx_txdat and mmx_txse0 low together)		14.0	ns
FSU13	$t_{d(RCVU1)}$	Time duration, mmx_rxrcv undefine during a single end 1 (mmx_txdat and mmx_txse0 high together)		8.0	ns

Table 6-103. Low-/Full-Speed USB Switching Characteristics Bidirectional Standard 4-pin Mode

NO.	PARAMETER		1.8V, 3.3V		UNIT
			MIN	MAX	
FSU14	$t_{d(TXENL-DATV)}$	Delay time, mmx_txen_n low to mmx_txdat valid	81.8	84.8	ns
FSU15	$t_{d(TXENL-SE0V)}$	Delay time, mmx_txen_n low to mmx_txse0 valid	81.8	84.8	ns
FSU16	$t_{s(DAT-SE0)}$	Skew between mmx_txdat and mmx_txse0 transition		1.5	ns
FSU17	$t_{d(DATV-TXENH)}$	Delay time, mmx_txdat invalid before mmx_txen_n high	81.8		ns
FSU18	$t_{d(SE0V-TXENH)}$	Delay time, mmx_txse0 invalid before mmx_txen_n high	81.8		ns
	$t_{R(txen)}$	Rise time, mmx_txen_n		4.0	ns

Copyright © 2009–2014, Texas Instruments Incorporated

Table 6-103. Low-/Full-Speed USB Switching Characteristics Bidirectional Standard 4-pin Mode (continued)

NO.	PARAMETER		1.8V, 3.3V		UNIT
			MIN	MAX	
	$t_{F(txen)}$	Fall time, mmx_txen_n		4.0	ns
	$t_{R(dat)}$	Rise time, mmx_txdat		4.0	ns
	$t_{F(dat)}$	Fall time, mmx_txdat		4.0	ns
	$t_{R(se0)}$	Rise time, mmx_txse0		4.0	ns
	$t_{F(se0)}$	Fall time, mmx_txse0		4.0	ns

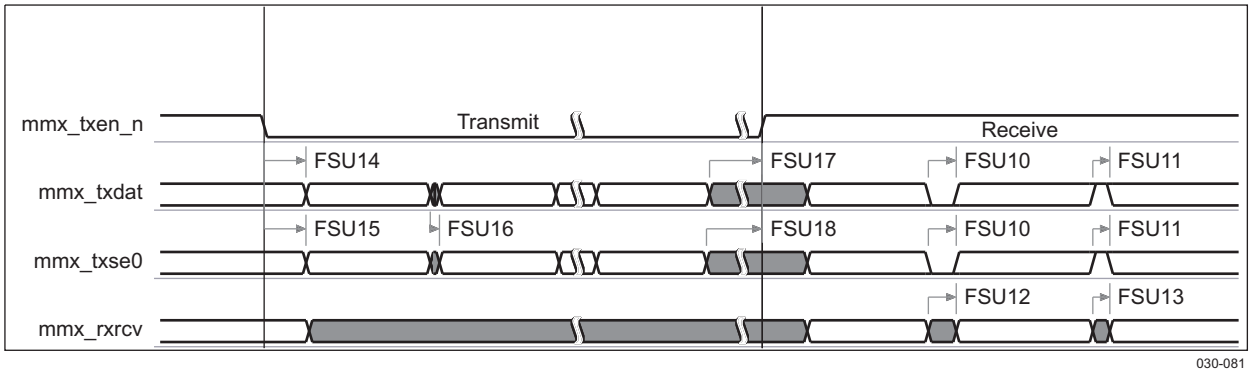

In mmx, x is equal to 0, 1, or 2.

Figure 6-48. Low-/Full-Speed USB Bidirectional Standard 4-pin Mode

6.6.3.3 Multiport Full-Speed Universal Serial Bus (USB) – Bidirectional Standard 3-pin Mode

Table 6-104 through Table 6-106 assume testing over the recommended operating conditions.

Table 6-104. Low-/Full-Speed USB Timing Conditions Bidirectional Standard 3-pin Mode

TIMING CONDITION PARAMETER		1.8V, 3.3V	UNIT
Input Conditions			
t_R	Input signal rise time	2.0	ns
t_F	Input signal fall time	2.0	ns
Output Conditions			
C_{LOAD}	Output load capacitance	15.0	pF

Table 6-105. Low-/Full-Speed USB Timing Requirements Bidirectional Standard 3-pin Mode

NO.	PARAMETER		1.8V, 3.3V		UNIT
			MIN	MAX	
FSU19	$t_{d(DAT,SE0)}$	Time duration, mmx_txdat and mmx_txse0 low together during transition		14.0	ns
FSU20	$t_{d(DAT,SE0)}$	Time duration, mmx_tsdat and mmx_txse0 high together during transition		8.0	ns

Table 6-106. Low-/Full-Speed USB Switching Characteristics Bidirectional Standard 3-pin Mode

NO.	PARAMETER		1.8V, 3.3V		UNIT
			MIN	MAX	
FSU21	$t_{d(TXENL-DATV)}$	Delay time, mmx_txen_n low to mmx_txdat valid	81.8	84.8	ns
FSU22	$t_{d(TXENL-SE0V)}$	Delay time, mmx_txen_n low to mmx_txse0 valid	81.8	84.8	ns
FSU23	$t_{s(DAT-SE0)}$	Skew between mmx_txdat and mmx_txse0 transition		1.5	ns

Copyright © 2009–2014, Texas Instruments Incorporated

Table 6-106. Low-/Full-Speed USB Switching Characteristics Bidirectional Standard 3-pin Mode (continued)

NO.	PARAMETER		1.8V, 3.3V		UNIT
			MIN	MAX	
FSU24	$t_{d(DATI-TXENH)}$	Delay time, mmx_txdat invalid to mmx_txen_n high	81.8		ns
FSU25	$t_{d(SE0I-TXENH)}$	Delay time, mmx_txse0 invalid to mmx_txen_n high	81.8		ns
	$t_{R(do)}$	Rise time, mmx_txen_n		4.0	ns
	$t_{F(do)}$	Fall time, mmx_txen_n		4.0	ns
	$t_{R(do)}$	Rise time, mmx_txdat		4.0	ns
	$t_{F(do)}$	Fall time, mmx_txdat		4.0	ns
	$t_{R(do)}$	Rise time, mmx_txse0		4.0	ns
	$t_{F(do)}$	Fall time, mmx_txse0		4.0	ns

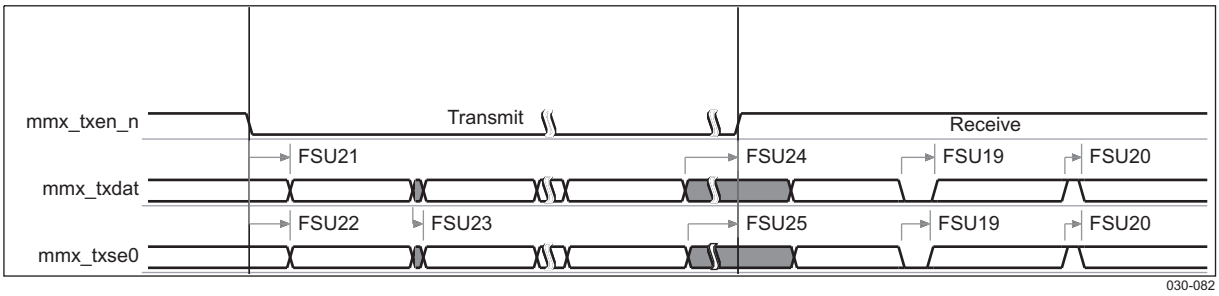

In mmx, x is equal to 0, 1, or 2.

Figure 6-49. Low-/Full-Speed USB Bidirectional Standard 3-pin Mode

6.6.4 Multiport High-Speed Universal Serial Bus (USB) Timing

In addition to the full-speed USB controller, a high-speed (HS) USB controller is instantiated inside the AM3517/05. It allows high-speed transactions (up to 480 Mbit/s) on the USB ports 1 and 2.

- Port 1 and port 2:
  - 12-bit master mode (SDR)

6.6.4.1 High-Speed Universal Serial Bus (USB) on Ports 1 and 2 12-bit Master Mode

Table 6-107 through Table 6-109 assume testing over the recommended operating conditions.

Table 6-107. High-Speed USB Timing Conditions 12-bit Master Mode

TIMING CONDITION PARAMETER		1.8V, 3.3V	UNIT
Input Conditions			
t_R	Input signal rise time	2	ns
t_F	Input signal fall time	2	ns
Output Conditions			
C_{LOAD}	Output load capacitance	3	pF

Table 6-108. High-Speed USB Timing Requirements 12-bit Master Mode(1)

NO.	PARAMETER		1.8V, 3.3V		UNIT
			MIN	MAX	
HSU3	$t_{s(DIRV-CLKH)}$	Setup time, hsusbx_dir valid before hsusbx_clk rising edge	7.5		ns
	$t_{s(NXTV-CLKH)}$	Setup time, hsusbx_nxt valid before hsusbx_clk rising edge	7.5		ns
HSU4	$t_{h(CLKH-DIRIV)}$	Hold time, hsusbx_dir valid after hsusbx_clk rising edge	0.2		ns

(1) In hsusbx, x is equal to 1 or 2.

Copyright © 2009–2014, Texas Instruments Incorporated

Table 6-108. High-Speed USB Timing Requirements 12-bit Master Mode[1] (continued)

NO.	PARAMETER		1.8V, 3.3V		UNIT
			MIN	MAX	
	$t_{h(CLKH-NXT/IV)}$	Hold time, hsusbx_nxt valid after hsusbx_clk rising edge	0.2		ns
HSU5	$t_{s(DATAV-CLKH)}$	Setup time, hsusbx_data[0:7] valid before hsusbx_clk rising edge	7.5		ns
HSU6	$t_{h(CLKH-DATIV)}$	Hold time, hsusbx_data[0:7] valid after hsusbx_clk rising edge	0.2		ns

Table 6-109. High-Speed USB Switching Characteristics 12-bit Master Mode[1]

N O.	PARAMETER		1.8V, 3.3V		UNIT
			MIN	MAX	
HSU0	$f_{p(CLK)}$	hsusbx_clk clock frequency		60	MHz
	$t_{j(CLK)}$	Jitter standard deviation[2], hsusbx_clk		200	ps
HSU1	$t_{d(CLKH-STPV)}$	Delay time, hsusbx_clk high to output hsusbx_stp valid		13	ns
	$t_{d(CLKH-STPIV)}$	Delay time, hsusbx_clk high to output hsusbx_stp invalid	2		ns
HSU2	$t_{d(CLKH-DV)}$	Delay time, hsusbx_clk high to output hsusbx_data[0:7] valid		13	ns
	$t_{d(CLKH-DIV)}$	Delay time, hsusbx_clk high to output hsusbx_data[0:7] invalid	2		ns
	$t_{R(do)}$	Rise time, output signals		2	ns
	$t_{F(do)}$	Fall time, output signals		2	ns

(1) In hsusbx, x is equal to 1 or 2.
(2) The jitter probability density can be approximated by a Gaussian function.

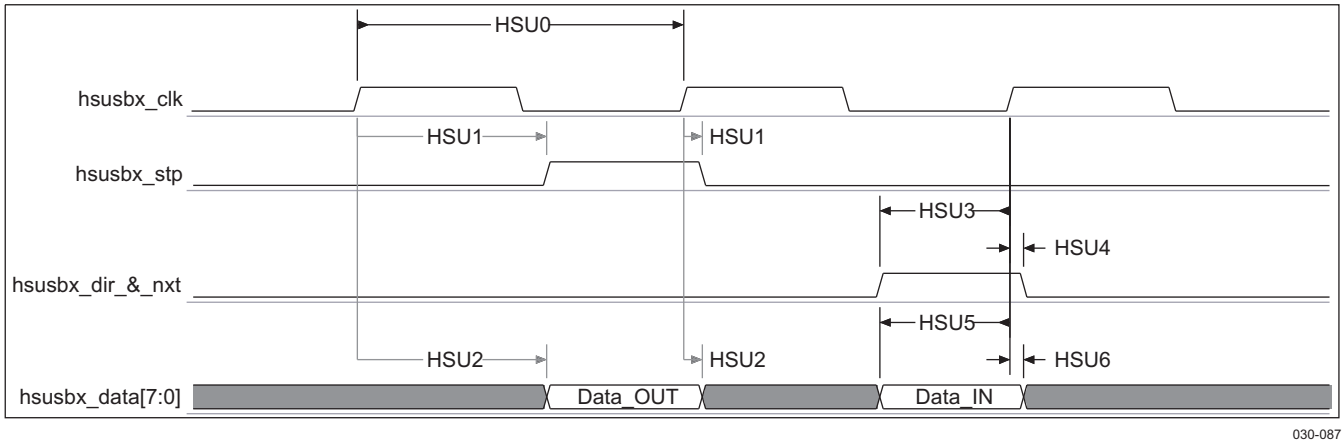

In hsusbx, x is equal to 1 or 2.

Figure 6-50. High-Speed USB 12-bit Master Mode

6.6.5 USB0 OTG (USB2.0 OTG)

The AM3517/05 USB2.0 peripheral supports the following features:

- USB 2.0 peripheral at speeds high speed (HS: 480 Mb/s) and full speed (FS: 12 Mb/s)
- USB 2.0 host at speeds HS, FS, and low speed (LS: 1.5 Mb/s)
- All transfer modes (control, bulk, interrupt, and isochronous)
- 16 Transmit (TX) and 16 Receive (RX) endpoints in addition to endpoint 0
- FIFO RAM
  - 32K endpoint
  - Programmable size
- Integrated USB 2.0 High Speed PHY
- Connects to a standard Charge Pump for VBUS 5 V generation
- RNDIS mode for accelerating RNDIS type protocols using short packet termination over USB

6.6.5.1 USB OTG Electrical Parameters

The USB OTG electrical parameters meet or exceed those specified in the following documents which can be obtained from the USB Implementers Forum:

- *Universal Serial Bus Specification, Revision 2.0, April 27, 2000*
- *On-The-Go Supplement to the USB 2.0 Specification, Revision 1.3, December 5, 2006*
- *Engineering Change Notice "Pull-up/pull-down resistors", Universal Serial Bus Specification Revision 2.0*

For additional information related to USB OTG electrical parameters, please see the respective documents on the USB Implementers Forum web site (http://www.usb.org).

Copyright © 2009–2014, Texas Instruments Incorporated

6.6.6 High-End Controller Area Network Controller (HECC) Timing

The AM3517/05 device has a High-End Controller Area Network Controller (HECC). The HECC uses established protocol to communicate serially with other controllers in harsh environments. The HECC is fully compliant with the Controller Area Network (CAN) protocol, version 2.0B.

Key features of the HECC include the following:

- CAN, version 2.0B compliant
- 32 RX/TX message objects
- 32 receive identifier masks
- Programmable wake-up on bus activity
- Programmable interrupt scheme
- Automatic reply to a remote request
- Automatic re-transmission in case of error or loss of arbitration
- Protection against reception of a new message
- 32-bit time stamp
- Local network time counter
- Programmable priority register for each message
- Programmable transmission and reception time-out
- HECC/SCC mode of operation
- Standard-Extended Identifier
- Self-test mode

6.6.6.1 HECC Timing Requirements

Table 6-110. Timing Requirements for HECC Receive (see Figure 6-51)

NO.			1.8 V, 3.3 V		UNIT
			MIN	MAX	
1	$f_{(baud)}$	Maximum programmable baud rate		1	Mbps
2	$t_{w(HECC_RX)}$	Pulse duration, receive data bit	H-1(1)	H+3(1)	ns

(1) These values are relative to H (where H = 1/(baud rate).

6.6.6.2 HECC Switching Characteristics

Table 6-111. Switching Characteristics Over Recommended Operating Conditions for HECC Transmit (see Figure 6-51)

NO.	PARAMETER		1.8 V, 3.3 V		UNIT
			MIN	MAX	
3	$f_{(baud)}$	Maximum programmable baud rate		1	Mbps
4	$t_{w(HECC_TX)}$	Pulse duration, transmit data bit	H-1(1)	H+3(1)	ns

(1) These values are relative to H (where H = 1/(baud rate).

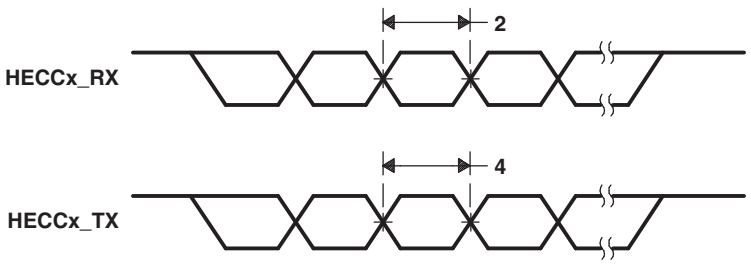

Figure 6-51. HECC Transmit/Receive Timing

6.6.7 Ethernet Media Access Controller (EMAC)

The Ethernet Media Access Controller (EMAC) provides an efficient interface between the AM3517/05 and the network. The EMAC supports both 10Base-T and 100Base-TX, or 10 Mbits/second (Mbps) and 100 Mbps in either half- or full-duplex mode, with hardware flow control and quality of service (QOS) support.

The EMAC controls the flow of packet data from the AM3517/05 device to the PHY. The MDIO module controls PHY configuration and status monitoring.

Both the EMAC and the MDIO modules interface to the AM3517/05 device through a custom interface that allows efficient data transmission and reception. This custom interface is referred to as the EMAC control module, and is considered integral to the EMAC/MDIO peripheral. The control module is also used to multiplex and control interrupts.

6.6.7.1 EMAC Electrical Data/ Timing

Table 6-112 through Table 6-114 assume testing over the recommended operating conditions.

Table 6-112. RMII Input Timing Requirements

NO.	PARAMETER		1.8V, 3.3V			
			MIN	TYP	MAX	UNIT
	fc(REFCLK)	Frequency, REF_CLK		50		MHz
	ft (REFCLK)	Frequency stability, REF_CLK			+/-50	ppm
1	tc(REFCLK)	Cycle Time, REF_CLK		20		ns
2	tw(REFCLKH)	Pulse Width, REF_CLK High	7		13	ns
3	tw(REFCLKL)	Pulse Width, REF_CLK Low	7		13	ns
6	tsu(RXD-REFCLK)	Input Setup Time, RXD Valid before REF_CLK High	4			ns
7	th(REFCLK-RXD)	Input Hold Time, RXD Valid after REF_CLK High	2			ns
8	tsu(CRSDV-REFCLK)	Input Setup Time, CRSDV Valid before REF_CLK High	4			ns
9	th(REFCLK-CRSDV)	Input Hold Time, CRSDV Valid after REF_CLK High	2			ns
10	tsu(RXER-REFCLK)	Input Setup Time, RXER Valid before REF_CLK High	4			ns
11	th(REFCLKR-RXER)	Input Hold Time, RXER Valid after REF_CLK High	2			ns

Table 6-113. RMII Timing Conditions

TIMING CONDITION PARAMETER		1.8V, 3.3V		UNIT
Input Conditions		MIN	MAX	
t_R	Input signal rise time	1	5	ns
t_F	Input signal fall time	1	5	ns
Output Conditions				
C_{LOAD}	Output load capacitance		5.5	pF

Table 6-114. RMII Output Switching Characteristics

NO.	PARAMETER		1.8V, 3.3V			
			MIN	TYP	MAX	UNIT
4	td(REFCLK-TXD)	Output Delay Time, REF_CLK High to TXD Valid	2.5		13	ns
5	td(REFCLK-TXEN)	Output Delay Time, REF_CLK High to TXEN Valid	2.5		13	ns

Copyright © 2009–2014, Texas Instruments Incorporated

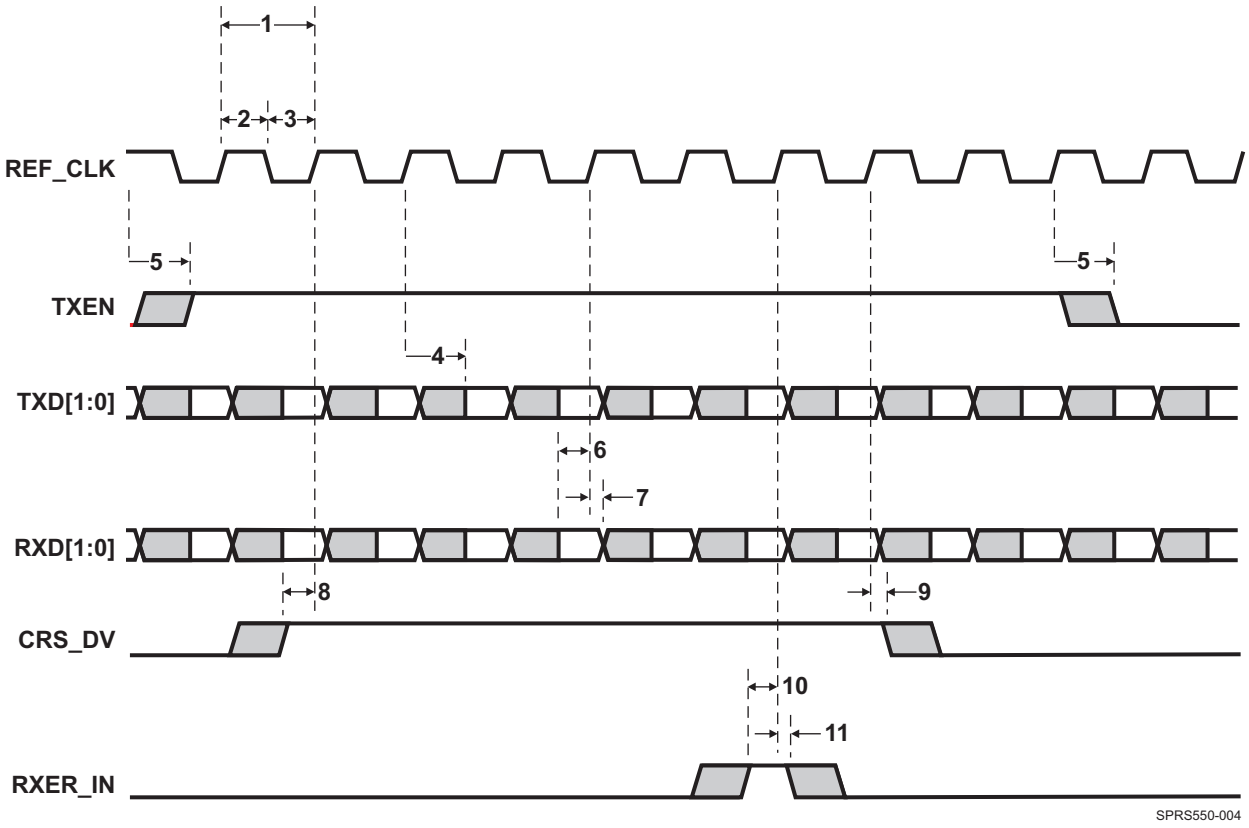

Figure 6-52. RMII Timing Diagram

6.6.8 Management Data Input/Output (MDIO)

The Management Data Input/Output (MDIO) module continuously polls all 32 MDIO addresses in order to enumerate all PHY devices in the system.

The Management Data Input/Output (MDIO) module implements the 802.3 serial management interface to interrogate and control Ethernet PHY(s) using a shared two-wire bus. Host software uses the MDIO module to configure the auto-negotiation parameters of each PHY attached to the EMAC, retrieve the negotiation results, and configure required parameters in the EMAC module for correct operation. The module is designed to allow almost transparent operation of the MDIO interface, with very little maintenance from the core processor. Only one PHY may be connected at any given time.

6.6.8.1 Management Data Input/Output (MDIO) Electrical Data/Timing

Table 6-115. Timing Requirements for MDIO Input (see Figure 6-53 and Figure 6-54)

No.	PARAMETER		MIN	MAX	UNIT
1	$t_{c(MD_CLK)}$	Cycle time, MD_CLK	400		ns
4	$t_{su(MDIO-MDCLKH)}$	Setup time, MDIO data input valid before MD_CLK high	20		ns
5	$t_{h(MDCLKH-MDIO)}$	Hold time, MDIO data input valid after MDCLK high	0		ns

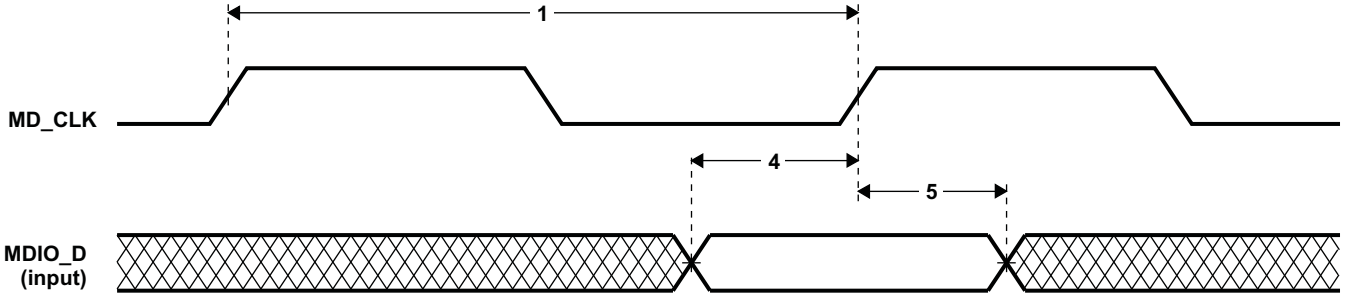

Figure 6-53. MDIO Input Timing

Table 6-116. Switching Characteristics Over Recommended Operating Conditions for MDIO Output (see Figure 6-54)

No.	PARAMETER		MIN	MAX	UNIT
7	$t_{d(MDCLKL-MDIO)}$	Delay time, MDCLK low to MDIO data output valid	0	100	ns

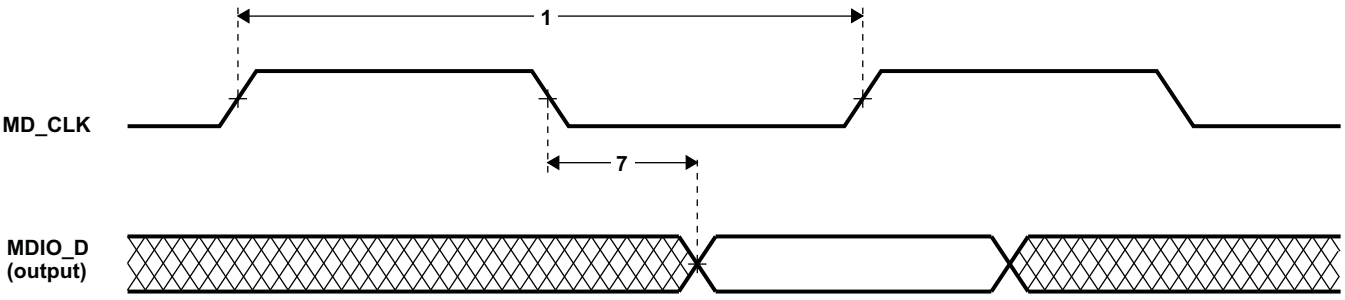

Figure 6-54. MDIO Output Timing

6.6.9 Universal Asynchronous Receiver/Transmitter (UART)

The AM3517/05 has four UARTs (one with Infrared Data Association [IrDA] and Consumer Infrared [CIR] modes).

Copyright © 2009–2014, Texas Instruments Incorporated

Table 6-117. Timing Requirements for UARTx Receive(1)

NO.			1.8V, 3.3V		UNIT
			MIN	MAX	
4	$t_{w(URXDB)}$	Pulse duration, receive data bit (RXDn)	.96U	1.05U	ns
5	$t_{w(URXSB)}$	Pulse duration, receive start bit	.96U	1.05U	ns

(1) U = UART baud time = 1/programmed baud rate.

Table 6-118. Switching Characteristics Over Recommended Operating Conditions for UARTx Transmit(1)

NO.	PARAMETER		1.8V, 3.3V		UNIT
			MIN	MAX	
1	$f_{(baud)}$	UART0 Maximum programmable baud rate $f_{(baud_15)}$		5	mbps
		UART0 Maximum programmable baud rate $f_{(baud_30)}$		0.23	
		UART0 Maximum programmable baud rate $f_{(baud_100)}$		0.115	
2	$t_{w(UTXDB)}$	Pulse duration, transmit data bit, 15/30/100 pF	U - 2	U + 2	ns
3	$t_{w(UTXSB)}$	Pulse duration, transmit start bit, 15/30/100 pF	U - 2	U + 2	ns

(1) U = UART baud time = 1/programmed baud rate.

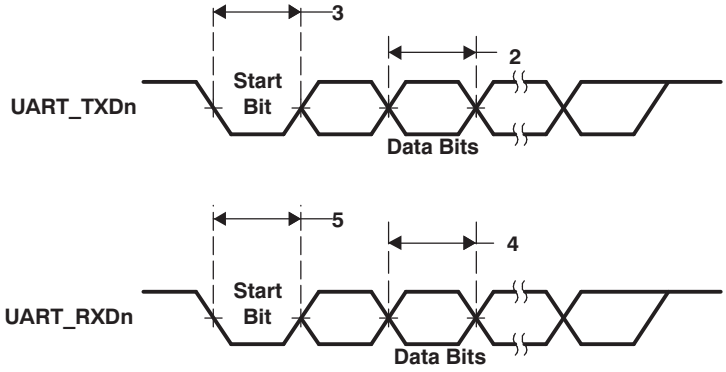

Figure 6-55. UART Transmit/Receive Timing

6.6.9.1 UART IrDA Interface

The IrDA module can operate in three different modes:

- Slow infrared (SIR) (≤115.2 Kbits/s)
- Medium infrared (MIR) (0.576 Mbits/s and 1.152 Mbits/s)
- Fast infrared (FIR) (4 Mbits/s)

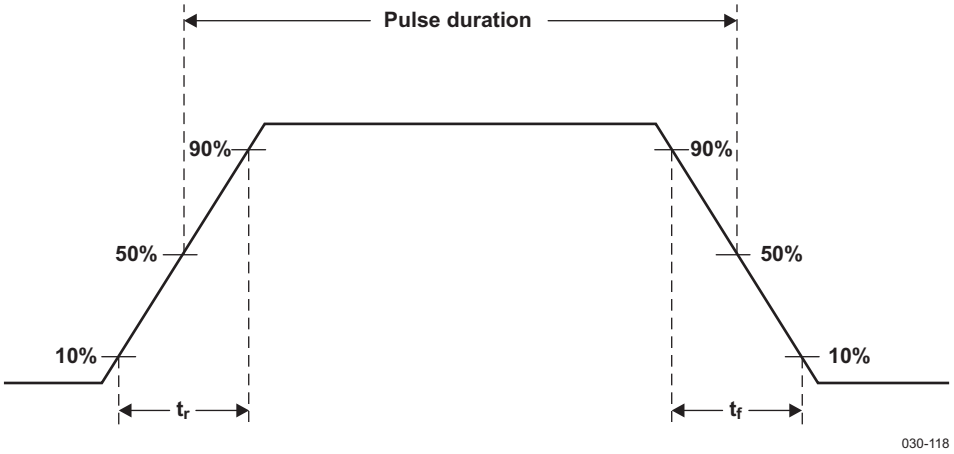

Figure 6-56. UART IrDA Pulse Parameters

6.6.9.1.1 IrDA—Receive Mode

Table 6-119. UART IrDA—Signaling Rate and Pulse Duration—Receive Mode

SIGNALING RATE	ELECTRICAL PULSE DURATION			UNIT
	MIN	NOMINAL	MAX	
SIR				
2.4 Kbit/s	1.41	78.1	88.55	µs
9.6 Kbit/s	1.41	19.5	22.13	µs
19.2 Kbit/s	1.41	9.75	11.07	µs
38.4 Kbit/s	1.41	4.87	5.96	µs
57.6 Kbit/s	1.41	3.25	4.34	µs
115.2 Kbit/s	1.41	1.62	2.23	µs
MIR				
0.576 Mbit/s	297.2	416	518.8	ns
1.152 Mbit/s	149.6	208	258.4	ns
FIR				
4.0 Mbit/s (Single pulse)	67	125	164	ns
4.0 Mbit/s (Double pulse)	190	250	289	ns

Table 6-120. UART IrDA—Rise and Fall Time—Receive Mode

	PARAMETER	MAX	UNIT
t_R	Rising time, uart3_rx_irrx	200	ns
t_F	Falling time, uart3_rx_irrx	200	ns

Copyright © 2009–2014, Texas Instruments Incorporated

6.6.9.1.2 IrDA—Transmit Mode

Table 6-121. UART IrDA—Signaling Rate and Pulse Duration—Transmit Mode

SIGNALING RATE	ELECTRICAL PULSE DURATION			UNIT
	MIN	NOMINAL	MAX	
SIR				
2.4 Kbit/s	78.1	78.1	78.1	µs
9.6 Kbit/s	19.5	19.5	19.5	µs
19.2 Kbit/s	9.75	9.75	9.75	µs
38.4 Kbit/s	4.87	4.87	4.87	µs
57.6 Kbit/s	3.25	3.25	3.25	µs
115.2 Kbit/s	1.62	1.62	1.62	µs
MIR				
0.576 Mbit/s	414	416	419	ns
1.152 Mbit/s	206	208	211	ns
FIR				
4.0 Mbit/s (Single pulse)	123	125	128	ns
4.0 Mbit/s (Double pulse)	248	250	253	ns

6.6.10 HDQ / 1-Wire Interfaces

This module is intended to work with both the HDQ and the 1-Wire protocols. The protocols use a single wire to communicate between the master and the slave. The protocols employ an asynchronous return to 1 mechanism where, after any command, the line is pulled high.

6.6.10.1 HDQ Protocol

Table 6-122 and Table 6-123 assume testing over the recommended operating conditions (see Figure 6-57 through Figure 6-60).

Table 6-122. HDQ Timing Requirements

PARAMETER	DESCRIPTION	MIN	MAX	UNIT
t_{CYCD}	Bit window	253		s
t_{HW1}	Reads 1		68	
t_{HW0}	Reads 0	180		
t_{RSPS}	Command to host respond time(1)			

(1) Defined by software.

Table 6-123. HDQ Switching Characteristics

PARAMETER	DESCRIPTION	MIN	TYP	MAX	UNIT
t_B	Break timing		193		s
t_{BR}	Break recovery		63		
t_{CYCH}	Bit window		253		
t_{DW1}	Sends1 (write)		1.3		
t_{DW0}	Sends0 (write)		101		

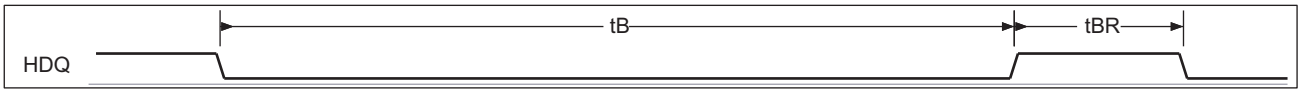

Figure 6-57. HDQ Break (Reset) Timing

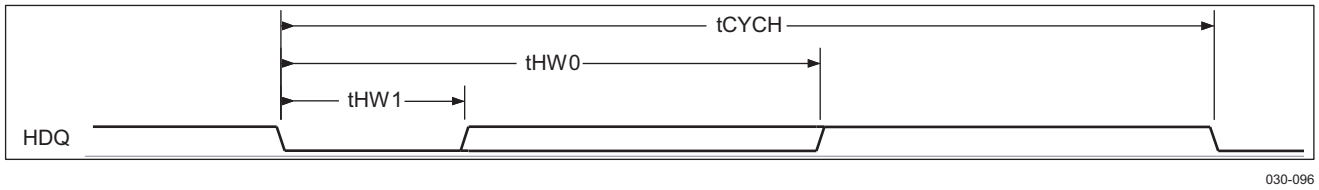

Figure 6-58. HDQ Read Bit Timing (Data)

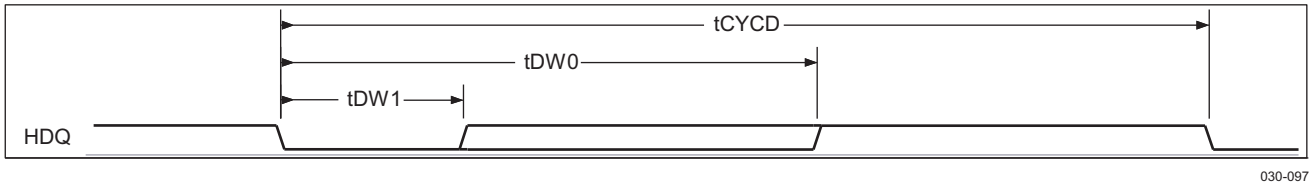

Figure 6-59. HDQ Write Bit Timing (Command/Address or Data)

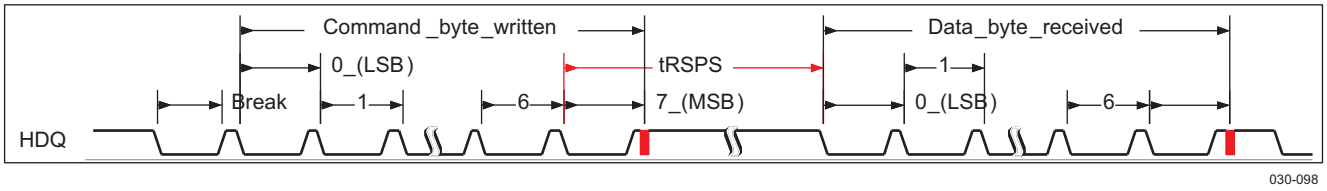

Figure 6-60. HDQ Communication Timing

6.6.10.2 1-Wire Protocol

Table 6-124 and Table 6-125 assume testing over the recommended operating conditions (see Figure 6-61 through Figure 6-63).

Table 6-124. 1-Wire Timing Requirements

PARAMETER	DESCRIPTION	MIN	MAX	UNIT
t_{PDH}	Presence pulse delay high		68	s
t_{PDL}	Presence pulse delay low	68 t_{PDH}		
$t_{RDV} + t_{REL}$	Read bit-zero time		102	

Table 6-125. 1-Wire Switching Characteristics

PARAMETER	DESCRIPTION	MIN	TYP	MAX	UNIT
t_{RSTL}	Reset time low		484		s
t_{RSTH}	Reset time high		484		
t_{SLOT}	Write bit cycle time		102		
t_{LOW1}	Write bit-one time		1.3		
t_{LOW0}	Write bit-zero time		101		
t_{REC}	Recovery time		134		
t_{LOWR}	Read bit strobe time		13		

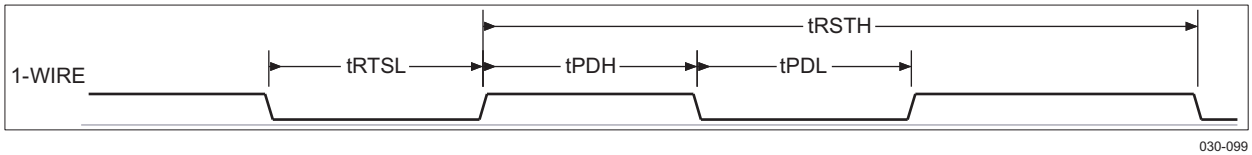

Figure 6-61. 1-Wire Break (Reset) Timing

Copyright © 2009–2014, Texas Instruments Incorporated

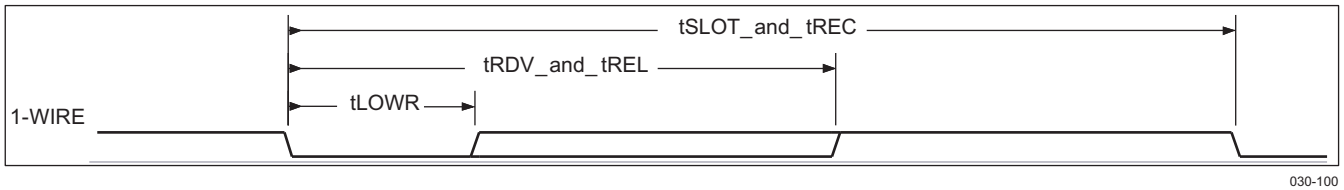

Figure 6-62. 1-Wire Read Bit Timing (Data)

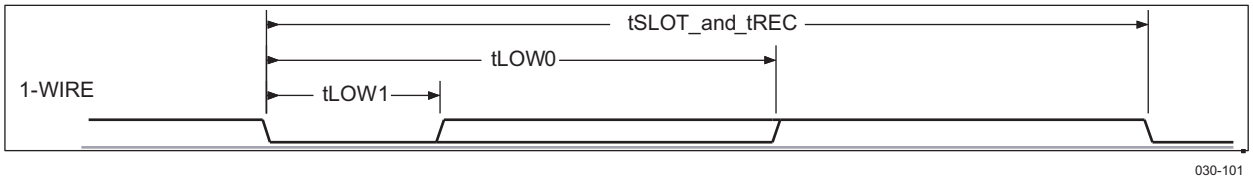

Figure 6-63. 1-Wire Write Bit Timing (Command/Address or Data)

6.6.11 I²C Interface

The multimaster I²C peripheral provides an interface between two or more devices via an I²C serial bus. The I²C controller supports the multimaster mode which allows more than one device capable of controlling the bus to be connected to it. Each I²C device is recognized by a unique address and can operate as either transmitter or receiver, according to the function of the device. In addition to being a transmitter or receiver, a device connected to the I²C bus can also be considered as master or slave when performing data transfers. This data transfer is carried out via two serial bidirectional wires:

- An SDA data line
- An SCL clock line

The following sections illustrate the data transfer is in master or slave configuration with 7-bit addressing format. The I²C interface is compliant with Philips I²C specification version 2.1. It supports standard mode (up to 100K bits/s), fast mode (up to 400K bits/s) and high-speed mode (up to 3.4Mb/s) .

6.6.11.1 I²C Standard/Fast-Speed Mode

Table 6-126. I²C Standard/Fast-Speed Mode Timings

NO.	PARAMETER(1)		1.8V, 3.3-V				UNIT
			STANDARD MODE		FAST MODE		
			MIN	MAX	MIN	MAX	
	f_{SCL}	Clock Frequency, i2cX_scl		100		400	kHz
I1	$t_{w(SCLH)}$	Pulse Duration, i2cX_scl high	4		0.6		s
I2	$t_{w(SCLL)}$	Pulse Duration, i2cX_scl low	4.7		1.3		s
I3	$t_{su(SDAV-SCLH)}$	Setup time, i2cX_sda valid before i2cX_scl active level	250		100(2)		ns
I4	$t_{h(SCLHSDAV)}$	Hold time, i2cX_sda valid after i2cX_scl active level		3.45(3)		0.9(3)	s
I5	$t_{su(SDAL-SCLH)}$	Setup time, i2cX_scl high after i2cX_sda low (for a START(4) condition or a repeated START condition)	4.7		0.6		s
I6	$t_{h(SCLHSDAH)}$	Hold time, i2cX_sda low level after i2cX_scl high level (STOP condition)	4		0.6		s
I7	$t_{h(SCLHRSTART)}$	Hold time, i2cX_sda low level after i2cX_scl high level (for a repeated START condition)	4		0.6		s
I8	$t_{w(SDAH)}$	Pulse duration, i2cX_sda high between STOP and START conditions	4.7		1.3		s
	$t_{R(SCL)}$	Rise time, i2cX_scl		1000		300	ns
	$t_{F(SCL)}$	Fall time, i2cX_scl		300		300	ns
	$t_{R(SDA)}$	Rise time, i2cX_sda		1000		300	ns
	$t_{F(SDA)}$	Fall time, i2cX_sda		300		300	ns
	CB	Capacitive load for each bus line		60		60	pF

(1) In i2cX, X is equal to 1, 2, or 3.
(2) A fast-mode I²C-bus device can be used in a standard-mode I²C-bus system, but the requirement $t_{su(SDAV-SCLH)}$ 250 ns must then be met. This is automatically the case if the device does not stretch the low period of the i2cx_scl. If such a device does stretch the low period of the i2cx_scl, it must output the next data bit to the i2cx_sda line $t_{r(SDA)}$ max + $t_{su(SDAV-SCLH)}$ = 1000 + 250 = 1250 ns (according to the standard-mode I²C-bus specification) before the i2cx_scl line is released.
(3) The maximum $t_{h(SCLH-SDA)}$ has only to be met if the device does not stretch the low period of the i2cx_scl signal.
(4) After this time, the first clock is generated.

Copyright © 2009–2014, Texas Instruments Incorporated

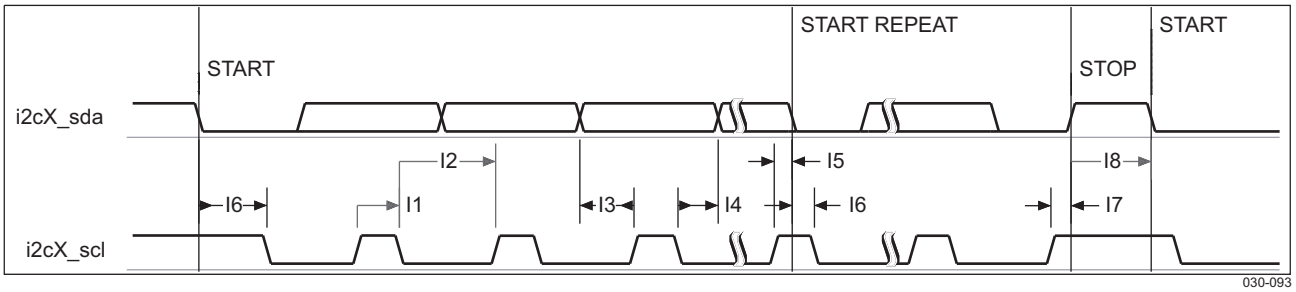

Figure 6-64. I²C Standard/Fast Mode

6.6.11.2 I²C High-Speed Mode

Table 6-127. I²C High-Speed Mode Timings(1) (2)

NO.	PARAMETER		1.8V, 3.3V		UNIT
			MIN	MAX	
	f_{SCL}	Clock frequency, i2cX_scl		3.4	MHz
I1	$t_{w(SCLH)}$	Pulse duration, i2cX_scl high	60(3)		s
I2	$t_{w(SCLL)}$	Pulse duration, i2cX_scl low	160(3)		s
I3	$t_{su(SDAV-SCLH)}$	Setup time, i2cX_sda valid before i2cX_scl active level	10		ns
I4	$t_{h(SCLHSDAV)}$	Hold time, i2cX_sda valid after i2cX_scl active level		70	s
I5	$t_{su(SDAL-SCLH)}$	Setup time, i2cX_scl high after i2cX_sda low (for a START(4) condition or a repeated START condition)	160		s
I6	$t_{h(SCLHSDAH)}$	Hold time, i2cX_sda low level after i2cX_scl high level (STOP condition)	160		s
I7	$t_{h(SCLHRSTART)}$	Hold time, i2cX_sda low level after i2cX_scl high level (for a repeated START condition)	160		ns
	$t_{R(SCL)}$	Rise time, i2cX_scl	10	40	ns
	$t_{R(SCL)}$	Rise time, i2cX_scl after a repeated START condition and after a bit acknowledge	10	80	ns
	$t_{F(SCL)}$	Fall time, i2cX_scl	10	40	ns
	$t_{R(SDA)}$	Rise time, i2cX_sda	10	80	ns
	$t_{F(SDA)}$	Fall time, i2cX_sda	10	80	ns

(1) In i2cX, X is equal to 1, 2, or 3.
(2) The device provides (via the I²C bus) a hold time of at least 300 ns for the i2cx_sda signal (refer to the fall and rise time of i2cx_scl) to bridge the undefined region of the falling edge of i2cx_scl.
(3) HS-mode master devices generate a serial clock signal with a high to low ratio of 1 to 2. $t_{w(SCLL)} > 2\ t_{w(SCLH)}$.
(4) After this time, the first clock is generated.

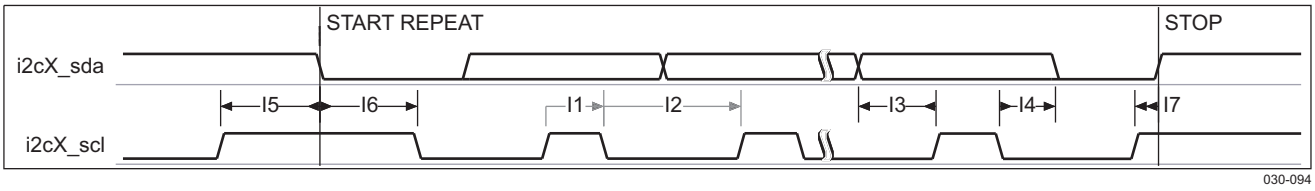

Figure 6-65. I²C High-Speed Mode(1) (2) (3)

(1) HS-mode master devices generate a serial clock signal with a high-to-low ratio of 1 to 2. $t_{w(SCLL)} > 2 \times t_{w(SCLH)}$.
(2) In i2cX, X is equal to 1, 2, or 3.
(3) After this time, the first clock is generated.

Table 6-128. Correspondence Standard vs. TI Timing References

	AM3517/05	STANDARD-I²C	
		S/F Mode	HS Mode
	f_{SCL}	F_{SCL}	F_{SCLH}
I1	$t_{w(SCLH)}$	T_{HIGH}	T_{HIGH}
I2	$t_{w(SCLL)}$	T_{LOW}	T_{LOW}
I3	$t_{su(SDAV-SCLH)}$	$T_{SU;DAT}$	$T_{SU;DAT}$
I4	$t_{h(SCLH-SDAV)}$	$T_{SU;DAT}$	$T_{SU;DAT}$
I5	$t_{su(SDAL-SCLH)}$	$T_{SU;STA}$	$T_{SU;STA}$
I6	$t_{h(SCLH-SDAH)}$	$T_{HD;STA}$	$T_{HD;STA}$
I7	$t_{h(SCLH-RSTART)}$	$T_{SU;STO}$	$T_{SU;STO}$
I8	$t_{w(SDAH)}$	T_{BUF}	

Copyright © 2009–2014, Texas Instruments Incorporated

6.7 Removable Media Interfaces

6.7.1 High-Speed Multimedia Memory Card (MMC) and Secure Digital IO Card (SDIO) Timing

The MMC/SDIO host controller provides an interface to high-speed and standard MMC, SD memory cards, or SDIO cards. The application interface is responsible for managing transaction semantics. The MMC/SDIO host controller deals with MMC/SDIO protocol at transmission level, packing data, adding CRC, start/end bit, and checking for syntactical correctness.

There are three MMC interfaces on the AM3517/05:

- MMC/SD/SDIO Interface 1:
  - 1.8-V/3.3-V support
  - 8 bits
- MMC/SD/SDIO Interface 2:
  - 1.8-V/3.3-V support
  - 8 bits
  - 4 bits with external transceiver allowing to support 1.8-V/3.3-V peripherals in 1.8-V mode operation. Transceiver direction control signals are multiplexed with the upper four data bits.
- MMC/SD/SDIO Interface 3:
  - 1.8-V/3.3-V support
  - 8 bits

6.7.1.1 MMC/SD/SDIO in SD Identification Mode

Table 6-129 through Table 6-131 assume testing over the recommended operating conditions and electrical characteristic conditions.

Table 6-129. MMC/SD/SDIO Timing Conditions SD Identification Mode

TIMING CONDITION PARAMETER		1.8V, 3.3V		UNIT
		MIN	MAX	
SD Identification Mode				
Input Conditions				
t_r	Input signal rise time		10	ns
t_f	Input signal fall time		10	ns
Output Conditions				
C_{LOAD}	Output load capacitance	30		pF

Table 6-130. MMC/SD/SDIO Timing Requirements SD Identification Mode(1) (2) (3)(4)

NO.	PARAMETER		1.8V, 3.3V		UNIT
			MIN	MAX	
SD Identification Mode					
MMC/SD/SDIO Interface 1					
HSSD3/SD3	$t_{su(CMDV-CLKIH)}$	Setup time, mmc1_cmd valid before mmc1_clk rising clock edge	1198.4		ns
HSSD4/SD4	$t_{su(CLKIH-CMDIV)}$	Hold time, mmc1_cmd valid after mmc1_clk rising clock edge	1249.2		ns
MMC/SD/SDIO Interface 2					
HSSD3/SD3	$t_{su(CMDV-CLKIH)}$	Setup time, mmc2_cmd valid before mmc2_clk rising clock edge	1198.4		ns

(1) Timing parameters refer to output clock specified in Table 6-131.
(2) The timing requirements are assured for the cycle jitter and duty cycle error conditions specified in Table 6-131.
(3) Corresponding figures showing timing parameters are common with other interface modes. (See SD and HS SD modes).
(4) For more information, see the *AM35x ARM Microprocessor Technical Reference Manual* (SPRUGR0).

Copyright © 2009–2014, Texas Instruments Incorporated

Table 6-130. MMC/SD/SDIO Timing Requirements SD Identification Mode(1) (2) (3)(4) (continued)

NO.	PARAMETER		1.8V, 3.3V		UNIT
			MIN	MAX	
HSSD4/SD4	$t_{su(CLKIH-CMDIV)}$	Hold time, mmc2_cmd valid after mmc2_clk rising clock edge	1249.2		ns
MMC/SD/SDIO Interface 3					
HSSD3/SD3	$t_{su(CMDV-CLKIH)}$	Setup time, mmc3_cmd valid before mmc3_clk rising clock edge	1198.4		ns
HSSD4/SD4	$t_{su(CLKIH-CMDIV)}$	Hold time, mmc3_cmd valid after mmc3_clk rising clock edge	1249.2		ns

Table 6-131. MMC/SD/SDIO Switching Characteristics SD Identification Mode(1)(2)

NO.	PARAMETER		1.8V, 3.3V		UNIT
			MIN	MAX	
SD Identification Mode					
HSSD1/SD1	$t_{c(clk)}$	Cycle time, output clk period		2500	ns
HSSD2/SD2	$t_{W(clkH)}$	Typical pulse duration, output clk high	X(3)*PO(4)		ns
HSSD2/SD2	$t_{W(clkL)}$	Typical pulse duration, output clk low	Y(5)*PO(4)		ns
	$t_{dc(clk)}$	Duty cycle error, output clk		125	ns
	$t_{j(clk)}$	Jitter standard deviation, output clk		200	ps
MMC/SD/SDIO Interface 1					
	$t_{r(clk)}$	Rise time, output clk		10	ns
	$t_{f(clkH)}$	Fall time, output clk		10	ns
	$t_{r(clkL)}$	Rise time, output data		10	ns
	$t_{f(clk)}$	Fall time, output data		10	ns
HSSD5/SD5	$t_{d(CLKOH-CMD)}$	Delay time, mmc1_clk rising clock edge to mmc1_cmd transition	6.3	2492.7	ns
MMC/SD/SDIO Interface 2					
	$t_{r(clk)}$	Rise time, output clk		10	ns
	$t_{f(clkH)}$	Fall time, output clk		10	ns
	$t_{r(clkL)}$	Rise time, output data		10	ns
	$t_{f(clk)}$	Fall time, output data		10	ns
HSSD5/SD5	$t_{d(CLKOH-CMD)}$	Delay time, mmc2_clk rising clock edge to mmc2_cmd transition	6.3	2492.7	ns
MMC/SD/SDIO Interface 3					
	$t_{r(clk)}$	Rise time, output clk		10	ns
	$t_{f(clkH)}$	Fall time, output clk		10	ns
	$t_{r(clkL)}$	Rise time, output data		10	ns
	$t_{f(clk)}$	Fall time, output data		10	ns
HSSD5/SD5	$t_{d(CLKOH-CMD)}$	Delay time, mmc3_clk rising clock edge to mmc3_cmd transition	6.3	2492.7	ns

(1) Corresponding figures showing timing parameters are common with other interface modes (see SD and HS SD modes).
(2) The jitter probability density can be approximated by a Gaussian function.
(3) The X parameter is defined as listed below.
(4) PO = output clk period in ns.
(5) The Y parameter is defined as listed below.

Table 6-132. X Parameter

CLKD	X
1 or Even	0.5
Odd	(trunc[CLKD/2]+1)/CLKD

Copyright © 2009–2014, Texas Instruments Incorporated

Table 6-133. Y Parameter

CLKD	Y
1 or Even	0.5
Odd	(trunc[CLKD/2])/CLKD

6.7.1.2 MMC/SD/SDIO in High-Speed MMC Mode

Table 6-134 through Table 6-136 assume testing over the recommended operating conditions and electrical characteristic conditions.

Table 6-134. MMC/SD/SDIO Timing Conditions High-Speed MMC Mode

TIMING CONDITION PARAMETER		1.8V, 3.3V		UNIT
		MIN	MAX	
High-Speed MMC Mode				
Input Conditions				
t_r	Input signal rise time	0.19	3	ns
t_f	Input signal fall time	0.19	3	ns
Output Conditions				
C_{LOAD}	Output load capacitance		30	pF

Table 6-135. MMC/SD/SDIO Timing Requirements High-Speed MMC Mode(1)(2)(3)(4)

NO.	PARAMETER		1.8 V		3.3V		UNIT
			MIN	MAX	MIN	MAX	
High-Speed MMC Mode							
MMC/SD/SDIO Interface 1							
MMC3	$t_{su(CMDV-CLKIH)}$	Setup time, mmc1_cmd valid before mmc1_clk rising clock edge	2.13		2.41		ns
MMC4	$t_{h(CLKIH-CMDIV)}$	Hold time, mmc1_cmd valid after mmc1_clk rising clock edge	3.47		2.09		ns
MMC7	$t_{su(DATxV-CLKIH)}$	Setup time, mmc1_datx valid before mmc1_clk rising clock edge	2.13		2.41		ns
MMC8	$t_{h(CLKIH-DATxIV)}$	Hold time, mmc1_datx valid after mmc1_clk rising clock edge	3.47		2.09		ns
MMC/SD/SDIO Interface 2							
MMC3	$t_{su(CMDV-CLKIH)}$	Setup time, mmc2_cmd valid before mmc2_clk rising clock edge	2.88		3.23		ns
MMC4	$t_{h(CLKIH-CMDIV)}$	Hold time, mmc2_cmd valid after mmc2_clk rising clock edge	2.90		1.46		ns
MMC7	$t_{su(DATxV-CLKIH)}$	Setup time, mmc2_datx valid before mmc2_clk rising clock edge	2.88		3.23		ns
MMC8	$t_{h(CLKIH-DATxIV)}$	Hold time, mmc2_datx valid after mmc2_clk rising clock edge	2.90		1.46		ns
MMC/SD/SDIO Interface 3							
MMC3	$t_{su(CMDV-CLKIH)}$	Setup time, mmc3_cmd valid before mmc3_clk rising clock edge	3.38		3.41		ns
MMC4	$t_{h(CLKIH-CMDIV)}$	Hold time, mmc3_cmd valid after mmc3_clk rising clock edge	2.83		1.46		ns
MMC7	$t_{su(DATxV-CLKIH)}$	Setup time, mmc3_datx valid before mmc3_clk rising clock edge	3.38		3.41		ns
MMC8	$t_{h(CLKIH-DATxIV)}$	Hold time, mmc3_datx valid after mmc3_clk rising clock edge	2.83		1.46		ns

(1) In datx, x is equal to 1, 2, 3, 4, 5, 6, or 7.
(2) Timing parameters refer to output clock specified in Table 6-136.
(3) The timing requirements are assured for the cycle jitter and duty cycle error conditions specified in Table 6-136.
(4) Corresponding figures showing timing parameters are common with Standard MMC mode.

Copyright © 2009–2014, Texas Instruments Incorporated

Table 6-136. MMC/SD/SDIO Switching Characteristics High-Speed MMC Mode[1][2]

N O.	PARAMETER		1.8V, 3.3V		UNIT
			MIN	MAX	
High-Speed MMC Mode					
MMC1	$t_{c(clk)}$	Cycle time, output clk period		20.83	ns
MMC2	$t_{W(clkH)}$	Typical pulse duration, output clk high	X[3]*PO[4]		ns
MMC2	$t_{W(clkL)}$	Typical pulse duration, output clk low	Y[5]*PO[4]		ns
	$t_{dc(clk)}$	Duty cycle error, output clk		1041.67	ps
	$t_{j(clk)}$	Jitter standard deviation, output clk		200	ps
MMC/SD/SDIO Interface 1					
	$t_{c(clk)}$	Rise time, output clk		3	ns
	$t_{W(clkH)}$	Fall time, output clk		3	ns
	$t_{W(clkL)}$	Rise time, output data		3	ns
	$t_{dc(clk)}$	Fall time, output data		3	ns
MMC5	$t_{d(CLKOH-CMD)}$	Delay time, mmc1_clk rising clock edge to mmc1_cmd transition	3.7	14.11	ns
MMC6	$t_{d(CLKOH-DATx)}$	Delay time, mmc1_clk rising clock edge to mmc1_datx transition	3.7	16.50	ns
MMC/SD/SDIO Interface 2					
	$t_{c(clk)}$	Rise time, output clk		3	ns
	$t_{W(clkH)}$	Fall time, output clk		3	ns
	$t_{W(clkL)}$	Rise time, output data		3	ns
	$t_{dc(clk)}$	Fall time, output data		3	ns
MMC5	$t_{d(CLKOH-CMD)}$	Delay time, mmc2_clk rising clock edge to mmc2_cmd transition	3.7	14.11	ns
MMC6	$t_{d(CLKOH-DATx)}$	Delay time, mmc2_clk rising clock edge to mmc2_datx transition	3.7	16.50	ns
MMC/SD/SDIO Interface 3					
	$t_{c(clk)}$	Rise time, output clk		3	ns
	$t_{W(clkH)}$	Fall time, output clk		3	ns
	$t_{W(clkL)}$	Rise time, output data		3	ns
	$t_{dc(clk)}$	Fall time, output data		3	ns
MMC5	$t_{d(CLKOH-CMD)}$	Delay time, mmc3_clk rising clock edge to mmc3_cmd transition	3.7	14.11	ns
MMC6	$t_{d(CLKOH-DATx)}$	Delay time, mmc3_clk rising clock edge to mmc3_datx transition	3.7	14.11	ns

(1) In datx, x is equal to 1, 2, 3, 4, 5, 6, or 7.
(2) The jitter probability density can be approximated by a Gaussian function.
(3) The X parameter is defined as listed below.
(4) PO = output clk period in ns.
(5) The Y parameter is defined as listed below.

Table 6-137. X Parameter

CLKD	X
1 or Even	0.5
Odd	(trunc[CLKD/2]+1)/CLKD

Table 6-138. Y Parameter

CLKD	Y
1 or Even	0.5
Odd	(trunc[CLKD/2])/CLKD

Copyright © 2009–2014, Texas Instruments Incorporated

For details about clock division factor CLKD, see the *AM35x ARM Microprocessor Technical Reference Manual* (SPRUGR0).

6.7.1.3 MMC/SD/SDIO in Standard MMC Mode and MMC Identification Mode

Table 6-139 through Table 6-141 assume testing over the recommended operating conditions and electrical characteristic conditions.

Table 6-139. MMC/SD/SDIO Timing Conditions Standard MMC Mode and MMC Identification Mode

TIMING CONDITION PARAMETER		1.8-V,3.3-V		UNIT
		MIN	MAX	
Standard MMC Mode and MMC Identification Mode				
Input Conditions				
t_r	Input signal rise time	0.19	10	ns
t_f	Input signal fall time	0.19	10	ns
Output Conditions				
C_{LOAD}	Output load capacitance	30		pF

Table 6-140. MMC/SD/SDIO Timing Requirements Standard MMC Mode and MMC Identification Mode(1)(2)(3)

NO.	PARAMETER		1.8 V		3.3V		UNIT
			MIN	MAX	MIN	MAX	
Standard MMC Mode and MMC Identification Mode							
MMC/SD/SDIO Interface 1							
MMC3	$t_{su(CMDV-CLKIH)}$	Setup time, mmc1_cmd valid before mmc1_clk rising clock edge	2.13		2.41		ns
MMC4	$t_{h(CLKIH-CMDIV)}$	Hold time, mmc1_cmd valid after mmc1_clk rising clock edge	3.47		2.09		ns
MMC7	$t_{su(DATxV-CLKIH)}$	Setup time, mmc1_datx valid before mmc1_clk rising clock edge	2.13		2.41		ns
MMC8	$t_{h(CLKIH-DATxIV)}$	Hold time, mmc1_datx valid after mmc1_clk rising clock edge	3.47		2.09		ns
MMC/SD/SDIO Interface 2							
MMC3	$t_{su(CMDV-CLKIH)}$	Setup time, mmc2_cmd valid before mmc2_clk rising clock edge	2.88		3.23		ns
MMC4	$t_{h(CLKIH-CMDIV)}$	Hold time, mmc2_cmd valid after mmc2_clk rising clock edge	2.90		1.46		ns
MMC7	$t_{su(DATxV-CLKIH)}$	Setup time, mmc2_datx valid before mmc2_clk rising clock edge	2.88		3.23		ns
MMC8	$t_{h(CLKIH-DATxIV)}$	Hold time, mmc2_datx valid after mmc2_clk rising clock edge	2.90		1.46		ns
MMC/SD/SDIO Interface 3							
MMC3	$t_{su(CMDV-CLKIH)}$	Setup time, mmc3_cmd valid before mmc3_clk rising clock edge	3.38		3.41		ns
MMC4	$t_{h(CLKIH-CMDIV)}$	Hold time, mmc3_cmd valid after mmc3_clk rising clock edge	2.83		1.46		ns
MMC7	$t_{su(DATxV-CLKIH)}$	Setup time, mmc3_datx valid before mmc3_clk rising clock edge	3.38		3.41		ns
MMC8	$t_{h(CLKIH-DATxIV)}$	Hold time, mmc3_datx valid after mmc3_clk rising clock edge	2.83		1.46		ns

(1) Timing parameters are referred to output clock specified in Table 6-141.
(2) The timing requirements are assured for the cycle jitter and duty cycle error conditions specified in Table 6-141.
(3) In datx, x is equal to 1, 2, 3, 4, 5, 6, or 7.

Table 6-141. MMC/SD/SDIO Switching Characteristics Standard MMC Mode and MMC Identification Mode(1)(2)

NO.	PARAMETER		1.8V, 3.3V		UNIT
			MIN	MAX	
MMC Identification Mode					
MMC1	$t_{c(clk)}$	Cycle time		2500	ns
MMC2	$t_{W(clkH)}$	Typical pulse duration, output clk high	X(3)*PO(4)		ns
MMC2	$t_{W(clkL)}$	Typical pulse duration, output clk low	Y(5)*PO(4)		ns
	$t_{dc(clk)}$	Duty cycle error, output clk		2604.17	ns
	$t_{j(clk)}$	Jitter standard deviation		200	ps
Standard MMC Mode					
MMC1	$t_{c(clk)}$	Cycle time		2500	ns
MMC2	$t_{W(clkH)}$	Typical pulse duration, output clk high	X(3)*PO(4)		ns
MMC2	$t_{W(clkL)}$	Typical pulse duration, output clk low	Y(5)*PO(4)		ns

(1) In datx, x is equal to 1, 2, 3, 4, 5, 6, or 7.
(2) The jitter probability density can be approximated by a Gaussian function.
(3) The X parameter is defined as listed below.
(4) PO = output clk period in ns.
(5) The Y parameter is defined as listed below.

Copyright © 2009–2014, Texas Instruments Incorporated

Table 6-141. MMC/SD/SDIO Switching Characteristics Standard MMC Mode and MMC Identification Mode[1][2] (continued)

NO.	PARAMETER		1.8V, 3.3V		UNIT
			MIN	MAX	
	$t_{dc(clk)}$	Duty cycle error, output clk		2604.17	ps
	$t_{j(clk)}$	Jitter standard deviation		200	ps
MMC/SD/SDIO Interface 1					
	$t_{r(clk)}$	Rise time, output clk		10	ns
	$t_{f(clkH)}$	Fall time, output clk		10	ns
	$t_{r(clkL)}$	Rise time, output data		10	ns
	$t_{f(clk)}$	Fall time, output data		10	ns
MMC5	$t_{d(CLKOH-CMD)}$	Delay time, mmc1_clk rising clock edge to mmc1_cmd transition	4.3	47.78	ns
MMC6	$t_{d(CLKOH-DATx)}$	Delay time, mmc1_clk rising clock edge to mmc1_datx transition	4.3	47.78	ns
MMC/SD/SDIO Interface 2					
	$t_{r(clk)}$	Rise time, output clk		10	ns
	$t_{f(clkH)}$	Fall time, output clk		10	ns
	$t_{r(clkL)}$	Rise time, output data		10	ns
	$t_{f(clk)}$	Fall time, output data		10	ns
MMC5	$t_{d(CLKOH-CMD)}$	Delay time, mmc2_clk rising clock edge to mmc2_cmd transition	4.3	47.78	ns
MMC6	$t_{d(CLKOH-DATx)}$	Delay time, mmc2_clk rising clock edge to mmc2_datx transition	4.3	47.78	ns
MMC/SD/SDIO Interface 3					
	$t_{r(clk)}$	Rise time, output clk		10	ns
	$t_{f(clkH)}$	Fall time, output clk		10	ns
	$t_{r(clkL)}$	Rise time, output data		10	ns
	$t_{f(clk)}$	Fall time, output data		10	ns
MMC5	$t_{d(CLKOH-CMD)}$	Delay time, mmc3_clk rising clock edge to mmc3_cmd transition	4.3	47.78	ns
MMC6	$t_{d(CLKOH-DATx)}$	Delay time, mmc3_clk rising clock edge to mmc3_datx transition	4.3	47.78	ns

Table 6-142. X Parameter

CLKD	X
1 or Even	0.5
Odd	(trunc[CLKD/2]+1)/CLKD

Table 6-143. Y Parameter

CLKD	Y
1 or Even	0.5
Odd	(trunc[CLKD/2])/CLKD

For details about clock division factor CLKD, see the *AM35x ARM Microprocessor Technical Reference Manual* (SPRUGR0).

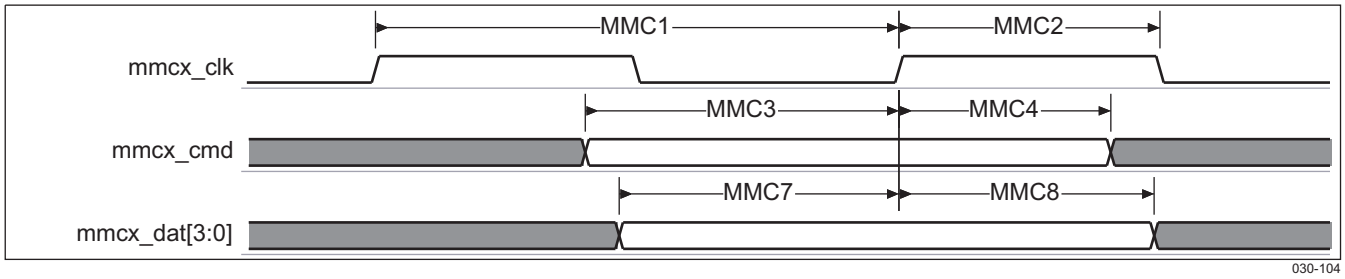

In mmcx, x is equal to 1, 2, or 3.

Figure 6-66. MMC/SD/SDIO High-Speed and Standard MMC Modes Data/Command Receive

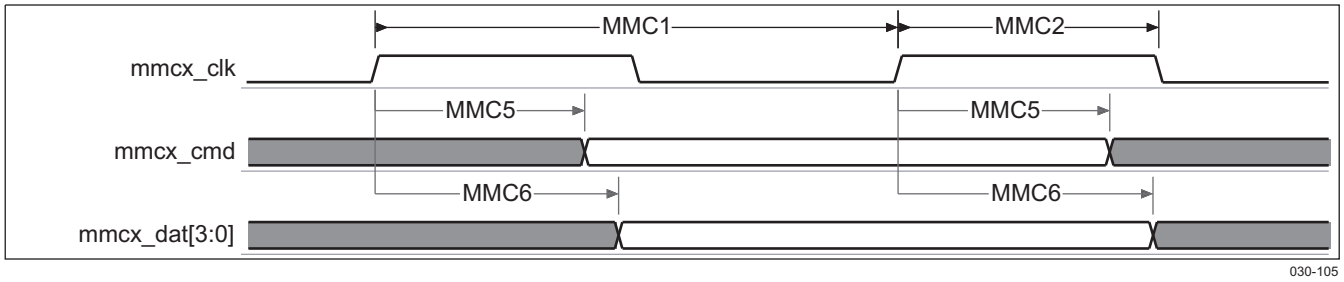

In mmcx, x is equal to 1, 2, or 3.

Figure 6-67. MMC/SD/SDIO High-Speed and Standard MMC Modes Data/Command Transmit

6.7.1.4 MMC/SD/SDIO in High-Speed SD Mode

Table 6-144 through Table 6-146 assume testing over the recommended operating conditions and electrical characteristic conditions.

Table 6-144. MMC/SD/SDIO Timing Conditions High-Speed SD Mode

TIMING CONDITION PARAMETER		1.8V, 3.3V		UNIT
		MIN	MAX	
High-Speed SD Mode				
Input Conditions				
t_R	Input signal rise time	0.19	3	ns
t_F	Input signal fall time	0.19	3	ns
Output Conditions				
C_{LOAD}	Output load capacitance	30		pF

Table 6-145. MMC/SD/SDIO Timing Requirements High-Speed SD Mode(1)(2)(3)

NO.	PARAMETER		1.8V, 3.3V		UNIT
			MIN	MAX	
High-Speed SD Mode					
MMC/SD/SDIO Interface 1					
HSSD3	$t_{su(CMDV-CLKIH)}$	Setup time, mmc1_cmd valid before mmc1_clk rising clock edge	5.61		ns
HSSD4	$t_{h(CLKIH-CMDIV)}$	Hold time, mmc1_cmd valid after mmc1_clk rising clock edge	2.28		ns

(1) In datx, x is equal to 1, 2, 3, 4, 5, 6, or 7.
(2) The timing requirements are assured for the cycle jitter and duty cycle error conditions specified in Table 6-146.
(3) Timing Parameters refer to output clock specified in Table 6-146.

Copyright © 2009–2014, Texas Instruments Incorporated

Table 6-145. MMC/SD/SDIO Timing Requirements High-Speed SD Mode[1][2][3] (continued)

NO.	PARAMETER		1.8V, 3.3V		UNIT
			MIN	MAX	
HSSD7	$t_{su(DATxV-CLKIH)}$	Setup time, mmc1_datx valid before mmc1_clk rising clock edge	5.61		ns
HSSD8	$t_{h(CLKIH-DATxIV)}$	Hold time, mmc1_datx valid after mmc1_clk rising clock edge	2.28		ns
MMC/SD/SDIO Interface 2					
HSSD3	$t_{su(CMDV-CLKIH)}$	Setup time, mmc2_cmd valid before mmc2_clk rising clock edge	5.61		ns
HSSD4	$t_{h(CLKIH-CMDIV)}$	Hold time, mmc2_cmd valid after mmc2_clk rising clock edge	2.28		ns
HSSD7	$t_{su(DATxV-CLKIH)}$	Setup time, mmc2_datx valid before mmc2_clk rising clock edge	5.61		ns
HSSD8	$t_{h(CLKIH-DATxIV)}$	Hold time, mmc2_datx valid after mmc2_clk rising clock edge	2.28		ns
MMC/SD/SDIO Interface 3					
HSSD3	$t_{su(CMDV-CLKIH)}$	Setup time, mmc3_cmd valid before mmc3_clk rising clock edge	5.61		ns
HSSD4	$t_{h(CLKIH-CMDIV)}$	Hold time, mmc3_cmd valid after mmc3_clk rising clock edge	2.28		ns
HSSD7	$t_{su(DATxV-CLKIH)}$	Setup time, mmc3_datx valid before mmc3_clk rising clock edge	5.61		ns
HSSD8	$t_{h(CLKIH-DATxIV)}$	Hold time, mmc3_datx valid after mmc3_clk rising clock edge	2.28		ns

Table 6-146. MMC/SD/SDIO Switching Characteristics High-Speed SD Mode[1][2]

NO.	PARAMETER		1.8 V, 3.3 V		UNIT
			MIN	MAX	
High-Speed SD Mode					
HSSD1	$t_{c(clk)}$	Cycle time		20.83	ns
HSSD2	$t_{W(clkH)}$	Typical pulse duration, output clk high	X[3]*PO[4]		ns
HSSD2	$t_{W(clkL)}$	Typical pulse duration, output clk low	Y[5]*PO[4]		ns
	$t_{dc(clk)}$	Duty cycle error, output clk		1041.67	ps
	$t_{j(clk)}$	Jitter standard deviation		200	ps
MMC/SD/SDIO Interface 1					
	$t_{r(clk)}$	Rise time, output clk		3	ns
	$t_{f(clkH)}$	Fall time, output clk		3	ns
	$t_{r(clkL)}$	Rise time, output data		3	ns
	$t_{f(clk)}$	Fall time, output data		3	ns
HSSD5	$t_{d(CLKOH-CMD)}$	Delay time, mmc1_clk rising clock edge to mmc1_cmd transition	3.72	14.11	ns
HSSD6	$t_{d(CLKOH-DATx)}$	Delay time, mmc1_clk rising clock edge to mmc1_datx transition	3.72	14.11	ns
MMC/SD/SDIO Interface 2					
	$t_{r(clk)}$	Rise time, output clk		3	ns
	$t_{f(clkH)}$	Fall time, output clk		3	ns
	$t_{r(clkL)}$	Rise time, output data		3	ns
	$t_{f(clk)}$	Fall time, output data		3	ns

(1) In datx, x is equal to 1, 2, 3, 4, 5, 6, or 7.
(2) The jitter probability density can be approximated by a Gaussian function.
(3) The X parameter is defined as listed in Table 6-147.
(4) PO = output clk period in ns.
(5) The Y parameter is defined as listed in Table 6-148.

Copyright © 2009–2014, Texas Instruments Incorporated

Table 6-146. MMC/SD/SDIO Switching Characteristics High-Speed SD Mode[1][2] (continued)

NO.	PARAMETER		1.8 V, 3.3 V		UNIT
			MIN	MAX	
HSSD5	$t_{d(CLKOH-CMD)}$	Delay time, mmc2_clk rising clock edge to mmc2_cmd transition	3.72	14.11	ns
HSSD6	$t_{d(CLKOH-DATx)}$	Delay time, mmc2_clk rising clock edge to mmc2_datx transition	3.72	14.11	ns
MMC/SD/SDIO Interface 3					
	$t_{r(clk)}$	Rise time, output clk		3	ns
	$t_{f(clkH)}$	Fall time, output clk		3	ns
	$t_{r(clkL)}$	Rise time, output data		3	ns
	$t_{f(clk)}$	Fall time, output data		3	ns
HSSD5	$t_{d(CLKOH-CMD)}$	Delay time, mmc3_clk rising clock edge to mmc3_cmd transition	3.72	14.11	ns
HSSD6	$t_{d(CLKOH-DATx)}$	Delay time, mmc3_clk rising clock edge to mmc3_datx transition	3.72	14.11	ns

Table 6-147. X Parameters

CLKD	X
1 or Even	0.5
Odd	(trunc[CLKD/2]+1)/CLKD

Table 6-148. Y Parameters

CLKD	Y
1 or Even	0.5
Odd	(trunc[CLKD/2])/CLKD

For details about clock division factor CLKD, see the *AM35x ARM Microprocessor Technical Reference Manual* (SPRUGR0).

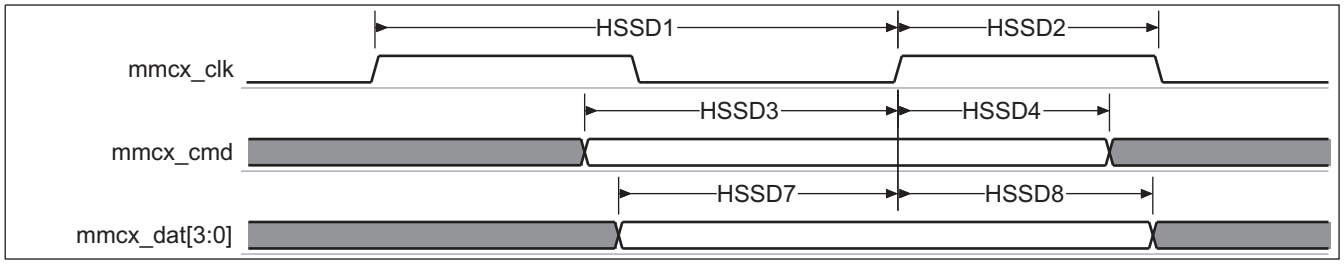

In mmcx, x is equal to 1, 2, or 3.

Figure 6-68. MMC/SD/SDIO High-Speed SD Mode Data/Command Receive

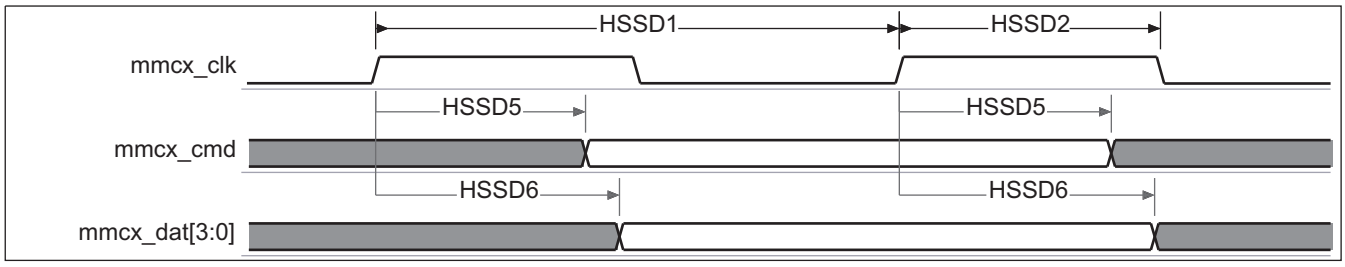

In mmcx, x is equal to 1, 2, or 3.

Figure 6-69. MMC/SD/SDIO High-Speed SD Mode Data/Command Transmit

Copyright © 2009–2014, Texas Instruments Incorporated

6.7.1.5 MMC/SD/SDIO in Standard SD Mode

Table 6-149 through Table 6-151 assume testing over the recommended operating conditions and electrical characteristic conditions.

Table 6-149. MMC/SD/SDIO Timing Conditions Standard SD Mode

TIMING CONDITION PARAMETER		1.8V, 3.3V		UNIT
		MIN	MAX	
Standard SD Mode				
Input Conditions				
t_R	Input signal rise time	0.19	10	ns
t_F	Input signal fall time	0.19	10	ns
Output Conditions				
C_{LOAD}	Output load capacitance	30		pF

Table 6-150. MMC/SD/SDIO Timing Requirements Standard SD Mode(1)(2)(3)

NO.	PARAMETER		1.8 V, 3.3V		UNIT
			MIN	MAX	
Standard SD Mode					
MMC/SD/SDIO Interface 1					
SD3	$t_{su(CMDV-CLKIH)}$	Setup time, mmc1_cmd valid before mmc1_clk rising clock edge	6.23		ns
SD4	$t_{h(CLKIH-CMDIV)}$	Hold time, mmc1_cmd valid after mmc1_clk rising clock edge	19.37		ns
SD7	$t_{su(DATxV-CLKIH)}$	Setup time, mmc1_datx valid before mmc1_clk rising clock edge	6.23		ns
SD8	$t_{h(CLKIH-DATxIV)}$	Hold time, mmc1_datx valid after mmc1_clk rising clock edge	19.37		ns
MMC/SD/SDIO Interface 2					
SD3	$t_{su(CMDV-CLKIH)}$	Setup time, mmc2_cmd valid before mmc2_clk rising clock edge	6.23		ns
SD4	$t_{h(CLKIH-CMDIV)}$	Hold time, mmc2_cmd valid after mmc2_clk rising clock edge	19.37		ns
SD7	$t_{su(DATxV-CLKIH)}$	Setup time, mmc2_datx valid before mmc2_clk rising clock edge	6.23		ns
SD8	$t_{h(CLKIH-DATxIV)}$	Hold time, mmc2_datx valid after mmc2_clk rising clock edge	19.37		ns
MMC/SD/SDIO Interface 3					
SD3	$t_{su(CMDV-CLKIH)}$	Setup time, mmc3_cmd valid before mmc3_clk rising clock edge	6.23		ns
SD4	$t_{h(CLKIH-CMDIV)}$	Hold time, mmc3_cmd valid after mmc3_clk rising clock edge	19.37		ns
SD7	$t_{su(DATxV-CLKIH)}$	Setup time, mmc3_datx valid before mmc3_clk rising clock edge	6.23		ns
SD8	$t_{h(CLKIH-DATxIV)}$	Hold time, mmc3_datx valid after mmc3_clk rising clock edge	19.37		ns

(1) Timing parameters refer to output clock specified in Table 6-151.
(2) The timing requirements are assured for the cycle jitter and duty cycle error conditions specified in Table 6-151.
(3) In datx, x is equal to 1, 2, 3, 4, 5, 6, or 7.

Table 6-151. MMC/SD/SDIO Switching Characteristics Standard SD Mode(1)(2)

NO.	PARAMETER		1.8V, 3.3V		UNIT
			MIN	MAX	
Standard SD Mode					
SD1	$t_{c(clk)}$	Cycle time		41.67	ns
SD2	$t_{W(clkH)}$	Typical pulse duration, output clk high	X(3)*PO(4)		ns
SD2	$t_{W(clkL)}$	Typical pulse duration, output clk low	Y(5)*PO(4)		ns
	$t_{dc(clk)}$	Duty cycle error, output clk		2083.33	ps
	$t_{j(clk)}$	Jitter standard deviation		200	ps
MMC/SD/SDIO Interface 1					
	$t_{r(clk)}$	Rise time, output clk		10	ns
	$t_{f(clkH)}$	Fall time, output clk		10	ns
	$t_{r(clkL)}$	Rise time, output data		10	ns
	$t_{f(clk)}$	Fall time, output data		10	ns

(1) The jitter probability density can be approximated by a Gaussian function.
(2) In datx, x is equal to 1, 2, 3, 4, 5, 6, or 7.
(3) The X parameter is defined as listed in Table 6-152.
(4) PO = output clk period in ns.
(5) The Y parameter is defined as listed in Table 6-153.

Copyright © 2009–2014, Texas Instruments Incorporated

Table 6-151. MMC/SD/SDIO Switching Characteristics Standard SD Mode[1][2] (continued)

NO.	PARAMETER		1.8V, 3.3V		UNIT
			MIN	MAX	
SD5	$t_{d(CLKOH-CMD)}$	Delay time, mmc1_clk rising clock edge to mmc1_cmd transition	6.13	35.53	ns
SD6	$t_{d(CLKOH-DATx)}$	Delay time, mmc1_clk rising clock edge to mmc1_datx transition	6.13	35.53	ns
MMC/SD/SDIO Interface 2					
	$t_{r(clk)}$	Rise time, output clk		10	ns
	$t_{f(clkH)}$	Fall time, output clk		10	ns
	$t_{r(clkL)}$	Rise time, output data		10	ns
	$t_{f(clk)}$	Fall time, output data		10	ns
SD5	$t_{d(CLKOH-CMD)}$	Delay time, mmc2_clk rising clock edge to mmc2_cmd transition	6.13	35.53	ns
SD6	$t_{d(CLKOH-DATx)}$	Delay time, mmc2_clk rising clock edge to mmc2_datx transition	6.13	35.53	ns
MMC/SD/SDIO Interface 3					
	$t_{r(clk)}$	Rise time, output clk		10	ns
	$t_{f(clkH)}$	Fall time, output clk		10	ns
	$t_{r(clkL)}$	Rise time, output data		10	ns
	$t_{f(clk)}$	Fall time, output data		10	ns
SD5	$t_{d(CLKOH-CMD)}$	Delay time, mmc3_clk rising clock edge to mmc3_cmd transition	6.13	35.53	ns
SD6	$t_{d(CLKOH-DATx)}$	Delay time, mmc3_clk rising clock edge to mmc3_datx transition	6.13	35.53	ns

Table 6-152. X Parameter

CLKD	X
1 or Even	0.5
Odd	(trunc[CLKD/2]+1)/CLKD

Table 6-153. Y Parameter

CLKD	Y
1 or Even	0.5
Odd	(trunc[CLKD/2])/CLKD

For details about clock division factor CLKD, see the *AM35x ARM Microprocessor Technical Reference Manual* (SPRUGR0).

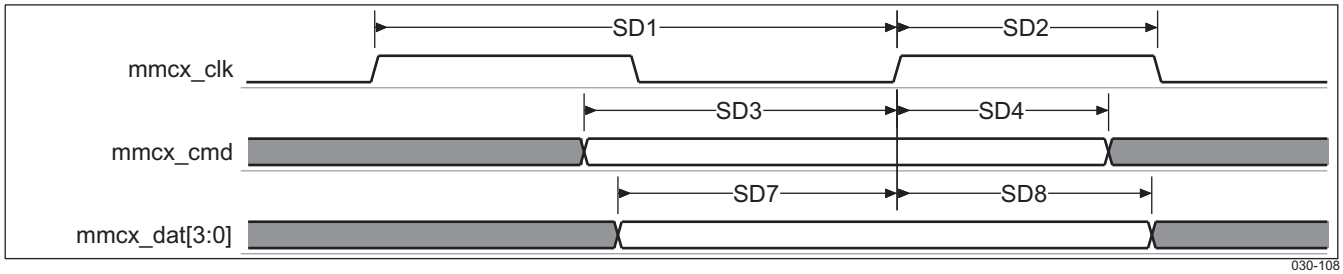

In mmcx, x is equal to 1, 2, or 3.

Figure 6-70. MMC/SD/SDIO Standard SD Mode Data/Command Receive

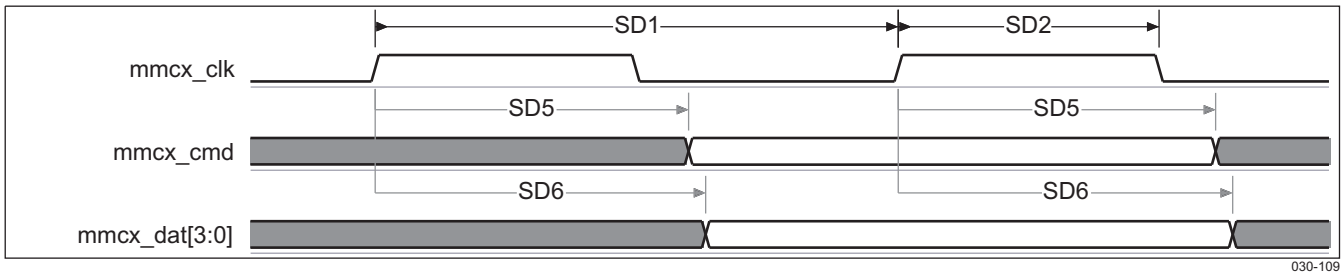

In mmcx, x is equal to 1, 2, or 3.

Figure 6-71. MMC/SD/SDIO Standard SD Mode Data/Command Transmit

Copyright © 2009–2014, Texas Instruments Incorporated

6.8 Test Interfaces

The emulation and trace interfaces allow tracing activities of the following CPUs:

- ARM Cortex™-A8 through an Embedded Trace Macro-cell (ETM11) dedicated to enable real-time trace of the ARM subsystem operations.

All processors can be emulated via JTAG ports.

6.8.1 Embedded Trace Macro Interface (ETM)

Table 6-154 assumes testing over the recommended operating conditions.

Table 6-154. Embedded Trace Macro Interface Switching Characteristics

NO.	PARAMETER		MIN	MAX	UNIT
f	$1/t_{c(CLK)}$	Frequency, etk_clk		166	MHz
ETM0	$t_{c(CLK)}$	Cycle time	6.02		ns
ETM1	$t_{W(CLK)}$	Clock pulse width, etk_clk	3.01		ns
ETM2	$t_{d(CLK-CTL)}$	Delay time, etk_clk clock edge to etk_ctl transition	-0.5	0.5	ns
ETM3	$t_{d(CLK-D)}$	Delay time, etk_clk clock high to etk_d[15:0] transition	-0.5	0.5	ns

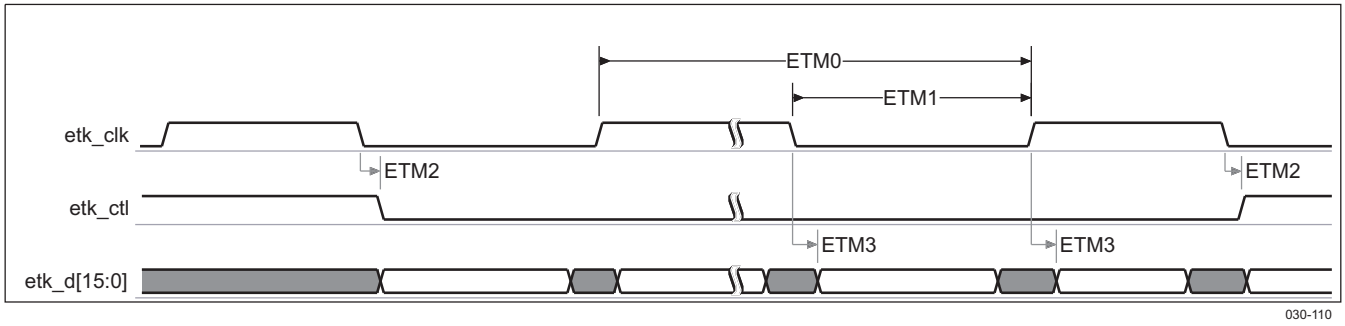

Figure 6-72. Embedded Trace Macro Interface

6.8.2 JTAG Interfaces

AM3517/05 JTAG TAP controller handles standard IEEE JTAG interfaces. The following sections define the timing requirements for several tools used to test the AM3517/05 processors as:

- Free running clock tool, like XDS560 and XDS510 tools
- Adaptive clock tool, like RealView ICE tool and Lauterbach tool

6.8.2.1 JTAG Free Running Clock Mode

Table 6-155 through Table 6-157 assume testing over the recommended operating conditions and electrical characteristic conditions.

Table 6-155. JTAG Timing Conditions Free Running Clock Mode

TIMING CONDITION PARAMETER		1.8 V	3.3 V	UNIT
		MAX	MAX	
Input Conditions				
t_R	Input signal rise time	5	3	ns
t_F	Input signal fall time	5	3	ns
Output Conditions				
C_{LOAD}	Output load capacitance	30		pF

Copyright © 2009–2014, Texas Instruments Incorporated

Table 6-156. JTAG Timing Requirements Free Running Clock Mode[1][2][3]

NO.	PARAMETER		1.8V		3.3V		UNIT
			MIN	MAX	MIN	MAX	
JT4	$t_{c(tck)}$	Cycle time	20		20		ns
JT5	$t_{w(tckL)}$	Typical pulse duration, jtag_tck low	10		10		ns
JT6	$t_{w(tckH)}$	Typical pulse duration, jtag_tck high	10		10		ns
	$t_{dc(tck)}$	Duty cycle error, jtag_tck	-1250	1250	-1250	1250	ps
	$t_{j(tck)}$	Cycle jitter	-1250	1250	-1250	1250	ps
JT7	$t_{su(tdiV-rtckH)}$	Setup time, jtag_tdi valid before jtag_rtck high	1.8		3.8		ns
JT8	$t_{h(tdiV-rtckH)}$	Hold time, jtag_tdi valid after jtag_rtck high	0.7		2.7		ns
JT9	$t_{su(tmsV-rtckH)}$	Setup time, jtag_tms valid before jtag_rtck high	1.8		3.8		ns
JT10	$t_{h(tmsV-rtckH)}$	Hold time, jtag_tms valid after jtag_rtck high	0.7		2.7		ns
JT12	$t_{su(emuxV-rtckH)}$	Setup time, jtag_emux	14.6		14.6		ns
JT13	$t_{h(emuxV-rtckH)}$	Hold time,jtag_emux	2		2		ns

(1) Maximum cycle jitter supported by jtag _tck input clock.
(2) x = 0 to 1
(3) The timing requirements are assured for the cycle jitter and duty cycle error conditions specified.

Table 6-157. JTAG Switching Characteristics Free Running Clock Mode[1][2]

NO.	PARAMETER		1.8 V		3.3 V		UNIT
			MIN	MAX	MIN	MAX	
JT1	$t_{c(rtck)}$	Cycle time[1], jtag_rtck period	20		20		ns
JT2	$t_{w(rtckL)}$	Typical pulse duration, jtag_rtck low	10		10		ns
JT3	$t_{w(rtckH)}$	Typical pulse duration, jtag_rtck high	10		10		ns
	$t_{dc(rtck)}$	Duty cycle error, jtag_rtck	-1250	1250	-1250	1250	ps
	$t_{j(rtck)}$	Jitter standard deviation[2], jtag_rtck		33.33		33.33	ps
	$t_{R(rtck)}$	Rise time, jtag_rtck		4		4	ns
	$t_{F(rtck)}$	Fall time, jtag_rtck		4		4	ns
JT11	$t_{d(rtckL-tdoV)}$	Delay time, jtag_rtck low to jtag_tdo valid	-5.8	5.8	-8	8	ns
	$t_{R(tdo)}$	Rise time, jtag_tdo		4		4	ns
	$t_{F(tdo)}$	Fall time, jtag_tdo		4		4	ns
JT14	$t_{d(rtckH-emuxV)}$	Delay time, jtag_rtck high to ,jtag_emux	2.7	15.1	2.7	15.1	ns
	$t_{R(emux)}$	Rise time, jtag_emux		6		6	ns
	$t_{F(emux)}$	Fall time, jtag_emux		6		6	ns

(1) Related with the jtag_rtck maximum frequency.
(2) The jitter probability density can be approximated by a Gaussian function.

Copyright © 2009–2014, Texas Instruments Incorporated

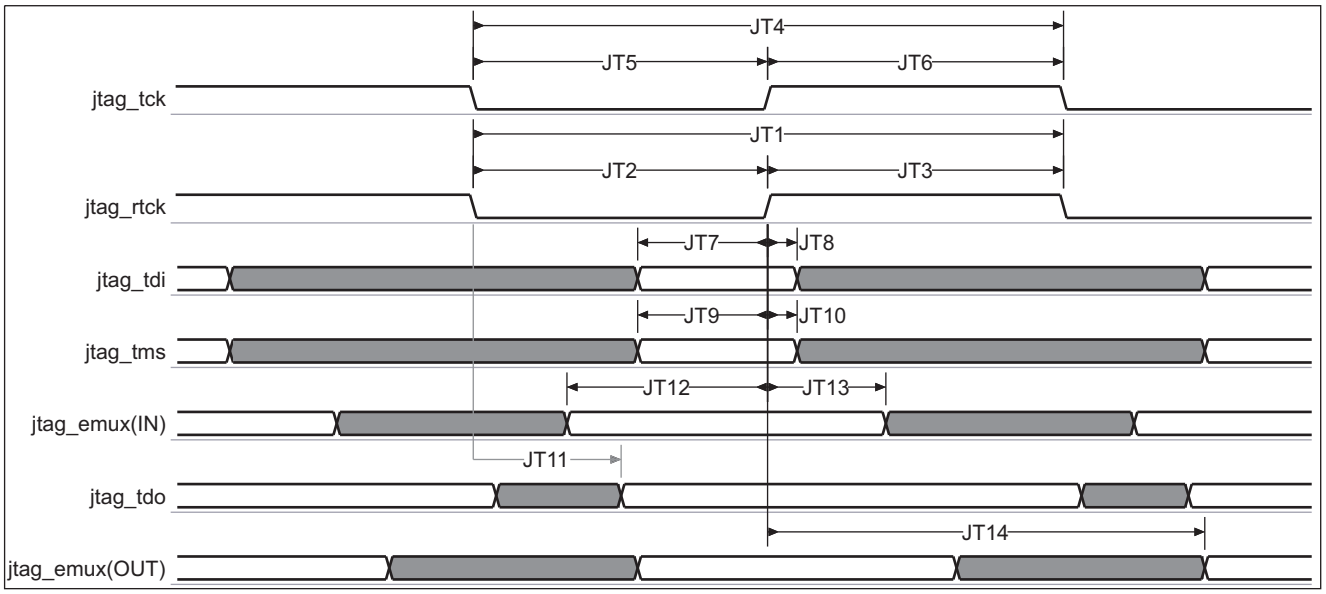

In jtag_emux, x is equal to 0 to 1.

Figure 6-73. JTAG Interface Timing Free Running Clock Mode

6.8.2.2 JTAG Adaptive Clock Mode

Table 6-158 through Table 6-160 assume testing over the recommended operating conditions and electrical characteristic conditions.

Table 6-158. JTAG Timing Conditions Adaptive Clock Mode

TIMING CONDITION PARAMETER		1.8 V	3.3 V	UNIT
		MAX	MAX	
Input Conditions				
t_R	Input signal rise time	5	3	ns
t_F	Input signal fall time	5	3	ns
Output Conditions				
C_{LOAD}	Output load capacitance		30	pF

Table 6-159. JTAG Timing Requirements Adaptive Clock Mode(1)(2)

NO.	PARAMETER		1.8 V		3.3 V		UNIT
			MIN	MAX	MIN	MAX	
JA4	$t_{c(tck)}$	Cycle time	20		20		ns
JA5	$t_{w(tckL)}$	Typical pulse duration, jtag_tck low	10		10		ns
JA6	$t_{w(tckH)}$	Typical pulse duration, jtag_tck high	10		10		ns
	$t_{dc(lclk)}$	Duty cycle error, jtag_tck	-2500	2500	-2500	2500	ps
	$t_{j(lclk)}$	Cycle jitter	-1500	1500	-1500	1500	ps
JA7	$t_{su(tdiV-tckH)}$	Setup time, jtag_tdi valid before jtag_tck high	13.8		13.8		ns
JA8	$t_{h(tdiV-tckH)}$	Hold time, jtag_tdi valid after jtag_tck high	13.8		13.8		ns
JA9	$t_{su(tmsV-tckH)}$	Setup time, jtag_tms valid before jtag_tck high	13.8		13.8		ns
JA10	$t_{h(tmsV-tckH)}$	Hold time, jtag_tms valid after jtag_tck high	13.8		13.8		ns

(1) Maximum cycle jitter supported by jtag _tck input clock.
(2) The timing requirements are assured for the cycle jitter and duty cycle error conditions specified.

Copyright © 2009–2014, Texas Instruments Incorporated

Table 6-160. JTAG Switching Characteristics Adaptive Clock Mode(1)

NO.	PARAMETER		1.8 V		3.3 V		UNIT
			MIN	MAX	MIN	MAX	
JA1	$t_{c(rtck)}$	Cycle time	20		20		ns
JA2	$t_{w(rtckL)}$	Typical pulse duration, jtag_rtck low	10		10		ns
JA3	$t_{w(rtckH)}$	Typical pulse duration, jtag_rtck high	10		10		ns
	$t_{dc(rtck)}$	Duty cycle error, jtag_rtck	-2500	2500	-2500	2500	ps
	$t_{j(rtck)}$	Jitter standard deviation		33.33		33.33	ps
	$t_{R(rtck)}$	Rise time, jtag_rtck		4		4	ns
	$t_{F(rtck)}$	Fall time, jtag_rtck		4		4	ns
JA11	$t_{d(rtckL-tdoV)}$	Delay time, jtag_rtck low to jtag_tdo valid	-14.6	14.6	-14.6	14.6	ns
	$t_{R(tdo)}$	Rise time, jtag_tdo,		4		4	ns
	$t_{F(tdo)}$	Fall time, jtag_tdo		4		4	ns

(1) The jitter probability density can be approximated by a Gaussian function.

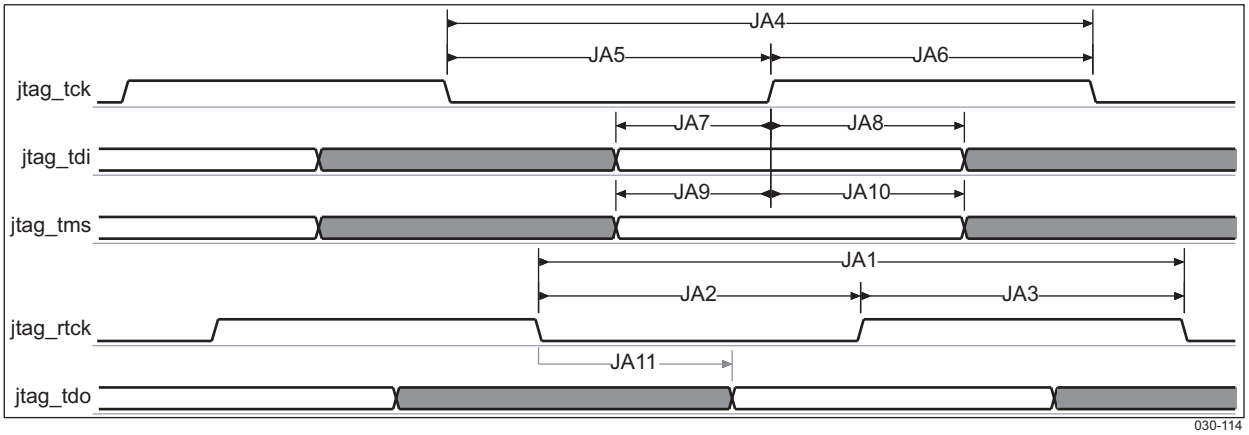

Figure 6-74. JTAG Interface Timing Adaptive Clock Mode

Copyright © 2009–2014, Texas Instruments Incorporated

7 Device and Documentation Support

7.1 Device Support

7.1.1 Development Support

TI offers an extensive line of development tools, including tools to evaluate the performance of the processors, generate code, develop algorithm implementations, and fully integrate and debug software and hardware modules. The tool's support documentation is electronically available within the Code Composer Studio™ Integrated Development Environment (IDE).

7.1.1.1 Getting Started and Next Steps

The following products support development of the AM3517/05 device applications:

Software Development Tools:

- Code Composer Studio™ Integrated Development Environment (IDE) for Sitara ARM Processors: an optimizing C/C++ compiler, source code editor, project build environment, debugger, profiler, and many other features.
- FlashTool for AM35x, AM37x, DM37x and OMAP35x Devices: a Windows-based application that can be used to transfer binary images from a host PC to TI Sitara AM35x, AM37x, DM37x and OMAP35x target platforms.
- Pin Mux Utility for ARM Microprocessors: a Windows-based software tool which provides a Graphical User Interface for configuring pin multiplexing settings, resolving conflicts and specifying I/O cell characteristics for TI ARM MPUs.
- Power Estimation Tool (PET): provides users the ability to gain insight in to the power consumption of select Sitara and OMAP processors.

Hardware Development Tools:

- Uniflash Standalone Flash Tool for TI Microcontrollers (MCUs) and Sitara Processors: a standalone tool used to program on-chip flash memory on TI MCUs and on-board flash memory for Sitara processors.
- XDS200 Price/Performance-balanced Debug Probe: a JTAG emulator for TI embedded processors.
- XDS560 High Performance Debug Probe: combines state-of-the-art silicon, hardware, and software technology to provide the best hardware debug capabilities.

For a complete listing of development-support tools for the AM3517/05 platform, visit the Texas Instruments website at www.ti.com. For information on pricing and availability, contact the nearest TI field sales office or authorized distributor.

7.1.2 Device Nomenclature

To designate the stages in the product development cycle, TI assigns prefixes to the part numbers of all AM3517/05 processors and support tools. Each device has one of three prefixes: X, P, or null (no prefix). Texas Instruments recommends two of three possible prefix designators for its support tools: TMDX and TMDS. These prefixes represent evolutionary stages of product development from engineering prototypes (TMDX) through fully qualified production devices/tools (TMDS).

Device development evolutionary flow:

X Experimental device that is not necessarily representative of the final devices electrical specifications and may not use production assembly flow. (TMX definition)

P Prototype device that is not necessarily the final silicon die and may not necessarily meet final electrical specifications. (TMP definition)

null Production version of the silicon die that is fully qualified. (TMS definition)

Support tool development evolutionary flow:

Copyright © 2009–2014, Texas Instruments Incorporated

TMDX Development support product that has not yet completed Texas Instruments internal qualification testing.

TMDS Fully qualified development support product.

TMX and TMP devices and TMDX development-support tools are shipped against the following disclaimer:

Developmental product is intended for internal evaluation purposes.

Production devices and TMDS development-support tools have been characterized fully, and the quality and reliability of the device have been demonstrated fully. TIs standard warranty applies.

Predictions show that prototype devices (X or P), have a greater failure rate than the standard production devices. Texas Instruments recommends that these devices not be used in any production system because their expected end-use failure rate still is undefined. Only qualified production devices are to be used.

For additional description of the device nomenclature markings, see the *AM35x ARM Microprocessor Silicon Errata* (SPRZ306).

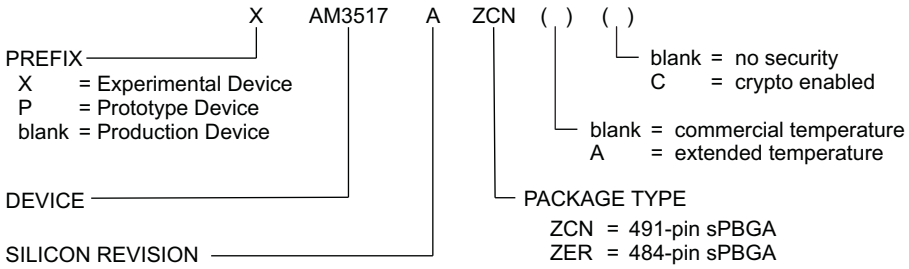

Figure 7-1. Device Nomenclature

7.2 Documentation Support

7.2.1 Related Documentation

The following documents describe the AM3517/05 device. Copies of these documents are available on the Internet at www.ti.com. Tip: Enter the literature number in the search box provided at www.ti.com.

The current documentation that describes the AM3517/05 Sitara processor, related peripherals, and other technical collateral, is available in the product folder at: www.ti.com.

SPRUGR0 **AM35x ARM Microprocessor Technical Reference Manual.** Collection of documents providing detailed information on the Sitara architecture including power, reset, and clock control, interrupts, memory map, and switch fabric interconnect. Detailed information on the microprocessor unit (MPU) subsystem as well a functional description of the peripherals supported on AM3517/05 devices is also included.

The following documents are related to the AM3517/05 device. Copies of these documents can be obtained directly from the internet or from your Texas Instruments representative.

Cortex-A8 Technical Reference Manual. This is the technical reference manual for the Cortex-A8 processor. A copy of this document can be obtained via the internet at http://infocenter.arm.com. See the *AM35x ARM Microprocessor Silicon Errata* (SPRZ306) to determine the revision of the Cortex-A8 core used on your device.

ARM Core Cortex™-A8 (AT400/AT401) Errata Notice. Provides a list of advisories for the different revisions of the Cortex-A8 processor. Contact your TI representative for a copy of this document. See the *AM35x ARM Microprocessor Silicon Errata* (SPRZ306) to determine the revision of the Cortex-A8 core used on your device.

Copyright © 2009–2014, Texas Instruments Incorporated

7.3 Related Links

Table 7-1 lists quick access links. Categories include technical documents, support and community resources, tools and software, and quick access to sample or buy.

Table 7-1. Related Links

PARTS	PRODUCT FOLDER	SAMPLE & BUY	TECHNICAL DOCUMENTS	TOOLS & SOFTWARE	SUPPORT & COMMUNITY
AM3517	Click here	Click here	Click here	Click here	Click here
AM3505	Click here	Click here	Click here	Click here	Click here

7.4 Community Resources

The following links connect to TI community resources. Linked contents are provided "AS IS" by the respective contributors. They do not constitute TI specifications and do not necessarily reflect TI's views; see TI's Terms of Use.

TI E2E™ Online Community ***TI's Engineer-to-Engineer (E2E) Community.*** Created to foster collaboration among engineers. At e2e.ti.com, you can ask questions, share knowledge, explore ideas and help solve problems with fellow engineers.

TI Embedded Processors Wiki ***Texas Instruments Embedded Processors Wiki.*** Established to help developers get started with Embedded Processors from Texas Instruments and to foster innovation and growth of general knowledge about the hardware and software surrounding these devices.

7.5 Trademarks

PowerVR SGX is a trademark of Imagination Technologies Ltd.
Sitara, Via Channel, E2E are trademarks of Texas Instruments.
NEON is a trademark of ARM Ltd or its subsidiaries.
Cortex, Jazelle are registered trademarks of ARM Ltd or its subsidiaries.
All other trademarks are the property of their respective owners.

7.6 Electrostatic Discharge Caution



This integrated circuit can be damaged by ESD. Texas Instruments recommends that all integrated circuits be handled with appropriate precautions. Failure to observe proper handling and installation procedures can cause damage.

ESD damage can range from subtle performance degradation to complete device failure. Precision integrated circuits may be more susceptible to damage because very small parametric changes could cause the device not to meet its published specifications.

Copyright © 2009–2014, Texas Instruments Incorporated

8 Mechanical Packaging and Orderable Information

8.1 Package Option Addendum

The following pages include mechanical packaging and orderable information. This information is the most current data available for the designated devices. This data is subject to change without notice and revision of this document. For browser-based versions of this data sheet, refer to the left-hand navigation.

Copyright © 2009–2014, Texas Instruments Incorporated

PACKAGING INFORMATION

Orderable Device	Status (1)	Package Type	Package Drawing	Pins	Package Qty	Eco Plan (2)	Lead finish/ Ball material (6)	MSL Peak Temp (3)	Op Temp (°C)	Device Marking (4/5)	Samples
AM3505AZCN	ACTIVE	NFBGA	ZCN	491	90	RoHS & Green	SNAGCU	Level-3-260C-168 HR	0 to 90	AM3505AZCN 532	Samples
AM3505AZCNA	ACTIVE	NFBGA	ZCN	491	90	RoHS & Green	SNAGCU	Level-3-260C-168 HR	-40 to 105	AM3505AZCNA 532	Samples
AM3505AZCNAC	ACTIVE	NFBGA	ZCN	491	90	RoHS & Green	SNAGCU	Level-3-260C-168 HR	-40 to 105	AM3505AZCNAC 532	Samples
AM3505AZCNC	ACTIVE	NFBGA	ZCN	491	90	RoHS & Green	SNAGCU	Level-3-260C-168 HR	0 to 90	AM3505AZCNC 532	Samples
AM3505AZER	ACTIVE	BGA	ZER	484	60	RoHS & Green	SNAGCU	Level-3-260C-168 HR	0 to 90	AM3505AZER 532	Samples
AM3505AZERA	ACTIVE	BGA	ZER	484	60	RoHS & Green	SNAGCU	Level-3-260C-168 HR	-40 to 105	AM3505AZERA 532	Samples
AM3517AZCN	ACTIVE	NFBGA	ZCN	491	90	RoHS & Green	SNAGCU	Level-3-260C-168 HR	0 to 90	AM3517AZCN 532	Samples
AM3517AZCNA	ACTIVE	NFBGA	ZCN	491	90	RoHS & Green	SNAGCU	Level-3-260C-168 HR	-40 to 105	AM3517AZCNA 532	Samples
AM3517AZCNAC	ACTIVE	NFBGA	ZCN	491	90	RoHS & Green	SNAGCU	Level-3-260C-168 HR	-40 to 105	AM3517AZCNAC 532	Samples
AM3517AZER	ACTIVE	BGA	ZER	484	60	RoHS & Green	SNAGCU	Level-3-260C-168 HR	0 to 90	AM3517AZER 532	Samples
AM3517AZERA	ACTIVE	BGA	ZER	484	60	RoHS & Green	SNAGCU	Level-3-260C-168 HR	-40 to 105	AM3517AZERA 532	Samples
AM3517AZERC	ACTIVE	BGA	ZER	484	60	RoHS & Green	SNAGCU	Level-3-260C-168 HR	0 to 90	AM3517AZERC 532	Samples

(1) The marketing status values are defined as follows:
ACTIVE: Product device recommended for new designs.
LIFEBUY: TI has announced that the device will be discontinued, and a lifetime-buy period is in effect.
NRND: Not recommended for new designs. Device is in production to support existing customers, but TI does not recommend using this part in a new design.
PREVIEW: Device has been announced but is not in production. Samples may or may not be available.
OBSOLETE: TI has discontinued the production of the device.

(2) **RoHS:** TI defines "RoHS" to mean semiconductor products that are compliant with the current EU RoHS requirements for all 10 RoHS substances, including the requirement that RoHS substance do not exceed 0.1% by weight in homogeneous materials. Where designed to be soldered at high temperatures, "RoHS" products are suitable for use in specified lead-free processes. TI may reference these types of products as "Pb-Free".

RoHS Exempt: TI defines "RoHS Exempt" to mean products that contain lead but are compliant with EU RoHS pursuant to a specific EU RoHS exemption.
Green: TI defines "Green" to mean the content of Chlorine (Cl) and Bromine (Br) based flame retardants meet JS709B low halogen requirements of <=1000ppm threshold. Antimony trioxide based flame retardants must also meet the <=1000ppm threshold requirement.

(3) MSL, Peak Temp. - The Moisture Sensitivity Level rating according to the JEDEC industry standard classifications, and peak solder temperature.

(4) There may be additional marking, which relates to the logo, the lot trace code information, or the environmental category on the device.

(5) Multiple Device Markings will be inside parentheses. Only one Device Marking contained in parentheses and separated by a "~" will appear on a device. If a line is indented then it is a continuation of the previous line and the two combined represent the entire Device Marking for that device.

(6) Lead finish/Ball material - Orderable Devices may have multiple material finish options. Finish options are separated by a vertical ruled line. Lead finish/Ball material values may wrap to two lines if the finish value exceeds the maximum column width.

Important Information and Disclaimer: The information provided on this page represents TI's knowledge and belief as of the date that it is provided. TI bases its knowledge and belief on information provided by third parties, and makes no representation or warranty as to the accuracy of such information. Efforts are underway to better integrate information from third parties. TI has taken and continues to take reasonable steps to provide representative and accurate information but may not have conducted destructive testing or chemical analysis on incoming materials and chemicals. TI and TI suppliers consider certain information to be proprietary, and thus CAS numbers and other limited information may not be available for release.

In no event shall TI's liability arising out of such information exceed the total purchase price of the TI part(s) at issue in this document sold by TI to Customer on an annual basis.

TRAY

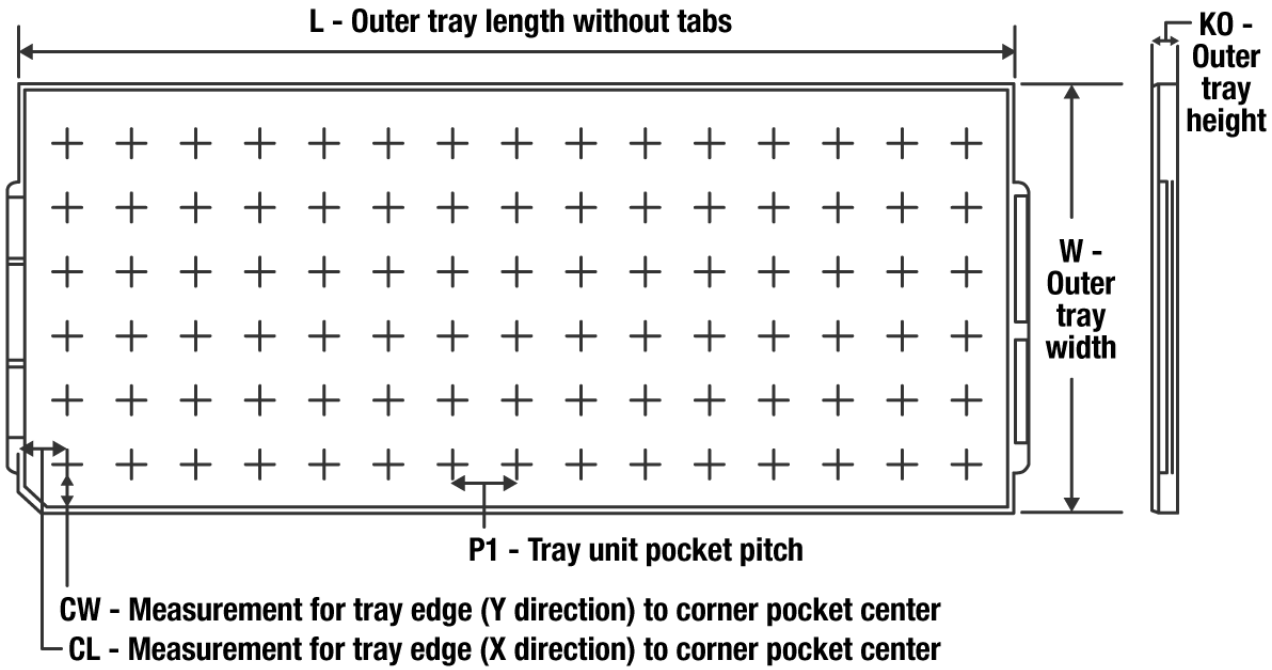

Chamfer on Tray corner indicates Pin 1 orientation of packed units.

*All dimensions are nominal

Device	Package Name	Package Type	Pins	SPQ	Unit array matrix	Max temperature (°C)	L (mm)	W (mm)	K0 (µm)	P1 (mm)	CL (mm)	CW (mm)
AM3505AZCN	ZCN	NFBGA	491	90	6 X 15	150	315	135.9	7620	19.5	21	19.2
AM3505AZCNA	ZCN	NFBGA	491	90	6 X 15	150	315	135.9	7620	19.5	21	19.2
AM3505AZCNAC	ZCN	NFBGA	491	90	6 X 15	150	315	135.9	7620	19.5	21	19.2
AM3505AZCNC	ZCN	NFBGA	491	90	6 X 15	150	315	135.9	7620	19.5	21	19.2
AM3505AZER	ZER	BGA	484	60	5 X 12	150	315	135.9	7620	25.5	17.25	16.95
AM3505AZERA	ZER	BGA	484	60	5 X 12	150	315	135.9	7620	25.5	17.25	16.95
AM3517AZCN	ZCN	NFBGA	491	90	6 X 15	150	315	135.9	7620	19.5	21	19.2
AM3517AZCNA	ZCN	NFBGA	491	90	6 X 15	150	315	135.9	7620	19.5	21	19.2
AM3517AZCNAC	ZCN	NFBGA	491	90	6 X 15	150	315	135.9	7620	19.5	21	19.2
AM3517AZER	ZER	BGA	484	60	5 X 12	150	315	135.9	7620	25.5	17.25	16.95
AM3517AZERA	ZER	BGA	484	60	5 X 12	150	315	135.9	7620	25.5	17.25	16.95
AM3517AZERC	ZER	BGA	484	60	5 X 12	150	315	135.9	7620	25.5	17.25	16.95

ZER (S–PBGA–N484) PLASTIC BALL GRID ARRAY

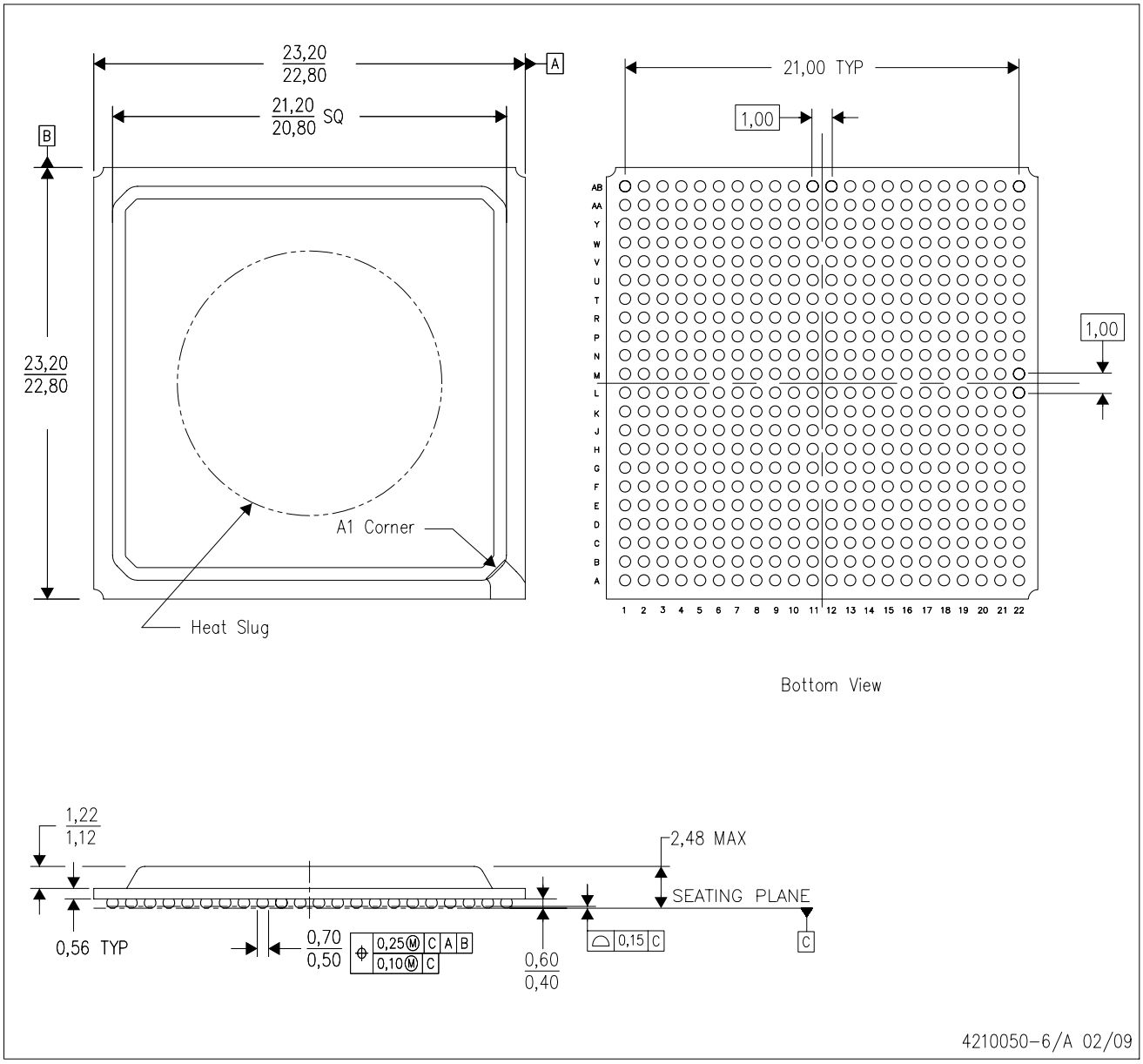

NOTES:
A. All linear dimensions are in millimeters.
B. This drawing is subject to change without notice.
C. Falls within JEDEC MO–151
D. Thermally enhanced molded plastic package with heat slug (HSL).
E. This is a Pb–free solder ball design.

ZCN (S–PBGA–N491) PLASTIC BALL GRID ARRAY

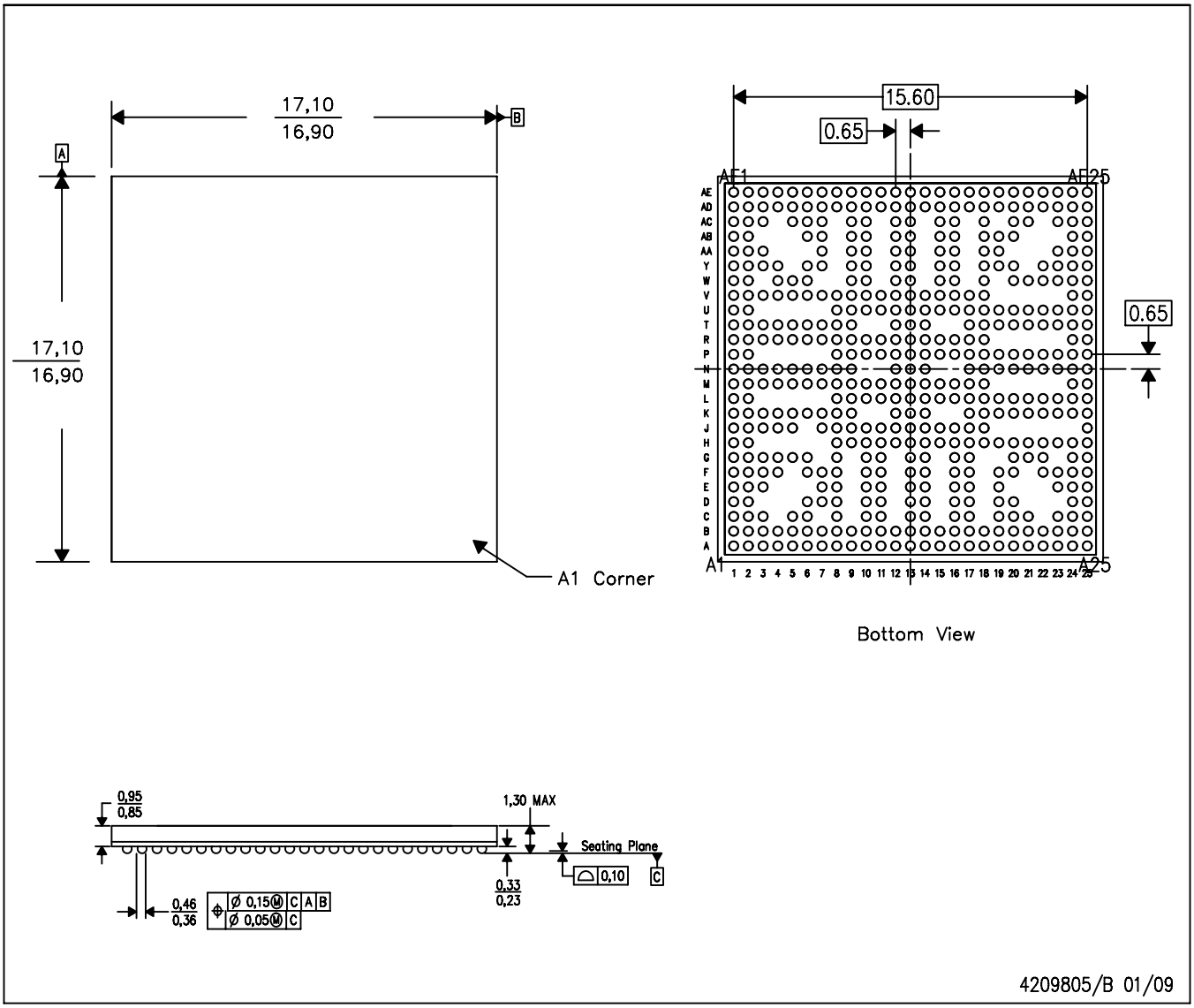

NOTES:
A. All linear dimensions are in millimeters. Dimensioning and tolerancing per ASME Y14.5M–1994.
B. This drawing is subject to change without notice.
C. nFBGA package configuration.
D. This is a Pb–free solder ball design.

IMPORTANT NOTICE AND DISCLAIMER

TI PROVIDES TECHNICAL AND RELIABILITY DATA (INCLUDING DATA SHEETS), DESIGN RESOURCES (INCLUDING REFERENCE DESIGNS), APPLICATION OR OTHER DESIGN ADVICE, WEB TOOLS, SAFETY INFORMATION, AND OTHER RESOURCES “AS IS” AND WITH ALL FAULTS, AND DISCLAIMS ALL WARRANTIES, EXPRESS AND IMPLIED, INCLUDING WITHOUT LIMITATION ANY IMPLIED WARRANTIES OF MERCHANTABILITY, FITNESS FOR A PARTICULAR PURPOSE OR NON-INFRINGEMENT OF THIRD PARTY INTELLECTUAL PROPERTY RIGHTS.

These resources are intended for skilled developers designing with TI products. You are solely responsible for (1) selecting the appropriate TI products for your application, (2) designing, validating and testing your application, and (3) ensuring your application meets applicable standards, and any other safety, security, regulatory or other requirements.

These resources are subject to change without notice. TI grants you permission to use these resources only for development of an application that uses the TI products described in the resource. Other reproduction and display of these resources is prohibited. No license is granted to any other TI intellectual property right or to any third party intellectual property right. TI disclaims responsibility for, and you will fully indemnify TI and its representatives against, any claims, damages, costs, losses, and liabilities arising out of your use of these resources.

TI’s products are provided subject to TI’s Terms of Sale or other applicable terms available either on ti.com or provided in conjunction with such TI products. TI’s provision of these resources does not expand or otherwise alter TI’s applicable warranties or warranty disclaimers for TI products.

TI objects to and rejects any additional or different terms you may have proposed.

Mailing Address: Texas Instruments, Post Office Box 655303, Dallas, Texas 75265
Copyright © 2022, Texas Instruments Incorporated