System-Side Impedance Track™ Fuel Gauge With Direct Battery Connection

FEATURES

- **Battery Fuel Gauge for 1-Series Li-Ion Applications**
- **Resides on System Main Board**
  - **Works with Embedded or Removable Battery Packs**
  - **Uses *PACK*+, *PACK*–, and *T* Battery Terminals**
  - **Can be Powered Directly From Battery Pack (no LDO required)**
- **Microcontroller Peripheral Provides:**
  - **Accurate Battery Fuel Gauging**
  - ***Battery Low* Interrupt Warning**
  - ***Battery Insertion* Indicator**
  - **96 Bytes of Non-Volatile Scratch Pad FLASH**
- **Battery Fuel Gauging Based on Patented Impedance Track™ Technology**
  - **Models Battery Discharge Curve for Accurate Time-To-Empty Predictions**
  - **Automatically Adjusts for Battery Aging, Battery Self-Discharge, and Temperature/Rate Inefficiencies**
  - **Low-Value Sense Resistor (10 mΩ or less)**
- **I^2C™ for Connection to System Microcontroller Port**
- **Small 12-pin 2,5 mm × 4 mm SON Package**

APPLICATIONS

- **Smartphones**
- **PDAs**
- **Digital Still and Video Cameras**
- **Handheld Terminals**
- **MP3 or Multimedia Players**

DESCRIPTION

The Texas Instruments bq27510 system-side Li-Ion battery fuel gauge is a microcontroller peripheral that provides fuel gauging for single-cell Li-Ion battery packs. The device requires little system microcontroller firmware development. The bq27510 resides on the system's main board and manages an embedded battery (non-removable) or a removable battery pack.

The bq27510 uses the patented Impedance Track™ algorithm for fuel gauging, and provides information such as remaining battery capacity (mAh), state-of-charge (%), run-time to empty (min.), battery voltage (mV), and temperature (°C).

Battery fuel gauging with the bq27510 requires only PACK+ (P+), PACK– (P–), and Thermistor (T) connections to a removable battery pack or embedded battery.

TYPICAL APPLICATION

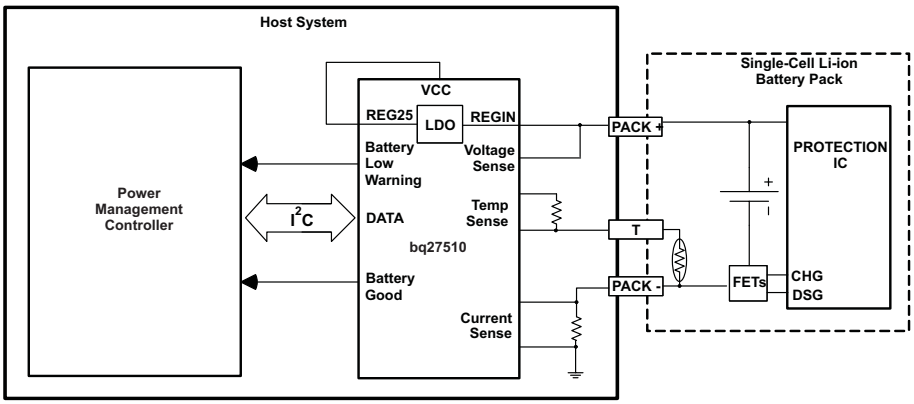

Please be aware that an important notice concerning availability, standard warranty, and use in critical applications of Texas Instruments semiconductor products and disclaimers thereto appears at the end of this data sheet.

Impedance Track is a trademark of Texas Instruments.
I2C is a trademark of Phillips Corporation.

PRODUCTION DATA information is current as of publication date. Products conform to specifications per the terms of the Texas Instruments standard warranty. Production processing does not necessarily include testing of all parameters.

Copyright © 2009, Texas Instruments Incorporated

These devices have limited built-in ESD protection. The leads should be shorted together or the device placed in conductive foam during storage or handling to prevent electrostatic damage to the MOS gates.

DEVICE INFORMATION

AVAILABLE OPTIONS

PART NUMBER	PACKAGE(1)	TA	COMMUNICATION FORMAT	TAPE and REEL QUANTITY
bq27510DRZR-G1	12-pin, 2,5-mm × 4-mm SON	–40°C to 85°C	I^2C	3000
bq27510DRZT-G1				250

(1) For the most current package and ordering information see the Package Option Addendum at the end of this document; or, see the TI website at www.ti.com.

PIN DIAGRAM

TERMINAL FUNCTIONS

TERMINAL		TYPE(1)	DESCRIPTION
NAME	NO.		
BI/TOUT	1	I/O	Battery-insertion detection input. Power pin for pack thermistor network. Thermistor-multiplexer control pin. Push-pull I/O. Use with pull-up resistor >1MΩ (1.8 MΩ typical).
REG25	2	P	2.5 V output voltage of the internal integrated LDO. Connect a 0.47µF ceramic capacitor.
REGIN	3	P	The input voltage for the internal integrated LDO. Connect a 0.1µF ceramic capacitor.
BAT	4	I	Cell voltage measurement input. ADC input.
Vcc	5	P	Processor power input. The 0.47µF ceramic capacitor connected to REG25 should be close to Vcc.
Vss	6	P	Device ground
SRP	7	IA	Analog input pin connected to the internal coulomb counter where SRP is nearest the system PACK– connection. Connect to 5-mΩ to 20-mΩ sense resistor.
SRN	8	IA	Analog input pin connected to the internal coulomb counter where SRN is nearest the Vss connection. Connect to a 5-mΩ to 20-mΩ sense resistor.
TS	9	IA	Pack thermistor voltage sense (use 103AT-type thermistor). ADC input
SDA	10	I/O	Slave I^2C serial communications data line for communication with system (Master). Open-drain I/O. Use with 10-kΩ pull-up resistor (typical).
SCL	11	I	Slave I^2C serial communications clock input line for communication with system (Master). Open-drain I/O. Use with 10-kΩ pull-up resistor (typical).
BAT_LOW/ BAT_GD	12	O	Battery-good or Battery-low output indicator. Desired function polarity selected through the Operation Configuration register. Open-drain output

(1) I/O = Digital input/output; IA = Analog input; P = Power connection.

Copyright © 2009, Texas Instruments Incorporated

ELECTRICAL SPECIFICATIONS

ABSOLUTE MAXIMUM RATINGS

over operating free-air temperature range (unless otherwise noted)[1]

		VALUE	UNIT
V_{REGIN}	Regulator input voltage	–0.3 to 24	V
V_{CC}	Supply voltage range	–0.3 to 2.75	V
V_{IOD}	Open-drain I/O pins (SDA, SCL, BAT_LOW/BAT_GD)	–0.3 to 6	V
V_{BAT}	BAT input pin	–0.3 to 6	V
V_I	Input voltage range to all other pins (TS, SRP, SRN, BI/TOUT)	–0.3 to V_{CC} + 0.3	V
T_F	Functional temperature range	–40 to 100	°C
T_{STG}	Storage temperature range	–65 to 150	°C
ESD	Human Body Model (HBM), BAT pin	1.5	KV
	Human Body Model (HBM), all other pins	2	

(1) Stresses beyond those listed under *absolute maximum ratings* may cause permanent damage to the device. These are stress ratings only, and functional operation of the device at these or any other conditions beyond those indicated under *recommended operating conditions* is not implied. Exposure to absolute-maximum-rated conditions for extended periods may affect device reliability.

DISSIPATION RATINGS

PACKAGE	T_A ≤ 40°C POWER RATING	DERATING FACTOR T_A ≤ 40°C	$R_{\theta JA}$
12-pin DRZ[1]	482 mW	5.67 mW/°C	176°C/W

(1) This data is based on using a 4-layer JEDEC high-K board with the exposed die pad connected to a Cu pad on the board. The board pad is connected to the ground plane by a 2- x 2-via matrix.

RECOMMENDED OPERATING CONDITIONS

T_A = 25°C and V_{REGIN} += V_{BAT} = 3.6 V (unless otherwise noted)

PARAMETER		TEST CONDITION	MIN	TYP	MAX	UNIT
V_{REGIN}	Supply voltage	No operating restrictions	2.7		5.5	V
		No FLASH writes	2.45		2.7	
I_{CC}	Normal operating mode current	Fuel gauge in NORMAL mode, I_{LOAD} > ***Sleep Current***		103		µA
I_{SLP}	Low-power operating mode current	Fuel gauge in SLEEP mode. I_{LOAD} < ***Sleep Current***		18		µA
I_{HIB}	Hibernate operating mode current	Fuel gauge in HIBERNATE mode. I_{LOAD} < ***Hibernate Current***		4		µA
V_{OL}	Output voltage low (Pins 1, 10, 11, 12)	I_{OL} = 3 mA			0.4	V
$V_{OH(PP)}$	Output high voltage (Pin 1)	I_{OH} = –1 mA	V_{CC}–0.5			V
$V_{OH(OD)}$	Output high voltage (Pins 10, 11, 12)	External pull-up resistor connected to Vcc	V_{CC}–0.5			V
V_{IL}	Input voltage low (Pins 1, 10, 11, 12)		–0.3		0.6	V
$V_{IH(OD)}$	Input voltage high (Pins 1, 10, 11, 12)		1.2		6	V
V_{A1}	Input voltage range (TS)		V_{SS}–0.125		2	V
V_{A2}	Input voltage range (BAT)		V_{SS}–0.125		5	V
V_{A3}	Input voltage range (SRP, SRN)		V_{SS}–0.125		0.125	V
t_{PUCD}	Power-up communication delay			250		ms

POWER-ON RESET

T_A = –40°C to 85°C, C_{REG} = 0.47 µF, 2.45 V < V_{REGIN} = V_{BAT} < 5.5 V; typical values at T_A = 25°C and V_{REGIN} = V_{BAT} = 3.6 V (unless otherwise noted)

PARAMETER		TEST CONDITIONS	MIN	TYP	MAX	UNIT
V_{IT+}	Positive-going battery voltage input at V_{CC}		2.05	2.20	2.31	V
V_{HYS}	Power-on reset hysteresis		45	115	185	mV

Copyright © 2009, Texas Instruments Incorporated

2.5 V LDO REGULATOR[1]

T_A = –40°C to 85°C, C_{REG} = 0.47 µF, 2.45 V < V_{REGIN} = V_{BAT} < 5.5 V; typical values at T_A = 25°C and V_{REGIN} = V_{BAT} = 3.6 V (unless otherwise noted)

PARAMETER		TEST CONDITION		MIN	NOM	MAX	UNIT
V_{REG25}	Regulator output voltage	2.7 V ≤ V_{REGIN} ≤ 5.5 V, I_{OUT} ≤ 16mA	T_A = –40°C to 85°C	2.42	2.48	2.57	V
		2.45 V ≤ V_{REGIN} < 2.7 V (low battery), I_{OUT} ≤ 3mA	T_A = –40°C to 85°C	2.40			V
V_{DO}	Regulator dropout voltage	2.7 V, I_{OUT} ≤ 16 mA	T_A = –40°C to 85°C			280	mV
		2.45 V, I_{OUT} ≤ 3 mA				50	
$\Delta V_{REGTEMP}$	Regulator output change with temperature	V_{REGIN} = 3.6 V, I_{OUT} = 16 mA	T_A = –40°C to 85°C		0.3%		
$\Delta V_{REGLINE}$	Line regulation	2.7 V ≤ V_{REGIN} ≤ 5.5 V, I_{OUT} = 16 mA			11	25	mV
$\Delta V_{REGLOAD}$	Load regulation	0.2 mA ≤ I_{OUT} ≤ 3 mA, V_{REGIN} = 2.45 V			34	40	mV
		3 mA ≤ I_{OUT} ≤ 16 mA, V_{REGIN} = 2.7 V			31		
I_{SHORT}[2]	Short circuit current limit	V_{REG25} = 0 V	T_A = –40°C to 85°C			250	mA

(1) LDO output current, IOUT, is the sum of internal and external load currents.
(2) Assured by design. Not production tested.

INTERNAL TEMPERATURE SENSOR CHARACTERISTICS

T_A = –40°C to 85°C, C_{REG} = 0.47µF, 2.45 V < V_{REGIN} = V_{BAT} < 5.5 V; typical values at T_A = 25°C and V_{REGIN} = V_{BAT} = 3.6 V (unless otherwise noted)

PARAMETER		TEST CONDITIONS	MIN	TYP	MAX	UNIT
G_{TEMP}	Temperature sensor voltage gain			–2		mV/°C

HIGH FREQUENCY OSCILLATOR

T_A = –40°C to 85°C, C_{REG} = 0.47µF, 2.45 V < V_{REGIN} = V_{BAT} < 5.5 V; typical values at T_A = 25°C and V_{REGIN} = V_{BAT} = 3.6 V (unless otherwise noted)

PARAMETER		TEST CONDITIONS	MIN	TYP	MAX	UNIT
f_{OSC}	Operating frequency			2.097		MHz
f_{EIO}	Frequency error[1] [2]	T_A = 0°C to 60°C	–2.0%	0.38%	2.0%	
		T_A = –20°C to 70°C	–3.0%	0.38%	3.0%	
		T_A = –40°C to 85°C	-4.5%	0.38%	4.5%	
t_{SXO}	Start-up time[3]			2.5	5	ms

(1) The frequency error is measured from 2.097 MHz.
(2) The frequency drift is included and measured from the trimmed frequency at V_{CC} = 2.5 V, T_A = 25°C.
(3) The startup time is defined as the time it takes for the oscillator output frequency to be ±3% of typical oscillator frequency.

Copyright © 2009, Texas Instruments Incorporated

LOW FREQUENCY OSCILLATOR

T_A = –40°C to 85°C, C_{REG} = 0.47 µF, 2.45 V < V_{REGIN} = V_{BAT} < 5.5 V; typical values at T_A = 25°C and V_{REGIN} = V_{BAT} = 3.6 V (unless otherwise noted)

PARAMETER		TEST CONDITIONS	MIN	TYP	MAX	UNIT
f_{OSC}	Operating frequency			32.768		KHz
f_{EIO}	Frequency error(1) (2)	T_A = 0°C to 60°C	–1.5%	0.25%	1.5%	
		T_A = –20°C to 70°C	–2.5%	0.25%	2.5%	
		T_A = –40°C to 85°C	-4.0%	0.25%	4.0%	
t_{SXO}	Start-up time(3)				500	µs

(1) The frequency drift is included and measured from the trimmed frequency at V_{CC} = 2.5 V, T_A = 25°C.
(2) The frequency error is measured from 32.768 KHz.
(3) The startup time is defined as the time it takes for the oscillator output frequency to be ±3% of typical oscillator frequency.

INTEGRATING ADC (COULOMB COUNTER) CHARACTERISTICS

T_A = –40°C to 85°C, C_{REG} = 0.47 µF, 2.45 V < V_{REGIN} = V_{BAT} < 5.5 V; typical values at T_A = 25°C and V_{REGIN} = V_{BAT} = 3.6 V (unless otherwise noted)

PARAMETER		TEST CONDITIONS	MIN	TYP	MAX	UNIT
V_{SR_IN}	Input voltage range, $V_{(SRN)}$ and $V_{(SRP)}$	V_{SR} = $V_{(SRN)}$ – $V_{(SRP)}$	–0.125		0.125	V
t_{SR_CONV}	Conversion time	Single conversion		1		s
	Resolution		14		15	bits
V_{SR_OS}	Input offset			140		µV
I_{NL}	Integral nonlinearity error			±0.007	±0.034	FSR
Z_{SR_IN}	Effective input resistance(1)		2.5			MΩ
I_{SR_LKG}	Input leakage current(1)				0.3	µA

(1) Assured by design. Not production tested.

ADC (TEMPERATURE AND CELL MEASUREMENT) CHARACTERISTICS

T_A = –40°C to 85°C, C_{REG} = 0.47 µF, 2.45 V < V_{REGIN} = V_{BAT} < 5.5 V; typical values at T_A = 25°C and V_{REGIN} = V_{BAT} = 3.6 V (unless otherwise noted)

PARAMETER		TEST CONDITIONS	MIN	TYP	MAX	UNIT
V_{ADC_IN}	Input voltage range		–0.2		1	V
t_{ADC_CONV}	Conversion time				125	ms
	Resolution		14		15	bits
V_{ADC_OS}	Input offset			1		mV
Z_{ADC1}	Effective input resistance (TS) (1)		8			MΩ
Z_{ADC2}	Effective input resistance (BAT)(1)	bq27510 not measuring cell voltage	8			MΩ
		bq27510 measuring cell voltage		100		kΩ
I_{ADC_LKG}	Input leakage current(1)				0.3	µA

(1) Assured by design. Not production tested.

DATA FLASH MEMORY CHARACTERISTICS

T_A = –40°C to 85°C, C_{REG} = 0.47µF, 2.45 V < V_{REGIN} = V_{BAT} < 5.5 V; typical values at T_A = 25°C and V_{REGIN} = V_{BAT} = 3.6 V (unless otherwise noted)

PARAMETER		TEST CONDITIONS	MIN	TYP	MAX	UNIT
t_{DR}	Data retention(1)		10			Years
	Flash programming write-cycles (1)		20,000			Cycles
$t_{WORDPROG)}$	Word programming time(1)				2	ms
$I_{CCPROG)}$	Flash-write supply current(1)			5	10	mA

(1) Assured by design. Not production tested.

Copyright © 2009, Texas Instruments Incorporated

I²C-COMPATIBLE INTERFACE COMMUNICATION TIMING CHARACTERISTICS

T_A = –40°C to 85°C, 2.4 V < V_{CC} < 2.6 V; typical values at T_A = 25°C and V_{CC} = 2.5 V (unless otherwise noted)

PARAMETER		TEST CONDITIONS	MIN	TYP	MAX	UNIT
t_r	SCL/SDA rise time				300	ns
t_f	SCL/SDA fall time				300	ns
$t_{w(H)}$	SCL pulse width (high)		600			ns
$t_{w(L)}$	SCL pulse width (low)		1.3			µs
$t_{su(STA)}$	Setup for repeated start		600			ns
$t_{d(STA)}$	Start to first falling edge of SCL		600			ns
$t_{su(DAT)}$	Data setup time		100			ns
$t_{h(DAT)}$	Data hold time		0			ns
$t_{su(STOP)}$	Setup time for stop		600			ns
t_{BUF}	Bus free time between stop and start		66			µs
f_{SCL}	Clock frequency				400	kHz

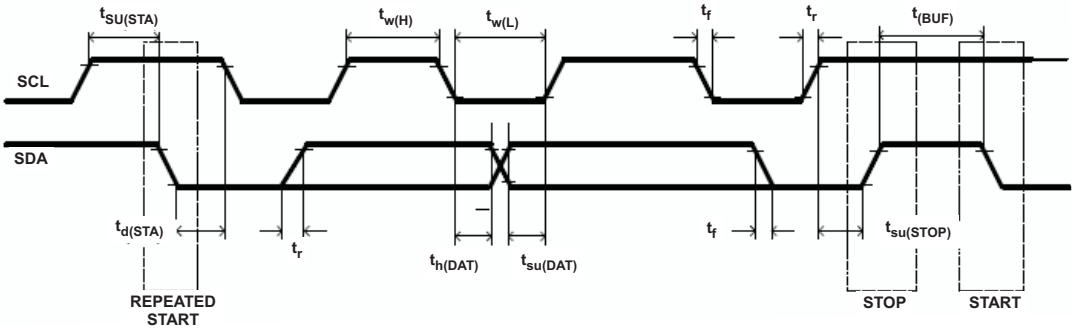

Figure 1. I²C-Compatible Interface Timing Diagrams

Copyright © 2009, Texas Instruments Incorporated

GENERAL DESCRIPTION

The bq27510 accurately predicts the battery capacity and other operational characteristics of a single Li-based rechargeable cell. It can be interrogated by a system processor to provide cell information, such as state-of-charge (SOC), time-to-empty (TTE) and time-to-full (TTF).

Information is accessed through a series of commands, called *Standard Commands*. Further capabilities are provided by the additional *Extended Commands* set. Both sets of commands, indicated by the general format *Command( )*, are used to read and write information contained within the bq27510 control and status registers, as well as its data flash locations. Commands are sent from system to gauge using the bq27510's I^2C serial communications engine, and can be executed during application development, pack manufacture, or end-equipment operation.

Cell information is stored in the bq27510 in non-volatile flash memory. Many of these data flash locations are accessible during application development. They cannot, generally, be accessed directly during end-equipment operation. Access to these locations is achieved by either use of the bq27510's companion evaluation software, through individual commands, or through a sequence of data-flash-access commands. To access a desired data flash location, the correct data flash subclass and offset must be known.

The bq27510 provides 96 bytes of user-programmable data flash memory, partitioned into 3 32-byte blocks: **Manufacturer Info Block A, Manufacturer Info Block B**, and **Manufacturer Info Block C**. This data space is accessed through a data flash interface. For specifics on accessing the data flash, see section *Manufacturer Information Blocks.*

The key to the bq27510's high-accuracy gas gauging prediction is Texas Instrument's proprietary Impedance Track™ algorithm. This algorithm uses cell measurements, characteristics, and properties to create state-of-charge predictions that can achieve less than 1% error across a wide variety of operating conditions and over the lifetime of the battery.

The bq27510 measures charge/discharge activity by monitoring the voltage across a small-value series sense resistor (5 mΩ to 20 mΩ typ.) located between the system's Vss and the battery's PACK– terminal. When a cell is attached to the bq27510, cell impedance is computed, based on cell current, cell open-circuit voltage (OCV), and cell voltage under loading conditions.

The bq27510 external temperature sensing is optimized with the use of a high accuracy negative temperature coefficient (NTC) thermistor with R_{25} = 10.0kΩ ±1%. B25/85 = 3435K ± 1% (such as Semitec NTC 103AT). The bq27510 can also be configured to use its internal temperature sensor. When an external thermistor is used, a 18.2k pull up resistor between BT/TOUT and TS pins is also required. The bq27510 uses temperature to monitor the battery-pack environment, which is used for fuel gauging and cell protection functionality.

To minimize power consumption, the bq27510 has several power modes: NORMAL, SLEEP, HIBERNATE, and BAT INSERT CHECK. The bq27510 passes automatically between these modes, depending upon the occurrence of specific events, though a system processor can initiate some of these modes directly. More details can be found in Section *Power Modes*.

NOTE:

FORMATTING CONVENTIONS IN THIS DOCUMENT:

Commands: *italics* with *parentheses* and no breaking spaces, e.g. *RemainingCapacity( ).*

Data Flash: *italics*, **bold**, and *breaking spaces*, e.g. **Design Capacity**.

Register bits and flags: brackets and *italics*, *e.g. [TDA]*

Data flash bits: brackets, *italics* and **bold**, *e.g:* ***[LED1]***

Modes and states: ALL CAPITALS, e.g. UNSEALED mode.

Copyright © 2009, Texas Instruments Incorporated

DATA COMMANDS

Standard Data Commands

The bq27510 uses a series of 2-byte standard commands to enable system reading and writing of battery information. Each standard command has an associated command-code pair, as indicated in Table 1. Because each command consists of two bytes of data, two consecutive I^2C transmissions must be executed both to initiate the command function, and to read or write the corresponding two bytes of data. Additional options for transferring data, such as spooling, are described in Section, *I2C INTERFACE*. Standard commands are accessible in NORMAL operation. Read/Write permissions depend on the active access mode, SEALED or UNSEALED (for details on the SEALED and UNSEALED states, refer to Section *Access Modes*.)

Table 1. Standard Commands

NAME		COMMAND CODE	UNITS	SEALED ACCESS	UNSEALED ACCESS
Control( )	CNTL	0x00 / 0x01	N/A	R/W	R/W
AtRate( )	AR	0x02 / 0x03	mA	R/W	R/W
AtRateTimeToEmpty( )	ARTTE	0x04 / 0x05	Minutes	R	R/W
Temperature( )	TEMP	0x06 / 0x07	0.1K	R	R/W
Voltage( )	VOLT	0x08 / 0x09	mV	R	R/W
Flags( )	FLAGS	0x0a / 0x0b	N/A	R	R/W
NominalAvailableCapacity( )	NAC	0x0c / 0x0d	mAh	R	R/W
FullAvailableCapacity( )	FAC	0x0e / 0x0f	mAh	R	R/W
RemainingCapacity( )	RM	0x10 / 0x11	mAh	R	R/W
FullChargeCapacity( )	FCC	0x12 / 0x13	mAh	R	R/W
AverageCurrent( )	AI	0x14 / 0x15	mA	R	R/W
TimeToEmpty( )	TTE	0x16 / 0x17	Minutes	R	R/W
TimeToFull( )	TTF	0x18 / 0x19	Minutes	R	R/W
StandbyCurrent( )	SI	0x1a / 0x1b	mA	R	R/W
StandbyTimeToEmpty( )	STTE	0x1c / 0x1d	Minutes	R	R/W
MaxLoadCurrent( )	MLI	0x1e / 0x1f	mA	R	R/W
MaxLoadTimeToEmpty( )	MLTTE	0x20 / 0x21	Minutes	R	R/W
AvailableEnergy( )	AE	0x22 / 0x23	mWhr	R	R/W
AveragePower( )	AP	0x24 / 0x25	mW	R	R/W
TTEatConstantPower( )	TTECP	0x26 / 0x27	Minutes	R	R/W
Reserved	RSVD	0x28 / 0x29	N/A	R	R/W
CycleCount( )	CC	0x2a / 0x2b	Counts	R	R/W
StateOfCharge( )	SOC	0x2c / 0x2d	%	R	R/W

Control(): 0x00/0x01

Issuing a *Control( )* command requires a subsequent 2-byte subcommand. These additional bytes specify the particular control function desired. The *Control( )* command allows the system to control specific features of the bq27510 during normal operation and additional features when the bq27510 is in different access modes, as described in Table 2.

Table 2. *Control( )* Subcommands

CNTL FUNCTION	CNTL DATA	SEALED ACCESS	DESCRIPTION
CONTROL_STATUS	0x0000	Yes	Reports the status of DF Checksum, Hibernate, IT, etc.
DEVICE_TYPE	0x0001	Yes	Reports the device type (bq27510)
FW_VERSION	0x0002	Yes	Reports the firmware version on the device type
HW_VERSION	0x0003	Yes	Reports the hardware version of the device type
DF_CHECKSUM	0x0004	No	Enables a data flash checksum to be generated and reports on a read
RESET_DATA	0x0005	No	Returns reset data

Copyright © 2009, Texas Instruments Incorporated

Table 2. *Control( )* Subcommands (continued)

CNTL FUNCTION	CNTL DATA	SEALED ACCESS	DESCRIPTION
Reserved	0x0006	No	Not to be used
PREV_MACWRITE	0x0007	No	Returns previous MAC command code
CHEM_ID	0x0008	Yes	Reports the chemical identifier of the Impedance Track™ configuration
BOARD_OFFSET	0x0009	No	Forces the device to measure and store the board offset
CC_INT_OFFSET	0x000a	No	Forces the device to measure the internal CC offset
WRITE_CC_OFFSET	0x000b	No	Forces the device to store the internal CC offset
SET_HIBERNATE	0x0011	Yes	Forces CONTROL_STATUS [*HIBERNATE*] to 1
CLEAR_HIBERNATE	0x0012	Yes	Forces CONTROL_STATUS [*HIBERNATE*] to 0
SEALED	0x0020	No	Places the bq27510 in SEALED access mode
IT_ENABLE	0x0021	No	Enables the Impedance Track™ algorithm
IF_CHECKSUM	0x0022	No	Reports the instruction flash checksum
CAL_MODE	0x0040	No	Places the bq27510 in calibration mode
RESET	0x0041	No	Forces a full reset of the bq27510

CONTROL_STATUS: 0x0000

Instructs the fuel gauge to return status information to control addresses 0x00/0x01. The status word includes the following information.

Table 3. CONTROL_STATUS Bit Definitions

	bit7	bit6	bit5	bit4	bit3	bit2	bit1	bit0
High Byte	–	FAS	SS	CSV	CCA	BCA	–	–
Low Byte	–	HIBERNATE	–	SLEEP	LDMD	RUP_DIS	VOK	QEN

FAS = Status bit indicating the bq27510 is in FULL ACCESS SEALED state. Active when set.

SS = Status bit indicating the bq27510 is in the SEALED State. Active when set.

CSV = Status bit indicating a valid data flash checksum has been generated. Active when set.

CCA = Status bit indicating the bq27510 coulomb counter calibration routine. Active when set.

BCA = Status bit indicating the bq27510 board calibration routine is active. Active when set.

HIBERNATE = Status bit indicating a request for entry into HIBERNATE from SLEEP mode. True when set. Default is 0.

SLEEP = Status bit indicating the bq27510 is in SLEEP mode. True when set.

LDMD = Status bit indicating the bq27510 Impedance Track™ algorithm using *constant-power* mode. True when set. Default is 0 (*constant-current* mode).

RUP_DIS = Status bit indicating the bq27510 Ra table updates disabled. True when set

VOK = Status bit indicating cell voltages are OK for Qmax updates. True when set.

QEN = Status bit indicating the bq27510 Qmax updates enabled. True when set.

DEVICE_TYPE: 0x0001

Instructs the fuel gauge to return the device type to addresses 0x00/0x01.

FW_VERSION: 0x0002

Instructs the fuel gauge to return the firmware version to addresses 0x00/0x01.

HW_VERSION: 0x0003

Instructs the fuel gauge to return the hardware version to addresses 0x00/0x01.

DF_CHECKSUM: 0x0004

Instructs the fuel gauge to compute the checksum of the data flash memory. The checksum value is written and returned to addresses 0x00/0x01 (UNSEALED mode only). The checksum will not be calculated in SEALED mode; however, the checksum value can still be read.

Copyright © 2009, Texas Instruments Incorporated

RESET_DATA: 0x0005

Instructs the fuel gauge to return the reset data to addresses 0x00/0x01, with the low byte (0x00) being the number of full resets and the high byte (0x01) the number of partial resets.

PREV_MACWRITE: 0x0007

Instructs the fuel gauge to return the previous command written to addresses 0x00/0x01.

CHEM_ID: 0x0008

Instructs the fuel gauge to return the chemical identifier for the Impedance Track™ configuration to addresses 0x00/0x01.

BOARD_OFFSET: 0x0009

Instructs the fuel gauge to compute the coulomb counter offset with internal short and then without internal short applied across the SR inputs. The difference between the two measurements is the board offset. After a delay of approximately 32 seconds, this offset value is returned to addresses 0x00/0x01 and written to data flash. The CONROL STATUS [BCA] is also set. The user must prevent any charge or discharge current from flowing during the process. This function is only available when the fuel gauge is UNSEALED. When SEALED, this command only reads back the board-offset value stored in data flash.

CC_INT_OFFSET: 0x000A

Control data of 0x000a instructs the fuel gauge to compute the coulomb counter offset with internal short applied across the SR inputs. The offset value is returned to addresses 0x00/0x01, after a delay of approximately 16 seconds. This function is only available when the fuel gauge is UNSEALED. When SEALED, this command only reads back the CC_INT_OFFSET value stored in data flash.

WRITE_OFFSET: 0x000B

Control data of 0x000b causes the fuel gauge to write the coulomb counter offset to data flash.

SET_HIBERNATE: 0x0011

Instructs the fuel gauge to force the CONTROL_STATUS [HIBERNATE] bit to 1. This allows the gauge to enter the HIBERNATE power mode after the transition to SLEEP power state is detected. The [HIBERNATE] bit is automatically cleared upon exiting from HIBERNATE mode.

CLEAR_HIBERNATE: 0x0012

Instructs the fuel gauge to force the CONTROL_STATUS [HIBERNATE] bit to 0. This prevents the gauge from entering the HIBERNATE power mode after the transition to SLEEP power state is detected. It can also be used to force the gauge out of HIBERNATE mode.

SEALED: 0x0020

Instructs the fuel gauge to transition from UNSEALED state to SEALED state. The fuel gauge should always be set to SEALED state for use in end equipment.

IT_ENABLE: 0x0021

This command forces the fuel gauge to begin the Impedance Track™ algorithm, sets the active UpdateStatus n location to 0x01 and causes the [VOK] and [QEN] flags to be set in the CONTROL_STATUS register. [VOK] is cleared if the voltages are not suitable for a Qmax update. Once set, [QEN] cannot be cleared. This command is only available when the fuel gauge is UNSEALED.

IF_CHECKSUM: 0x0022

This command instructs the fuel gauge to compute the instruction flash checksum. When the checksum has been calculated and stored, then CONTROL_STATUS [CVS] is set. In UNSEALED mode, the checksum value is returned to addresses 0x00/0x01. The checksum will not be calculated in SEALED mode; however, the checksum value can still be read.

 Copyright © 2009, Texas Instruments Incorporated

CAL_MODE: 0x0040

This command instructs the fuel gauge to enter calibration mode. This command is only available when the fuel gauge is UNSEALED.

RESET : 0x0041

This command instructs the fuel gauge to perform a full reset. This command is only available when the fuel gauge is UNSEALED.

AtRate( ): 0x02/0x03

The AtRate( ) read-/write-word function is the first half of a two-function command set used to set the AtRate value used in calculations made by the AtRateTimeToEmpty( ) function. The AtRate( ) units are in mA.

The *AtRate( )* value is a signed integer, with negative values interpreted as a discharge current value. The *AtRateTimeToEmpty( )* function returns the predicted operating time at the AtRate value of discharge. The default value for *AtRate( )* is zero and will force *AtRate( )* to return 65,535. Both the *AtRate( )* and *AtRateTimeToEmpty( )* commands should only be used in NORMAL mode.

AtRateTimeToEmpty( ): 0x04/0x05

This read-word function returns an unsigned integer value of the predicted remaining operating time if the battery is discharged at the *AtRate( )* value in minutes with a range of 0 to 65,534. A value of 65,535 indicates *AtRate( )* = 0. The fuel gauge updates *AtRateTimeToEmpty( )* within 1 s after the system sets the *AtRate( )* value. The fuel gauge automatically updates *AtRateTimeToEmpty( )* based on the *AtRate( )* value every 1s. Both the *AtRate( )* and *AtRateTimeToEmpty( )* commands should only be used in NORMAL mode.

Temperature( ): 0x06/0x07

This read-word function returns an unsigned integer value of the battery temperature in units of 0.1K measured by the fuel gauge.

Voltage( ): 0x08/0x09

This read-word function returns an unsigned integer value of the measured cell-pack voltage in mV with a range of 0 to 6000 mV.

Flags( ): 0x0a/0x0b

This read-word function returns the contents of the gas-gauge status register, depicting the current operating status.

Table 4. Flags Bit Definitions

	bit7	bit6	bit5	bit4	bit3	bit2	bit1	bit0
High Byte	OTC	OTD	–	–	CHG_INH	XCHG	FC	CHG
Low Byte	–	–	OCV_GD	WAIT_ID	BAT_DET	SOC1	SOCF	DSG

OTC = Over-Temperature in charge condition is detected. True when set.

OTD = Over-Temperature in discharge condition is detected. True when set.

CHG_INH = Charge Inhibit: unable to begin charging (temp outside the range ***[Charge Inhibit Temp Low, Charge Inhibit Temp High]***). True when set.

XCHG = Charge Suspend Alert (temp outside the range ***[Suspend Temperature Low, Suspend Temperature High]***). True when set.

FC = Full-charged condition reached. True when set.

CHG = (Fast) charging allowed. True when set.

OCV_GD = Good OCV measurement taken. True when set.

WAIT_ID = Waiting to identify inserted battery. True when set.

BAT_DET = Battery detected. True when set.

SOC1 = State-of-Charge-Threshold 1 ***(SOC1 Set)*** reached. True when set.

SOCF = State-of-Charge-Threshold Final ***(SOCF Set %)*** reached. True when set.

Copyright © 2009, Texas Instruments Incorporated

DSG = Discharging detected. True when set.

NominalAvailableCapacity( ): 0x0c/0x0d

This read-only command pair returns the uncompensated (less than C/20 load) battery capacity remaining. Units are mAh.

FullAvailableCapacity( ): 0x0e/0x0f

This read-only command pair returns the uncompensated (less than C/20 load) capacity of the battery when fully charged. Units are mAh. *FullAvailableCapacity( )* is updated at regular intervals, as specified by the IT algorithm.

RemainingCapacity( ): 0x10/0x11

This read-only command pair returns the compensated battery capacity remaining. Units are mAh.

FullChargeCapacity( ): 0x12/13

This read-only command pair returns the compensated capacity of the battery when fully charged. Units are mAh. *FullChargeCapacity( )* is updated at regular intervals, as specified by the IT algorithm.

AverageCurrent( ): 0x14/0x15

This read-only command pair returns a signed integer value that is the average current flow through the sense resistor. It is updated every 1 second. Units are mA .

TimeToEmpty( ): 0x16/0x17

This read-only function returns an unsigned integer value of the predicted remaining battery life at the present rate of discharge, in minutes. A value of 65,535 indicates battery is not being discharged.

TimeToFull( ): 0x18/0x19

This read-only function returns an unsigned integer value of predicted remaining time until the battery reaches full charge, in minutes, based upon *AverageCurrent( )*. The computation accounts for the taper current time extension from the linear TTF computation based on a fixed *AverageCurrent( )* rate of charge accumulation. A value of 65,535 indicates the battery is not being charged.

StandbyCurrent( ): 0x1a/0x1b

This read-only function returns a signed integer value of the measured standby current through the sense resistor. The *StandbyCurrent( )* is an adaptive measurement. Initially it reports the standby current programmed in ***Initial Standby***, and after spending some time in standby, reports the measured standby current.

The register value is updated every 1 second when the measured current is above the ***Deadband*** current and is less than or equal to 2 x ***Initial Standby***. The first and last values that meet this criteria are not averaged in, since they may not be stable values. To approximate a 1-minute time constant, each new *StandbyCurrent( )* value is computed by taking approximate 93% weight of the last standby current and approximate 7% of the current measured average current.

StandbyTimeToEmpty( ): 0x1c/0x1d

This read-only function returns an unsigned integer value of the predicted remaining battery life at the standby rate of discharge, in minutes. The computation uses *Nominal Available Capacity* (NAC), the uncompensated remaining capacity, for this computation. A value of 65,535 indicates battery is not being discharged.

MaxLoadCurrent( ): 0x1e/0x1f

This read-only function returns a signed integer value, in units of mA, of the maximum load conditions. The *MaxLoadCurrent( )* is an adaptive measurement which is initially reported as the maximum load current programmed in ***Initial Max Load Current***. If the measured current is ever greater than *Initial Max Load Current*, then *MaxLoadCurrent( )* updates to the new current. *MaxLoadCurrent( )* is reduced to the average of the previous value and ***Initial Max Load Current*** whenever the battery is charged to full after a previous discharge to an SOC less than 50%. This prevents the reported value from maintaining an unusually high value.

 Copyright © 2009, Texas Instruments Incorporated

MaxLoadTimeToEmpty( ): 0x20/0x21

This read-only function returns an unsigned integer value of the predicted remaining battery life at the maximum load current discharge rate, in minutes. A value of 65,535 indicates that the battery is not being discharged.

AvailableEnergy( ): 0x22/0x23

This read-only function returns an unsigned integer value of the predicted charge or energy remaining in the battery. The value is reported in units of mWh.

AveragePower( ): 0x24/0x25

This read-only function returns an signed integer value of the average power during battery charging and discharging. It is negative during discharge and positive during charge. A value of 0 indicates that the battery is not being discharged or charged. The value is reported in units of mW.

TimeToEmptyAtConstantPower( ): 0x26/0x27

This read-only function returns an unsigned integer value of the predicted remaining operating time if the battery is discharged at the *AveragePower( )* value in minutes. A value of 65,535 indicates *AveragePower( )* = 0. The fuel gauge automatically updates *TimeToEmptyatContantPower( )* based on the *AveragePower( )* value every 1 s.

CycleCount( ): 0x2a/0x2b

This read-only function returns an unsigned integer value of the number of cycles the battery has experienced with a range of 0 to 65,535. One cycle occurs when accumulated discharge ≥ ***CC Threshold***.

StateOfCharge( ): 0x2c/0x2d

This read-only function returns an unsigned integer value of the predicted remaining battery capacity expressed as a percentage of *FullChargeCapacity( )*, with a range of 0 to 100%.

Copyright © 2009, Texas Instruments Incorporated

Extended Data Commands

Extended commands offer additional functionality beyond the standard set of commands. They are used in the same manner; however unlike standard commands, extended commands are not limited to 2-byte words. The number of commands bytes for a given extended command ranges in size from single to multiple bytes, as specified in Table 5. For details on the SEALED and UNSEALED states, see Section *Access Modes*.

Table 5. Extended Commands

NAME		COMMAND CODE	UNITS	SEALED ACCESS (1) (2)	UNSEALED ACCESS (1) (2)
Reserved	RSVD	0x34…0x3b	N/A	R	R
DesignCapacity( )	DCAP	0x3c / 0x3d	mAh	R	R
DataFlashClass( ) (2)	DFCLS	0x3e	N/A	N/A	R/W
DataFlashBlock( ) (2)	DFBLK	0x3f	N/A	R/W	R/W
Authenticate( )/BlockData( )	A/DF	0x40…0x53	N/A	R/W	R/W
AuthenticateCheckSum( )/BlockData( )	ACKS/DFD	0x54	N/A	R/W	R/W
BlockData( )	DFD	0x55…0x5f	N/A	R	R/W
BlockDataCheckSum( )	DFDCKS	0x60	N/A	R/W	R/W
BlockDataControl( )	DFDCNTL	0x61	N/A	N/A	R/W
DeviceNameLength( )	DNAMELEN	0x62	N/A	R	R
DeviceName( )	DNAME	0x63...0x69	N/A	R	R
ApplicationStatus( )	APPSTAT	0x6a	N/A	R	R
Reserved	RSVD	0x6b...0x7f	N/A	R	R

(1) SEALED and UNSEALED states are entered via commands to ***Control( )*** 0x00/0x01
(2) In sealed mode, data flash CANNOT be accessed through commands 0x3e and 0x3f.

DesignCapacity( ): 0x3c/0x3d

SEALED and UNSEALED Access: This command returns the value is stored in ***Design Capacity*** and is expressed in mAh. This is intended to be the theoretical or nominal capacity of a new pack, but has no bearing on the operation of the fuel gauge functionality

DataFlashClass( ): 0x3e

UNSEALED Access: This command sets the data flash class to be accessed. The class to be accessed should be entered in hexadecimal.

SEALED Access: This command is not available in SEALED mode.

DataFlashBlock( ): 0x3f

UNSEALED Access: This command sets the data flash block to be accessed. When 0x00 is written to *BlockDataControl( )*, *DataFlashBlock( )* holds the block number of the data flash to be read or written. Example: writing a 0x00 to *DataFlashBlock( )* specifies access to the first 32 byte block and a 0x01 specifies access to the second 32 byte block, and so on.

SEALED Access: This command directs which data flash block will be accessed by the *BlockData( )* command. Writing a 0x00 to *DataFlashBlock( )* specifies the *BlockData( )* command will transfer authentication data. Issuing a 0x01, 0x02 or 0x03 instructs the *BlockData( )* command to transfer ***Manufacturer Info Block A, B,*** or ***C***, respectively.

BlockData( ): 0x40…0x5f

UNSEALED Access: This data block is the remainder of the 32 byte data block when accessing data flash.

SEALED Access: This data block is the remainder of the 32 byte data block when accessing ***Manufacturer Block Info A, B,*** or ***C***.

 Copyright © 2009, Texas Instruments Incorporated

BlockDataChecksum( ): 0x60

UNSEALED Access: This byte contains the checksum on the 32 bytes of block data read or written to data flash. The least-significant byte of the sum of the data bytes written must be complemented ([255 – *x*] , for *x* the least-significant byte) before being written to 0x60.

SEALED Access: This byte contains the checksum for the 32 bytes of block data written to ***Manufacturer Info Block A, B,*** or ***C***. The least-significant byte of the sum of the data bytes written must be complemented ([255 – *x*] , for *x* the least-significant byte) before being written to 0x60.

BlockDataControl( ): 0x61

UNSEALED Access: This command is used to control data flash access mode. Writing 0x00 to this command enables *BlockData( )* to access general data flash. Writing a 0x01 to this command enables SEALED mode operation of *DataFlashBlock( )*.

SEALED Access: This command is not available in SEALED mode.

DeviceNameLength( ): 0x62

UNSEALED and SEALED Access: This byte contains the length of the ***Device Name***.

DeviceName( ): 0x63…0x69

UNSEALED and SEALED Access: This block contains the device name that is programmed in ***Device Name***

ApplicationStatus( ): 0x6a

This byte function allows the system to read the bq27510 ***Application Status*** data flash location. Refer to Table 6 for specific bit definitions.

Reserved – 0x6b – 0x7f

DATA FLASH INTERFACE

Accessing the Data Flash

The bq27510 data flash is a non-volatile memory that contains bq27510 initialization, default, cell status, calibration, configuration, and user information. The data flash can be accessed in several different ways, depending on what mode the bq27510 is operating in and what data is being accessed.

Commonly accessed data flash memory locations, frequently read by a system, are conveniently accessed through specific instructions, already described in Section *Data Commands*. These commands are available when the bq27510 is either in UNSEALED or SEALED modes.

Most data flash locations, however, are only accessible in UNSEALED mode by use of the bq27510 evaluation software or by data flash block transfers. These locations should be optimized and/or fixed during the development and manufacture processes. They become part of a golden image file and can then be written to multiple battery packs. Once established, the values generally remain unchanged during end-equipment operation.

To access data flash locations individually, the block containing the desired data flash location(s) must be transferred to the command register locations, where they can be read to the system or changed directly. This is accomplished by sending the set-up command *BlockDataControl( )* (0x61) with data 0x00. Up to 32 bytes of data can be read directly from the *BlockData( )* (0x40…0x5f), externally altered, then rewritten to the *BlockData( )* command space. Alternatively, specific locations can be read, altered, and rewritten if their corresponding offsets are used to index into the *BlockData( )* command space. Finally, the data residing in the command space is transferred to data flash, once the correct checksum for the whole block is written to *BlockDataChecksum( )* (0x60).

Copyright © 2009, Texas Instruments Incorporated

Occasionally, a data flash CLASS will be larger than the 32-byte block size. In this case, the *DataFlashBlock( )* command is used to designate which 32-byte block the desired locations reside in. The correct command address is then given by 0x40 + offset *modulo* 32. For example, to access ***Terminate Voltage*** in the *Gas Gauging* class, *DataFlashClass( )* is issued 80 (0x50) to set the class. Because the offset is 48, it must reside in the second 32-byte block. Hence, *DataFlashBlock( )* is issued 0x01 to set the block offset, and the offset used to index into the *BlockData( )* memory area is 0x40 + 48 *modulo* 32 = 0x40 + 16 = 0x40 + 0x10 = 0x50.

Reading and writing subclass data are block operations up to 32 bytes in length. If during a write the data length exceeds the maximum block size, then the data is ignored.

None of the data written to memory are bounded by the bq27510– the values are not rejected by the fuel gauge. Writing an incorrect value may result in hardware failure due to firmware program interpretation of the invalid data. The written data is persistent, so a power-on reset does resolve the fault.

MANUFACTURER INFORMATION BLOCKS

The bq27510 contains 96 bytes of user programmable data flash storage: ***Manufacturer Info Block A***, ***Manufacturer Info Block B***, ***Manufacturer Info Block C***. The method for accessing these memory locations is slightly different, depending on whether the device is in UNSEALED or SEALED modes.

When in UNSEALED mode, and when 0x00 has been written to *BlockDataControl( )*, accessing the Manufacturer Info Blocks is identical to accessing general data flash locations. First, a *DataFlashClass( )* command is used to set the subclass, then a *DataFlashBlock( )* command sets the offset for the first data flash address within the subclass. The *BlockData( )* command codes contain the referenced data flash data. When writing the data flash, a checksum is expected to be received by *BlockDataChecksum( )*. Only when the checksum is received and verified is the data actually written to data flash.

As an example, the data flash location for ***Manufacturer Info Block B*** is defined as having a Subclass = 58 and an Offset = 32 through 63 (32 byte block). The specification of Class = System Data is not needed to address ***Manufacturer Info Block B***, but is used instead for grouping purposes when viewing data flash info in the bq27510 evaluation software.

When in SEALED mode or when 0x01 *BlockDataControl( )* does not contain 0x00, data flash is no longer available in the manner used in UNSEALED mode. Rather than issuing subclass information, a designated Manufacturer Information Block is selected with the *DataFlashBlock( )* command. Issuing a 0x01, 0x02, or 0x03 with this command causes the corresponding information block (A, B, or C, respectively) to be transferred to the command space 0x40…0x5f for editing or reading by the system. Upon successful writing of checksum information to *BlockDataChecksum( )*, the modified block is returned to data flash. ***Note: Manufacturer Info Block A*** is read-only when in SEALED mode.

ACCESS MODES

The bq27510 provides three security modes (FULL ACCESS, UNSEALED, and SEALED) that control data flash access permissions according to Table 6. Data flash locations, specified in Table 7, are accessible to the user. Manufacture information refers to the three reserved 32-byte blocks.

Table 6. Data Flash Access

Security Mode	Data Flash	Manufacturer Information
FULL ACCESS	R/W	R/W
UNSEALED	R/W	R/W
SEALED	None	R (A); R/W (B, C)

Copyright © 2009, Texas Instruments Incorporated

Although FULL ACCESS and UNSEALED modes appear identical, only FULL ACCESS mode allows the bq27510 to write access-mode transition keys.

SEALING/UNSEALING DATA FLASH

The bq27510 implements a key-access scheme to transition between SEALED, UNSEALED, and FULL-ACCESS modes. Each transition requires that a unique set of two keys be sent to the bq27510 via the *Control( )* control command. The keys must be sent consecutively, with no other data being written to the *Control( )* register in between. Note that to avoid conflict, the keys must be different from the codes presented in the *CNTL DATA* column of Table 2 subcommands.

When in SEALED mode the *[SS]* bit of CONTROL_STATUS is set, but when the UNSEAL keys are correctly received by the bq27510, the *[SS]* bit is cleared. When the full-access keys are correctly received then the CONTROL_STATUS *[FAS]* bit is cleared.

Both the sets of keys for each level are 2 bytes each in length and are stored in data flash. The UNSEAL key (stored at ***Unseal Key 0*** and ***Unseal Key 1***) and the FULL-ACCESS key (stored at ***Full Access Key 0*** and ***Full Access Key 1***) can only be updated when in FULL-ACCESS mode. The order of the bytes entered through the *Control( )* command is the reverse of what is read from the part. For example, if the 1st and 2nd word of the ***UnSeal Key 0*** returns 0x1234 and 0x5678, then *Control( )* should supply 0x3412 and 0x7856 to unseal the part.

Copyright © 2009, Texas Instruments Incorporated

DATA FLASH SUMMARY

Table 7 summarizes the data flash locations available to the user, including their default, minimum, and maximum values.

Table 7. Data Flash Summary

Class	Subclass ID	Subclass	Offset	Name	Data Type	Min Value	Max Value	Default Value	Units
Configuration	2	Safety	0	OT Chg	I2	0	1200	550	0.1°C
Configuration	2	Safety	2	OT Chg Time	U1	0	60	2	s
Configuration	2	Safety	3	OT Chg Recovery	I2	0	1200	500	0.1°C
Configuration	2	Safety	5	OT Dsg	I2	0	1200	600	0.1°C
Configuration	2	Safety	7	OT Dsg Time	U1	0	60	2	s
Configuration	2	Safety	8	OT Dsg Recovery	I2	0	1200	550	0.1°C
Configuration	32	Charge Inhibit Config	0	Charge Inhibit Temp Low	I2	–400	1200	0	0.1°C
Configuration	32	Charge Inhibit Config	2	Charge Inhibit Temp High	I2	–400	1200	450	0.1°C
Configuration	32	Charge Inhibit Config	4	Temp Hys	I2	0	100	50	0.1°C
Configuration	34	Charge	2	Charging Voltage	I2	0	20,000	4200	mV
Configuration	34	Charge	4	Delta Temperature	I2	0	500	50	0.1°C
Configuration	34	Charge	6	Suspend Temperature Low	I2	–400	1200	-50	0.1°C
Configuration	34	Charge	8	Suspend Temperature High	I2	–400	1200	550	0.1°C
Configuration	36	Charge Termination	2	Taper Current	I2	0	1000	100	mA
Configuration	36	Charge	4	Minimum Taper Charge	I2	0	1000	25	0.01mAh
Configuration	36	Charge Termination	6	Taper Voltage	I2	0	1000	100	mV
Configuration	36	Charge Termination	8	Current Taper Window	U1	0	60	40	s
Configuration	48	Data	4	Initial Standby Current	I1	–128	0	–10	mA
Configuration	48	Data	5	Initial Max Load Current	I2	–32,767	0	–500	mA
Configuration	48	Data	7	CC Threshold	I2	100	32,767	900	mAh
Configuration	48	Data	10	Design Capacity	I2	0	65,535	1000	mAh
Configuration	**48**	**Data**	**12**	**Device Name**	**S8**	**x**	**x**	**bq27510**	**–**
Configuration	49	Discharge	0	SOC1 Set Threshold	I1	0	255	150	mAh
Configuration	49	Discharge	1	SOC1 Clear Threshold	I1	0	255	175	mAh
Configuration	49	Discharge	2	SOCF Set Threshold	I1	0	255	75	mAh
Configuration	49	Discharge	3	SOCF Clear Threshold	I1	0	255	100	mAh
System Data	58	Manufacturer Info	0–31	Block A [0–31]	H1	0x00	0xff	0x00	–
System Data	58	Manufacturer Info	32–63	Block B [0–31]	H1	0x00	0xff	0x00	–
System Data	58	Manufacturer Info	64–95	Block C [0–31]	H1	0x00	0xff	0x00	–
Configuration	64	Registers	0	Operation Configuration	H2	0x0000	0xffff	0x0979	
Configuration	68	Power	0	Flash Update OK Voltage	I2	0	4200	2800	mV
Configuration	68	Power	7	Sleep Current	I2	0	100	10	mA
Configuration	68	Power	16	Hibernate Current	U2	0	700	8	mA
Configuration	68	Power	18	Hibernate Voltage	U2	2400	3000	2550	mV
Gas Gauging	80	IT Cfg	0	Load Select	U1	0	255	1	–
Gas Gauging	80	IT Cfg	1	Load Mode	U1	0	255	0	–
Gas Gauging	80	IT Cfg	48	Terminate Voltage	I2	–32,768	32,767	3000	mV
Gas Gauging	80	IT Cfg	53	User Rate-mA	I2	0	9000	0	mA
Gas Gauging	80	IT Cfg	55	User Rate-mW	I2	0	14,000	0	mW
Gas Gauging	80	IT Cfg	57	Reserve Cap-mAh	I2	0	9000	0	mAh
Gas Gauging	80	IT Cfg	59	Reserve Cap-mWh	I2	0	14,000	0	mWh
Gas Gauging	81	Current Thresholds	0	Dsg Current Threshold	I2	0	2000	60	mA
Gas Gauging	81	Current Thresholds	2	Chg Current Threshold	I2	0	2000	75	mA
Gas Gauging	81	Current Thresholds	4	Quit Current	I2	0	1000	40	mA
Gas Gauging	81	Current Thresholds	6	Dsg Relax Time	U2	0	8191	1800	s
Gas Gauging	81	Current Thresholds	8	Chg Relax Time	U1	0	255	60	s
Gas Gauging	81	Current Thresholds	9	Quit Relax Time	U1	0	63	1	s

Copyright © 2009, Texas Instruments Incorporated

Table 7. Data Flash Summary (continued)

Class	Subclass ID	Subclass	Offset	Name	Data Type	Min Value	Max Value	Default Value	Units
Gas Gauging	82	State	0	IT Enable	H1	0x00	0xff	0x00	
Gas Gauging	82	State	1	Application Status	H1	0x00	0xff	0x00	
Gas Gauging	82	State	2	Qmax	I2	0	32,767	1000	mAh
Gas Gauging	82	State	4	Cycle Count 0	U2	0	65,535	0	–
Gas Gauging	82	State	6	Update Status 0	H1	0x00	0x03	0x00	–
Gas Gauging	82	State	2	Qmax 1	I2	0	32,767	1000	mAh
Gas Gauging	82	State	4	Cycle Count 1	U2	0	65,535	0	–
Gas Gauging	82	State	6	Update Status 1	H1	0x00	0x03	0x00	–
Gas Gauging	82	State	16	Avg I Last Run	I2	–32,768	32,767	-299	mA
Gas Gauging	82	State	18	Avg P Last Run	I2	–32,768	32,767	-1131	mAh
Default Ra Tables	87	Def Ra	0–18	See (1)					
Default Ra Tables	88	Def Ra	0–18						
Ra Tables	91	Pack0 Ra	0–18	See (1)					
Ra Tables	92	Pack1 Ra	0–18						
Ra Tables	93	Pack0 Rax	0–18						
Ra Tables	94	Pack1 Rax	0–18						
Calibration	104	Data	0	CC Gain	F4	0.1	4	0.47095	–
Calibration	104	Data	4	CC Delta	F4	2,9826	1,193,046	559,538.8	–
Calibration	104	Data	8	CC Offset	I2	–32768	32767	–1667	mV
Calibration	104	Data	10	Board Offset	I1	–128	127	0	mV
Calibration	104	Data	11	Int Temp Offset	I1	–128	127	78	0.1°C
Calibration	104	Data	12	Ext Temp Offset	I1	–128	127	0	0.1°C
Calibration	104	Data	13	Pack V Offset	I1	–128	127	0	mV
Calibration	107	Current	1	Deadband	U1	0	255	5	mA
Security	112	Codes	0	Unseal Key 0	H2	0x0000	0xffff	0x3672	–
Security	112	Codes	2	Unseal Key 1	H2	0x0000	0xffff	0x0414	–
Security	112	Codes	4	Full-Access Key 0	H2	0x0000	0xffff	0xffff	–
Security	112	Codes	6	Full-Access Key 1	H2	0x0000	0xffff	0xffff	–

(1) Encoded battery profile information created by bqEasy software.

Copyright © 2009, Texas Instruments Incorporated

FUNCTIONAL DESCRIPTION

FUEL GAUGING

The bq27510 measures the cell voltage, temperature, and current to determine battery SOC. The bq27510 monitors charge and discharge activity by sensing the voltage across a small-value resistor (5 mΩ to 20 mΩ typ.) between the SRP and SRN pins and in series with the cell. By integrating charge passing through the battery, the battery's SOC is adjusted during battery charge or discharge.

The total battery capacity is found by comparing states of charge before and after applying the load with the amount of charge passed. When an application load is applied, the impedance of the cell is measured by comparing the OCV obtained from a predefined function for present SOC with the measured voltage under load. Measurements of OCV and charge integration determine chemical state of charge and chemical capacity (Qmax). The initial Qmax values are taken from a cell manufacturers' data sheet multiplied by the number of parallel cells. It is also used for the value in ***Design Capacity***. The bq27510 acquires and updates the battery-impedance profile during normal battery usage. It uses this profile, along with SOC and the Qmax value, to determine *FullChargeCapacity( )* and *StateOfCharge( )*, specifically for the present load and temperature. *FullChargeCapacity( )* is reported as capacity available from a fully charged battery under the present load and temperature until *Voltage( )* reaches the ***Term Voltage***. *NominalAvailableCapacity( )* and *FullAvailableCapacity( )* are the uncompensated (no or light load) versions of *RemainingCapacity( )* and *FullChargeCapacity( )* respectively.

The bq27510 has two flags accessed by the *Flags( )* function that warns when the battery's SOC has fallen to critical levels. When *RemainingCapacity( )* falls below the first capacity threshold, specified in ***SOC1 Set Threshold***, the *[SOC1]* (*State of Charge Initial*) flag is set. The flag is cleared once *RemainingCapacity( )* rises above ***SOC1 Set Threshold***. The bq27510's BAT_LOW pin automatically reflects the status of the *[SOC1]* flag. All units are in mAh.

When *RemainingCapacity( )* falls below the second capacity threshold, ***SOCF Set Threshold***, the *[SOCF]* (*State of Charge Final*) flag is set, serving as a final discharge warning. If *SOCF Set Threshold* = –1, the flag is inoperative during discharge. Similarly, when *RemainingCapacity( )* rises above ***SOCF Clear Threshold*** and the *[SOCF]* flag has already been set, the *[SOCF]* flag is cleared. All units are in mAh.

IMPEDANCE TRACK™ VARIABLES

The bq27510 has several data flash variables that permit the user to customize the Impedance Track™ algorithm for optimized performance. These variables are dependent upon the power characteristics of the application as well as the cell itself.

Load Mode

Load Mode is used to select either the constant-current or constant-power model for the Impedance Track™ algorithm as used in ***Load Select*** (see ***Load Select***). When ***Load Mode*** is 0, the *Constant Current Model* is used (default). When 1, the *Constant Power Model* is used. The *[LDMD]* bit of CONTROL_STATUS reflects the status of ***Load Mode***.

Load Select

Load Select defines the type of power or current model to be used to compute load-compensated capacity in the Impedance Track™ algorithm. If ***Load Mode*** = 0 (*Constant Current*), then the options presented in Table 8 are available.

Table 8. Constant-Current Model Used When *Load Mode = 0*

***LoadSelect* Value**	**Current Model Used**
0	Average discharge current from previous cycle: There is an internal register that records the average discharge current through each entire discharge cycle. The previous average is stored in this register.
1(default)	Present average discharge current: This is the average discharge current from the beginning of this discharge cycle until present time.
2	Average current: based off the ***AverageCurrent( )***
3	Current: based off of a low-pass-filtered version of ***AverageCurrent( )*** *(τ=14s)*

 Copyright © 2009, Texas Instruments Incorporated

Table 8. Constant-Current Model Used When *Load Mode = 0* (continued)

***LoadSelect* Value**	**Current Model Used**
4	Design capacity / 5: C Rate based off of Design Capacity /5 or a C / 5 rate in mA.
5	AtRate (mA): Use whatever current is in ***AtRate( )***
6	User_Rate-mA: Use the value in ***User_Rate( )***. This gives a completely user-configurable method.

If ***Load Mode*** = 1 (*Constant Power*) then the following options are available:

Table 9. Constant-Current Model Used When *Load Mode = 1*

***LoadSelect* Value**	**Current Model Used**
0(default)	Average discharge current from previous cycle: There is an internal register that records the average discharge current through each entire discharge cycle. The previous average is stored in this register.
1	Present average discharge current: This is the average discharge current from the beginning of this discharge cycle until present time.
2	Average current × voltage: based off the ***AverageCurrent( )*** and ***Voltage( )***.
3	Current × voltage: based off of a low-pass-filtered version of ***AverageCurrent( )*** *(τ=14s)* and ***Voltage( )***.
4	Design energy / 5: C Rate based off of Design Energy /5 or a C / 5 rate in mA.
5	AtRate (10 mW): Use whatever current is in ***AtRate( )***
6	User_Rate-10 mW: Use the value in ***User_Rate( )*** mW. This gives a completely user-configurable method.

Reserve Cap-mAh

Reserve Cap-mAh determines how much actual remaining capacity exists after reaching 0 ***RemainingCapacity( )***, before ***Terminate Voltage*** is reached. A no-load rate of compensation is applied to this reserve.

Reserve Cap-mWh

Reserve Cap-mWh determines how much actual remaining capacity exists after reaching 0 *AvailableEnergy( )*, before ***Terminate Voltage*** is reached. A no-load rate of compensation is applied to this reserve capacity.

Dsg Current Threshold

This register is used as a threshold by many functions in the bq27510 to determine if actual discharge current is flowing into or out of the cell. The threshold should be set low enough to be below any normal application load current but high enough to prevent noise or drift from affecting the measurement.

Chg Current Threshold

This register is used as a threshold by many functions in the bq27510 to determine if actual charge current is flowing into or out of the cell. The threshold should be set low enough to be below any normal charge current but high enough to prevent noise or drift from affecting the measurement.

Quit Current, Dsg Relax Time, Chg Relax Time, and Quit Relax Time

The ***Quit Current*** is used as part of the Impedance Track™ algorithm to determine when the bq27510 enters relaxation mode from a current flowing mode in either the charge direction or the discharge direction. The value of Quit Current should be above the standby current of the system.

The following criteria must be met to enter relaxation mode

| *AverageCurrent( )* | < | ***Quit Current*** | for ***Dsg Relax Time*** (if in CHG mode) or Chg Relax Time (if in DSG mode).

After about 30 minutes in relaxation mode, the bq27510 attempts to take accurate OCV readings. An additional requirement of dV/dt 4 μV/sec is required for the bq27510 to perform Qmax updates. These updates are used in the Impedance Track™ algorithms. It is critical that the battery voltage be relaxed during OCV readings to and that the current is not be higher than C/20 when attempting to go into relaxation mode.

Copyright © 2009, Texas Instruments Incorporated

Quit Relax Time specifies the minimum time required for *AverageCurrent( )* to remain above the ***QuitCurrent*** threshold before exiting relaxation mode.

Qmax 0 and Qmax 1

Generically called *Qmax*, these dynamic variables contain the respective maximum chemical capacity of the active cell profiles, and are determined by comparing states of charge before and after applying the load with the amount of charge passed. They also correspond to capacity at very low rate of discharge, such as C/20 rate. For high accuracy, this value is periodically updated by the bq27510 during operation. Based on the battery cell capacity information, the initial value of chemical capacity should be entered in the ***Qmax n*** field for each default cell profile. The Impedance Track™ algorithm updates these values and maintains them in the associated actual cell profiles.

Update Status 0, Update Status 1

Bit 0 (0x01) of the ***Update Status n*** registers indicates that the bq27510 has learned new Qmax parameters and is accurate. The remaining bits are reserved. Bits 0 is a status flag that can be set by the bq27510 although a user can modify it. Bit 0 should never be modified except when creating a golden image file as explained in the application note Preparing Optimized Default Flash Constants for specific Battery Types (SLUA334.pdf). Bit 0 is updated as needed by the bq27510.

Avg I Last Run

The bq27510 logs the current averaged from the beginning to the end of each discharge cycle. It stores this average current from the previous discharge cycle in this register. This register should never need to be modified. It is only updated by the bq27510 when required.

Avg P Last Run

The bq27510 logs the power averaged from the beginning to the end of each discharge cycle. It stores this average power from the previous discharge cycle in this register. To get a correct average power reading the bq27510 continuously multiplies instantaneous current times ***Voltage( )*** to get power. It then logs this data to derive the average power. This register should never need to be modified. It is only updated by the bq27510 when required.

Delta Voltage

The bq27510 stores the maximum difference of *Voltage( )* during short load spikes and normal load, so the Impedance Track™ algorithm can calculate remaining capacity for pulsed loads. It is not recommended to change this value.

Default Ra and Ra Tables

These tables contain encoded data and, with the exception of the ***Default Ra Tables***, are automatically updated during device operation. No user changes should be made except for reading/writing the values from a pre-learned pack (part of the process for creating golden image files).

DETAILED PIN DESCRIPTIONS

The Operation Configuration Register

Some bq27510 pins are configured via the ***Operation Configuration*** data flash register, as indicated in Table 5 3. This register is programmed/read via the methods described in Section *Accessing the Data Flash*. The register is located at subclass =64, offset = 0.

Table 10. Operation Configuration Bit Definition

	bit7	bit6	bit5	bit4	bit3	bit2	bit1	bit0
High Byte	RESCAP	BATG_OVR	–	PFC_CFG1	PFC_CFG0	IWAKE	RSNS1	RSNS0
Low Byte	–	IDSELEN	SLEEP	RMFCC	BATL_POL	BATG_POL	BAT_FN	TEMPS

 Copyright © 2009, Texas Instruments Incorporated

RESCAP =	No-load rate of compensation is applied to the reserve capacity calculation. True when set. Default is 0.
BATG_OVR =	BAT_GD override bit. If the gauge enters HIBERNATE only due to the cell voltage, the BAT_GD will not negate. True when set. Default is 0. If both current and voltage are below the HIBERNATE thresholds, the voltage condition check above is precedent over the current condition check
PFC_CFG1/PFC_CFG0 =	Pin function code (PFC) mode selection: PFC 0, 1, or 2 selected by 0/0, 0/1, or 1/0, respectively. Default is PFC 1 (0/1).
IWAKE/RSNS1/RSNS0 =	These bits configure the current wake function (see Table 11). Default is 0/0/1.
IDSELEN =	Enables cell profile selection feature. True when set. Default is 1.
SLEEP =	The fuel gauge can enter sleep, if operating conditions allow. True when set. Default is 1.
RMFCC =	RM is updated with the value from FCC, on valid charge termination. True when set. Default is 1
BATL_POL =	BAT_LOW pin is active-high. True when set. Default is 1.
BATG_POL =	BAT_LOW/BAT_GD pin is active-low. True when cleared. Default is 0.
BAT_FN =	Selects BAT_LOW (bit clear) or /BAT_GD (bit set) function on pin 12. Default is 0.
TEMPS =	Selects external thermistor for Temperature( ) measurements. True when set. Default is 1.

Pin Function Code Descriptions

The bq27510 has three possible pin-function variations that can be selected in accordance with the circuit architecture of the end application. Each variation has been assigned a pin function code, or PFC.

When the PFC is set to 0, only the bq27510 measures battery temperature under discharge and relaxation conditions. The charger does not receive any information from the bq27510 about the temperature readings, and therefore operates open-loop with respect to battery temperature.

A PFC of 1 is like a PFC of 0, except temperature is also monitored during battery charging. If charging temperature falls outside of the preset range defined in data flash, a charger can be disabled via the BAT_LOW/BAT_GD pin, until cell temperature recovers. See Section *Charge Inhibit* for additional details.

Finally when the PFC is set to 2, the battery thermistor can be shared between the fuel gauge and the charger. The charger has full usage of the thermistor during battery charging, while the fuel gauge uses the thermistor exclusively during discharge and battery relaxation.

The PFC is specified in ***Operation Configuration [PFC_CFG1, PFC_CFG0]***. The default is PFC = 1.

BAT_LOW/BAT_GD Pin

The BAT_LOW/BAT_GD is a multiplex pin. The function is defined by ***[BAT_FN]*** as a system processor with an electrical indicator of battery status. It the BAT_LOW function is activated, the signaling on the multiplexed pin follows the status of the *[SOC1]* bit in the *Flags( )* register. Note that the polarity of the pin output can be inverted via the *[BATL_POL]* bit of the ***Operation Configuration***.

The bq27510 must operate in conjunction with other electronics in a system appliance, such as chargers or other ICs and application circuits that draw appreciable power. After a battery is inserted into the system, there should be no charging or discharging current higher than C/20, so that an accurate OCV can be read. The OCV is used for helping determine which battery profile to use, as it constitutes part of the battery impedance measurement.

When a battery is inserted into a system, the Impedance Track™ algorithm requires that no charging of the battery takes place and that any discharge is limited to less than C/20–these conditions are sufficient for the fuel gauge to take an accurate OCV reading. To disable these functions, the BAT_LOW/BAT_GD pin is merely negated from the default setting. Once an OCV reading has be made, the BAT_LOW/BAT_GD pin is asserted, thereby enabling battery charging and regular discharge of the battery. The ***Operation Configuration [BATG_POL]*** bit can be used to set the polarity of the battery good signal, should the default configuration need to be changed.

In PFC 1, the BAT_LOW/BAT_GD pin is also used to disable battery charging when the bq27510 reads battery temperatures outside the range defined by ***[Charge Inhibit Temp Low, Charge Inhibit Temp High]***. The BAT_LOW/BAT_GD line is returned to deserted state once temperature falls within the range ***[Charge Inhibit Temp Low + Temp Hys, Charge Inhibit Temp High – Temp Hys]***.

Copyright © 2009, Texas Instruments Incorporated

Battery Detection using the BI/TOUT Pin

During power-up or hibernate activities, or any other activity where the bq27510 needs to determine whether a battery is connected or not, the fuel gauge applies a test for battery presence. First, the BI/TOUT pin is put into high-Z status. The weak 1.8MΩ pull-up resistor will keep the pin high while no battery is present. When a battery is inserted (or is already inserted) into the system device, the BI/TOUT pin will be pulled low. This state is detected by the fuel gauge, which polls this pin every second when the gauge has power. A *battery-disconnected* status is assumed when the bq27510 reads a thermistor voltage that is near 2.5V.

TEMPERATURE MEASUREMENT

The bq27510 measures battery temperature via its TS input, in order to supply battery temperature status information to the fuel gauging algorithm and charger-control sections of the gauge. Alternatively, it can also measure internal temperature via its on-chip temperature sensor, but only if the ***[TEMPS]*** bit of ***Operation Configuration*** register is cleared.

Regardless of which sensor is used for measurement, a system processor can request the current battery temperature by calling the *Temperature( )* function (see Section *Standard Data Commands*, for specific information).

The external temperature measurement circuit must use a 103AT-type thermistor. Additional circuit information for connecting this thermistor to the bq27510 is shown in Section *Reference Schematic*.

OVER-TEMPERATURE INDICATION

Over-Temperature: Charge

If during charging, *Temperature( )* reaches the threshold of ***OT Chg*** for a period of ***OT Chg Time*** and *AverageCurrent( )* **> *Chg Current Threshold***, then the *[OTC]* bit of *Flags( )* is set. When *Temperature( )* falls to ***OT Chg Recovery***, the *[OTC]* of *Flags( )* is reset.

If ***OT Chg Time*** = 0 then feature is completely disabled.

Over-Temperature: Discharge

If during discharging, *Temperature( )* reaches the threshold of ***OT Dsg*** for a period of ***OT Dsg Time*** and *AverageCurrent( )* **≤ *-Dsg Current Threshold***, then the *[OTD]* bit of *Flags( )* is set. When *Temperature( )* falls to ***OT Dsg Recovery***, the *[OTD]* of *Flags( )* is reset.

If ***OT Dsg Time*** = 0 then feature is completely disabled.

CHARGING AND CHARGE-TERMINATION INDICATORS

Detecting Charge Termination

For proper bq27510 operation, the cell charging voltage must be specified by the user. The default value for this variable is ***Charging Voltage*** = 4200mV.

The bq27510 detects charge termination when (1) during 2 consecutive periods of ***Current Taper Window***, the *AverageCurrent( )* is < ***Taper Current***, (2) during the same periods, the accumulated change in capacity > Min Taper Charge / ***Current Taper Window***, and (3) *Voltage( )* > ***Charging Voltage – Taper Voltage***. When this occurs, the *[CHG]* bit of *Flags( )* is cleared. Also, if the ***[RMFCC]*** bit of ***Operation Configuration*** is set, and *RemainingCapacity( )* is set equal to *FullChargeCapacity( )*.

Charge Inhibit and Suspend

The bq27510 can indicate when battery temperature has fallen below or risen above predefined thresholds ***Charge Inhibit Temp Low*** or ***Charge Inhibit Temp High***, respectively. In this mode, the [CHG_INT] bit is set and the BAT_GD pin is deserted to indicate this condition. The [CHG_INT] bit is cleared and the BAT_GD pin is asserted once the battery temperature returns to the range ***[Charge Inhibit Temp Low + Temp Hys, Charge Inhibit Temp High – Temp Hys]***.

 Copyright © 2009, Texas Instruments Incorporated

When PFC = 1, the bq27505 can indicate when battery temperature has fallen below or risen above predefined thresholds ***Suspend Low Temp*** or ***Suspend High Temp***, respectively. In this mode, the [XCHG] bit is set to indicate this condition. The [XCHG] bit is cleared once the battery temperature returns to the range ***[Charge Inhibit Temp Low + Temp Hys, Charge Inhibit Temp High – Temp Hys]***.

The charging should not start when the temperature is below the Charge Inhibit Temp Low or above the Charge Inhibit Temp High. The charging can continue if the charging starts inside the window [Charge Inhibit Temp Low, Charge Inhibit Temp High] until the temperature is either below Suspend Low Temp or above the Suspend Low Temp. Therefore, the window [Charge Inhibit Temp Low, Charge Inhibit Temp High] must be inside the window of [Suspend Low Temp, Suspend High Temp].

POWER MODES

The bq27510 has four power modes: NORMAL, SLEEP, HIBERNATE and BAT INSERT CHECK. In NORMAL mode, the bq27510 is fully powered and can execute any allowable task. In SLEEP mode the fuel gauge exists in a reduced-power state, periodically taking measurements and performing calculations. In HIBERNATE mode, the fuel gauge is in a very low power state, but can be woken up by communication. Finally, the BAT INSERT CHECK mode is a powered-up, but low-power halted, state, where the bq27510 resides when no battery is inserted into the system.

The relationship between these modes is shown in Figure 2.

Copyright © 2009, Texas Instruments Incorporated

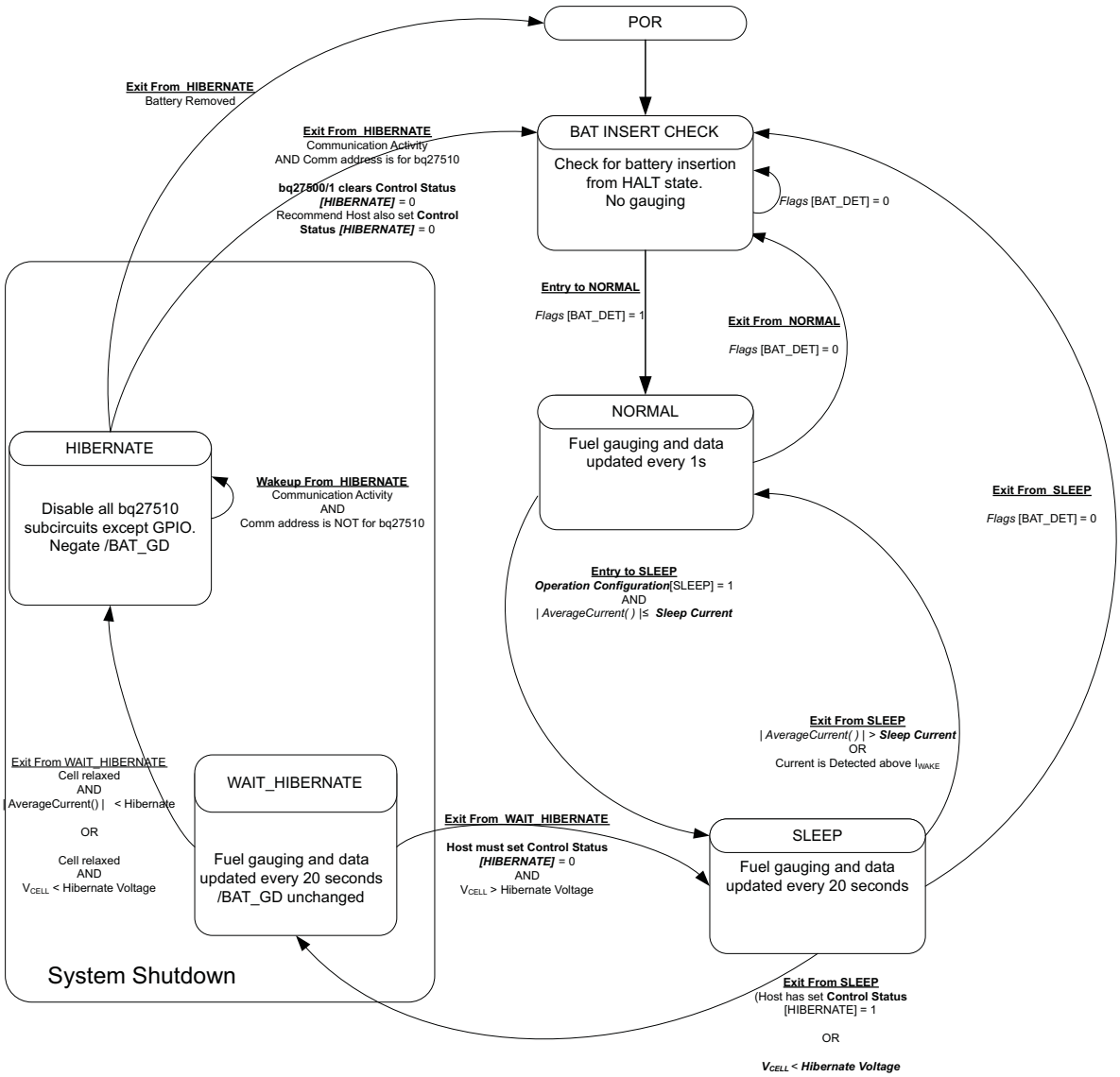

Figure 2. Power Mode Diagram

NORMAL Mode

The fuel gauge is in NORMAL Mode when not in any other power mode. During this mode, *AverageCurrent( )*, *Voltage( )* and *Temperature( )* measurements are taken, and the interface data set is updated. Decisions to change states are also made. This mode is exited by activating a different power mode.

Because the gauge consumes the most power in NORMAL mode, the Impedance Track™ algorithm minimizes the time the fuel gauge remains in this mode.

SLEEP Mode

SLEEP mode is entered automatically if the feature is enabled (***Operation Configuration [SLEEP]***) = 1) and *AverageCurrent( )* is below the programmable level ***Sleep Current.*** Once entry into SLEEP mode has been qualified, but prior to entering it, the bq27510performs an ADC autocalibration to minimize offset.

During SLEEP mode, the bq27510 periodically takes data measurements and updates its data set. However, a majority of its time is spent in an idle condition.

 Copyright © 2009, Texas Instruments Incorporated

The bq27510 exits SLEEP if any entry condition is broken, specifically when (1) *AverageCurrent( )* rises above ***Sleep Current***, or (2) a current in excess of I_{WAKE} through R_{SENSE} is detected.

In the event that a battery is removed from the system while a charger is present (and powering the gauge), Impedance Track™ updates are not necessary. Hence, the fuel gauge enters a state that checks for battery insertion and does not continue executing the Impedance Track™ algorithm.

BAT INSERT CHECK Mode

This mode is a halted-CPU state that occurs when an adapter, or other power source, is present to power the bq27510 (and system), yet no battery has been detected. When battery insertion is detected, a series of initialization activities begin, which include: OCV measurement, setting the BAT_GD pin, and selecting the appropriate battery profiles. The battery insertion detection takes about 3ms.

Some commands, issued by a system processor, can be processed while the bq27510 is halted in this mode. The gauge will wake up to process the command, then return to the halted state awaiting battery insertion.

HIBERNATE Mode

HIBERNATE mode should be used when the system equipment needs to enter a very low-power state, and minimal gauge power consumption is required. This mode is ideal when a system equipment is set to its own HIBERNATE, SHUTDOWN, or OFF modes. The fuel gauge can enter HIBERNATE due to either low cell voltage or low load current.

- HIBERNATE due to the cell voltage. When the cell voltage drops below the Hibernate Voltage and a valid OCV measurement has been taken, the fuel gauge enters HIBERNATE mode The [HIBERNATE] bit of the CONTROL register has no impact for the fuel gauge to enter the HIBERNATE mode.
- HIBERNATE due to the load current. If the fuel gauge enters the HIBERNATE mode due to the load current, the [HIBERNATE] bit of the CONTROL_STATUS register must be set. The gauge waits to enter HIBERNATE mode until it has taken a valid OCV measurement and the magnitude of the average cell current has fallen below Hibernate Current.

The gauge will remain in HIBERNATE mode until the system issues a direct I2C command to the gauge or a POR occurs. I2C Communication that is not directed to the gauge will not wake the gauge (or at least for very long).

During Hibernate mode the /BAT_GD signal is negated (no battery charging/discharging). This prevents a charger application from inadvertently charging the battery before an OCV reading can be taken. It is the system's responsibility to wake the bq27510 after it has gone into HIBERNATE mode. After waking, the gauge can proceed with the initialization of the battery information (OCV, profile selection, etc.)

It is suggested to keep the system in the SLEEP mode instead of HIBERNATE mode when a charger is attached. The reason is that charger removal will not wake up the battery from HIBERNATE mode.

POWER CONTROL

Reset Functions

When the bq27510 detects a software reset (*[RESET]* bit of *Control( )* initiated), it determines the type of reset and increments the corresponding counter. This information is accessible by issuing the command *Control( )* function with the RESET_DATA subcommand.

As shown in Figure 3 if a partial reset was detected, a RAM checksum is generated and compared against the previously stored checksum. If the checksum values do not match, the RAM is reinitialized (a *Full Reset*). The stored checksum is updated every time RAM is altered.

Copyright © 2009, Texas Instruments Incorporated

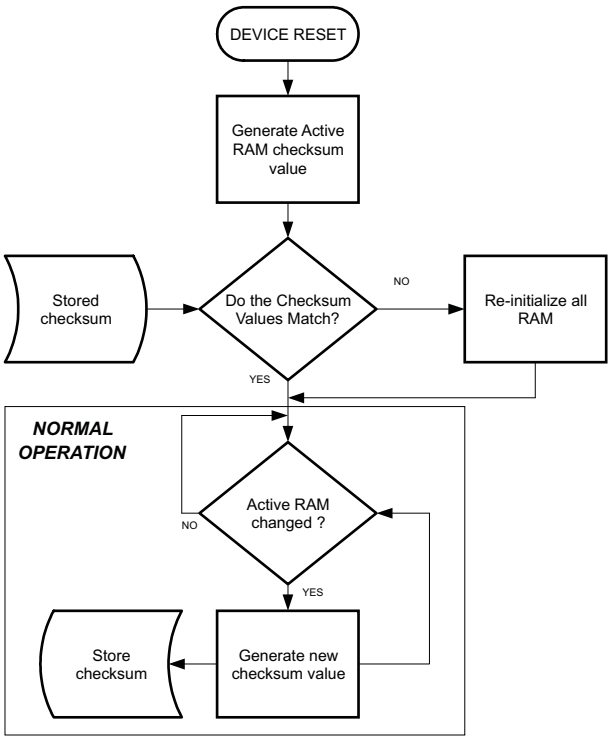

Figure 3. Partial Reset Flow Diagram

Wake-Up Comparator

The wake up comparator is used to indicate a change in cell current while the bq27510 is in SLEEP mode. ***Operation Configuration*** uses bits ***[RSNS1–RSNS0]*** to set the sense resistor selection. ***Operation Configuration*** also uses the ***[IWAKE]*** bit to select one of two possible voltage threshold ranges for the given sense resistor selection. An internal interrupt is generated when the threshold is breached in either charge or discharge directions. Setting both ***[RSNS1]*** and ***[RSNS0]*** to 0 disables this feature.

 Copyright © 2009, Texas Instruments Incorporated

Table 11. I_{WAKE} Threshold Settings(1)

RSNS1	RSNS0	IWAKE	Vth(SRP-SRN)
0	0	0	Disabled
0	0	1	Disabled
0	1	0	+1. 0 mV or –1.0 mV
0	1	1	+2.2 mV or –2.2 mV
1	0	0	+2.2 mV or –2.2 mV
1	0	1	+4.6 mV or–4.6 mV
1	1	0	+4.6 mV or –4.6 mV
1	1	1	+9.8 mV or –9.8 mV

(1) The actual resistance value versus the setting of the sense resistor is not important; just the actual voltage threshold when calculating the configuration. The voltage thresholds are typical values under room temperature.

Flash Updates

Data Flash can only be updated if *Voltage( )* ≥ ***Flash Update OK Voltage***. Flash programming current can cause an increase in LDO dropout. The value of ***Flash Update OK Voltage*** should be selected such that the bq27510 Vcc voltage does not fall below its minimum of 2.4V during Flash write operations.

AUTOCALIBRATION

The bq27510 provides an autocalibration feature that will measure the voltage offset error across SRP and SRN from time-to-time as operating conditions change. It subtracts the resulting offset error from normal sense resistor voltage, VSR, for maximum measurement accuracy.

Autocalibration of the ADC begins on entry to SLEEP mode, except if *Temperature( )* is ≤ 5°C or *Temperature( )* = 45°C.

The fuel gauge also performs a single offset when (1) the condition of *AverageCurrent( )* ≤ 100mA and (2) {voltage change since last offset calibration ≥ 256mV} or {temperature change since last offset calibration is greater than 80°C for ≥ 60s}.

Capacity and current measurements will continue at the last measured rate during the offset calibration when these measurements cannot be performed. If the battery voltage drops more than 32mV during the offset calibration, the load current has likely increased considerably; hence, the offset calibration will be aborted.

APPLICATION-SPECIFIC INFORMATION

BATTERY PROFILE STORAGE AND SELECTION

Common Profile Aspects

When a battery pack is removed from system equipment that implements the bq27510, the fuel gauge maintains some of the battery information, in case it is re-inserted. This way the Impedance Track™ algorithm often has a means of recovering battery-status information, thereby maintaining good state-of-charge (SOC) estimates.

The default battery profiles are available to store battery information. They are used to provide the Impedance Track™ algorithm with the default information on the battery type expected to be used with the end-equipment. The default profiles can be used to support batteries of same chemistry but different capacities. Default profiles are programmed by the end-equipment manufacturer. Only one of the default profiles can be selected, and this selection cannot be changed during end-equipment operation.

In addition to the default profiles, the bq27510 maintains two active profiles: *Cell0* and *Cell1*. These tables hold *dynamic* battery data, and keep track of the status for up to two of the most recent batteries used. In most cases the bq27510 can administrate information on two removable battery packs.

Copyright © 2009, Texas Instruments Incorporated

Activities Upon Pack Insertion

First OCV and Impedance Measurement

At power-up the BAT_LOW/BAT_GD pin is inactive, so that the system cannot obtain power from the battery (this depends on actual implementation). In this state, the battery is put in an open-circuit condition. Next, the bq27510 measures its first open-circuit voltage (OCV) via the BAT pin. From the OCV(SOC) table, the SOC of the inserted battery is found. Then the BAT_LOW/BAT_GD pin is made active, and the impedance of the inserted battery is calculated from the measured voltage and the load current: Z(SOC) = (OCV(SOC) – V) / I. This impedance is compared with the impedance of the dynamic profiles, ***Packn***, and the default profiles, ***Defn***, for the same SOC (the letter n depicts either a ***0*** or ***1***).

Reading Application Status

The ***Application Status*** data flash location contains cell profile status information, and can be read using the *ApplicationStatus( )* Extended Command (0x6a). The bit configuration of this function/location is shown in Table 12.

Table 12. *ApplicationStatus( )* Bit Definitions

Application Configuration	bit7	bit6	bit5	bit4	bit3	bit2	bit1	bit0
Byte	–	–	–	–	–	–	–	LU_ PROF(1)

(1) LU_PROF = Last profile used by gas gauge. *Cell0*. last used when cleared. *Cell1* last used when set. Default is 0.

APPLICATION-SPECIFIC FLOW AND CONTROL

The bq27510 supports only one type of battery profile. This profile is stored in both the ***Def0*** and ***Def1*** profiles. The ***Defn*** and ***Packn*** profiles are the same on the first gauge start-up. Then the Impedance Track™ algorithm begins gas gauging, regularly updating ***Packn*** as the battery is used.

When an existing pack is removed from the bq27510 and a different (or same) pack is inserted, cell impedance will be measured immediately after battery detection. The bq27510 chooses the profile which is closest to the measured impedance, starting with the ***Packn*** profiles. That is, if the measured impedance matches ***Pack0***, then the ***Pack0*** profile is used. If the measured impedance matches ***Pack1***, then the ***Pack1*** profile is used. If the measured impedance does not match the impedance stored in either ***Pack0*** or ***Pack1***, the battery pack is deemed new (none of the previously used packs). The ***Def0***/***Def1*** profile is copied into either the Pack0 or ***Pack1*** profile, overwriting the oldest ***Packn*** profile used.

Copyright © 2009, Texas Instruments Incorporated

COMMUNICATIONS

I²C INTERFACE

The bq27510 supports the standard I²C read, incremental read, quick read, one byte write, and incremental write functions. The 7 bit device address (ADDR) is the most significant 7 bits of the hex address and is fixed as 1010101. The 8-bit device address will therefore be 0xAA or 0xAB for write or read, respectively.

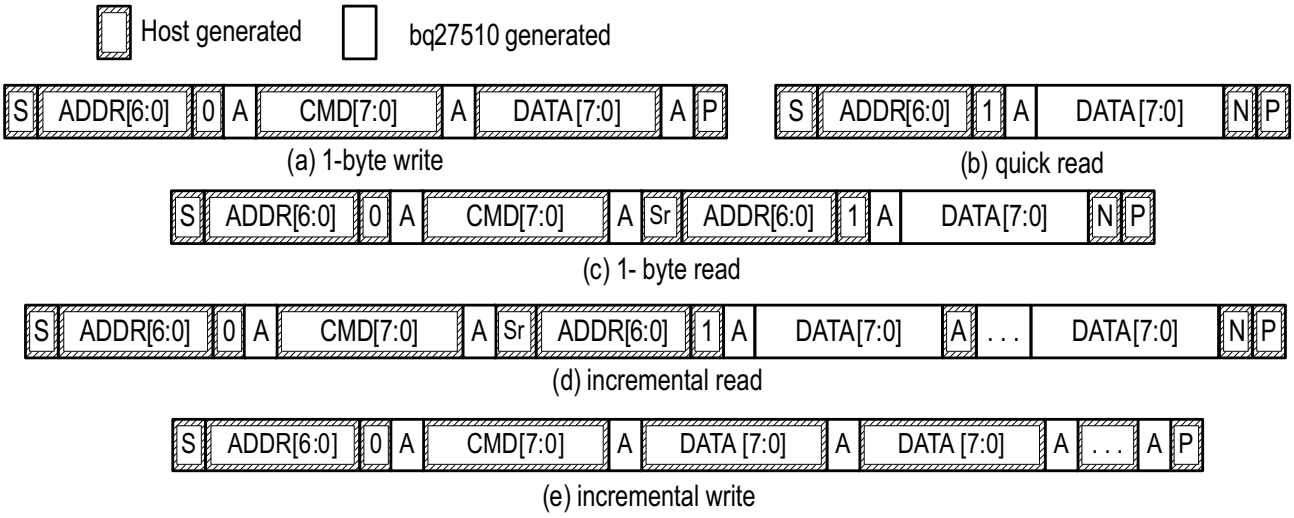

(S = Start, Sr = Repeated Start, A = Acknowledge, N = No Acknowledge, and P = Stop).

Figure 4. Supported I²C Formats

The "quick read" returns data at the address indicated by the address pointer. The address pointer, a register internal to the I²C communication engine, will increment whenever data is acknowledged by the bq27510 or the I²C master. "Quick writes" function in the same manner and are a convenient means of sending multiple bytes to consecutive command locations (such as two-byte commands that require two bytes of data)

The following command sequences are not supported:

Attempt to write a read-only address (NACK after data sent by master):

Attempt to read an address above 0x6B (NACK command):

I²C TIME OUT

The I²C engine will release both SDA and SCL if the I2C bus is held low for about 2 seconds. If the bq27510 was holding the lines, releasing them will free for the master to drive the lines. If an external condition is holding either of the lines low, the I²C engine will enter the low power sleep mode.

I²C COMMAND WAITING TIME

To make sure the correct results of a command with the 400kHz I²C operation, a proper waiting time should be added between issuing command and reading results. For subcommands, the following diagram shows the waiting time required between issuing the control command the reading the status with the exception of checksum command. A 100ms waiting time is required between the checksum command and reading result. For read-write standard commands, a minimum of 2 seconds is required to get the result updated. For read-only standard commands, there is no waiting time required, but the host should not issue all standard commands more than two times per second. Otherwise, the gauge could result in a reset issue due to the expiration of the watchdog timer.

Copyright © 2009, Texas Instruments Incorporated

COMMUNICATIONS (continued)

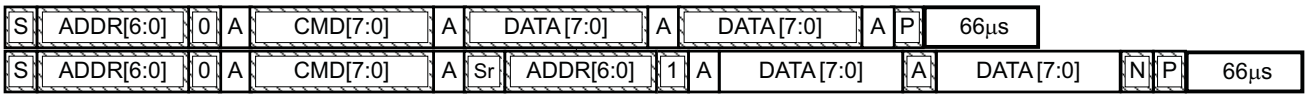

Waiting time between control subcommand and reading results

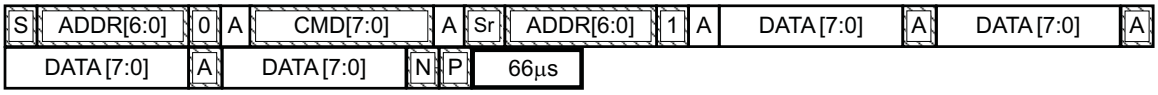

Waiting time between continuous reading results

The I^2C clock stretch could happen in a typical application. A maximum 80ms clock stretch could be observed during the flash updates.

REFERENCE SCHEMATIC

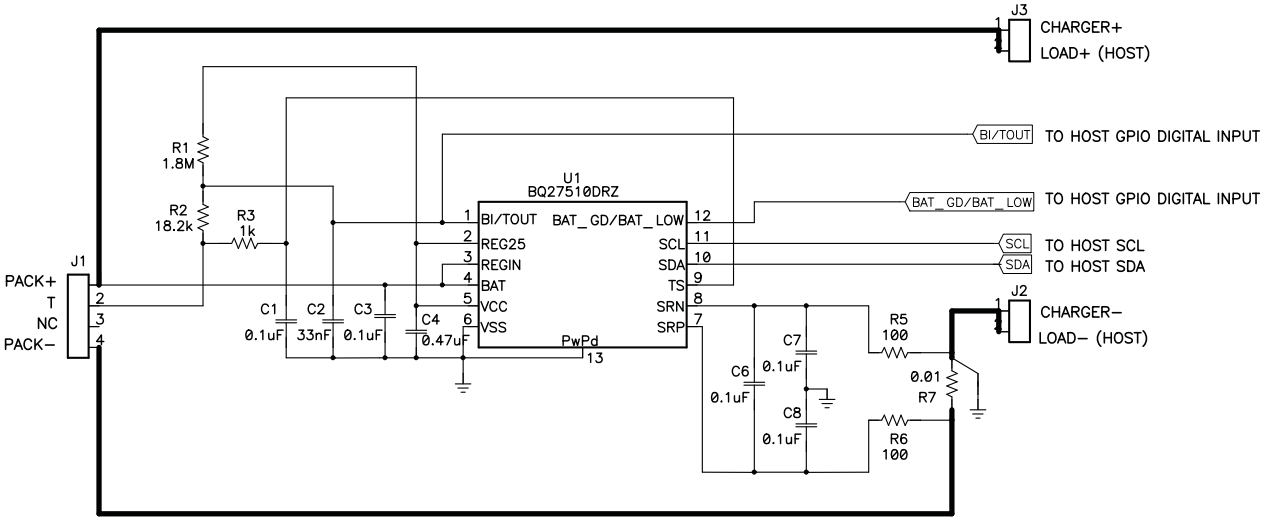

Copyright © 2009, Texas Instruments Incorporated

PACKAGING INFORMATION

Orderable Device	Status (1)	Package Type	Package Drawing	Pins	Package Qty	Eco Plan (2)	Lead finish/ Ball material (6)	MSL Peak Temp (3)	Op Temp (°C)	Device Marking (4/5)	Samples
BQ27510DRZR-G1	ACTIVE	SON	DRZ	12	3000	RoHS & Green	NIPDAU	Level-2-260C-1 YEAR	-40 to 85	BQ 7510	Samples
BQ27510DRZT-G1	ACTIVE	SON	DRZ	12	250	RoHS & Green	NIPDAU	Level-2-260C-1 YEAR	-40 to 85	BQ 7510	Samples

(1) The marketing status values are defined as follows:
ACTIVE: Product device recommended for new designs.
LIFEBUY: TI has announced that the device will be discontinued, and a lifetime-buy period is in effect.
NRND: Not recommended for new designs. Device is in production to support existing customers, but TI does not recommend using this part in a new design.
PREVIEW: Device has been announced but is not in production. Samples may or may not be available.
OBSOLETE: TI has discontinued the production of the device.

(2) **RoHS:** TI defines "RoHS" to mean semiconductor products that are compliant with the current EU RoHS requirements for all 10 RoHS substances, including the requirement that RoHS substance do not exceed 0.1% by weight in homogeneous materials. Where designed to be soldered at high temperatures, "RoHS" products are suitable for use in specified lead-free processes. TI may reference these types of products as "Pb-Free".
RoHS Exempt: TI defines "RoHS Exempt" to mean products that contain lead but are compliant with EU RoHS pursuant to a specific EU RoHS exemption.
Green: TI defines "Green" to mean the content of Chlorine (Cl) and Bromine (Br) based flame retardants meet JS709B low halogen requirements of <=1000ppm threshold. Antimony trioxide based flame retardants must also meet the <=1000ppm threshold requirement.

(3) MSL, Peak Temp. - The Moisture Sensitivity Level rating according to the JEDEC industry standard classifications, and peak solder temperature.

(4) There may be additional marking, which relates to the logo, the lot trace code information, or the environmental category on the device.

(5) Multiple Device Markings will be inside parentheses. Only one Device Marking contained in parentheses and separated by a "~" will appear on a device. If a line is indented then it is a continuation of the previous line and the two combined represent the entire Device Marking for that device.

(6) Lead finish/Ball material - Orderable Devices may have multiple material finish options. Finish options are separated by a vertical ruled line. Lead finish/Ball material values may wrap to two lines if the finish value exceeds the maximum column width.

Important Information and Disclaimer: The information provided on this page represents TI's knowledge and belief as of the date that it is provided. TI bases its knowledge and belief on information provided by third parties, and makes no representation or warranty as to the accuracy of such information. Efforts are underway to better integrate information from third parties. TI has taken and continues to take reasonable steps to provide representative and accurate information but may not have conducted destructive testing or chemical analysis on incoming materials and chemicals. TI and TI suppliers consider certain information to be proprietary, and thus CAS numbers and other limited information may not be available for release.

In no event shall TI's liability arising out of such information exceed the total purchase price of the TI part(s) at issue in this document sold by TI to Customer on an annual basis.

TAPE AND REEL INFORMATION

REEL DIMENSIONS

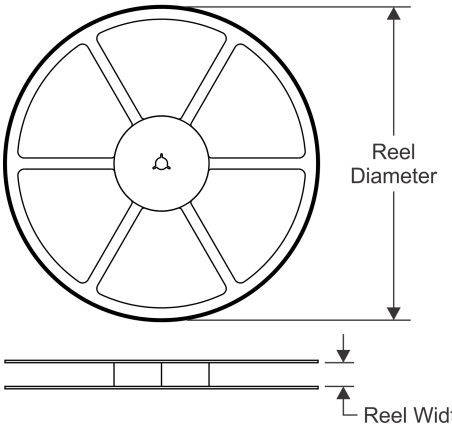

TAPE DIMENSIONS

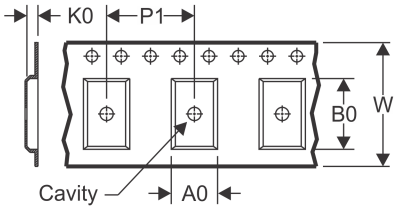

A0	Dimension designed to accommodate the component width
B0	Dimension designed to accommodate the component length
K0	Dimension designed to accommodate the component thickness
W	Overall width of the carrier tape
P1	Pitch between successive cavity centers

QUADRANT ASSIGNMENTS FOR PIN 1 ORIENTATION IN TAPE

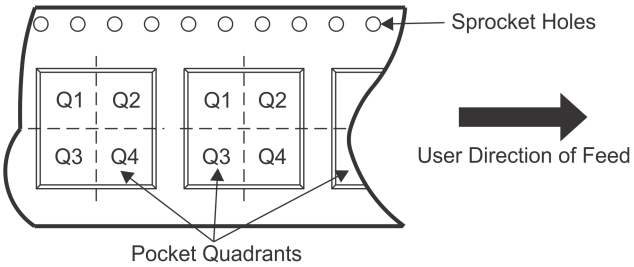

*All dimensions are nominal

Device	Package Type	Package Drawing	Pins	SPQ	Reel Diameter (mm)	Reel Width W1 (mm)	A0 (mm)	B0 (mm)	K0 (mm)	P1 (mm)	W (mm)	Pin1 Quadrant
BQ27510DRZR-G1	SON	DRZ	12	3000	330.0	12.4	2.8	4.3	1.2	4.0	12.0	Q2
BQ27510DRZT-G1	SON	DRZ	12	250	330.0	12.4	2.8	4.3	1.2	4.0	12.0	Q2

TAPE AND REEL BOX DIMENSIONS

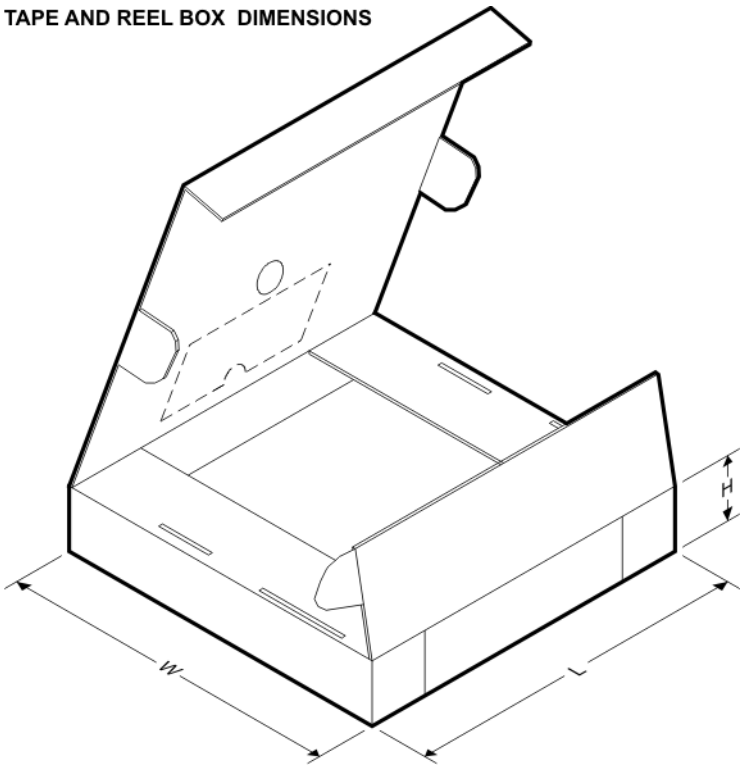

*All dimensions are nominal

Device	Package Type	Package Drawing	Pins	SPQ	Length (mm)	Width (mm)	Height (mm)
BQ27510DRZR-G1	SON	DRZ	12	3000	367.0	367.0	38.0
BQ27510DRZT-G1	SON	DRZ	12	250	367.0	367.0	38.0

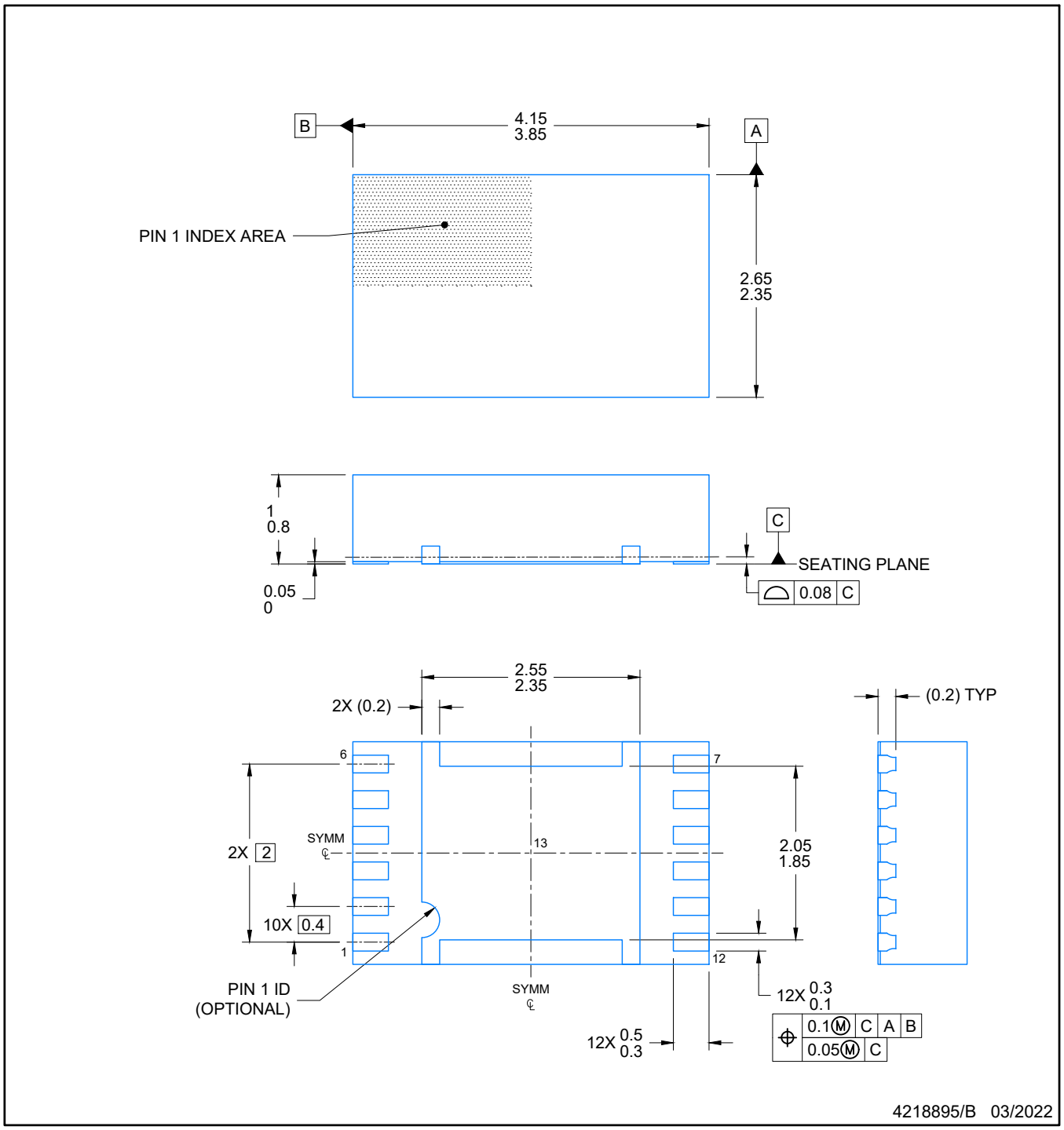

NOTES:

1. All linear dimensions are in millimeters. Any dimensions in parenthesis are for reference only. Dimensioning and tolerancing per ASME Y14.5M.
2. This drawing is subject to change without notice.
3. The package thermal pad must be soldered to the printed circuit board for optimal thermal and mechanical performance.

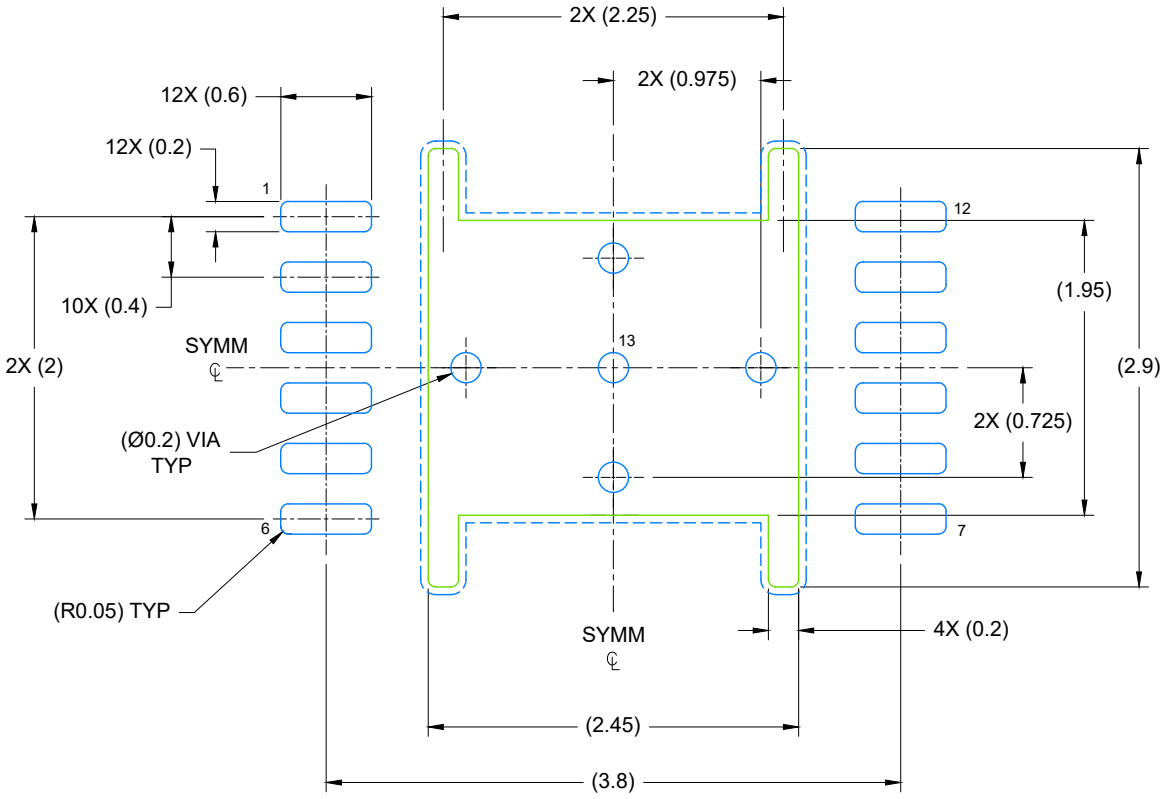

LAND PATTERN EXAMPLE
EXPOSED METAL SHOWN
SCALE: 20X

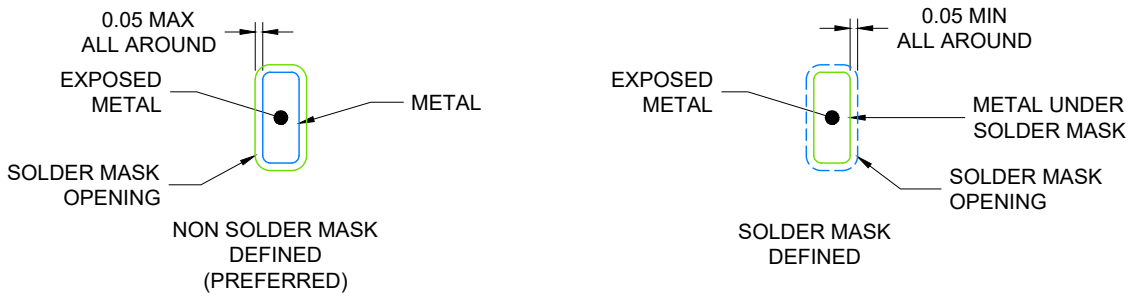

SOLDER MASK DETAILS

4218895/B 03/2022

NOTES: (continued)

4. This package is designed to be soldered to a thermal pad on the board. For more information, see Texas Instruments literature number SLUA271 (www.ti.com/lit/slua271).
5. Vias are optional depending on application, refer to device data sheet. If any vias are implemented, refer to their locations shown on this view. It is recommended that vias under paste be filled, plugged or tented.

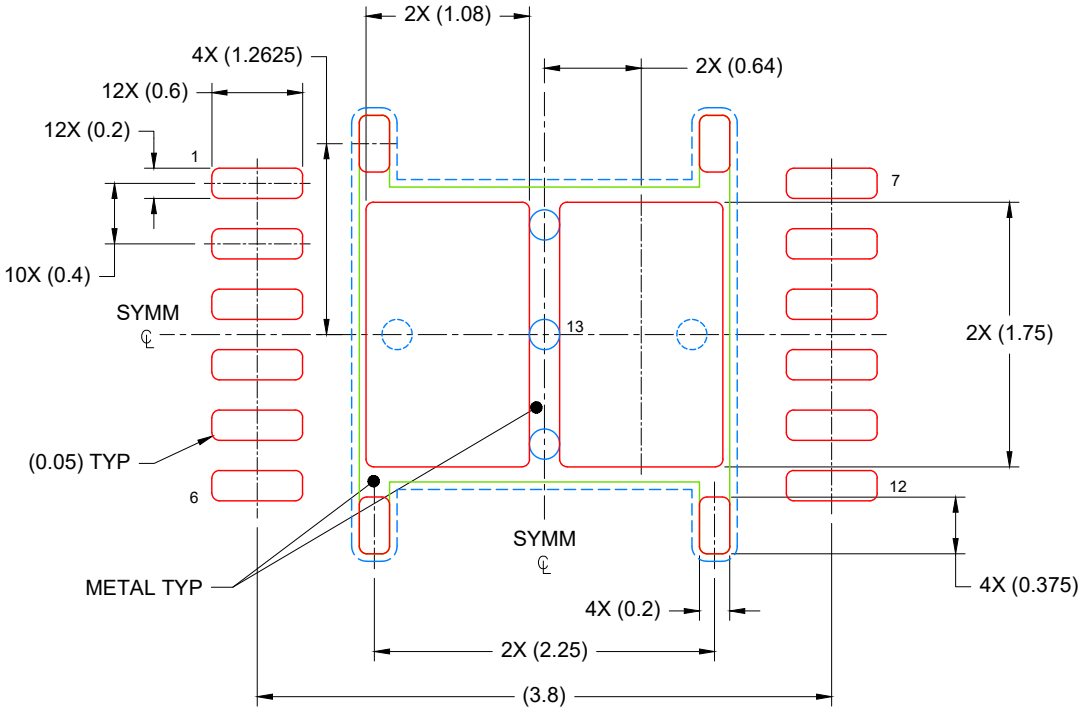

SOLDER PASTE EXAMPLE
BASED ON 0.1 mm THICK STENCIL

EXPOSED PAD
79% PRINTED COVERAGE BY AREA
SCALE: 20X

4218895/B 03/2022

NOTES: (continued)

6. Laser cutting apertures with trapezoidal walls and rounded corners may offer better paste release. IPC-7525 may have alternate design recommendations.

IMPORTANT NOTICE AND DISCLAIMER

TI PROVIDES TECHNICAL AND RELIABILITY DATA (INCLUDING DATA SHEETS), DESIGN RESOURCES (INCLUDING REFERENCE DESIGNS), APPLICATION OR OTHER DESIGN ADVICE, WEB TOOLS, SAFETY INFORMATION, AND OTHER RESOURCES “AS IS” AND WITH ALL FAULTS, AND DISCLAIMS ALL WARRANTIES, EXPRESS AND IMPLIED, INCLUDING WITHOUT LIMITATION ANY IMPLIED WARRANTIES OF MERCHANTABILITY, FITNESS FOR A PARTICULAR PURPOSE OR NON-INFRINGEMENT OF THIRD PARTY INTELLECTUAL PROPERTY RIGHTS.

These resources are intended for skilled developers designing with TI products. You are solely responsible for (1) selecting the appropriate TI products for your application, (2) designing, validating and testing your application, and (3) ensuring your application meets applicable standards, and any other safety, security, regulatory or other requirements.

These resources are subject to change without notice. TI grants you permission to use these resources only for development of an application that uses the TI products described in the resource. Other reproduction and display of these resources is prohibited. No license is granted to any other TI intellectual property right or to any third party intellectual property right. TI disclaims responsibility for, and you will fully indemnify TI and its representatives against, any claims, damages, costs, losses, and liabilities arising out of your use of these resources.

TI’s products are provided subject to TI’s Terms of Sale or other applicable terms available either on ti.com or provided in conjunction with such TI products. TI’s provision of these resources does not expand or otherwise alter TI’s applicable warranties or warranty disclaimers for TI products.

TI objects to and rejects any additional or different terms you may have proposed.

Mailing Address: Texas Instruments, Post Office Box 655303, Dallas, Texas 75265
Copyright © 2022, Texas Instruments Incorporated