TEXAS INSTRUMENTS
Data sheet acquired from Harris Semiconductor
SCHS048C – Revised October 2003

CD4054B, CD4055B, CD4056B Types

CMOS Liquid-Crystal Display Drivers

High-Voltage Types (20-Volt Rating)

CD4054B – 4-Segment Display Driver
CD4055B – BCD to 7-Segment Decoder/Driver with "Display-Frequency" Output
CD4056B – BCD to 7-Segment Decoder/Driver with Strobed-Latch Function

■ CD4055B and CD4056B types are single-digit BCD-to-7-segment decoder/driver circuits that provide level-shifting functions on the chip. This feature permits the BCD input-signal swings (V_{DD} to V_{SS}) to be the same as or different from the 7-segment output-signal swings (V_{DD} to V_{EE}). For example, the BCD input-signal swings (V_{DD} to V_{SS}) may be as small as 0 to –3 V, whereas the output-display drive-signal swing (V_{DD} to V_{EE}) may be as large as from 0 to –15V. If V_{DD} to V_{EE} exceeds 15 V, V_{DD} to V_{SS} should be at least 4V (0 to –4V).

The 7-segment outputs are controlled by the DISPLAY-FREQUENCY (DF) input which causes the selected segment outputs to be low, high, or a square-wave output (for liquid-crystal displays). When the DF input is low the output segments will be high when selected by the BCD inputs. When the DF input is high, the output segments will be low when selected by the BCD inputs. When a square-wave is present at the DF input, the selected segments will have a square-wave output that is 180° out of phase with the DF input. Those segments which are not selected will have a square-wave output that is in phase with the input. DF square-wave repetition rates for liquid-crystal displays usually range from 30 Hz (well above flicker rate) to 200 Hz (well below the upper limit of the liquid-crystal frequency response). The CD4055B provides a level-shifted high-amplitude DF output which is required for driving the common electrode in liquid-crystal displays. The CD4056B provides a strobed-latch function at the BCD inputs. Decoding of all input combinations on the CD4055B and CD4056B provides displays of 0 to 9 as well as L, P, H, A, –, and a blank position.

The CD4054B provides level shifting similar to the CD4055B and CD4056B independently strobed latches, and common DF control on 4 signal lines. The CD4054B is intended to provide drive-signal compatibility with the CD4055B and CD4056B 7-segment decoder types for the decimal point, colon, polarity, and similar display lines. A level-shifted high-amplitude DF output can be obtained from any CD4054B output line by connecting the corresponding input and strobe lines to a low and high level, respectively and applying a square wave to DF_{IN}. The CD4054B may also be utilized for logic-level "up conversion" or "down conversion". For example, input-signal swings (V_{DD} to V_{SS}) from +5 to 0 V can be converted to output-signal swings (V_{DD} to V_{EE}) of +5 to –5 V. The level-shifted function on all three types permits the use of different input- and output-signal swings. The input swings from a low level of V_{SS} to a high level of V_{DD} while the output swings from a low level of V_{EE} to the same high level of V_{DD}. Thus, the input and output swings can be selected independently of each other over a 3-to-18 V range. V_{SS} may be connected to V_{EE} when no level-shift function is required.

For the CD4054B and CD4056B, data are transferred from input to output by placing a high voltage level at the strobe input. A low voltage level at the strobe input latches the data input and the corresponding output segments remain selected (or non-selected) while the strobe is low.

Whenever the level-shifting function is required, the CD4055B can be used by itself to drive a liquid-crystal display (Fig.16 and Fig.20). The CD4056B, however, must be used together with a CD4054B to provide the common DF output (Fig.19). The capability of extending the voltage swing on the negative end (this voltage cannot be extended on the positive end) can be used to advantage in the setup of Fig.18. Fig.17 is common to all three types.

The CD4054B-, CD4055B-, and CD4056B-series types are supplied in 16-lead dual-in-line plastic packages (E suffix), 16-lead small-outline packages (M, M96, MT, and NSR suffixes), and 16-lead thin shrink small-outline packages (PW and PWR suffixes). The CD4054B- and CD4056B-series types also are supplied in 16-lead hermetic dual-in-line ceramic packages (F3A suffix).

Features:

- **Operation of liquid crystals with CMOS circuits provides ultra-low-power displays**
- **Equivalent ac output drive for liquid-crystal displays – no external capacitor required**
- **Voltage doubling across display, e.g. $V_{DD} - V_{EE}$ = 18 V results in effective 36 V p-p drive across selected display segments**
- **Low- or high-output level dc drive for other types of displays**
- **On-chip logic-level conversion for different input- and output-level swings**
- **Full decoding of all input combinations: 0-9, L, H, P, A,–, and blank positions**
- **Strobed-latch function—CD4054B Series and CD4056B Series**
- **DISPLAY-FREQUENCY (DF) output for liquid-crystal common-line drive signal—CD4055B Series (CD4054B Series also: see introductory text)**
- **100% tested for quiescent current at 20 V**
- **Maximum input current of 1 μA at 18 V over full package temperature range; 100 nA at 18 V and 25°C**
- **Noise margin (over full package temperature range):**
  1 V at V_{DD} = 5 V
  2 V at V_{DD} = 10 V
  2.5 V at V_{DD} = 15 V
- **5-V, 10-V, and 15-V parametric ratings**

Applications

- **General-purpose displays**
- **Calculators and meters**
- **Wall and table clocks**
- **Industrial control panels**
- **Portable lab instruments**
- **Panel meters**
- **Auto dashboard displays**
- **Appliance control panels**

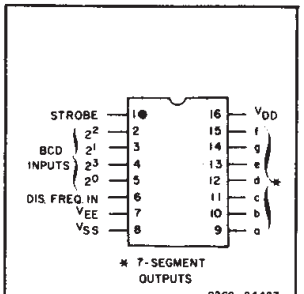

CD4056B Terminal Assignment

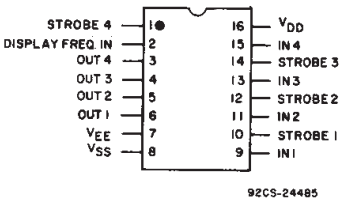

CD4054B Terminal Assignment

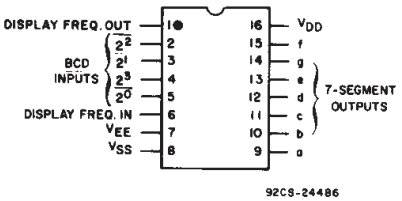

CD4055B Terminal Assignment

Copyright © 2003, Texas Instruments Incorporated

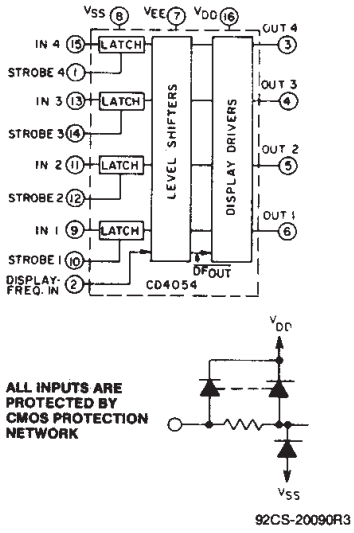

Fig.1 – CD4054B functional diagram.

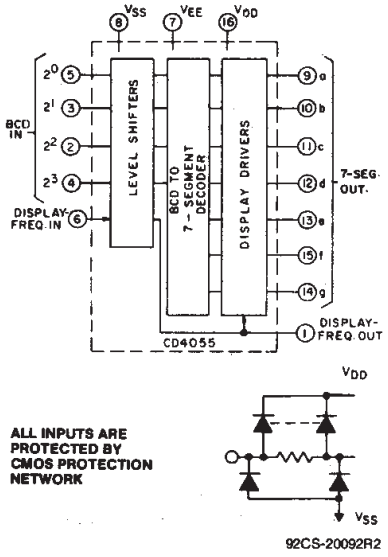

Fig.2 – CD4055B functional diagram.

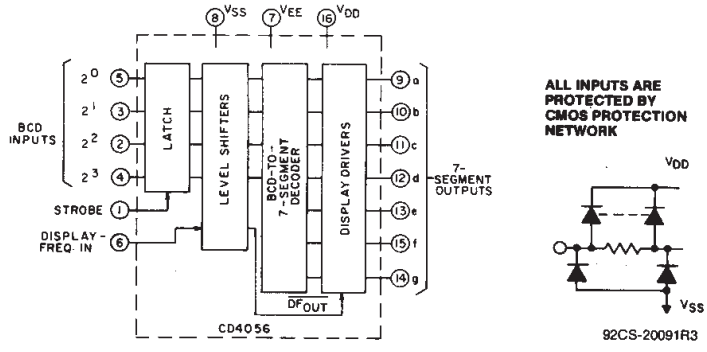

Fig.3 – CD4056B functional diagram.

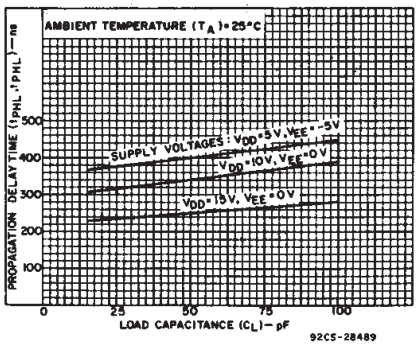

Fig.4 – Typical propagation delay time vs. load capacitance for CD4054B.

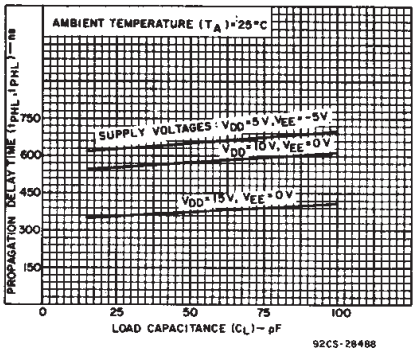

Fig.5 – Typical propagation delay time vs. load capacitance for CD4055 and CD4056B.

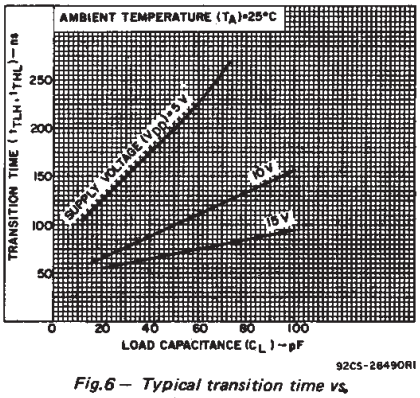

Fig.6 – Typical transition time vs. load capacitance.

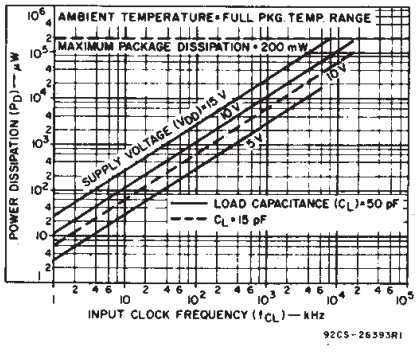

Fig.7 – Typical input clock frequency vs. power dissipation.

CD4054B TRUTH TABLE

DF	IN	ST	OUT
0	0	1	0
1	0	1	1
0	1	1	1
1	1	1	0
X	X	0	*

X = Don't Care.

*Depends upon the input mode previously applied when ST = 1.

TRUTH TABLE FOR CD4055B and CD4056B

INPUT CODE				OUTPUT STATE							DISPLAY CHARACTER
2^3	2^2	2^1	2^0	a	b	c	d	e	f	g	
0	0	0	0	1	1	1	1	1	1	0	0
0	0	0	1	0	1	1	0	0	0	0	1
0	0	1	0	1	1	0	1	1	0	1	2
0	0	1	1	1	1	1	1	0	0	1	3
0	1	0	0	0	1	1	0	0	1	1	4
0	1	0	1	1	0	1	1	0	1	1	5
0	1	1	0	1	0	1	1	1	1	1	6
0	1	1	1	1	1	1	0	0	0	0	7
1	0	0	0	1	1	1	1	1	1	1	8
1	0	0	1	1	1	1	1	0	1	1	9
1	0	1	0	0	0	0	1	1	1	0	
1	0	1	1	0	1	1	0	1	1	1	
1	1	0	0	1	1	0	0	1	1	1	
1	1	0	1	1	1	1	0	1	1	1	
1	1	1	0	0	0	0	0	0	0	1	—
1	1	1	1	0	0	0	0	0	0	0	BLANK

MAXIMUM RATINGS, *Absolute-Maximum Values:*

DC SUPPLY-VOLTAGE RANGE, (V_{DD})
Voltages referenced to V_{SS} Terminal) ..... -0.5V to +20V
INPUT VOLTAGE RANGE, ALL INPUTS ..... -0.5V to V_{DD} +0.5V
DC INPUT CURRENT, ANY ONE INPUT ..... ±10mA
POWER DISSIPATION PER PACKAGE (P_D):
For T_A = -55°C to +100°C 500mW
For T_A = +100°C to +125°C ..... Derate Linearity at 12mW/°C to 200mW
DEVICE DISSIPATION PER OUTPUT TRANSISTOR
FOR T_A = FULL PACKAGE-TEMPERATURE RANGE (All Package Types) 100mW
OPERATING-TEMPERATURE RANGE (T_A) ..... -55°C to +125°C
STORAGE TEMPERATURE RANGE (T_{stg}) ..... -65°C to +150°C
LEAD TEMPERATURE (DURING SOLDERING):
At distance 1/16 ± 1/32 inch (1.59 ± 0.79mm) from case for 10s max ..... +265°C

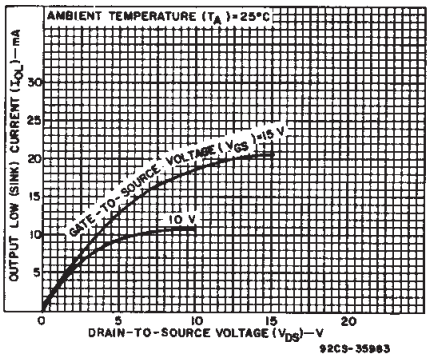

Fig.8 – Typical n-channel output low (sink) current characteristics.

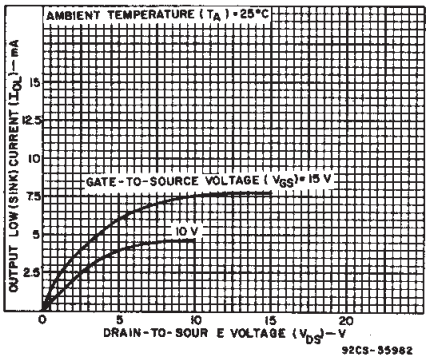

Fig.9 – Minimum n-channel output low (sink) current characteristics.

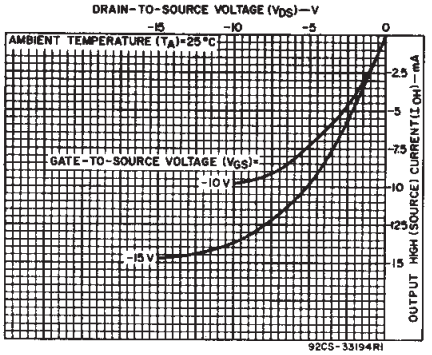

Fig.10 – Typical p-channel output high (source) current characteristics.

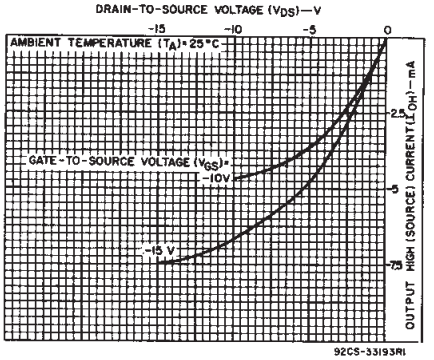

Fig. 13 – Minimum p-channel output high (source) current characteristics.

STATIC ELECTRICAL CHARACTERISTICS

Characteristic	CONDITIONS V_{EE} (V)	V_{SS} (V)	V_O (V)	V_{IN} (V)	V_{DD} (V)	LIMITS AT INDICATED TEMPERATURES (°C) −55°	−40°	+85°	+125°	+25°C Min.	Typ.	Max.	Units
Quiescent Device Current, I_{DD} MAX.	-5	0			5	5		150	150	–	0.04	5	μA
	0	0			10	10		300	300	–	0.04	10	
	0	0			15	20		600	600	–	0.04	20	
	0	0			20	100		3000	3000	–	0.08	100	
Output Voltage: Low Level, V_{OL} MAX.	0	0		0,5	5	0.05				–	0	0.05	V
	0	0		0,10	10	0.05				–	0	0.05	
	0	0		0,15	15	0.05				–	0	0.05	
High Level, V_{OH} MIN.	0	0		0,5	5	4.95				4.95	5	–	
	0	0		0,10	10	9.95				9.95	10	–	
	0	0		0,15	15	14.95				14.95	15	–	
Input Low Voltage, V_{IL} MAX.	0	0	0.5, 4.5		5	1.5				–	–	1.5	V
	0	0	1,9		10	3				–	–	3	
	0	0	1.5,13.5		15	4				–	–	4	
Input High Voltage, V_{IH} MIN.	-5	0	0.5,4.5		5	3.5				3.5	–	–	
	0	0	1,9		10	7				7	–	–	
	0	0	1.5,13.5		15	11				11	–	–	
Output Low (Sink) Current, I_{OL}	-5	0	-4.5		5	0.98	0.92	0.67	0.55	0.8	1.6	–	mA
	0	0	0.5		10	0.98	0.92	0.67	0.55	0.8	1.6	–	
	0	0	1.5		15	3.6	3.4	2.4	2	2.9	5.8	–	
Output High (Source) Current, I_{OH}	-5	0	4.5		5	-0.6	-0.55	-0.35	-0.3	-0.45	-0.9	–	
	0	0	9.5		10	-0.6	-0.55	-0.35	-0.3	-0.45	-0.9	–	
	0	0	13.5		15	-1.9	-1.8	-1.2	-1.1	-1.5	-3	–	
Input Current, I_{IN}	0	0	–	0,18	18	±0.1	±0.1	±1	±1	–	$\pm 10^{-5}$	±0.1	μA

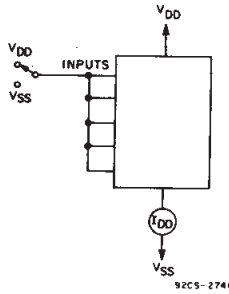

Fig. 11 – Quiescent-device-current test circuit.

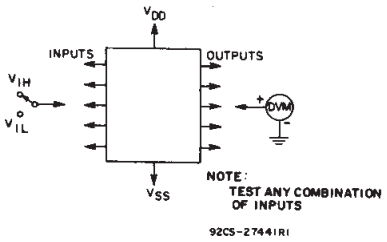

Fig. 12 – Input-voltage test circuit.

DYNAMIC ELECTRICAL CHARACTERISTICS at $T_A = 25^oC$, $C_L = 50$ pF, Input $t_r, t_f = 20$ ns, $R_L = 200$ kΩ

CHARACTERISTIC	CONDITIONS V_{EE} (V)	V_{SS} (V)	V_{DD} (V)	LIMITS ALL PACKAGE TYPES CD4054 Typ.	CD4054 Max.	CD4055,CD4056 Typ.	CD4055,CD4056 Max.	UNITS
Propagation Delay Time, t_{PHL}, t_{PLH} (Any Input to Any Output)	–5	0	5	400	800	650	1300	ns
	0	0	10	340	680	575	1150	
	0	0	15	250	500	375	750	
Transition Time, t_{THL}, t_{TLH} (Any Output)	–5	0	5	100	200	100	200	ns
	0	0	10	100	200	100	200	
	0	0	15	75	150	75	150	
Minimum Data Setup Time, t_S*	–5	0	5	110	220	110	220	ns
	0	0	10	50	100	50	100	
			15	35	70	35	70	
Minimum Strobe Pulse Width, t_W*	–5	0	5	110	220	110	220	ns
	0	0	10	50	100	50	100	
	0	0	15	35	70	35	70	
Input Capacitance, C_{IN} (Any Input)	–	–	–	5	7.5	5	7.5	pF

* CD4054 and CD4056 only.

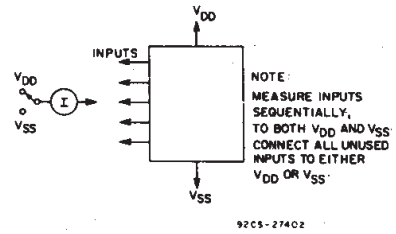

Fig. 14 – Input-current test circuit.

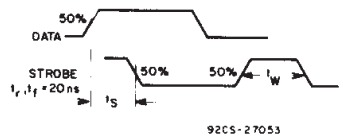

Fig. 15 – Data setup time and strobe pulse duration.

RECOMMENDED OPERATING CONDITIONS at $T_A = 25^oC$ (Unless otherwise specified)

For maximum reliability, nominal operating conditions should be selected so that operation is always within the following ranges.

CHARACTERISTIC	V_{EE} (V)	V_{SS} (V)	V_{DD} (V)	LIMITS Min.	Max.	UNITS
Supply Voltage Range: (At T_A = Full Package Temperature Range)				3	18	V
Setup Time (t_s)●	–5	0	5	220	–	ns
	0	0	10	100	–	
	0	0	15	70	–	
Strobe Pulse Width (t_W)●	–5	0	5	220	–	ns
	0	0	10	100	–	
	0	0	15	70	–	

● For CD4054 and CD4056 only.

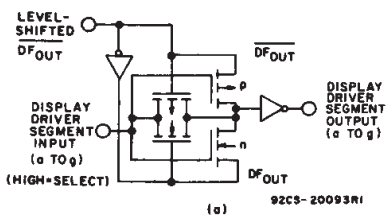

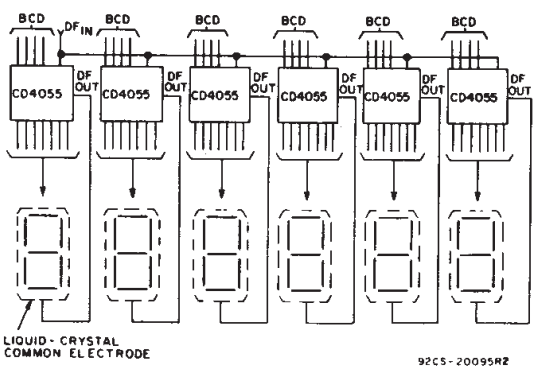

Fig. 16 – Clock display: $V_{DD} = 0$ V, $V_{SS} = -5$ V, $V_{EE} = -15$ V, $DF_{IN} = 30$ Hz square wave.

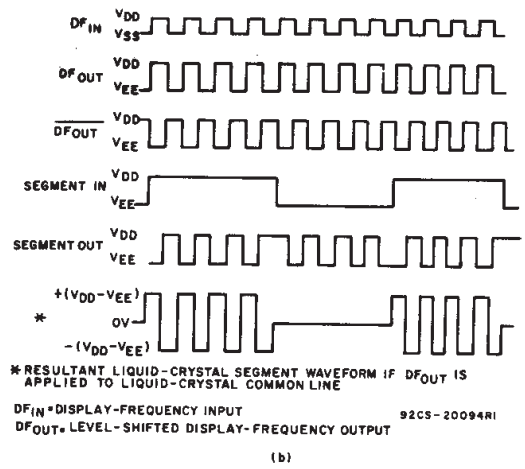

Fig. 17 – Display-driver circuit for one segment line and waveforms.

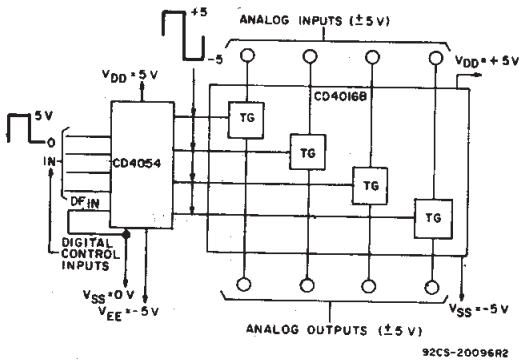

Fig.18 – Digital (0 to +5 V) to bidirectional analog control (+5 to −5 V) level shifter.

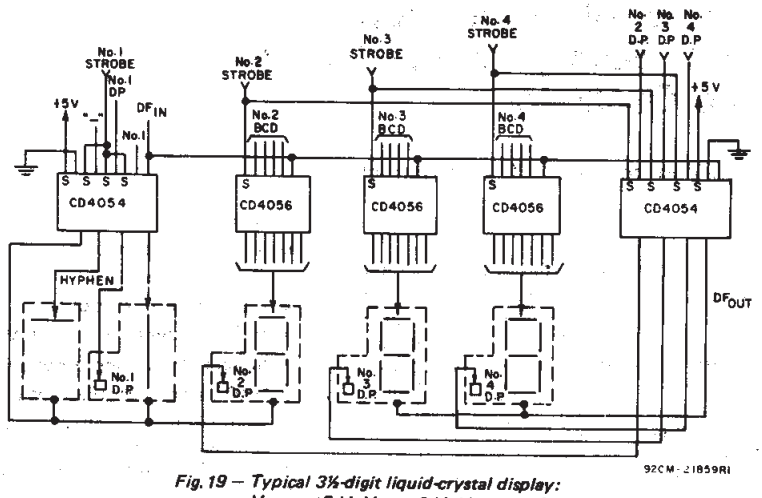

Fig.19 – Typical 3½-digit liquid-crystal display: V_{DD} = +5 V, V_{SS} = 0 V, V_{EE} = −10 V, DF_{IN} = 30 Hz square wave.

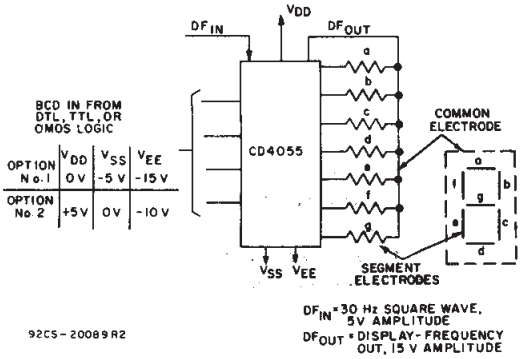

Fig.20 – Single-digit liquid-crystal display.

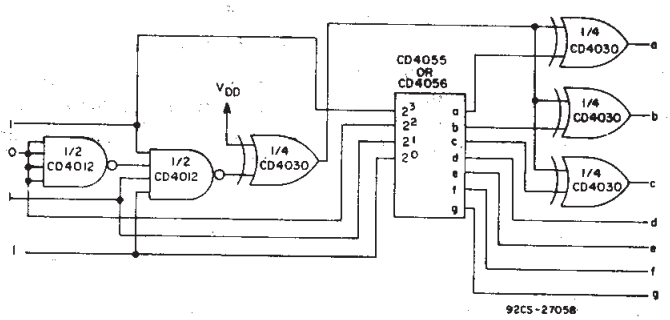

Fig.21 – Conversion of "H" display to "F" display.

In addition to the letters L, H, P, and A (See the truth table), five other letters can be displayed through the use of simple logic circuits preceding and following the CD4055B or CD4056B devices. Fig.21 is an example of a circuit that converts an "H" display (code 1011) to an "F" display. One condition that must be met is that $V_{EE}=V_{SS}$. If $V_{EE}\neq V_{SS}$, the CD4054B must be used to level shift in the appropriate places.

In a similar manner the letters C, E, J, and U can be displayed. These circuits can also be used to drive LED displays provided the exclusive-OR gates have sufficient output-current drive.

The letters B, D, G, I, O, and S may be represented by the codes for numbers 8, 0, 6, 1, 0, and 5, respectively, when there is preknowledge that only letters are to be displayed.

Dimensions in parentheses are in millimeters and are derived from the basic inch dimensions as indicated. Grid graduations are in mils (10^{-3} inch).

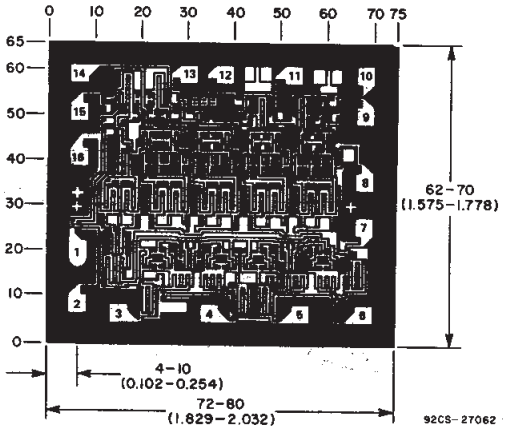

Dimensions and pad layout for CD4054BH.

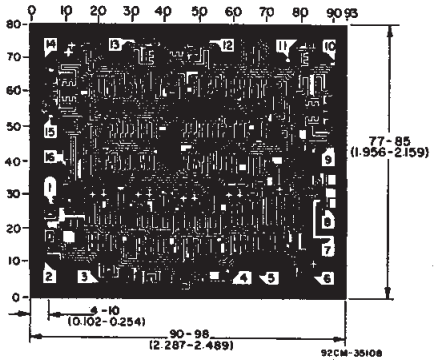

Dimensions and pad layout for CD4055BH

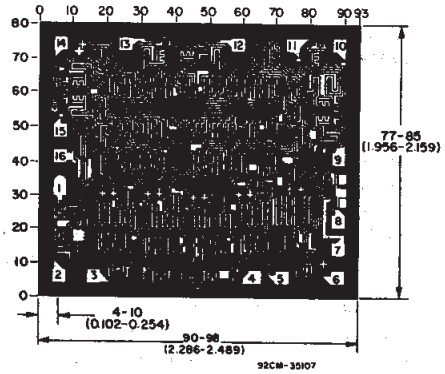

Dimensions and pad layout for CD4056BH

PACKAGING INFORMATION

Orderable Device	Status (1)	Package Type	Package Drawing	Pins	Package Qty	Eco Plan (2)	Lead finish/ Ball material (6)	MSL Peak Temp (3)	Op Temp (°C)	Device Marking (4/5)	Samples
CD4054BE	ACTIVE	PDIP	N	16	25	RoHS & Green	NIPDAU	N / A for Pkg Type	-55 to 125	CD4054BE	Samples
CD4054BF3A	ACTIVE	CDIP	J	16	1	Non-RoHS & Green	SNPB	N / A for Pkg Type	-55 to 125	CD4054BF3A	Samples
CD4054BM	ACTIVE	SOIC	D	16	40	RoHS & Green	NIPDAU	Level-1-260C-UNLIM	-55 to 125	CD4054BM	Samples
CD4054BM96	ACTIVE	SOIC	D	16	2500	RoHS & Green	NIPDAU	Level-1-260C-UNLIM	-55 to 125	CD4054BM	Samples
CD4054BPW	ACTIVE	TSSOP	PW	16	90	RoHS & Green	NIPDAU	Level-1-260C-UNLIM	-55 to 125	CM054B	Samples
CD4055BE	ACTIVE	PDIP	N	16	25	RoHS & Green	NIPDAU	N / A for Pkg Type	-55 to 125	CD4055BE	Samples
CD4055BM	ACTIVE	SOIC	D	16	40	RoHS & Green	NIPDAU	Level-1-260C-UNLIM	-55 to 125	CD4055BM	Samples
CD4055BPW	ACTIVE	TSSOP	PW	16	90	RoHS & Green	NIPDAU	Level-1-260C-UNLIM	-55 to 125	CM055B	Samples
CD4056BE	ACTIVE	PDIP	N	16	25	RoHS & Green	NIPDAU	N / A for Pkg Type	-55 to 125	CD4056BE	Samples
CD4056BF3A	ACTIVE	CDIP	J	16	1	Non-RoHS & Green	SNPB	N / A for Pkg Type	-55 to 125	CD4056BF3A	Samples
CD4056BM	ACTIVE	SOIC	D	16	40	RoHS & Green	NIPDAU	Level-1-260C-UNLIM	-55 to 125	CD4056BM	Samples
CD4056BM96	ACTIVE	SOIC	D	16	2500	RoHS & Green	NIPDAU	Level-1-260C-UNLIM	-55 to 125	CD4056BM	Samples
CD4056BME4	ACTIVE	SOIC	D	16	40	RoHS & Green	NIPDAU	Level-1-260C-UNLIM	-55 to 125	CD4056BM	Samples
CD4056BMG4	ACTIVE	SOIC	D	16	40	RoHS & Green	NIPDAU	Level-1-260C-UNLIM	-55 to 125	CD4056BM	Samples
CD4056BMT	ACTIVE	SOIC	D	16	250	RoHS & Green	NIPDAU	Level-1-260C-UNLIM	-55 to 125	CD4056BM	Samples
CD4056BMTG4	ACTIVE	SOIC	D	16	250	RoHS & Green	NIPDAU	Level-1-260C-UNLIM	-55 to 125	CD4056BM	Samples
CD4056BPW	ACTIVE	TSSOP	PW	16	90	RoHS & Green	NIPDAU	Level-1-260C-UNLIM	-55 to 125	CM056B	Samples

(1) The marketing status values are defined as follows:
ACTIVE: Product device recommended for new designs.
LIFEBUY: TI has announced that the device will be discontinued, and a lifetime-buy period is in effect.
NRND: Not recommended for new designs. Device is in production to support existing customers, but TI does not recommend using this part in a new design.

PREVIEW: Device has been announced but is not in production. Samples may or may not be available.
OBSOLETE: TI has discontinued the production of the device.

(2) **RoHS:** TI defines "RoHS" to mean semiconductor products that are compliant with the current EU RoHS requirements for all 10 RoHS substances, including the requirement that RoHS substance do not exceed 0.1% by weight in homogeneous materials. Where designed to be soldered at high temperatures, "RoHS" products are suitable for use in specified lead-free processes. TI may reference these types of products as "Pb-Free".
RoHS Exempt: TI defines "RoHS Exempt" to mean products that contain lead but are compliant with EU RoHS pursuant to a specific EU RoHS exemption.
Green: TI defines "Green" to mean the content of Chlorine (Cl) and Bromine (Br) based flame retardants meet JS709B low halogen requirements of <=1000ppm threshold. Antimony trioxide based flame retardants must also meet the <=1000ppm threshold requirement.

(3) MSL, Peak Temp. - The Moisture Sensitivity Level rating according to the JEDEC industry standard classifications, and peak solder temperature.

(4) There may be additional marking, which relates to the logo, the lot trace code information, or the environmental category on the device.

(5) Multiple Device Markings will be inside parentheses. Only one Device Marking contained in parentheses and separated by a "~" will appear on a device. If a line is indented then it is a continuation of the previous line and the two combined represent the entire Device Marking for that device.

(6) Lead finish/Ball material - Orderable Devices may have multiple material finish options. Finish options are separated by a vertical ruled line. Lead finish/Ball material values may wrap to two lines if the finish value exceeds the maximum column width.

Important Information and Disclaimer: The information provided on this page represents TI's knowledge and belief as of the date that it is provided. TI bases its knowledge and belief on information provided by third parties, and makes no representation or warranty as to the accuracy of such information. Efforts are underway to better integrate information from third parties. TI has taken and continues to take reasonable steps to provide representative and accurate information but may not have conducted destructive testing or chemical analysis on incoming materials and chemicals. TI and TI suppliers consider certain information to be proprietary, and thus CAS numbers and other limited information may not be available for release.

In no event shall TI's liability arising out of such information exceed the total purchase price of the TI part(s) at issue in this document sold by TI to Customer on an annual basis.

OTHER QUALIFIED VERSIONS OF CD4054B, CD4054B-MIL, CD4056B, CD4056B-MIL :

- Catalog : CD4054B, CD4056B
- Military : CD4054B-MIL, CD4056B-MIL

NOTE: Qualified Version Definitions:

- Catalog - TI's standard catalog product
- Military - QML certified for Military and Defense Applications

TAPE AND REEL INFORMATION

REEL DIMENSIONS

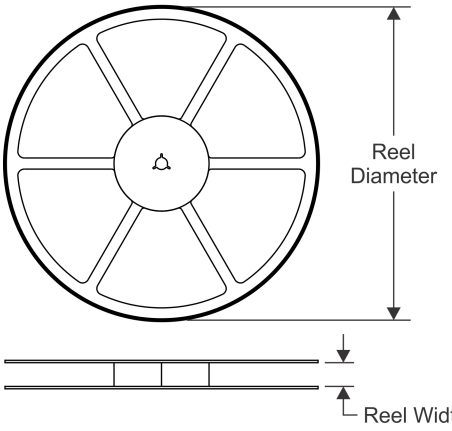

TAPE DIMENSIONS

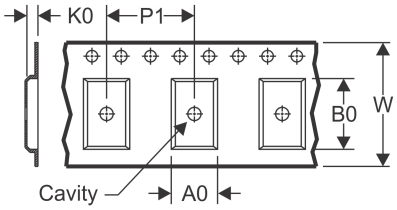

A0	Dimension designed to accommodate the component width
B0	Dimension designed to accommodate the component length
K0	Dimension designed to accommodate the component thickness
W	Overall width of the carrier tape
P1	Pitch between successive cavity centers

QUADRANT ASSIGNMENTS FOR PIN 1 ORIENTATION IN TAPE

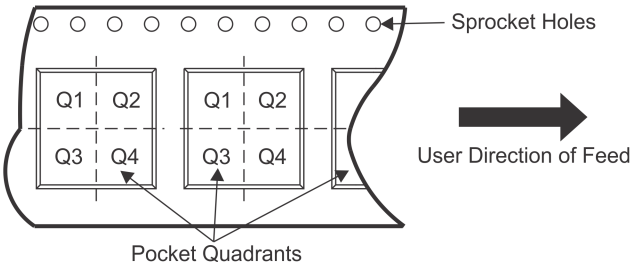

*All dimensions are nominal

Device	Package Type	Package Drawing	Pins	SPQ	Reel Diameter (mm)	Reel Width W1 (mm)	A0 (mm)	B0 (mm)	K0 (mm)	P1 (mm)	W (mm)	Pin1 Quadrant
CD4054BM96	SOIC	D	16	2500	330.0	16.4	6.5	10.3	2.1	8.0	16.0	Q1
CD4056BM96	SOIC	D	16	2500	330.0	16.4	6.5	10.3	2.1	8.0	16.0	Q1

TAPE AND REEL BOX DIMENSIONS

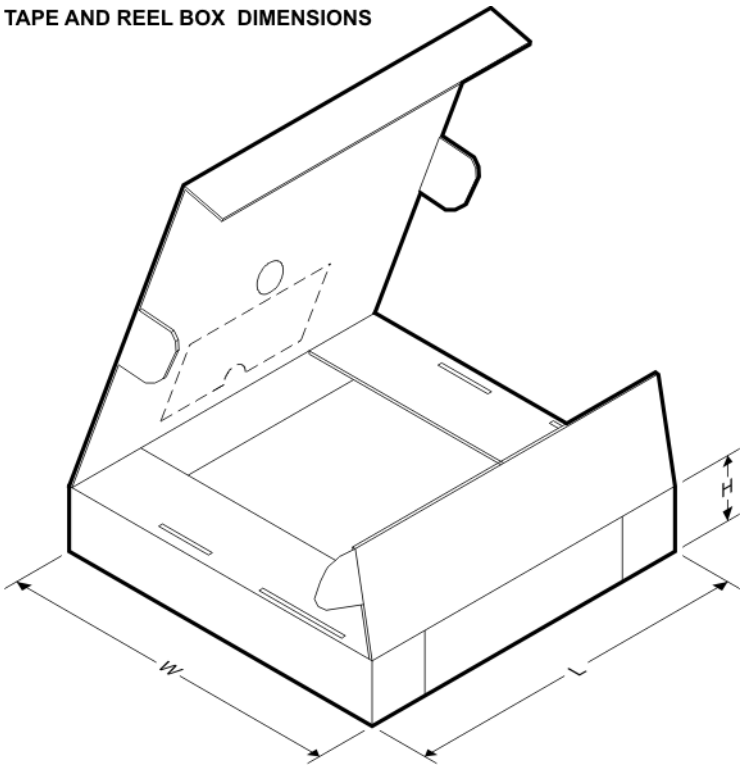

*All dimensions are nominal

Device	Package Type	Package Drawing	Pins	SPQ	Length (mm)	Width (mm)	Height (mm)
CD4054BM96	SOIC	D	16	2500	340.5	336.1	32.0
CD4056BM96	SOIC	D	16	2500	340.5	336.1	32.0

TUBE

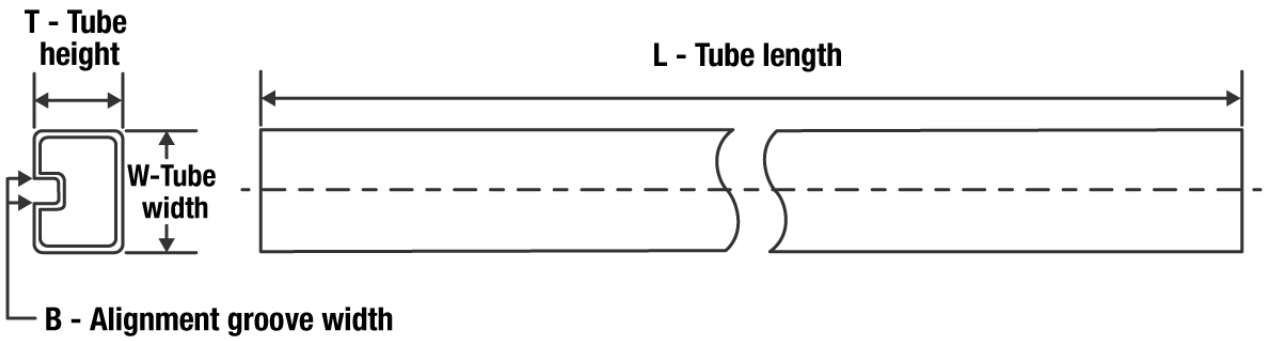

*All dimensions are nominal

Device	Package Name	Package Type	Pins	SPQ	L (mm)	W (mm)	T (µm)	B (mm)
CD4054BE	N	PDIP	16	25	506	13.97	11230	4.32
CD4054BE	N	PDIP	16	25	506	13.97	11230	4.32
CD4054BM	D	SOIC	16	40	507	8	3940	4.32
CD4054BPW	PW	TSSOP	16	90	530	10.2	3600	3.5
CD4055BE	N	PDIP	16	25	506	13.97	11230	4.32
CD4055BE	N	PDIP	16	25	506	13.97	11230	4.32
CD4055BM	D	SOIC	16	40	507	8	3940	4.32
CD4055BPW	PW	TSSOP	16	90	530	10.2	3600	3.5
CD4056BE	N	PDIP	16	25	506	13.97	11230	4.32
CD4056BE	N	PDIP	16	25	506	13.97	11230	4.32
CD4056BM	D	SOIC	16	40	507	8	3940	4.32
CD4056BME4	D	SOIC	16	40	507	8	3940	4.32
CD4056BMG4	D	SOIC	16	40	507	8	3940	4.32
CD4056BPW	PW	TSSOP	16	90	530	10.2	3600	3.5

J (R–GDIP–T**) CERAMIC DUAL IN–LINE PACKAGE

14 LEADS SHOWN

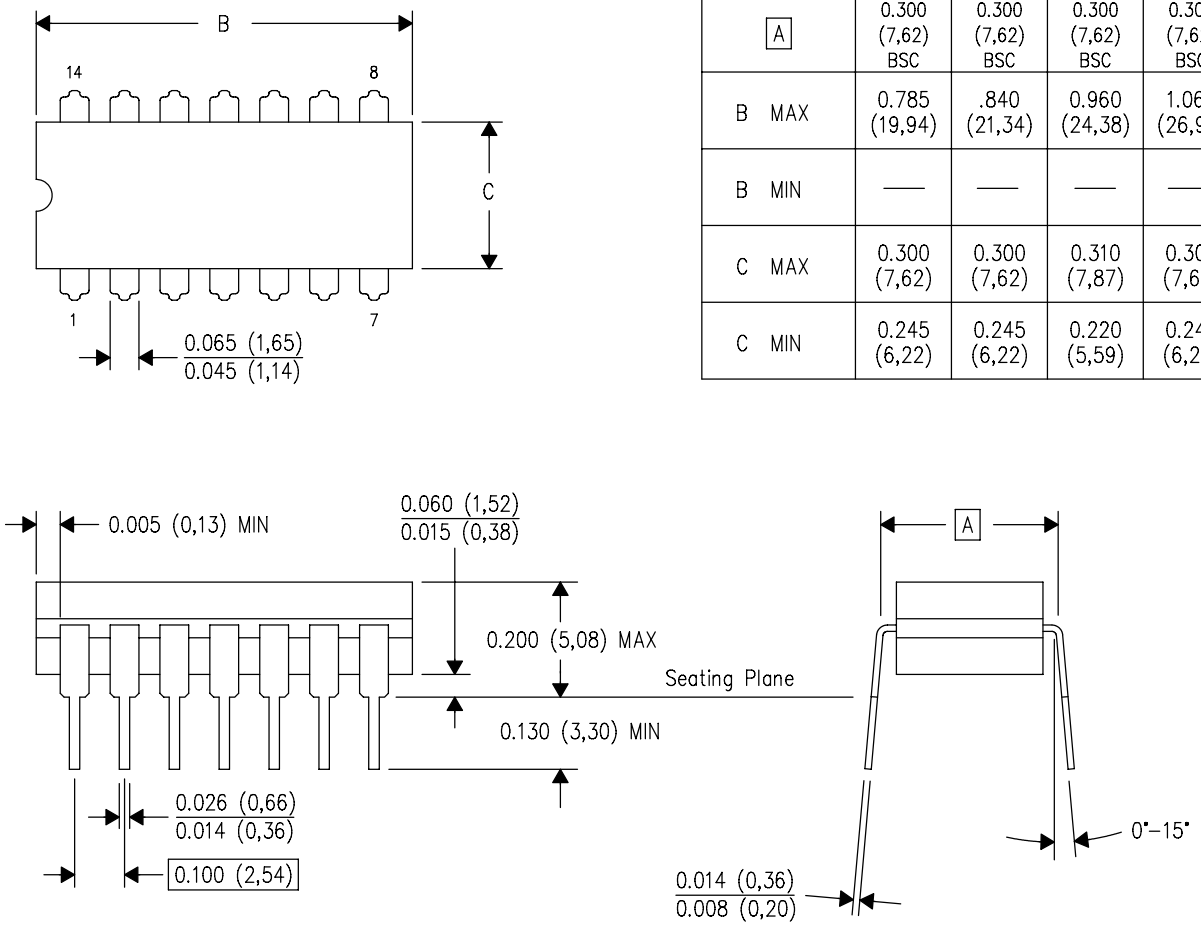

DIM \ PINS **	14	16	18	20
A	0.300 (7,62) BSC	0.300 (7,62) BSC	0.300 (7,62) BSC	0.300 (7,62) BSC
B MAX	0.785 (19,94)	.840 (21,34)	0.960 (24,38)	1.060 (26,92)
B MIN	—	—	—	—
C MAX	0.300 (7,62)	0.300 (7,62)	0.310 (7,87)	0.300 (7,62)
C MIN	0.245 (6,22)	0.245 (6,22)	0.220 (5,59)	0.245 (6,22)

4040083/F 03/03

NOTES:
- A. All linear dimensions are in inches (millimeters).
- B. This drawing is subject to change without notice.
- C. This package is hermetically sealed with a ceramic lid using glass frit.
- D. Index point is provided on cap for terminal identification only on press ceramic glass frit seal only.
- E. Falls within MIL STD 1835 GDIP1–T14, GDIP1–T16, GDIP1–T18 and GDIP1–T20.

N (R–PDIP–T**) PLASTIC DUAL–IN–LINE PACKAGE

16 PINS SHOWN

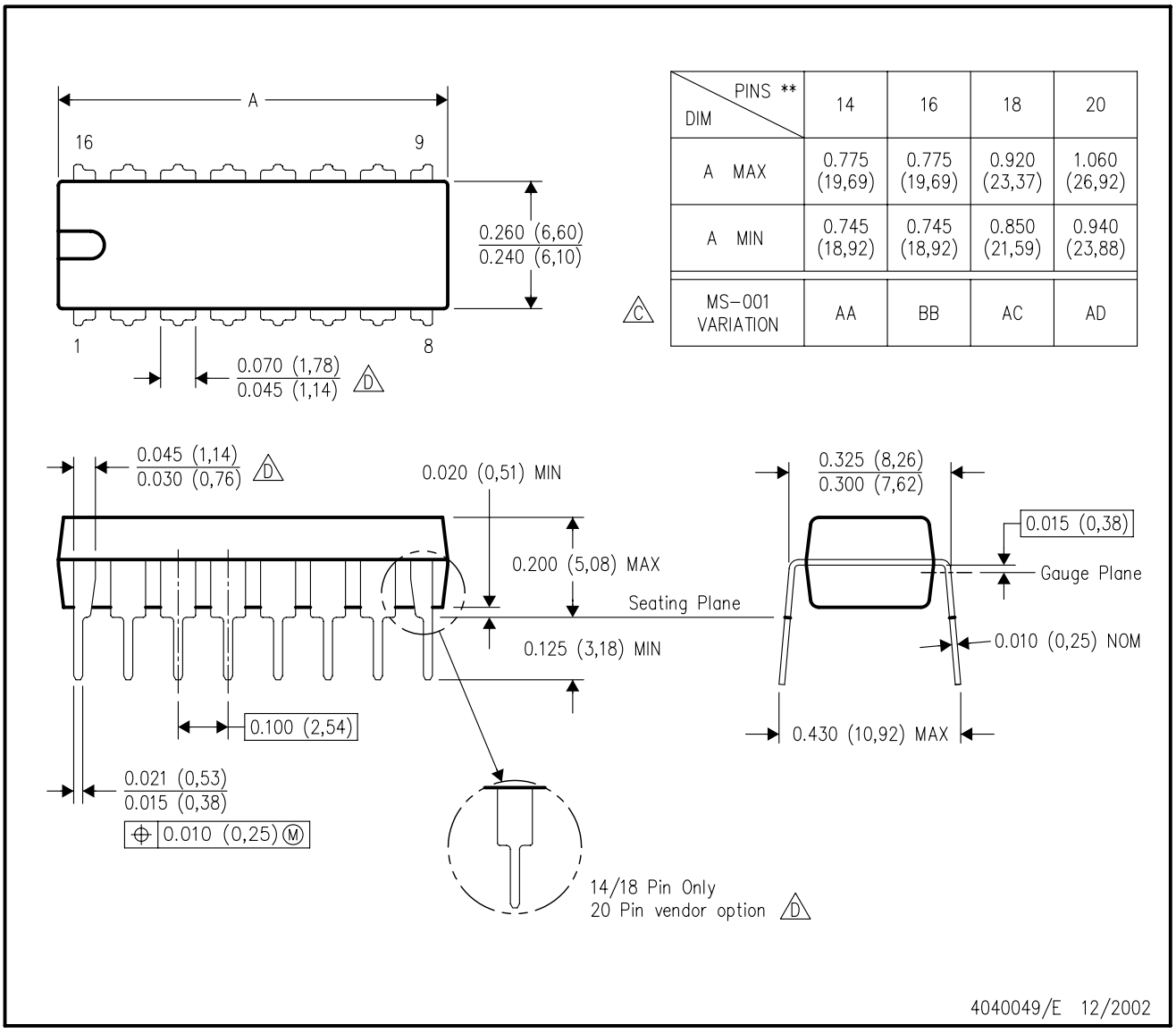

DIM \ PINS **	14	16	18	20
A MAX	0.775 (19,69)	0.775 (19,69)	0.920 (23,37)	1.060 (26,92)
A MIN	0.745 (18,92)	0.745 (18,92)	0.850 (21,59)	0.940 (23,88)
MS–001 VARIATION (C)	AA	BB	AC	AD

NOTES:
A. All linear dimensions are in inches (millimeters).
B. This drawing is subject to change without notice.
C. Falls within JEDEC MS–001, except 18 and 20 pin minimum body length (Dim A).
D. The 20 pin end lead shoulder width is a vendor option, either half or full width.

D (R–PDSO–G16) PLASTIC SMALL OUTLINE

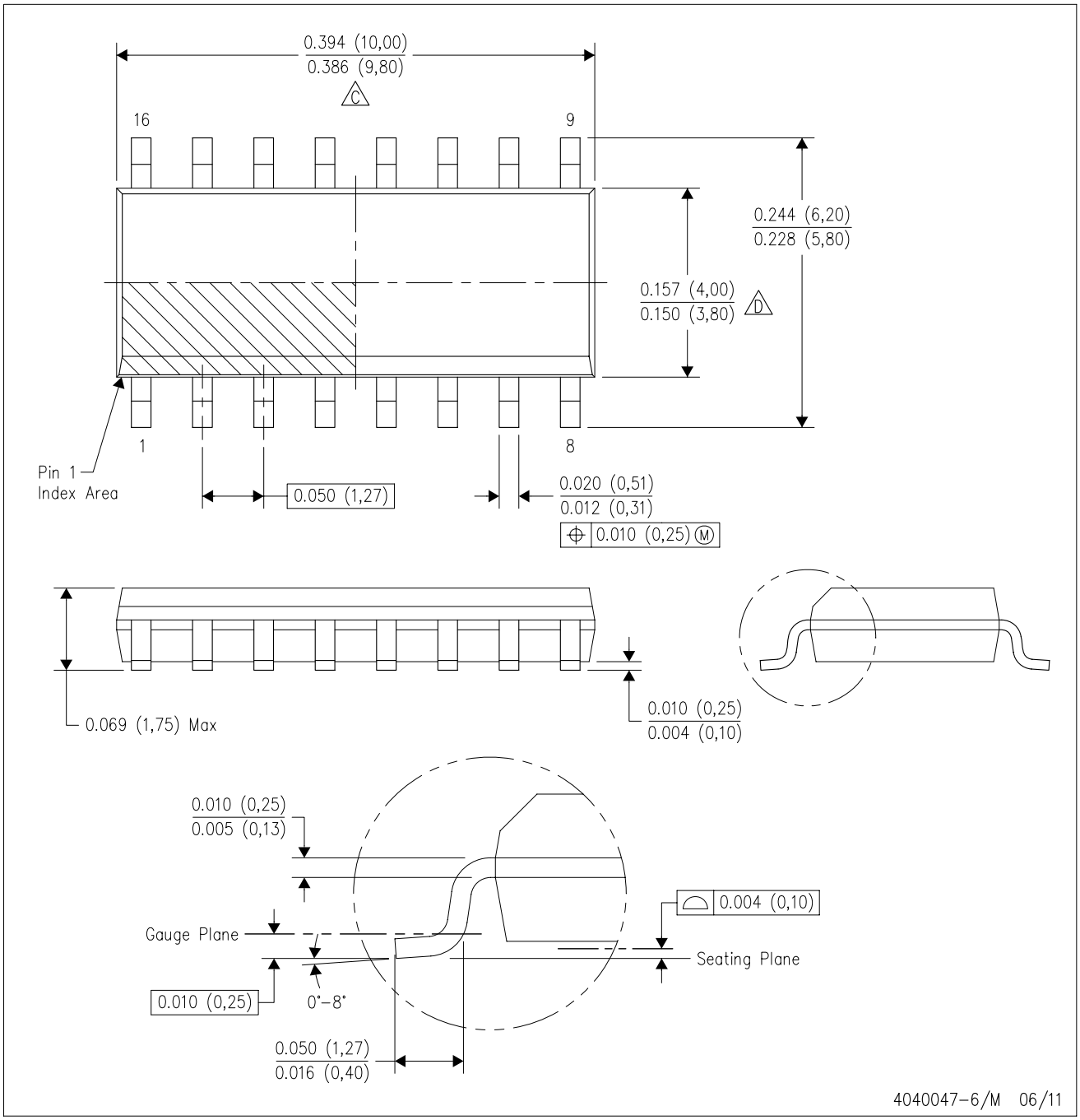

NOTES:
A. All linear dimensions are in inches (millimeters).
B. This drawing is subject to change without notice.
C. Body length does not include mold flash, protrusions, or gate burrs. Mold flash, protrusions, or gate burrs shall not exceed 0.006 (0,15) each side.
D. Body width does not include interlead flash. Interlead flash shall not exceed 0.017 (0,43) each side.
E. Reference JEDEC MS–012 variation AC.

D (R–PDSO–G16) PLASTIC SMALL OUTLINE

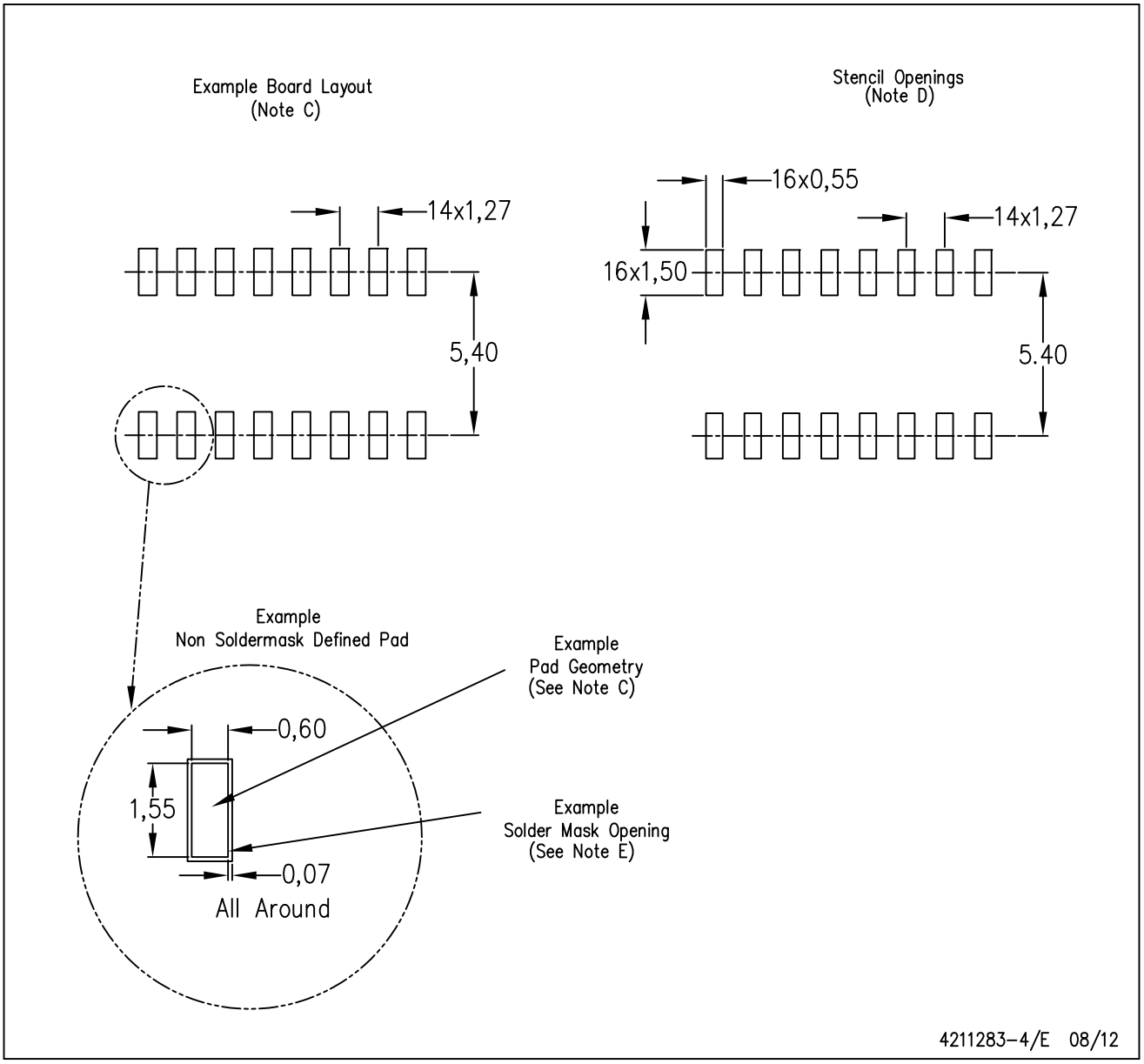

NOTES:
A. All linear dimensions are in millimeters.
B. This drawing is subject to change without notice.
C. Publication IPC–7351 is recommended for alternate designs.
D. Laser cutting apertures with trapezoidal walls and also rounding corners will offer better paste release. Customers should contact their board assembly site for stencil design recommendations. Refer to IPC–7525 for other stencil recommendations.
E. Customers should contact their board fabrication site for solder mask tolerances between and around signal pads.

PW0016A

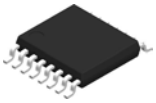

PACKAGE OUTLINE

TSSOP - 1.2 mm max height

SMALL OUTLINE PACKAGE

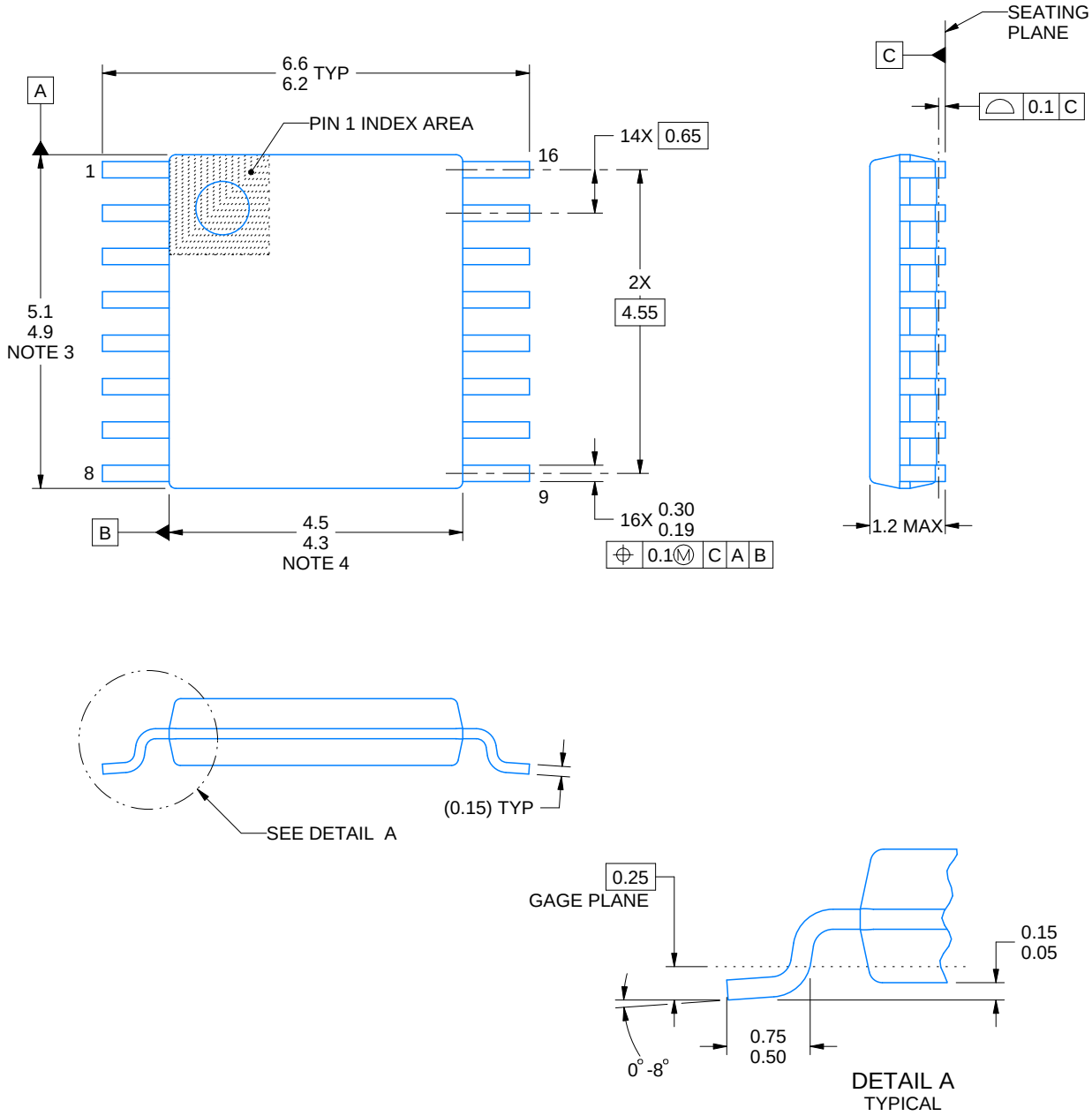

NOTES:

1. All linear dimensions are in millimeters. Any dimensions in parenthesis are for reference only. Dimensioning and tolerancing per ASME Y14.5M.
2. This drawing is subject to change without notice.
3. This dimension does not include mold flash, protrusions, or gate burrs. Mold flash, protrusions, or gate burrs shall not exceed 0.15 mm per side.
4. This dimension does not include interlead flash. Interlead flash shall not exceed 0.25 mm per side.
5. Reference JEDEC registration MO-153.

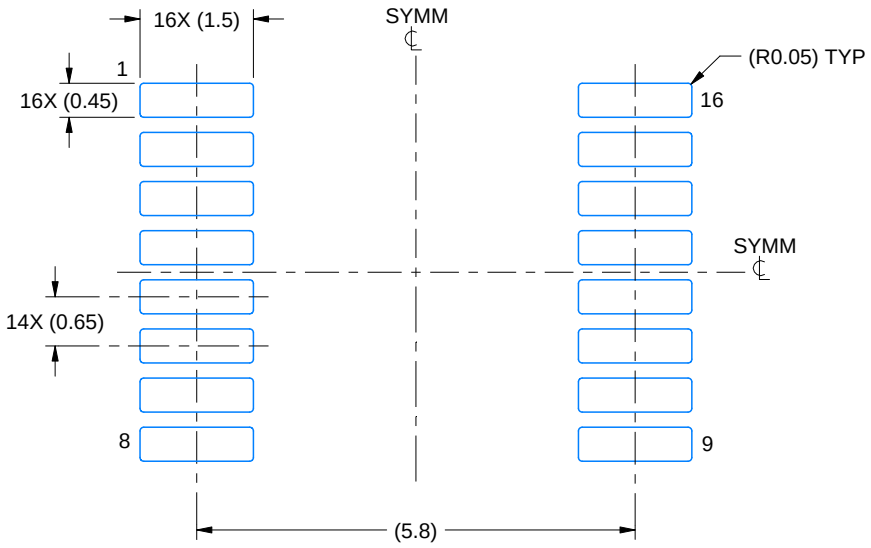

LAND PATTERN EXAMPLE
EXPOSED METAL SHOWN
SCALE: 10X

NON-SOLDER MASK DEFINED (PREFERRED)

SOLDER MASK DEFINED

SOLDER MASK DETAILS

4220204/A 02/2017

NOTES: (continued)

6. Publication IPC-7351 may have alternate designs.
7. Solder mask tolerances between and around signal pads can vary based on board fabrication site.

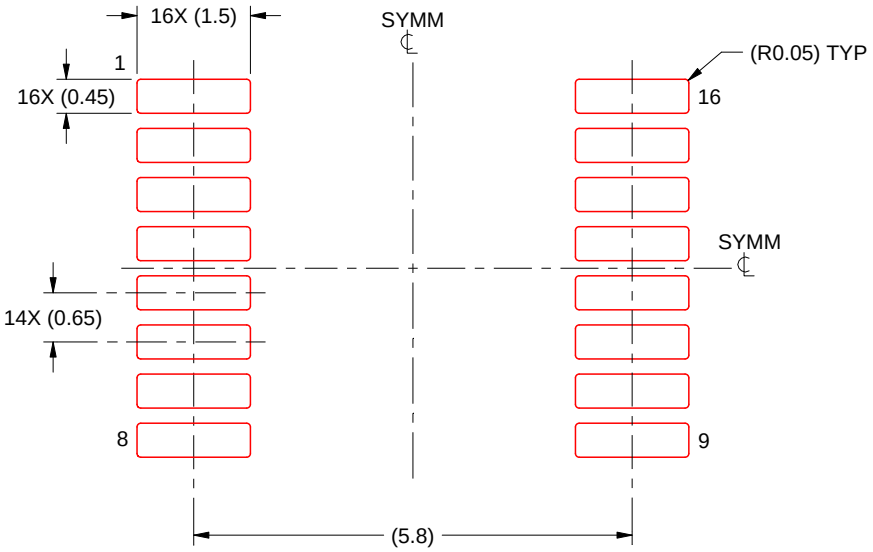

SOLDER PASTE EXAMPLE
BASED ON 0.125 mm THICK STENCIL
SCALE: 10X

4220204/A 02/2017

NOTES: (continued)

8. Laser cutting apertures with trapezoidal walls and rounded corners may offer better paste release. IPC-7525 may have alternate design recommendations.
9. Board assembly site may have different recommendations for stencil design.

IMPORTANT NOTICE AND DISCLAIMER

TI PROVIDES TECHNICAL AND RELIABILITY DATA (INCLUDING DATA SHEETS), DESIGN RESOURCES (INCLUDING REFERENCE DESIGNS), APPLICATION OR OTHER DESIGN ADVICE, WEB TOOLS, SAFETY INFORMATION, AND OTHER RESOURCES “AS IS” AND WITH ALL FAULTS, AND DISCLAIMS ALL WARRANTIES, EXPRESS AND IMPLIED, INCLUDING WITHOUT LIMITATION ANY IMPLIED WARRANTIES OF MERCHANTABILITY, FITNESS FOR A PARTICULAR PURPOSE OR NON-INFRINGEMENT OF THIRD PARTY INTELLECTUAL PROPERTY RIGHTS.

These resources are intended for skilled developers designing with TI products. You are solely responsible for (1) selecting the appropriate TI products for your application, (2) designing, validating and testing your application, and (3) ensuring your application meets applicable standards, and any other safety, security, regulatory or other requirements.

These resources are subject to change without notice. TI grants you permission to use these resources only for development of an application that uses the TI products described in the resource. Other reproduction and display of these resources is prohibited. No license is granted to any other TI intellectual property right or to any third party intellectual property right. TI disclaims responsibility for, and you will fully indemnify TI and its representatives against, any claims, damages, costs, losses, and liabilities arising out of your use of these resources.

TI’s products are provided subject to TI’s Terms of Sale or other applicable terms available either on ti.com or provided in conjunction with such TI products. TI’s provision of these resources does not expand or otherwise alter TI’s applicable warranties or warranty disclaimers for TI products.

TI objects to and rejects any additional or different terms you may have proposed.

Mailing Address: Texas Instruments, Post Office Box 655303, Dallas, Texas 75265
Copyright © 2022, Texas Instruments Incorporated