# CDx4HC164, CDx4HCT164 High-Speed CMOS Logic 8-Bit Serial-In/Parallel-Out Shift Register

## 1 Features

- Buffered inputs
- Asynchronous reset
- Typical $f_{MAX}$ = 60 MHz at $V_{CC}$ = 5 V, $C_L$ = 15 pF, $T_A$ = 25 °C
- Fanout (over temperature range)
  - Standard Outputs : 10 LSTTL loads
  - Bus driver outputs : 15 LSTTL loads
- Wide operating temp range : – 55 °C to 125 °C
- Balanced propagation delay and transition times
- Significant power reduction compared to LSTTL logic ICs
- HC types
  - 2 V to 6 V operation
  - High noise immunity : $N_{IL}$ = 30%, $N_{IH}$ = 30% of $V_{CC}$ at $V_{CC}$ = 5 V
- HCT types
  - 4.5 V to 5.5 V operation
  - Direct LSTTL input logic compatibility, $V_{IL}$ = 0.8 V (Max), $V_{IH}$ = 2 V (Min)
  - CMOS input compatibility, $I_I \leq 1$ µA at $V_{OL}$, $V_{OH}$

## 2 Description

The ’HC164 and ’HCT164 are 8-bit serial-in parallel-out shift registers with asynchronous reset. Data is shifted on the positive edge of Clock (CLK). A LOW on the Reset ($\overline{CLR}$) pin resets the shift register and all outputs go to the LOW state regardless of the input conditions. Two Serial Data inputs (A and B) are provided, either one can be used as a Data Enable control.

**Device Information**

| PART NUMBER | PACKAGE(1) | BODY SIZE (NOM) |
|---|---|---|
| CD74HC164M | SOIC (14) | 8.65 mm × 3.90 mm |
| CD74HCT164M | SOIC (14) | 8.65 mm × 3.90 mm |
| CD74HC164E | PDIP (14) | 19.31 mm × 6.35 mm |
| CD74HCT164E | PDIP (14) | 19.31 mm × 6.35 mm |
| CD54HC164F | CDIP (14) | 19.55 mm × 6.71 mm |

(1) For all available packages, see the orderable addendum at the end of the data sheet.

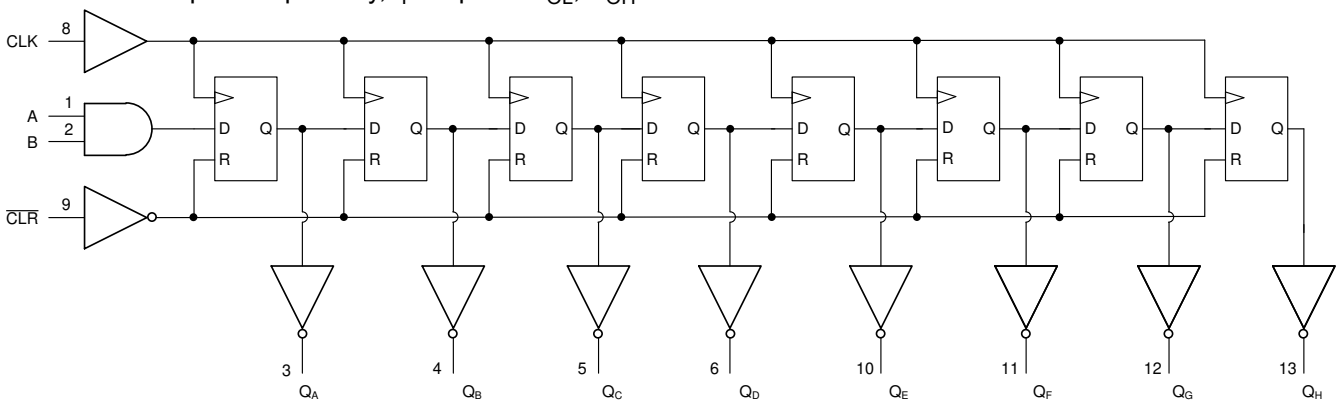


**Functional Block Diagram**

An IMPORTANT NOTICE at the end of this data sheet addresses availability, warranty, changes, use in safety-critical applications, intellectual property matters and other important disclaimers. PRODUCTION DATA.

## Table of Contents

**1 Features**....1
**2 Description**....1
**3 Revision History**....2
**4 Pin Configuration and Functions**....3
**5 Specifications**....4
5.1 Absolute Maximum Ratings....4
5.2 Recommended Operating Conditions....4
5.3 Thermal Information....4
5.4 Electrical Characteristics....5
5.5 Prerequisite for Switching Characteristics....6
5.6 Switching Characteristics....7
**6 Parameter Measurement Information**....8
**7 Detailed Description**....9
7.1 Overview....9
7.2 Functional Block Diagram....9
7.3 Device Functional Modes....9
**8 Power Supply Recommendations**....10
**9 Layout**....10
9.1 Layout Guidelines....10
**10 Device and Documentation Support**....11
10.1 Documentation Support....11
10.2 Receiving Notification of Documentation Updates....11
10.3 Support Resources....11
10.4 Trademarks....11
10.5 Electrostatic Discharge Caution....11
10.6 Glossary....11
**11 Mechanical, Packaging, and Orderable Information**....11

## 3 Revision History

NOTE: Page numbers for previous revisions may differ from page numbers in the current version.

| Changes from Revision C (August 2003) to Revision D (March 2022) | Page |
|---|---|
| • Updated the numbering, formatting, tables, figures, and cross-references throughout the doucment to reflect modern data sheet standards | 1 |
| • Updated naming conventions to reflect modern TI function. DS1 is now A; DS2 is now B; $Q_0$ is now $Q_A$; $Q_1$ is now $Q_B$; $Q_2$ is now $Q_C$; $Q_3$ is now $Q_D$; CP is now CLK; $\overline{MR}$ is now $\overline{CLR}$; $Q_4$ is now $Q_E$; $Q_5$ is now $Q_F$; $Q_6$ is now $Q_G$; $Q_7$ is now $Q_H$ | 3 |


Copyright © 2022 Texas Instruments Incorporated

## 4 Pin Configuration and Functions

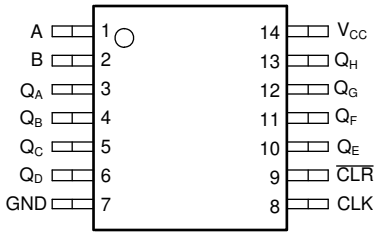


**J, D, and N Package**
**14-Pin CDIP, SOIC, and PDIP**
**Top View**

# 5 Specifications

## 5.1 Absolute Maximum Ratings

over operating free-air temperature range (unless otherwise noted)[1]

| | | | MIN | MAX | UNIT |
|---|---|---|---|---|---|
| $V_{CC}$ | Supply voltage range | | -0.5 | 7 | V |
| $I_{IK}$ | Input clamp current[2] | ($V_I$ < 0 or $V_I$ > $V_{CC}$) | | ±20 | mA |
| $I_{OK}$ | Output clamp current[2] | ($V_O$ < 0 or $V_O$ > $V_{CC}$) | | ±20 | mA |
| $I_O$ | Continuous output current | ($V_O$ = 0 to $V_{CC}$) | | ±25 | mA |
| | Continuous current through $V_{CC}$ or GND | | | ±50 | mA |
| $T_J$ | Junction temperature | | | 150 | °C |
| $T_{stg}$ | Storage temperature | | -65 | 150 | °C |

(1) Stresses beyond those listed under *absolute maximum ratings* may cause permanent damage to the device. These are stress ratings only and functional operation of the device at these or any other conditions beyond those indicated under *recommended operating conditions* is not implied. Exposure to absolute-maximum-rated conditions for extended periods may affect device reliability.
(2) The input and output voltage ratings may be exceeded if the input and output current ratings are observed.

## 5.2 Recommended Operating Conditions

| | | | MIN | MAX | UNIT |
|---|---|---|---|---|---|
| $V_{CC}$ | Supply voltage range | HC types | 2 | 6 | V |
| | | HCT types | 4.5 | 5.5 | |
| $V_I$, $V_O$ | Input or output voltage | | 0 | $V_{CC}$ | V |
| | Input rise and fall time | 2 V | | 1000 | ns |
| | | 4.5 V | | 500 | |
| | | 6 V | | 400 | |
| $T_A$ | Temperature range | | –55 | 125 | ℃ |

## 5.3 Thermal Information

| THERMAL METRIC | | D (SOIC) 14 PINS | N (PDIP) 14 PINS | UNIT |
|---|---|---|---|---|
| $R_{\theta JA}$ | Junction-to-ambient thermal resistance[1] | 86 | 80 | °C/W |

(1) For more information about traditional and new thermal metrics, see the *Semiconductor and IC package thermal metrics* application report.


Copyright © 2022 Texas Instruments Incorporated

## 5.4 Electrical Characteristics

| PARAMETER | | TEST CONDITIONS(1) | $V_{CC}$ (V) | 25°C | | | –40°C to 85°C | | –55°C to 125°C | | UNIT |
|---|---|---|---|---|---|---|---|---|---|---|---|
| | | | | MIN | TYP | MAX | MIN | MAX | MIN | MAX | |
| **HC TYPES** | | | | | | | | | | | |
| $V_{IH}$ | High level input voltage | | 2 | 1.5 | | | 1.5 | | 1.5 | | V |
| | | | 4.5 | 3.15 | | | 3.15 | | 3.15 | | |
| | | | 6 | 4.2 | | | 4.2 | | 4.2 | | |
| $V_{IL}$ | Low level input voltage | | 2 | | | 0.5 | | 0.5 | | 0.5 | V |
| | | | 4.5 | | | 1.35 | | 1.35 | | 1.35 | |
| | | | 6 | | | 1.8 | | 1.8 | | 1.8 | |
| $V_{OH}$ | High level output voltage | $I_{OH}$ = – 20 µA | 2 | 1.9 | | | 1.9 | | 1.9 | | V |
| | | $I_{OH}$ = – 20 µA | 4.5 | 4.4 | | | 4.4 | | 4.4 | | |
| | | $I_{OH}$ = – 20 µA | 6 | 5.9 | | | 5.9 | | 5.9 | | |
| | High level output voltage | $I_{OH}$ = – 4 mA | 4.5 | 3.98 | | | 3.84 | | 3.7 | | |
| | | $I_{OH}$ = – 5.2 mA | 6 | 5.48 | | | 5.34 | | 5.2 | | |
| $V_{OL}$ | Low level output voltage | $I_{OL}$ = 20 µA | 2 | | | 0.1 | | 0.1 | | 0.1 | V |
| | | $I_{OL}$ = 20 µA | 4.5 | | | 0.1 | | 0.1 | | 0.1 | |
| | | $I_{OL}$ = 20 µA | 6 | | | 0.1 | | 0.1 | | 0.1 | |
| | Low level output voltage | $I_{OL}$ = 4 mA | 4.5 | | | 0.26 | | 0.33 | | 0.4 | |
| | | $I_{OL}$ = 5.2 mA | 6 | | | 0.26 | | 0.33 | | 0.4 | V |
| $I_I$ | Input leakage current | | 6 | | | ±0.1 | | ±1 | | ±1 | µA |
| $I_{CC}$ | Supply current | $V_I$ = $V_{CC}$ or GND | 6 | | | 8 | | 80 | | 160 | µA |
| **HCT TYPES** | | | | | | | | | | | |
| $V_{IH}$ | High level input voltage | | 4.5 to 5.5 | 2 | | | 2 | | 2 | | V |
| $V_{IL}$ | Low level input voltage | | 4.5 to 5.5 | | | 0.8 | | 0.8 | | 0.8 | V |
| $V_{OH}$ | High level output voltage | $I_{OH}$ = – 20 µA | 4.5 | 4.4 | | | 4.4 | | 4.4 | | V |
| | High level output voltage | $I_{OH}$ = – 4 µA | 4.5 | 3.98 | | | 3.84 | | 3.7 | | |
| $V_{OL}$ | Low level output voltage | $I_{OL}$ = 20 µA | 4.5 | | | 0.1 | | 0.1 | | 0.1 | V |
| | Low level output voltage | $I_{OL}$ = 4 µA | 4.5 | | | 0.26 | | 0.33 | | 0.4 | |
| $I_I$ | Input leakage current | $V_I$ = $V_{CC}$ or GND | 5.5 | | | ±0.1 | | ±1 | | ±1 | µA |
| $I_{CC}$ | Supply current | $V_I$ = $V_{CC}$ or GND | 5.5 | | | 8 | | 80 | | 160 | µA |
| $\Delta I_{CC}$ (2) (3) | Additional supply current per input pin | Date Shift-In (1,2) | 4.5 to 5.5 | | 100 | 108 | | 135 | | 147 | µA |
| | | $\overline{CLR}$ | 4.5 to 5.5 | | 100 | 324 | | 405 | | 441 | µA |
| | | CLK | 4.5 to 5.5 | | 100 | 252 | | 315 | | 343 | µA |

(1) $V_I$ = $V_{IH}$ or $V_{IL}$, unless otherwise noted.
(2) This is the increase in supply current for each input that is at one of the specified TTL voltage levels, rather than 0 V or $V_{CC}$.
(3) Inputs held at $V_{CC}$ – 2.1.

## 5.5 Prerequisite for Switching Characteristics

| PARAMETER | | $V_{CC}$ (V) | 25°C | | – 40°C to 85°C | | – 55°C to 125°C | | UNIT |
|---|---|---|---|---|---|---|---|---|---|
| | | | MIN | MAX | MIN | MAX | MIN | MAX | |
| **HC TYPES** | | | | | | | | | |
| $f_{MAX}$ | Maximum clock frequency | 2 | 6 | | 5 | | 4 | | MHz |
| | | 4.5 | 30 | | 24 | | 20 | | MHz |
| | | 6 | 35 | | 28 | | 24 | | MHz |
| $t_W$ | $\overline{CLR}$ pulse width | 2 | 60 | | 75 | | 90 | | ns |
| | | 4.5 | 12 | | 15 | | 18 | | ns |
| | | 6 | 10 | | 13 | | 15 | | ns |
| $t_w$ | CLK pulse width | 2 | 80 | | 100 | | 120 | | ns |
| | | 4.5 | 16 | | 20 | | 24 | | ns |
| | | 6 | 14 | | 17 | | 20 | | ns |
| $t_{SU}$ | Set-up time | 2 | 60 | | 75 | | 90 | | ns |
| | | 4.5 | 12 | | 15 | | 18 | | ns |
| | | 6 | 10 | | 13 | | 15 | | ns |
| $t_H$ | Hold time | 2 | 4 | | 4 | | 4 | | ns |
| | | 4.5 | 4 | | 4 | | 4 | | ns |
| | | 6 | 4 | | 4 | | 4 | | ns |
| $t_{REM}$ | $\overline{CLR}$ to clock, Removal time | 2 | 80 | | 100 | | 120 | | ns |
| | | 4.5 | 16 | | 20 | | 24 | | ns |
| | | 6 | 14 | | 17 | | 20 | | ns |
| **HCT TYPES** | | | | | | | | | |
| $f_{MAX}$ | Maximum clock frequency | 4.5 | 27 | | 22 | | 18 | | MHz |
| $t_W$ | $\overline{CLR}$ pulse width | 6 | 18 | | 23 | | 27 | | ns |
| $t_W$ | CLK pulse width | 4.5 | 18 | | 23 | | 27 | | ns |
| $t_{SU}$ | Set-up time | 6 | 12 | | 15 | | 18 | | ns |
| $t_H$ | Hold time | 4.5 | 4 | | 4 | | 4 | | ns |
| $t_{REM}$ | $\overline{CLR}$ to clock, Removal time | 6 | 16 | | 20 | | 24 | | ns |


Copyright © 2022 Texas Instruments Incorporated

## 5.6 Switching Characteristics

Input $t_r$, $t_f$ = 6ns. $C_L$ = 50pF unless otherwise noted

| PARAMETER | | $V_{CC}$ (V) | 25°C | | – 40°C to 85°C | – 55°C to 125°C | UNIT |
|---|---|---|---|---|---|---|---|
| | | | TYP | MAX | MAX | MAX | |
| **HC TYPES** | | | | | | | |
| $t_{PLH}$, $t_{PHL}$ | CLK to Q | 2 | | 170 | 212 | 255 | ns |
| | | 4.5 | 14[3] | 34 | 43 | 51 | ns |
| | | 6 | | 29 | 36 | 43 | ns |
| $t_{PLH}$, $t_{PHL}$ | $\overline{CLR}$ to Q | 2 | | 140 | 175 | 210 | ns |
| | | 4.5 | 11[3] | 28 | 35 | 42 | ns |
| | | 6 | | 24 | 30 | 36 | ns |
| $t_{TLH}$, $t_{THL}$ | Output transition times | 2 | | 75 | | 110 | ns |
| | | 4.5 | | 15 | | 22 | ns |
| | | 6 | | 13 | | 19 | ns |
| $f_{MAX}$ | Maximum clock frequency | 5 | 60[3] | | | | ns |
| $C_{IN}$ | Input capacitance | | | 10 | 10 | 10 | pF |
| $C_{PD}$ | Power dissipation capacitance[1] [2] | 5 | 47 | | | | pF |
| **HCT TYPES** | | | | | | | |
| $t_{PLH}$, $t_{PHL}$ | CLK to Q | 4.5 | | 36 | 45 | 54 | ns |
| | | 5 | 15[3] | | | | |
| $t_{PLH}$, $t_{PHL}$ | $\overline{CLR}$ to Q | 4.5 | | 38 | 46 | 57 | ns |
| | | 5 | 16[3] | | | | |
| $t_{TLH}$, $t_{THL}$ | Output Transition time | 4.5 | | 15 | 19 | 22 | ns |
| $C_{IN}$ | Input Capacitance | | | | | | pF |
| $f_{MAX}$ | Maximum clock frequency | | 54[4] | | | | MHz |
| $C_{PD}$ | Power dissipation capacitance[1] [2] | 5 | 49 | 10 | 10 | 10 | pF |

(1) $C_{PD}$ is used to determine the dynamic power consumption, per device.
(2) $P_D = V_{CC}{}^2 f_i + \Sigma (C_L V_{CC}{}^2 + f_O)$ where $f_i$ = Input Frequency, $f_O$ = Output Frequency, $C_L$ = Output Load Capacitance, $V_{CC}$ = Supply Voltage.
(3) $C_L$ = 15pF. $V_{CC}$ = 5.
(4) $C_L$ = 15pF.

## 6 Parameter Measurement Information

Phase relationships between waveforms were chosen arbitrarily. All input pulses are supplied by generators having the following characteristics: PRR ≤ 1 MHz, $Z_O$ = 50 Ω, $t_t$ < 6 ns.

For clock inputs, $f_{max}$ is measured when the input duty cycle is 50%.

The outputs are measured one at a time with one input transition per measurement.

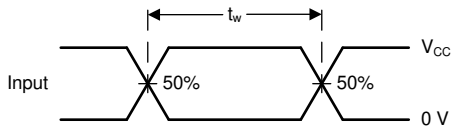


**Figure 6-1. Voltage Waveforms, Standard CMOS Inputs Pulse Duration**

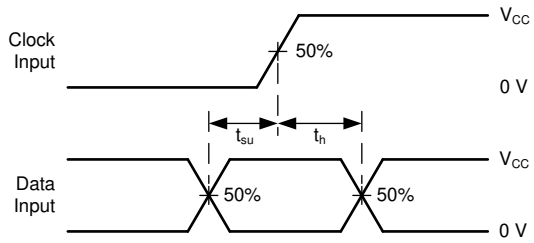


**Figure 6-2. Voltage Waveforms, Standard CMOS Inputs Setup and Hold Times**

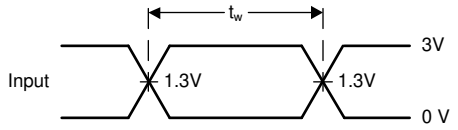


**Figure 6-3. Voltage Waveforms, TTL-Compatible CMOS Inputs Pulse Duration**

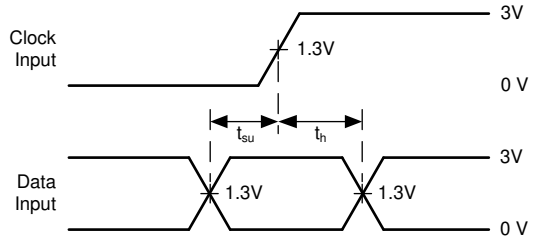


**Figure 6-4. Voltage Waveforms, TTL-Compatible CMOS Inputs Setup and Hold Times**


Copyright © 2022 Texas Instruments Incorporated

# 7 Detailed Description

## 7.1 Overview

The ’HC164 and ’HCT164 are 8-bit serial-in parallel-out shift registers with asynchronous reset. Data is shifted on the positive edge of Clock (CLK). A LOW on the Reset ($\overline{CLR}$) pin resets the shift register and all outputs go to the LOW state regardless of the input conditions. Two Serial Data inputs (A and B) are provided, either one can be used as a Data Enable control.

## 7.2 Functional Block Diagram

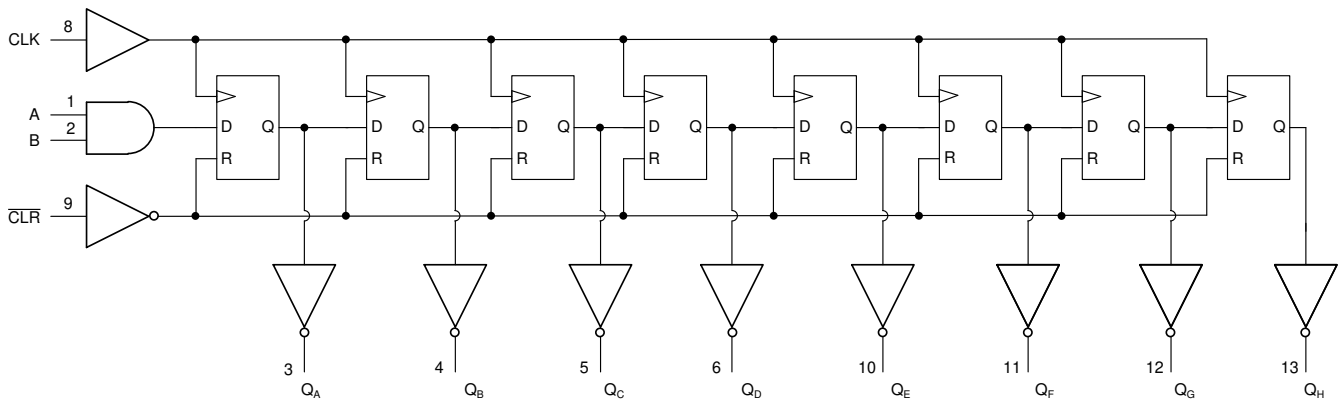


**Figure 7-1. Functional Block Diagram**

## 7.3 Device Functional Modes

**Truth Table**(1)

| OPERATING MODE | INPUTS | | | | OUTPUTS | |
|---|---|---|---|---|---|---|
| | $\overline{CLR}$ | CLK | A | B | $Q_A$ | $Q_B$- $Q_H$ |
| **RESET (CLEAR)** | **L** | **X** | **X** | **X** | **L** | **L - L** |
| Shift | H | ↑ | l | l | L | $q_A$ - $q_F$ |
| | H | ↑ | l | h | L | $q_A$ - $q_F$ |
| | H | ↑ | h | l | L | $q_A$ - $q_F$ |
| | H | ↑ | h | h | H | $q_A$ - $q_F$ |

(1) H = High voltage level.
h = High voltage level one set-up time prior to the low-to-high clock transition.
l = Low voltage level one set-up time prior to the low-to-high clock transition.
L = Low voltage level.
X = Don't care.
↑ = Transition from low to high level.
$q_n$ = Lower case letters indicate the state of the reference input clock transition.

# 8 Power Supply Recommendations

The power supply can be any voltage between the minimum and maximum supply voltage rating located in the *Recommended Operating Conditions*. Each $V_{CC}$ terminal should have a good bypass capacitor to prevent power disturbance. A 0.1-µF capacitor is recommended for this device. It is acceptable to parallel multiple bypass caps to reject different frequencies of noise. The 0.1-µF and 1-µF capacitors are commonly used in parallel. The bypass capacitor should be installed as close to the power terminal as possible for best results.

# 9 Layout

## 9.1 Layout Guidelines

When using multiple-input and multiple-channel logic devices inputs must not ever be left floating. In many cases, functions or parts of functions of digital logic devices are unused; for example, when only two inputs of a triple-input AND gate are used or only 3 of the 4 buffer gates are used. Such unused input pins must not be left unconnected because the undefined voltages at the outside connections result in undefined operational states. All unused inputs of digital logic devices must be connected to a logic high or logic low voltage, as defined by the input voltage specifications, to prevent them from floating. The logic level that must be applied to any particular unused input depends on the function of the device. Generally, the inputs are tied to GND or $V_{CC}$, whichever makes more sense for the logic function or is more convenient.


Copyright © 2022 Texas Instruments Incorporated

# 10 Device and Documentation Support

TI offers an extensive line of development tools. Tools and software to evaluate the performance of the device, generate code, and develop solutions are listed below.

## 10.1 Documentation Support

### 10.1.1 Related Documentation

## 10.2 Receiving Notification of Documentation Updates

To receive notification of documentation updates, navigate to the device product folder on ti.com. Click on *Subscribe to updates* to register and receive a weekly digest of any product information that has changed. For change details, review the revision history included in any revised document.

## 10.3 Support Resources

TI E2E™ support forums are an engineer's go-to source for fast, verified answers and design help — straight from the experts. Search existing answers or ask your own question to get the quick design help you need.

Linked content is provided "AS IS" by the respective contributors. They do not constitute TI specifications and do not necessarily reflect TI's views; see TI's Terms of Use.

## 10.4 Trademarks

TI E2E™ is a trademark of Texas Instruments.
All trademarks are the property of their respective owners.

## 10.5 Electrostatic Discharge Caution

This integrated circuit can be damaged by ESD. Texas Instruments recommends that all integrated circuits be handled with appropriate precautions. Failure to observe proper handling and installation procedures can cause damage.

ESD damage can range from subtle performance degradation to complete device failure. Precision integrated circuits may be more susceptible to damage because very small parametric changes could cause the device not to meet its published specifications.

## 10.6 Glossary

| | |
|---|---|
| TI Glossary | This glossary lists and explains terms, acronyms, and definitions. |

# 11 Mechanical, Packaging, and Orderable Information

The following pages include mechanical, packaging, and orderable information. This information is the most current data available for the designated devices. This data is subject to change without notice and revision of this document. For browser-based versions of this data sheet, refer to the left-hand navigation.

Copyright © 2022 Texas Instruments Incorporated

## PACKAGING INFORMATION

| Orderable Device | Status (1) | Package Type | Package Drawing | Pins | Package Qty | Eco Plan (2) | Lead finish/ Ball material (6) | MSL Peak Temp (3) | Op Temp (°C) | Device Marking (4/5) | Samples |
|---|---|---|---|---|---|---|---|---|---|---|---|
| 5962-8970401CA | ACTIVE | CDIP | J | 14 | 1 | Non-RoHS & Green | SNPB | N / A for Pkg Type | -55 to 125 | 5962-8970401CA CD54HCT164F3A | Samples |
| CD54HC164F | ACTIVE | CDIP | J | 14 | 1 | Non-RoHS & Green | SNPB | N / A for Pkg Type | -55 to 125 | CD54HC164F | Samples |
| CD54HC164F3A | ACTIVE | CDIP | J | 14 | 1 | Non-RoHS & Green | SNPB | N / A for Pkg Type | -55 to 125 | 8416201CA CD54HC164F3A | Samples |
| CD54HCT164F3A | ACTIVE | CDIP | J | 14 | 1 | Non-RoHS & Green | SNPB | N / A for Pkg Type | -55 to 125 | 5962-8970401CA CD54HCT164F3A | Samples |
| CD74HC164E | ACTIVE | PDIP | N | 14 | 25 | RoHS & Green | NIPDAU | N / A for Pkg Type | -55 to 125 | CD74HC164E | Samples |
| CD74HC164M | ACTIVE | SOIC | D | 14 | 50 | RoHS & Green | NIPDAU | Level-1-260C-UNLIM | -55 to 125 | HC164M | Samples |
| CD74HC164M96 | ACTIVE | SOIC | D | 14 | 2500 | RoHS & Green | NIPDAU | Level-1-260C-UNLIM | -55 to 125 | HC164M | Samples |
| CD74HC164M96G4 | ACTIVE | SOIC | D | 14 | 2500 | RoHS & Green | NIPDAU | Level-1-260C-UNLIM | -55 to 125 | HC164M | Samples |
| CD74HC164ME4 | ACTIVE | SOIC | D | 14 | 50 | RoHS & Green | NIPDAU | Level-1-260C-UNLIM | -55 to 125 | HC164M | Samples |
| CD74HC164MG4 | ACTIVE | SOIC | D | 14 | 50 | RoHS & Green | NIPDAU | Level-1-260C-UNLIM | -55 to 125 | HC164M | Samples |
| CD74HC164MT | ACTIVE | SOIC | D | 14 | 250 | RoHS & Green | NIPDAU | Level-1-260C-UNLIM | -55 to 125 | HC164M | Samples |
| CD74HCT164E | ACTIVE | PDIP | N | 14 | 25 | RoHS & Green | NIPDAU | N / A for Pkg Type | -55 to 125 | CD74HCT164E | Samples |
| CD74HCT164M | ACTIVE | SOIC | D | 14 | 50 | RoHS & Green | NIPDAU | Level-1-260C-UNLIM | -55 to 125 | HCT164M | Samples |
| CD74HCT164M96 | ACTIVE | SOIC | D | 14 | 2500 | RoHS & Green | NIPDAU | Level-1-260C-UNLIM | -55 to 125 | HCT164M | Samples |
| CD74HCT164M96E4 | ACTIVE | SOIC | D | 14 | 2500 | RoHS & Green | NIPDAU | Level-1-260C-UNLIM | -55 to 125 | HCT164M | Samples |
| CD74HCT164MT | ACTIVE | SOIC | D | 14 | 250 | RoHS & Green | NIPDAU | Level-1-260C-UNLIM | -55 to 125 | HCT164M | Samples |

(1) The marketing status values are defined as follows:
**ACTIVE:** Product device recommended for new designs.
**LIFEBUY:** TI has announced that the device will be discontinued, and a lifetime-buy period is in effect.
**NRND:** Not recommended for new designs. Device is in production to support existing customers, but TI does not recommend using this part in a new design.
**PREVIEW:** Device has been announced but is not in production. Samples may or may not be available.
**OBSOLETE:** TI has discontinued the production of the device.

(2) **RoHS:** TI defines "RoHS" to mean semiconductor products that are compliant with the current EU RoHS requirements for all 10 RoHS substances, including the requirement that RoHS substance do not exceed 0.1% by weight in homogeneous materials. Where designed to be soldered at high temperatures, "RoHS" products are suitable for use in specified lead-free processes. TI may reference these types of products as "Pb-Free".
**RoHS Exempt:** TI defines "RoHS Exempt" to mean products that contain lead but are compliant with EU RoHS pursuant to a specific EU RoHS exemption.
**Green:** TI defines "Green" to mean the content of Chlorine (Cl) and Bromine (Br) based flame retardants meet JS709B low halogen requirements of <=1000ppm threshold. Antimony trioxide based flame retardants must also meet the <=1000ppm threshold requirement.

(3) MSL, Peak Temp. - The Moisture Sensitivity Level rating according to the JEDEC industry standard classifications, and peak solder temperature.

(4) There may be additional marking, which relates to the logo, the lot trace code information, or the environmental category on the device.

(5) Multiple Device Markings will be inside parentheses. Only one Device Marking contained in parentheses and separated by a "~" will appear on a device. If a line is indented then it is a continuation of the previous line and the two combined represent the entire Device Marking for that device.

(6) Lead finish/Ball material - Orderable Devices may have multiple material finish options. Finish options are separated by a vertical ruled line. Lead finish/Ball material values may wrap to two lines if the finish value exceeds the maximum column width.

**Important Information and Disclaimer:**The information provided on this page represents TI's knowledge and belief as of the date that it is provided. TI bases its knowledge and belief on information provided by third parties, and makes no representation or warranty as to the accuracy of such information. Efforts are underway to better integrate information from third parties. TI has taken and continues to take reasonable steps to provide representative and accurate information but may not have conducted destructive testing or chemical analysis on incoming materials and chemicals. TI and TI suppliers consider certain information to be proprietary, and thus CAS numbers and other limited information may not be available for release.

In no event shall TI's liability arising out of such information exceed the total purchase price of the TI part(s) at issue in this document sold by TI to Customer on an annual basis.

**OTHER QUALIFIED VERSIONS OF CD54HC164, CD54HCT164, CD74HC164, CD74HCT164 :**

- Catalog : CD74HC164, CD74HCT164
- Military : CD54HC164, CD54HCT164

NOTE: Qualified Version Definitions:

- Catalog - TI's standard catalog product
- Military - QML certified for Military and Defense Applications

## TAPE AND REEL INFORMATION

**REEL DIMENSIONS**

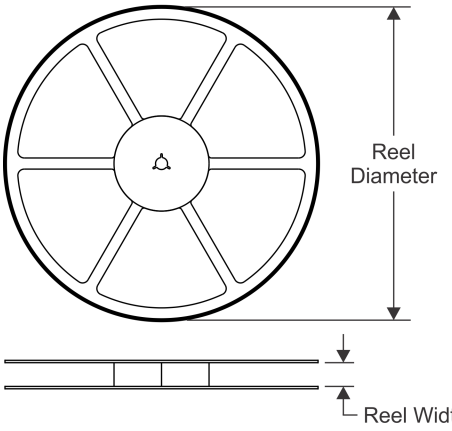


**TAPE DIMENSIONS**

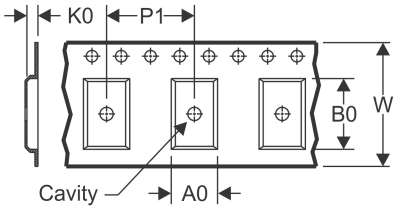


| | |
|---|---|
| A0 | Dimension designed to accommodate the component width |
| B0 | Dimension designed to accommodate the component length |
| K0 | Dimension designed to accommodate the component thickness |
| W | Overall width of the carrier tape |
| P1 | Pitch between successive cavity centers |

**QUADRANT ASSIGNMENTS FOR PIN 1 ORIENTATION IN TAPE**

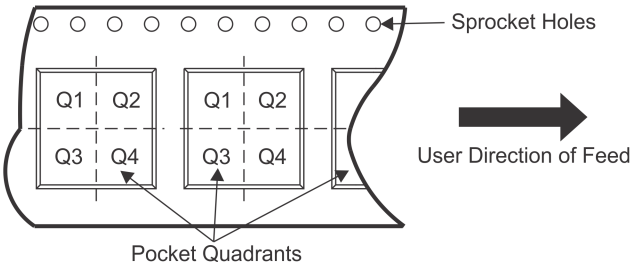


*All dimensions are nominal

| Device | Package Type | Package Drawing | Pins | SPQ | Reel Diameter (mm) | Reel Width W1 (mm) | A0 (mm) | B0 (mm) | K0 (mm) | P1 (mm) | W (mm) | Pin1 Quadrant |
|---|---|---|---|---|---|---|---|---|---|---|---|---|
| CD74HC164M96 | SOIC | D | 14 | 2500 | 330.0 | 16.4 | 6.5 | 9.0 | 2.1 | 8.0 | 16.0 | Q1 |
| CD74HC164MT | SOIC | D | 14 | 250 | 330.0 | 16.4 | 6.5 | 9.0 | 2.1 | 8.0 | 16.0 | Q1 |
| CD74HCT164M96 | SOIC | D | 14 | 2500 | 330.0 | 16.4 | 6.5 | 9.0 | 2.1 | 8.0 | 16.0 | Q1 |
| CD74HCT164MT | SOIC | D | 14 | 250 | 330.0 | 16.4 | 6.5 | 9.0 | 2.1 | 8.0 | 16.0 | Q1 |

TAPE AND REEL BOX DIMENSIONS

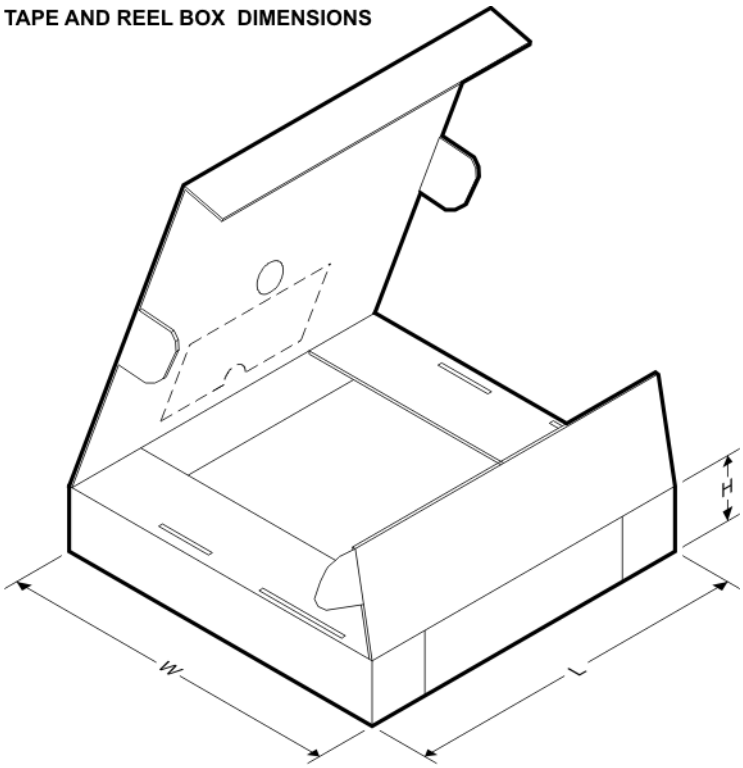


*All dimensions are nominal

| Device | Package Type | Package Drawing | Pins | SPQ | Length (mm) | Width (mm) | Height (mm) |
|---|---|---|---|---|---|---|---|
| CD74HC164M96 | SOIC | D | 14 | 2500 | 853.0 | 449.0 | 35.0 |
| CD74HC164MT | SOIC | D | 14 | 250 | 210.0 | 185.0 | 35.0 |
| CD74HCT164M96 | SOIC | D | 14 | 2500 | 853.0 | 449.0 | 35.0 |
| CD74HCT164MT | SOIC | D | 14 | 250 | 210.0 | 185.0 | 35.0 |

## TUBE

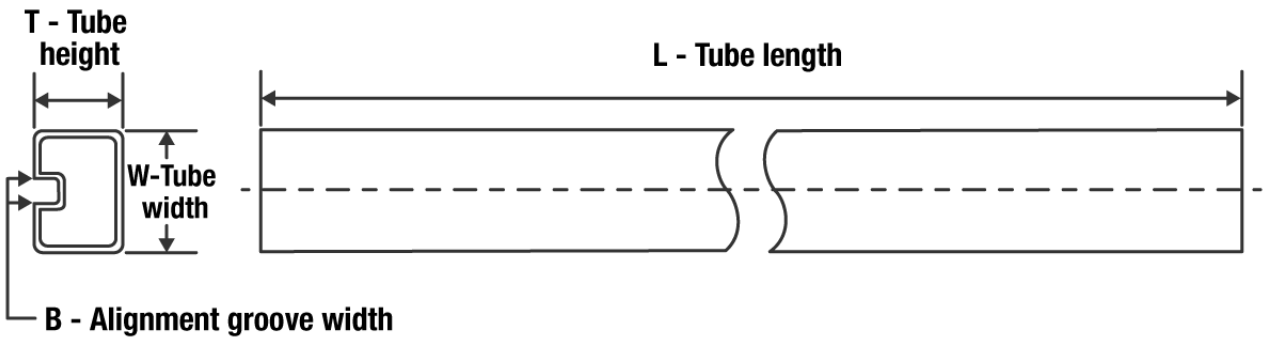


*All dimensions are nominal

| Device | Package Name | Package Type | Pins | SPQ | L (mm) | W (mm) | T (µm) | B (mm) |
|---|---|---|---|---|---|---|---|---|
| CD74HC164E | N | PDIP | 14 | 25 | 506 | 13.97 | 11230 | 4.32 |
| CD74HC164E | N | PDIP | 14 | 25 | 506 | 13.97 | 11230 | 4.32 |
| CD74HC164M | D | SOIC | 14 | 50 | 506.6 | 8 | 3940 | 4.32 |
| CD74HC164ME4 | D | SOIC | 14 | 50 | 506.6 | 8 | 3940 | 4.32 |
| CD74HC164MG4 | D | SOIC | 14 | 50 | 506.6 | 8 | 3940 | 4.32 |
| CD74HCT164E | N | PDIP | 14 | 25 | 506 | 13.97 | 11230 | 4.32 |
| CD74HCT164E | N | PDIP | 14 | 25 | 506 | 13.97 | 11230 | 4.32 |
| CD74HCT164M | D | SOIC | 14 | 50 | 506.6 | 8 | 3940 | 4.32 |

# J 14 CDIP - 5.08 mm max height

CERAMIC DUAL IN LINE PACKAGE

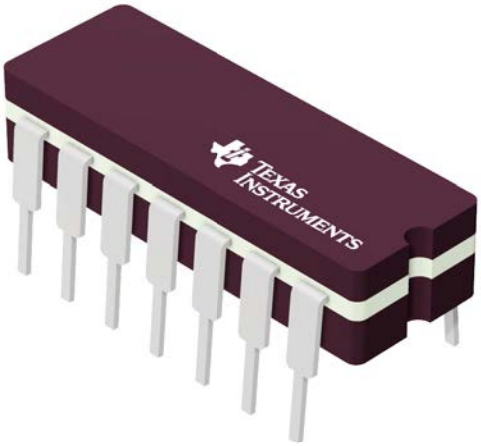


Images above are just a representation of the package family, actual package may vary.
Refer to the product data sheet for package details.

4040083-5/G

# PACKAGE OUTLINE

## J0014A

## CDIP - 5.08 mm max height

CERAMIC DUAL IN LINE PACKAGE

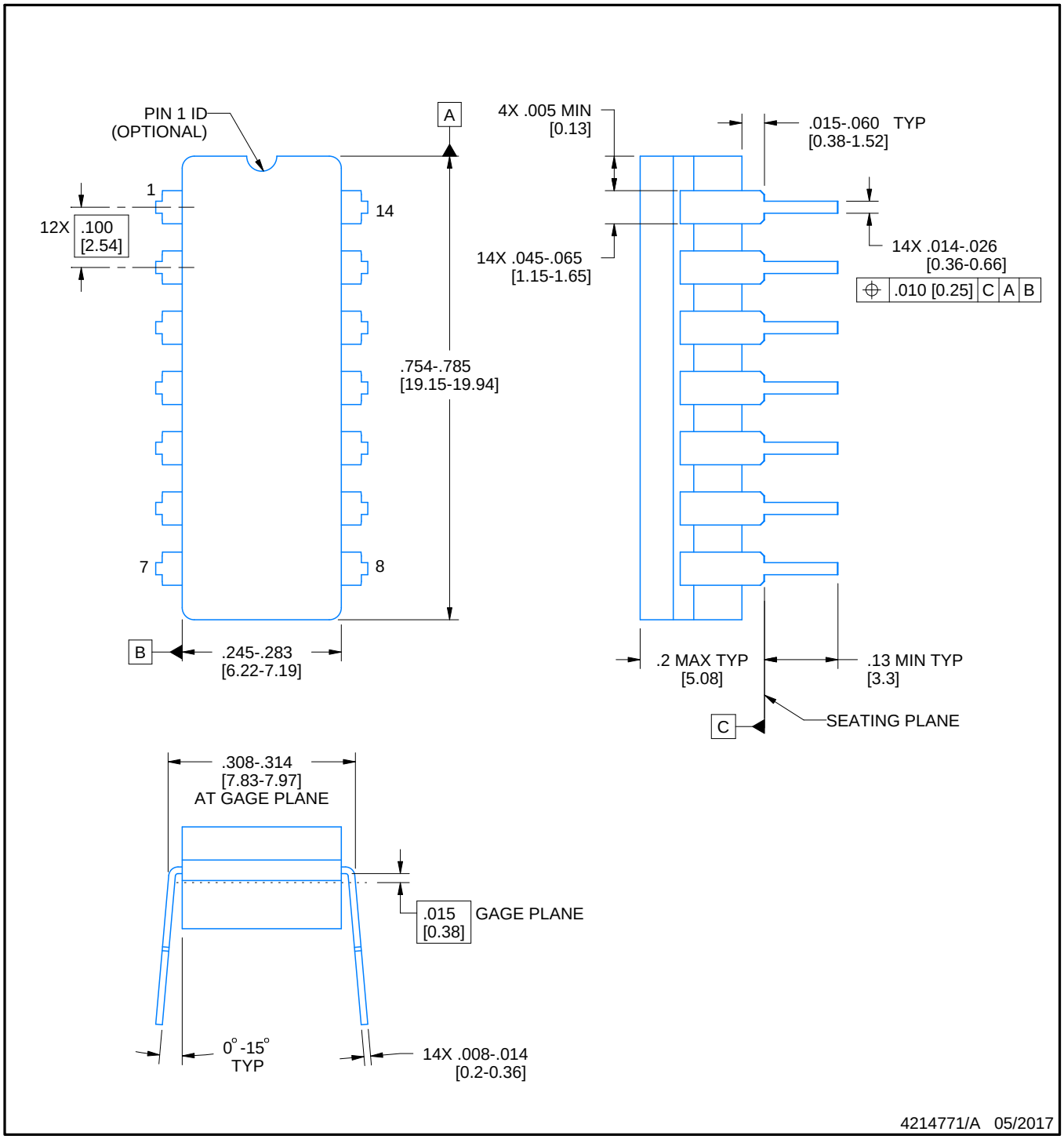


NOTES:

1. All controlling linear dimensions are in inches. Dimensions in brackets are in millimeters. Any dimension in brackets or parenthesis are for reference only. Dimensioning and tolerancing per ASME Y14.5M.
2. This drawing is subject to change without notice.
3. This package is hermitically sealed with a ceramic lid using glass frit.
4. Index point is provided on cap for terminal identification only and on press ceramic glass frit seal only.
5. Falls within MIL-STD-1835 and GDIP1-T14.

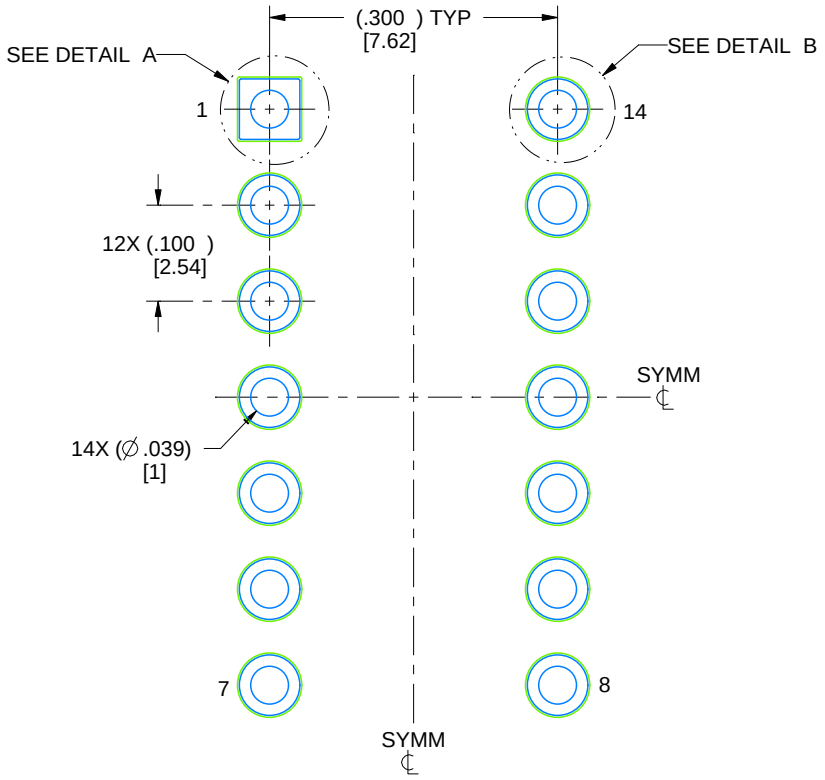


LAND PATTERN EXAMPLE
NON-SOLDER MASK DEFINED
SCALE: 5X

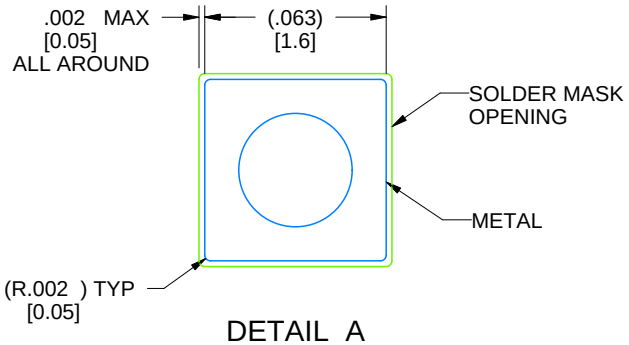


DETAIL A
SCALE: 15X

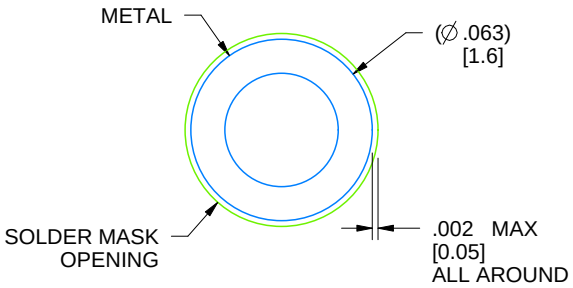


DETAIL B
13X, SCALE: 15X

4214771/A 05/2017

D (R–PDSO–G14) PLASTIC SMALL OUTLINE

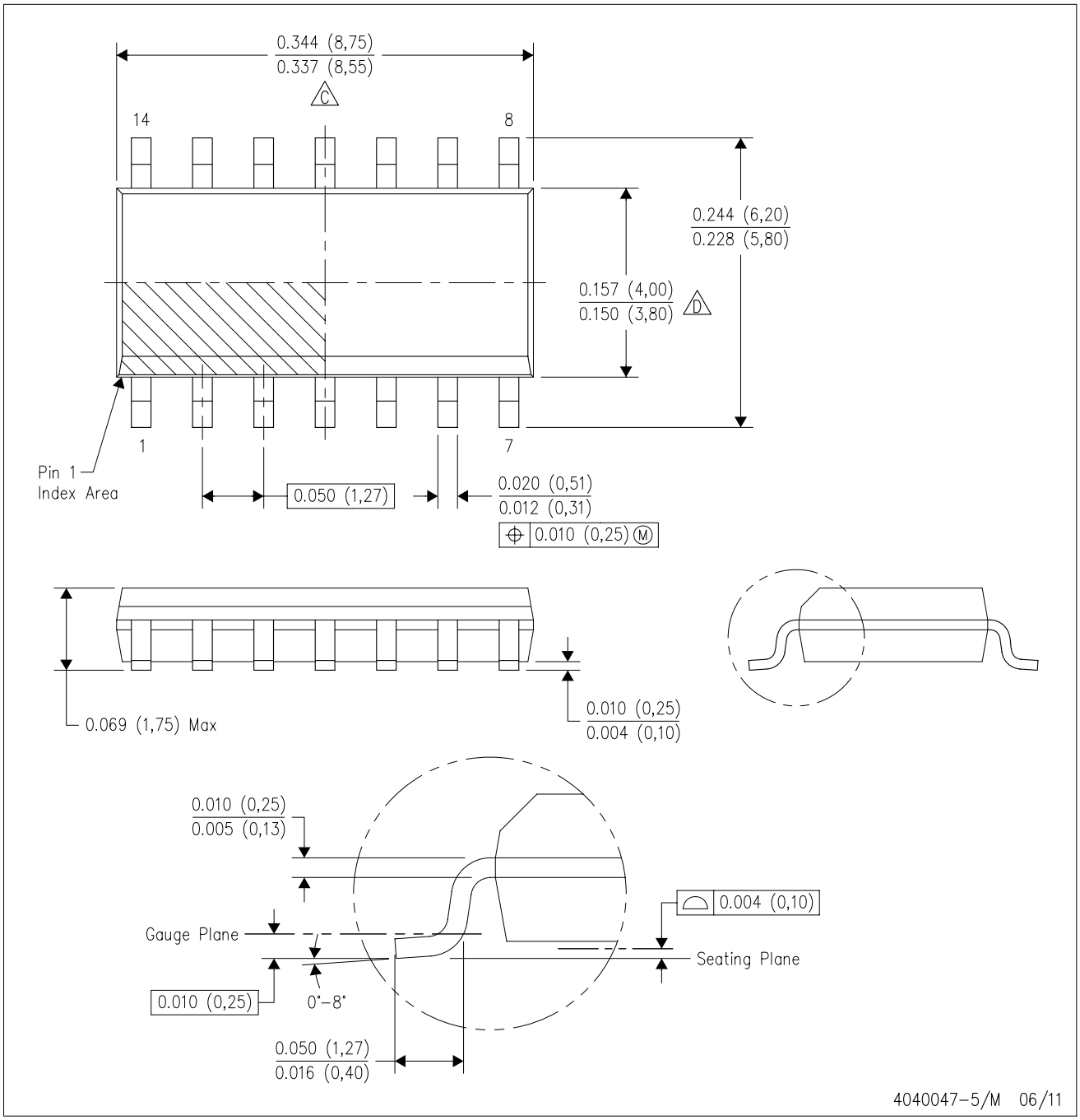


NOTES:
A. All linear dimensions are in inches (millimeters).
B. This drawing is subject to change without notice.
C. Body length does not include mold flash, protrusions, or gate burrs. Mold flash, protrusions, or gate burrs shall not exceed 0.006 (0,15) each side.
D. Body width does not include interlead flash. Interlead flash shall not exceed 0.017 (0,43) each side.
E. Reference JEDEC MS–012 variation AB.

D (R–PDSO–G14) PLASTIC SMALL OUTLINE

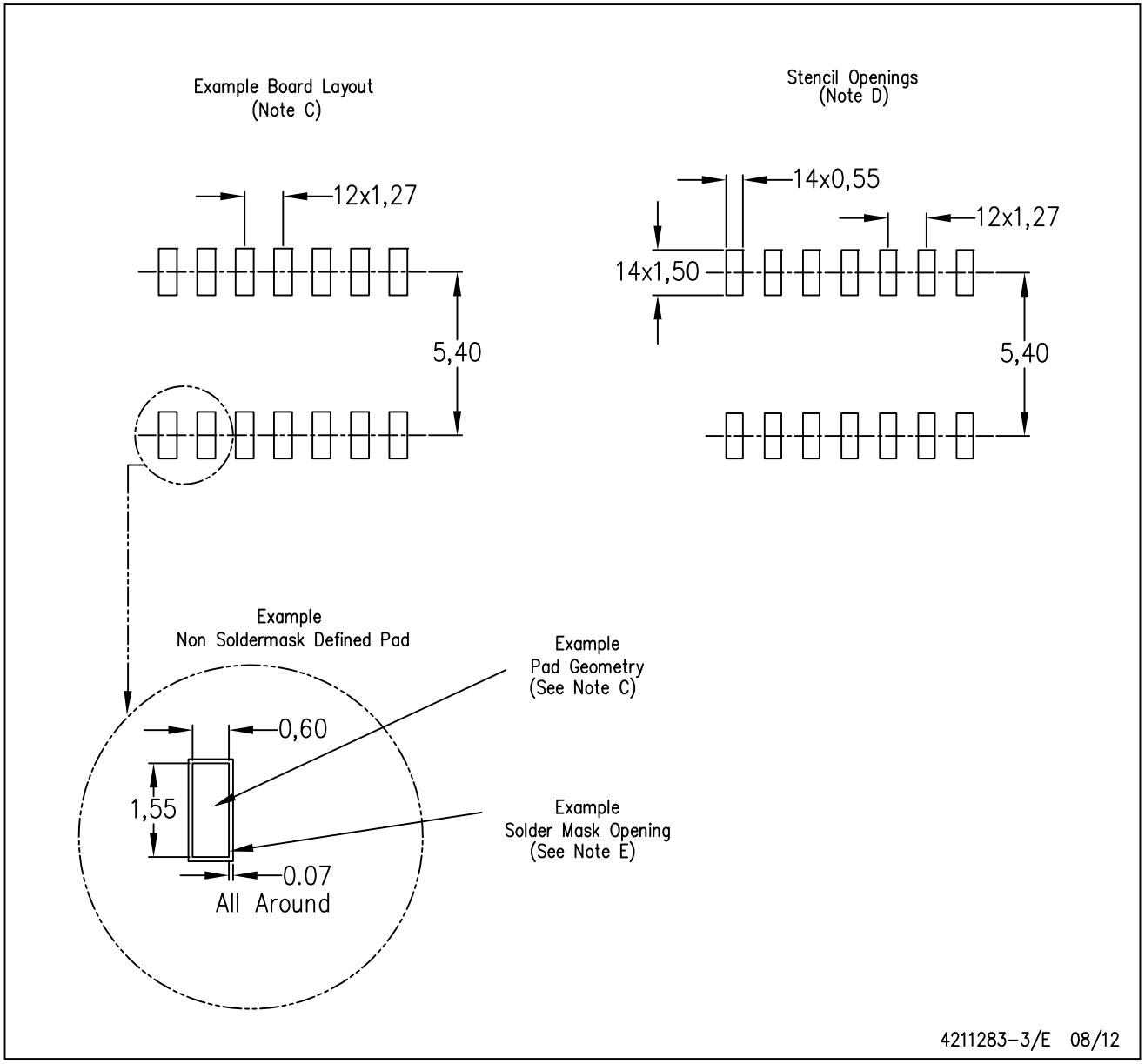


NOTES:
A. All linear dimensions are in millimeters.
B. This drawing is subject to change without notice.
C. Publication IPC–7351 is recommended for alternate designs.
D. Laser cutting apertures with trapezoidal walls and also rounding corners will offer better paste release. Customers should contact their board assembly site for stencil design recommendations. Refer to IPC–7525 for other stencil recommendations.
E. Customers should contact their board fabrication site for solder mask tolerances between and around signal pads.

## N (R–PDIP–T**) PLASTIC DUAL–IN–LINE PACKAGE

16 PINS SHOWN

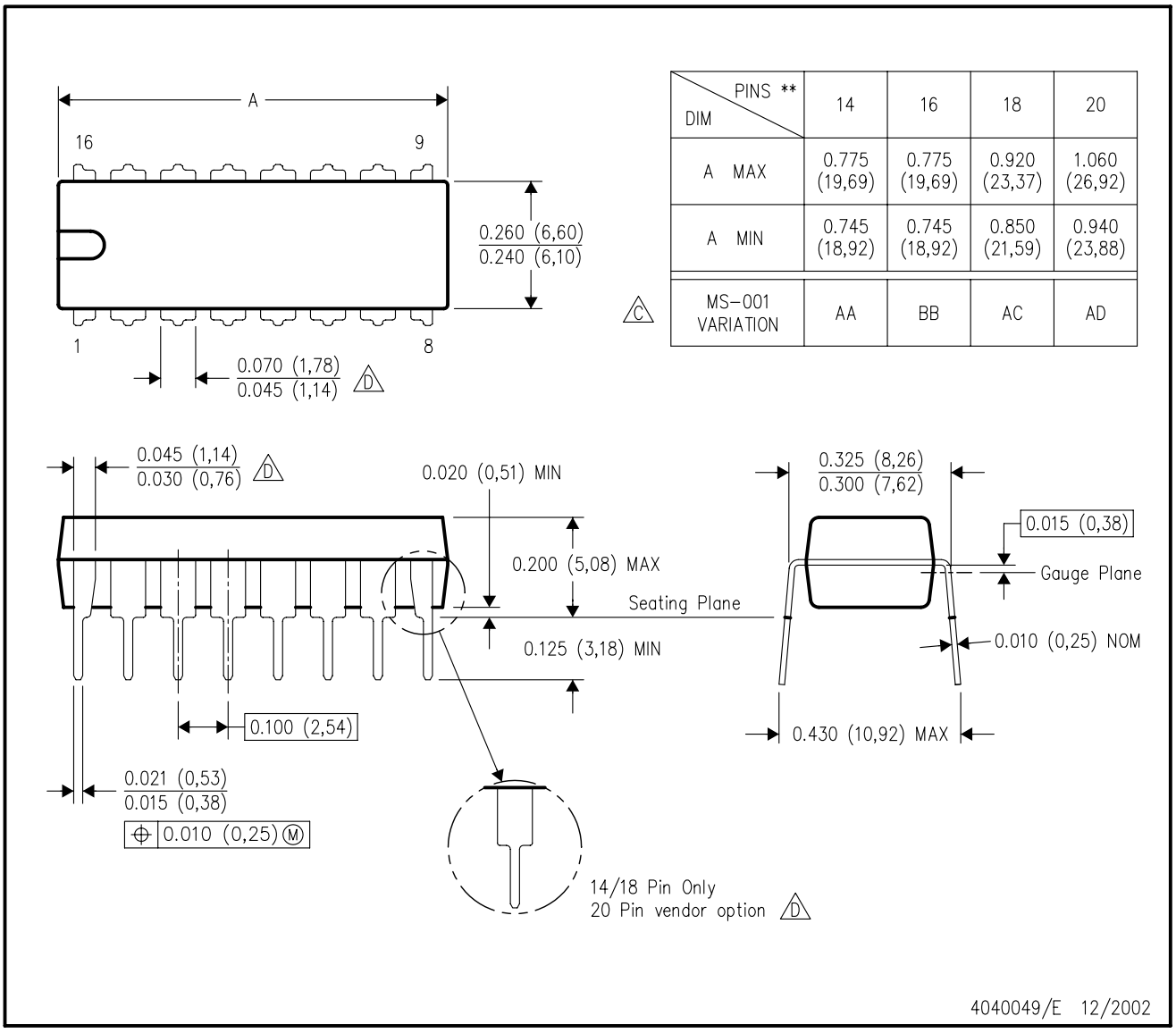


| DIM \ PINS ** | 14 | 16 | 18 | 20 |
|---|---|---|---|---|
| A MAX | 0.775 (19,69) | 0.775 (19,69) | 0.920 (23,37) | 1.060 (26,92) |
| A MIN | 0.745 (18,92) | 0.745 (18,92) | 0.850 (21,59) | 0.940 (23,88) |
| MS–001 VARIATION (C) | AA | BB | AC | AD |

NOTES:
A. All linear dimensions are in inches (millimeters).
B. This drawing is subject to change without notice.
C. Falls within JEDEC MS–001, except 18 and 20 pin minimum body length (Dim A).
D. The 20 pin end lead shoulder width is a vendor option, either half or full width.

# IMPORTANT NOTICE AND DISCLAIMER

TI PROVIDES TECHNICAL AND RELIABILITY DATA (INCLUDING DATA SHEETS), DESIGN RESOURCES (INCLUDING REFERENCE DESIGNS), APPLICATION OR OTHER DESIGN ADVICE, WEB TOOLS, SAFETY INFORMATION, AND OTHER RESOURCES “AS IS” AND WITH ALL FAULTS, AND DISCLAIMS ALL WARRANTIES, EXPRESS AND IMPLIED, INCLUDING WITHOUT LIMITATION ANY IMPLIED WARRANTIES OF MERCHANTABILITY, FITNESS FOR A PARTICULAR PURPOSE OR NON-INFRINGEMENT OF THIRD PARTY INTELLECTUAL PROPERTY RIGHTS.

These resources are intended for skilled developers designing with TI products. You are solely responsible for (1) selecting the appropriate TI products for your application, (2) designing, validating and testing your application, and (3) ensuring your application meets applicable standards, and any other safety, security, regulatory or other requirements.

These resources are subject to change without notice. TI grants you permission to use these resources only for development of an application that uses the TI products described in the resource. Other reproduction and display of these resources is prohibited. No license is granted to any other TI intellectual property right or to any third party intellectual property right. TI disclaims responsibility for, and you will fully indemnify TI and its representatives against, any claims, damages, costs, losses, and liabilities arising out of your use of these resources.

TI’s products are provided subject to TI’s Terms of Sale or other applicable terms available either on ti.com or provided in conjunction with such TI products. TI’s provision of these resources does not expand or otherwise alter TI’s applicable warranties or warranty disclaimers for TI products.

TI objects to and rejects any additional or different terms you may have proposed.

Mailing Address: Texas Instruments, Post Office Box 655303, Dallas, Texas 75265
Copyright © 2022, Texas Instruments Incorporated