CD74HC4518, CD54HC4520, CD74HC4520, CD74HCT4520

High-Speed CMOS Logic Dual Synchronous Counters

Data sheet acquired from Harris Semiconductor
SCHS216D

November 1997 - Revised October 2003

Features

- **Positive or Negative Edge Triggering**
- **Synchronous Internal Carry Propagation**
- **Fanout (Over Temperature Range)**
  - **Standard Outputs . . . . . 10 LSTTL Loads**
  - **Bus Driver Outputs . . . . . 15 LSTTL Loads**
- **Wide Operating Temperature Range . . . -55°C to 125°C**
- **Balanced Propagation Delay and Transition Times**
- **Significant Power Reduction Compared to LSTTL Logic ICs**
- **HC Types**
  - **2V to 6V Operation**
  - **High Noise Immunity: N_{IL} = 30%, N_{IH} = 30% of V_{CC} at V_{CC} = 5V**
- **HCT Types**
  - **4.5V to 5.5V Operation**
  - **Direct LSTTL Input Logic Compatibility, V_{IL}= 0.8V (Max), V_{IH} = 2V (Min)**
  - **CMOS Input Compatibility, $I_I \leq 1\mu A$ at V_{OL}, V_{OH}**

Description

The CD74HC4518 is a dual BCD up-counter. The ’HC4520 and CD74HCT4520 are dual binary up-counters. Each device consists of two independent internally synchronous 4-stage counters. The counter stages are D-type flip-flops having interchangeable CLOCK and ENABLE lines for incrementing on either the positive-going or the negative-going transition of CLOCK. The counters are cleared by high levels on the MASTER RESET lines. The counter can be cascaded in the ripple mode by connecting Q_3 to the ENABLE input of the subsequent counter while the CLOCK input of the latter is held low.

Ordering Information

PART NUMBER	TEMP. RANGE (^{o}C)	PACKAGE
CD54HC4520F3A	-55 to 125	16 Ld CERDIP
CD74HC4518E	-55 to 125	16 Ld PDIP
CD74HC4520E	-55 to 125	16 Ld PDIP
CD74HC4520M	-55 to 125	16 Ld SOIC
CD74HC4520MT	-55 to 125	16 Ld SOIC
CD74HC4520M96	-55 to 125	16 Ld SOIC
CD74HCT4520E	-55 to 125	16 Ld PDIP
CD74HCT4520M	-55 to 125	16 Ld SOIC
CD74HCT4520MT	-55 to 125	16 Ld SOIC
CD74HCT4520M96	-55 to 125	16 Ld SOIC

NOTE: When ordering, use the entire part number. The suffix 96 denotes tape and reel. The suffix T denotes a small-quantity reel of 250.

Pinout

CD54HC4520
(CERDIP)
CD74HC4518
(PDIP)
CD74HC4520, CD74HCT4520,
(PDIP, SOIC)
TOP VIEW

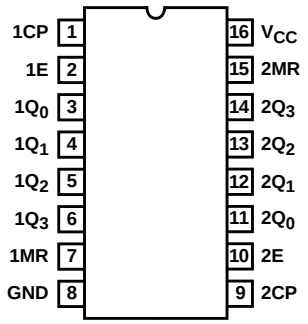

CAUTION: These devices are sensitive to electrostatic discharge. Users should follow proper IC Handling Procedures.

Copyright © 2003, Texas Instruments Incorporated

Functional Diagram

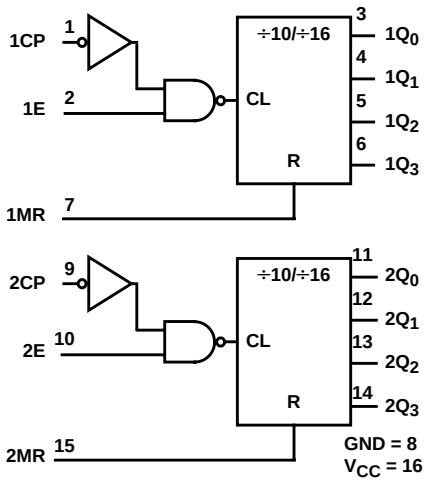

TRUTH TABLE

CP	E	MR	OUTPUT STATE
↑	H	L	Increment Counter
L	↓	L	Increment Counter
↓	X	L	No Change
X	↑	L	No Change
↑	L	L	No Change
H	↓	L	No Change
X	X	H	Q_0 thru Q_3 = L

H = High State.

L = Low State.

↑ = High-to-Low Transition.

↓ = Low-to-High Transition.

X = Don't Care.

Absolute Maximum Ratings

DC Supply Voltage, V_{CC} . . . . . -0.5V to 7V
DC Input Diode Current, I_{IK}
For V_I < -0.5V or V_I > V_{CC} + 0.5V . . . . . ±20mA
DC Output Diode Current, I_{OK}
For V_O < -0.5V or V_O > V_{CC} + 0.5V . . . . . ±20mA
DC Output Source or Sink Current per Output Pin, I_O
For V_O > -0.5V or V_O < V_{CC} + 0.5V . . . . . ±25mA
DC V_{CC} or Ground Current, I_{CC} . . . . . ±50mA

Operating Conditions

Temperature Range, T_A . . . . . -55°C to 125°C
Supply Voltage Range, V_{CC}
HC Types . . . . . 2V to 6V
HCT Types . . . . . 4.5V to 5.5V
DC Input or Output Voltage, V_I, V_O . . . . . 0V to V_{CC}
Input Rise and Fall Time
2V . . . . . 1000ns (Max)
4.5V. . . . . 500ns (Max)
6V . . . . . 400ns (Max)

Thermal Information

Thermal Resistance (Typical, Note 1) θ_{JA} (^{o}C/W)
E (PDIP) Package 67
M (SOIC) Package. 73
Maximum Junction Temperature . . . . . 150°C
Maximum Storage Temperature Range . . . . . -65°C to 150°C
Maximum Lead Temperature (Soldering 10s) . . . . . 300°C
(SOIC - Lead Tips Only)

CAUTION: Stresses above those listed in "Absolute Maximum Ratings" may cause permanent damage to the device. This is a stress only rating and operation of the device at these or any other conditions above those indicated in the operational sections of this specification is not implied.

NOTE:

1. The package thermal impedance is calculated in accordance with JESD 51-7.

DC Electrical Specifications

PARAMETER	SYMBOL	TEST CONDITIONS V_I (V)	TEST CONDITIONS I_O (mA)	V_{CC} (V)	25°C MIN	25°C TYP	25°C MAX	-40°C TO 85°C MIN	-40°C TO 85°C MAX	-55°C TO 125°C MIN	-55°C TO 125°C MAX	UNITS
HC TYPES												
High Level Input Voltage	V_{IH}	-	-	2	1.5	-	-	1.5	-	1.5	-	V
				4.5	3.15	-	-	3.15	-	3.15	-	V
				6	4.2	-	-	4.2	-	4.2	-	V
Low Level Input Voltage	V_{IL}	-	-	2	-	-	0.5	-	0.5	-	0.5	V
				4.5	-	-	1.35	-	1.35	-	1.35	V
				6	-	-	1.8	-	1.8	-	1.8	V
High Level Output Voltage CMOS Loads	V_{OH}	V_{IH} or V_{IL}	-0.02	2	1.9	-	-	1.9	-	1.9	-	V
			-0.02	4.5	4.4	-	-	4.4	-	4.4	-	V
			-0.02	6	5.9	-	-	5.9	-	5.9	-	V
High Level Output Voltage TTL Loads			-	-	-	-	-	-	-	-	-	V
			-4	4.5	3.98	-	-	3.84	-	3.7	-	V
			-5.2	6	5.48	-	-	5.34	-	5.2	-	V
Low Level Output Voltage CMOS Loads	V_{OL}	V_{IH} or V_{IL}	0.02	2	-	-	0.1	-	0.1	-	0.1	V
			0.02	4.5	-	-	0.1	-	0.1	-	0.1	V
			0.02	6	-	-	0.1	-	0.1	-	0.1	V
Low Level Output Voltage TTL Loads			-	-	-	-	-	-	-	-	-	V
			4	4.5	-	-	0.26	-	0.33	-	0.4	V
			5.2	6	-	-	0.26	-	0.33	-	0.4	V
Input Leakage Current	I_I	V_{CC} or GND	-	6	-	-	±0.1	-	±1	-	±1	µA
Quiescent Device Current	I_{CC}	V_{CC} or GND	0	6	-	-	8	-	80	-	160	µA

DC Electrical Specifications (Continued)

PARAMETER	SYMBOL	TEST CONDITIONS V_I (V)	TEST CONDITIONS I_O (mA)	V_{CC} (V)	25°C MIN	25°C TYP	25°C MAX	-40°C TO 85°C MIN	-40°C TO 85°C MAX	-55°C TO 125°C MIN	-55°C TO 125°C MAX	UNITS
HCT TYPES												
High Level Input Voltage	V_{IH}	-	-	4.5 to 5.5	2	-	-	2	-	2	-	V
Low Level Input Voltage	V_{IL}	-	-	4.5 to 5.5	-	-	0.8	-	0.8	-	0.8	V
High Level Output Voltage CMOS Loads	V_{OH}	V_{IH} or V_{IL}	-0.02	4.5	4.4	-	-	4.4	-	4.4	-	V
High Level Output Voltage TTL Loads			-4	4.5	3.98	-	-	3.84	-	3.7	-	V
Low Level Output Voltage CMOS Loads	V_{OL}	V_{IH} or V_{IL}	0.02	4.5	-	-	0.1	-	0.1	-	0.1	V
Low Level Output Voltage TTL Loads			4	4.5	-	-	0.26	-	0.33	-	0.4	V
Input Leakage Current	I_I	V_{CC} and GND	0	5.5	-	-	±0.1	-	±1	-	±1	µA
Quiescent Device Current	I_{CC}	V_{CC} or GND	0	5.5	-	-	8	-	80	-	160	µA
Additional Quiescent Device Current Per Input Pin: 1 Unit Load	ΔI_{CC} (Note 2)	V_{CC} -2.1	-	4.5 to 5.5	-	100	360	-	450	-	490	µA

NOTE:

2. For dual-supply systems theoretical worst case (V_I = 2.4V, V_{CC} = 5.5V) specification is 1.8mA.

HCT Input Loading Table

INPUT	UNIT LOADS
MR	1.2
CP	0.25
ENABLE	0.5

NOTE: Unit Load is ΔI_{CC} limit specified in DC Electrical Table, e.g., 360µA max at 25°C.

Prerequisite for Switching Specifications

PARAMETER	SYMBOL	V_{CC} (V)	25°C MIN	25°C TYP	25°C MAX	-40°C TO 85°C MIN	-40°C TO 85°C MAX	-55°C TO 125°C MIN	-55°C TO 125°C MAX	UNITS
HC TYPES										
Maximum Clock Frequency	f_{MAX}	2	6	-	-	5	-	4	-	MHz
		4.5	30	-	-	24	-	20	-	MHz
		6	35	-	-	28	-	24	-	MHz
CP Pulse Width	t_W	2	80	-	-	100	-	120	-	ns
		4.5	16	-	-	20	-	24	-	ns
		6	14	-	-	17	-	20	-	ns
MR Pulse Width	t_W	2	100	-	-	125	-	150	-	ns
		4.5	20	-	-	25	-	30	-	ns
		6	17	-	-	21	-	26	-	ns

Prerequisite for Switching Specifications (Continued)

PARAMETER	SYMBOL	V_{CC} (V)	25°C MIN	25°C TYP	25°C MAX	-40°C TO 85°C MIN	-40°C TO 85°C MAX	-55°C TO 125°C MIN	-55°C TO 125°C MAX	UNITS
Set-up Time, Enable to CP	t_{SU}	2	80	-	-	100	-	120	-	ns
		4.5	16	-	-	20	-	24	-	ns
		6	14	-	-	17	-	20	-	ns
Removal Time, MR to CP	t_{REM}	2	0	-	-	0	-	0	-	ns
		4.5	0	-	-	0	-	0	-	ns
		6	0	-	-	0	-	0	-	ns
Set-up Time, CP to Enable	t_{SU}	2	80	-	-	100	-	120	-	ns
		4.5	16	-	-	20	-	24	-	ns
		6	14	-	-	17	-	20	-	ns
Removal Time, MR to Enable	t_{REM}	2	0	-	-	0	-	0	-	ns
		4.5	0	-	-	0	-	0	-	ns
		6	0	-	-	0	-	0	-	ns
HCT TYPES										
Maximum Clock Frequency	f_{MAX}	4.5	25	-	-	20	-	17	-	MHz
Clock Pulse Width	t_W	4.5	20	-	-	25	-	30	-	ns
MR Pulse Width	t_W	4.5	20	-	-	25	-	30	-	ns
Set-up Time, Enable to CP	t_{SU}	4.5	16	-	-	20	-	24	-	ns
Removal Time, MR tp Enable	t_{REM}	4.5	0	-	-	0	-	0	-	ns

Switching Specifications Input t_r, t_f = 6ns

PARAMETER	SYMBOL	TEST CONDITIONS	V_{CC} (V)	25°C MIN	25°C TYP	25°C MAX	-40°C TO 85°C MIN	-40°C TO 85°C MAX	-55°C TO 125°C MIN	-55°C TO 125°C MAX	UNITS
HC TYPES											
Propagation Delay CP to Q_n	t_{PLH}, t_{PHL}	C_L = 50pF	2	-	-	240	-	300	-	360	ns
		C_L = 50pF	4.5	-	-	48	-	60	-	72	ns
		C_L = 15pF	5	-	20	-	-	-	-	-	ns
		C_L = 50pF	6	-	-	41	-	51	-	61	ns
Enable to Q_n	t_{PLH}, t_{PHL}	C_L = 50pF	2	-	-	240	-	300	-	360	ns
		C_L = 50pF	4.5	-	-	48	-	60	-	72	ns
		C_L = 15pF	5	-	20	-	-	-	-	-	ns
		C_L = 50pF	6	-	-	41	-	51	-	61	ns
MR to Q_n	t_{PLH}, t_{PHL}	C_L = 50pF	2	-	-	150	-	190	-	225	ns
		C_L = 50pF	4.5	-	-	30	-	38	-	45	ns
		C_L = 15pF	5	-	12	-	-	-	-	-	ns
		C_L = 50pF	6	-	-	26	-	33	-	38	ns
Output Transition Time	t_{THL}, t_{TLH}	C_L = 50pF	2	-	-	75	-	95	-	110	ns
		C_L = 50pF	4.5	-	-	15	-	19	-	22	ns
		CL = 50pF	6			13		16		19	ns
Input Capacitance	C_{IN}	C_L = 50pF	-	-	-	10	-	10	-	10	pF
Maximum Clock Frequency	f_{MAX}	CL = 15pF	5		60						MHz
Power Dissipation Capacitance (Note 3, 4)	C_{PD}	C_L = 15pF	5	-	33	-	-	-	-	-	pF

Switching Specifications Input t_r, t_f = 6ns **(Continued)**

PARAMETER	SYMBOL	TEST CONDITIONS	V_{CC} (V)	25°C MIN	25°C TYP	25°C MAX	-40°C TO 85°C MIN	-40°C TO 85°C MAX	-55°C TO 125°C MIN	-55°C TO 125°C MAX	UNITS
HCT TYPES											
Propagation Delay											
CP to Q_n	t_{PLH}, t_{PHL}	C_L = 50pF	4.5	-	-	53	-	66	-	80	ns
		C_L = 15pF	5	-	22	-	-	-	-	-	ns
Enable to Q_n	t_{PLH}, t_{PHL}	C_L = 50pF	4.5	-	-	55	-	69	-	83	ns
		C_L = 15pF	5	-	23	-	-	-	-	-	ns
MR to Q_n	t_{PLH}, t_{PHL}	C_L = 50pF	4.5	-	-	35	-	44	-	53	ns
		C_L = 15pF	5	-	14	-	-	-	-	-	ns
Output Transition Time	t_{THL}, t_{TLH}	C_L = 50pF	4.5	-	-	15	-	19	-	22	ns
Input Capacitance	C_{IN}	C_L = 50pF	-	-	-	10	-	10	-	10	pF
Maximum Clock Frequency	f_{MAX}	CL = 15pF	5	-	50	-	-	-	-	-	MHz
Power Dissipation Capacitance (Note 3,4)	C_{PD}	-	5	-	33	-	-	-	-	-	pF

NOTES:

3. C_{PD} is used to determine the dynamic power consumption, per counter.
4. $P_D = V_{CC}^2 f_i (C_{PD} + C_L)$ where f_i = Input Frequency, C_L = Output Load Capacitance, V_{CC} = Supply Voltage.

Timing Diagram

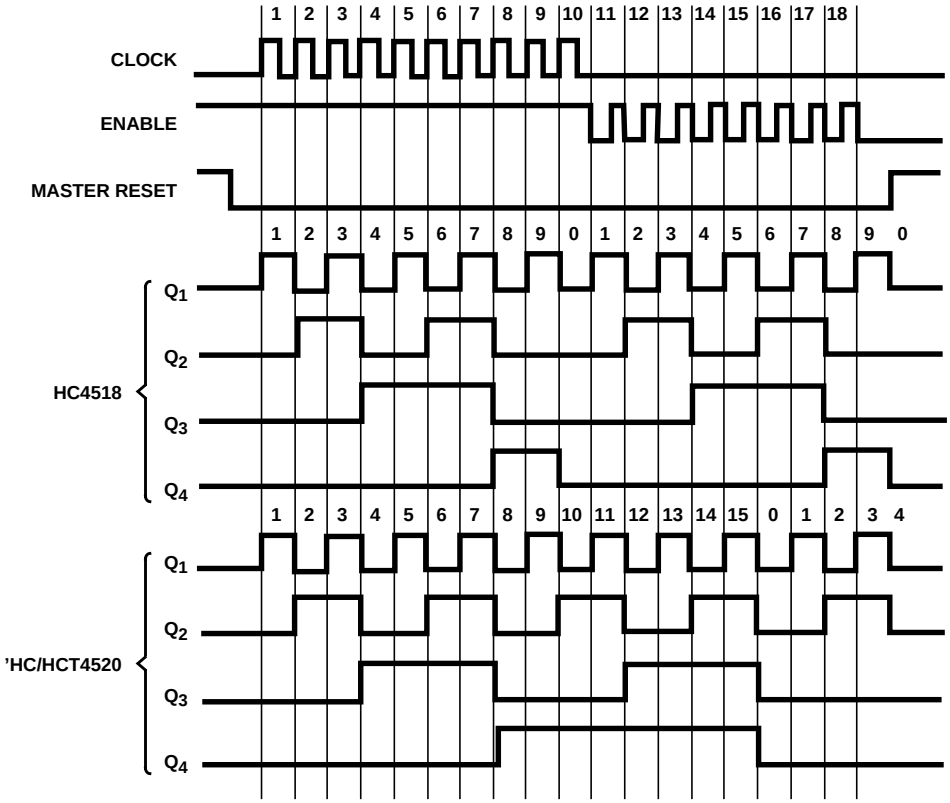

FIGURE 1.

Waveforms

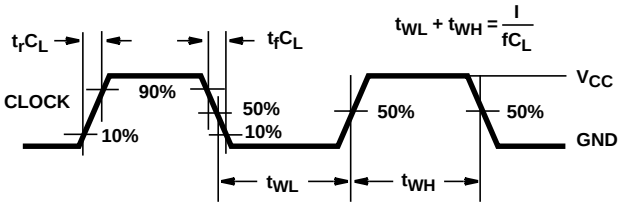

NOTE: Outputs should be switching from 10% V_{CC} to 90% V_{CC} in accordance with device truth table. For f_{MAX}, input duty cycle = 50%.

FIGURE 2. HC CLOCK PULSE RISE AND FALL TIMES AND PULSE WIDTH

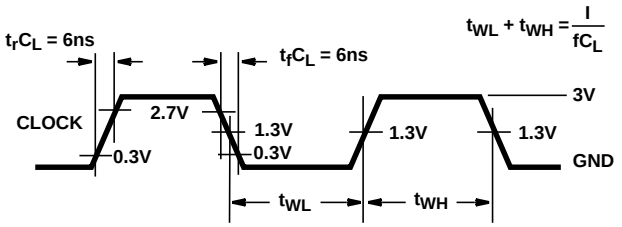

NOTE: Outputs should be switching from 10% V_{CC} to 90% V_{CC} in accordance with device truth table. For f_{MAX}, input duty cycle = 50%.

FIGURE 3. HCT CLOCK PULSE RISE AND FALL TIMES AND PULSE WIDTH

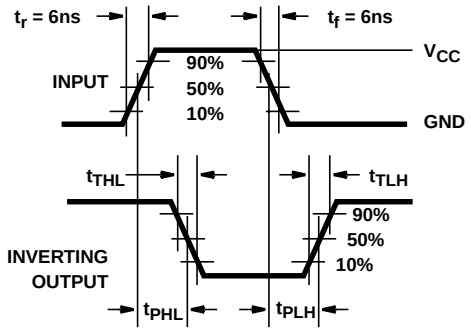

FIGURE 4. HC TRANSITION TIMES AND PROPAGATION DELAY TIMES, COMBINATION LOGIC

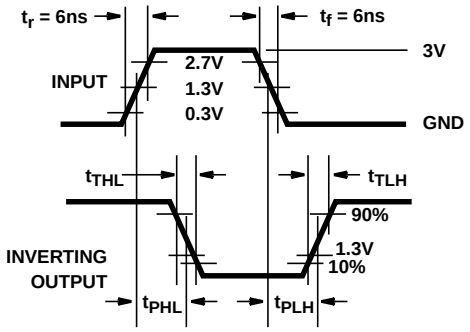

FIGURE 5. HCT TRANSITION TIMES AND PROPAGATION DELAY TIMES, COMBINATION LOGIC

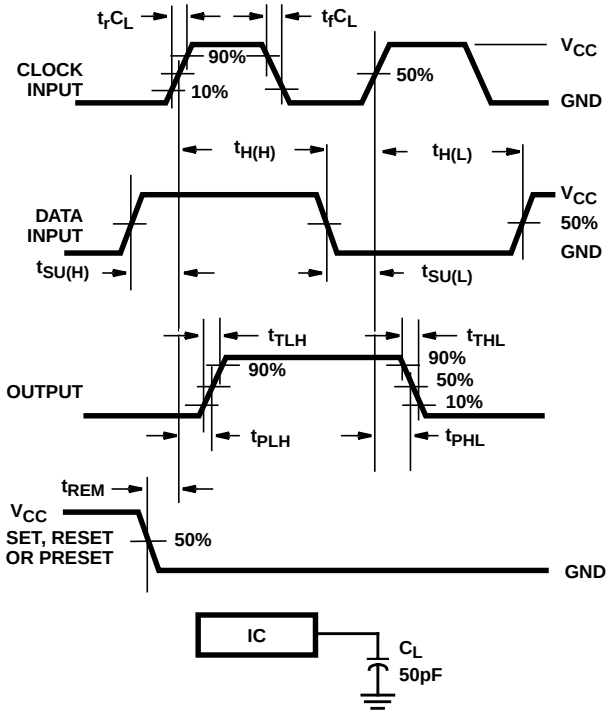

FIGURE 6. HC SETUP TIMES, HOLD TIMES, REMOVAL TIME, AND PROPAGATION DELAY TIMES FOR EDGE TRIGGERED SEQUENTIAL LOGIC CIRCUITS

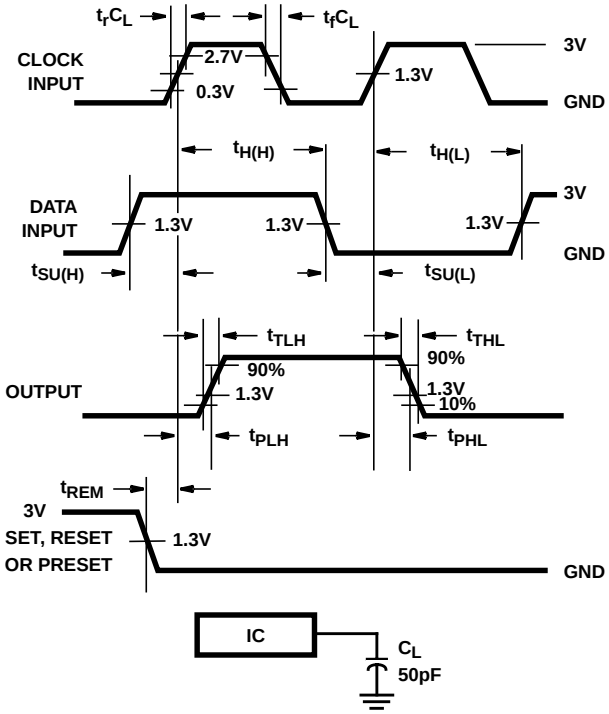

FIGURE 7. HCT SETUP TIMES, HOLD TIMES, REMOVAL TIME, AND PROPAGATION DELAY TIMES FOR EDGE TRIGGERED SEQUENTIAL LOGIC CIRCUITS

PACKAGING INFORMATION

Orderable Device	Status (1)	Package Type	Package Drawing	Pins	Package Qty	Eco Plan (2)	Lead finish/ Ball material (6)	MSL Peak Temp (3)	Op Temp (°C)	Device Marking (4/5)	Samples
5962-8995401EA	ACTIVE	CDIP	J	16	1	Non-RoHS & Green	SNPB	N / A for Pkg Type	-55 to 125	5962-8995401EA CD54HC4520F3A	Samples
CD54HC4520F	ACTIVE	CDIP	J	16	1	Non-RoHS & Green	SNPB	N / A for Pkg Type	-55 to 125	CD54HC4520F	Samples
CD54HC4520F3A	ACTIVE	CDIP	J	16	1	Non-RoHS & Green	SNPB	N / A for Pkg Type	-55 to 125	5962-8995401EA CD54HC4520F3A	Samples
CD74HC4518E	ACTIVE	PDIP	N	16	25	RoHS & Green	NIPDAU	N / A for Pkg Type	-55 to 125	CD74HC4518E	Samples
CD74HC4520E	ACTIVE	PDIP	N	16	25	RoHS & Green	NIPDAU	N / A for Pkg Type	-55 to 125	CD74HC4520E	Samples
CD74HC4520M	ACTIVE	SOIC	D	16	40	RoHS & Green	NIPDAU	Level-1-260C-UNLIM	-55 to 125	HC4520M	Samples
CD74HC4520M96	ACTIVE	SOIC	D	16	2500	RoHS & Green	NIPDAU	Level-1-260C-UNLIM	-55 to 125	HC4520M	Samples
CD74HC4520M96G4	ACTIVE	SOIC	D	16	2500	RoHS & Green	NIPDAU	Level-1-260C-UNLIM	-55 to 125	HC4520M	Samples
CD74HC4520ME4	ACTIVE	SOIC	D	16	40	RoHS & Green	NIPDAU	Level-1-260C-UNLIM	-55 to 125	HC4520M	Samples
CD74HC4520MT	ACTIVE	SOIC	D	16	250	RoHS & Green	NIPDAU	Level-1-260C-UNLIM	-55 to 125	HC4520M	Samples
CD74HCT4520E	ACTIVE	PDIP	N	16	25	RoHS & Green	NIPDAU	N / A for Pkg Type	-55 to 125	CD74HCT4520E	Samples
CD74HCT4520M	ACTIVE	SOIC	D	16	40	RoHS & Green	NIPDAU	Level-1-260C-UNLIM	-55 to 125	HCT4520M	Samples
CD74HCT4520M96	ACTIVE	SOIC	D	16	2500	RoHS & Green	NIPDAU	Level-1-260C-UNLIM	-55 to 125	HCT4520M	Samples

(1) The marketing status values are defined as follows:
ACTIVE: Product device recommended for new designs.
LIFEBUY: TI has announced that the device will be discontinued, and a lifetime-buy period is in effect.
NRND: Not recommended for new designs. Device is in production to support existing customers, but TI does not recommend using this part in a new design.
PREVIEW: Device has been announced but is not in production. Samples may or may not be available.
OBSOLETE: TI has discontinued the production of the device.

(2) **RoHS:** TI defines "RoHS" to mean semiconductor products that are compliant with the current EU RoHS requirements for all 10 RoHS substances, including the requirement that RoHS substance do not exceed 0.1% by weight in homogeneous materials. Where designed to be soldered at high temperatures, "RoHS" products are suitable for use in specified lead-free processes. TI may reference these types of products as "Pb-Free".
RoHS Exempt: TI defines "RoHS Exempt" to mean products that contain lead but are compliant with EU RoHS pursuant to a specific EU RoHS exemption.

Green: TI defines "Green" to mean the content of Chlorine (Cl) and Bromine (Br) based flame retardants meet JS709B low halogen requirements of <=1000ppm threshold. Antimony trioxide based flame retardants must also meet the <=1000ppm threshold requirement.

(3) MSL, Peak Temp. - The Moisture Sensitivity Level rating according to the JEDEC industry standard classifications, and peak solder temperature.

(4) There may be additional marking, which relates to the logo, the lot trace code information, or the environmental category on the device.

(5) Multiple Device Markings will be inside parentheses. Only one Device Marking contained in parentheses and separated by a "~" will appear on a device. If a line is indented then it is a continuation of the previous line and the two combined represent the entire Device Marking for that device.

(6) Lead finish/Ball material - Orderable Devices may have multiple material finish options. Finish options are separated by a vertical ruled line. Lead finish/Ball material values may wrap to two lines if the finish value exceeds the maximum column width.

Important Information and Disclaimer: The information provided on this page represents TI's knowledge and belief as of the date that it is provided. TI bases its knowledge and belief on information provided by third parties, and makes no representation or warranty as to the accuracy of such information. Efforts are underway to better integrate information from third parties. TI has taken and continues to take reasonable steps to provide representative and accurate information but may not have conducted destructive testing or chemical analysis on incoming materials and chemicals. TI and TI suppliers consider certain information to be proprietary, and thus CAS numbers and other limited information may not be available for release.

In no event shall TI's liability arising out of such information exceed the total purchase price of the TI part(s) at issue in this document sold by TI to Customer on an annual basis.

OTHER QUALIFIED VERSIONS OF CD54HC4520, CD74HC4520 :

- Catalog : CD74HC4520
- Military : CD54HC4520

NOTE: Qualified Version Definitions:

- Catalog - TI's standard catalog product
- Military - QML certified for Military and Defense Applications

TAPE AND REEL INFORMATION

REEL DIMENSIONS

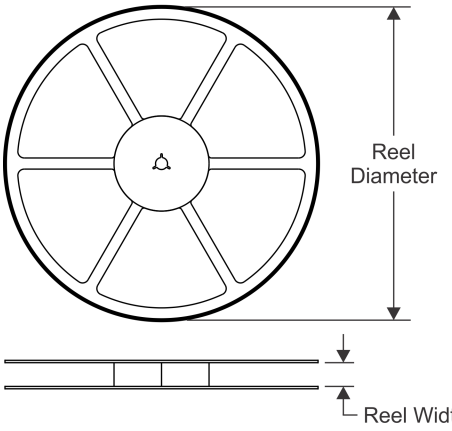

TAPE DIMENSIONS

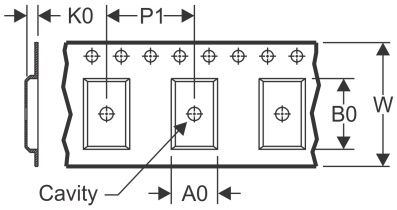

A0	Dimension designed to accommodate the component width
B0	Dimension designed to accommodate the component length
K0	Dimension designed to accommodate the component thickness
W	Overall width of the carrier tape
P1	Pitch between successive cavity centers

QUADRANT ASSIGNMENTS FOR PIN 1 ORIENTATION IN TAPE

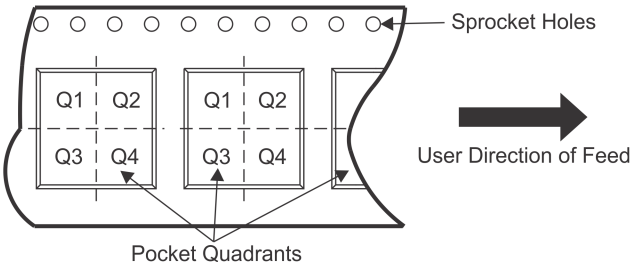

*All dimensions are nominal

Device	Package Type	Package Drawing	Pins	SPQ	Reel Diameter (mm)	Reel Width W1 (mm)	A0 (mm)	B0 (mm)	K0 (mm)	P1 (mm)	W (mm)	Pin1 Quadrant
CD74HC4520M96	SOIC	D	16	2500	330.0	16.4	6.5	10.3	2.1	8.0	16.0	Q1
CD74HCT4520M96	SOIC	D	16	2500	330.0	16.4	6.5	10.3	2.1	8.0	16.0	Q1

TAPE AND REEL BOX DIMENSIONS

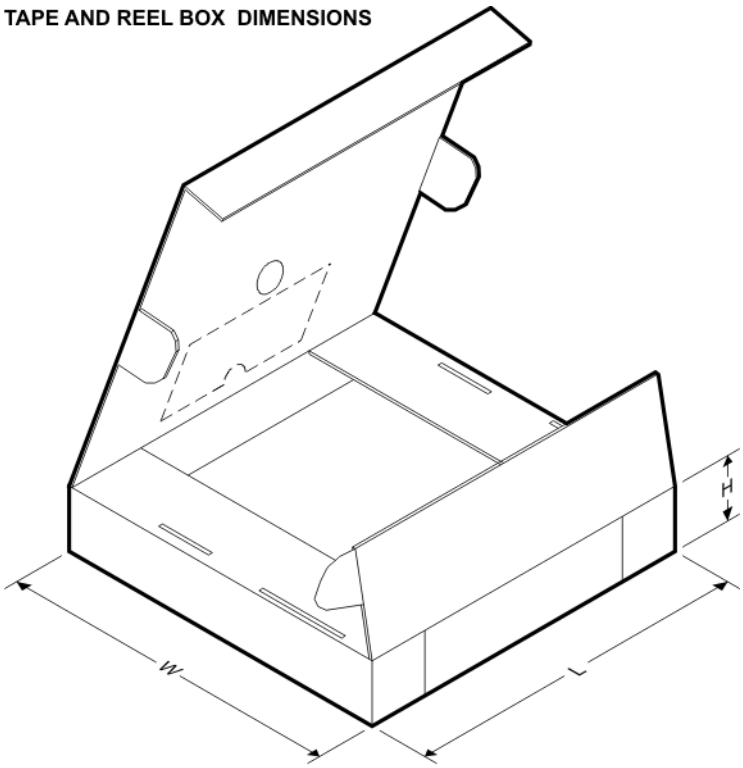

*All dimensions are nominal

Device	Package Type	Package Drawing	Pins	SPQ	Length (mm)	Width (mm)	Height (mm)
CD74HC4520M96	SOIC	D	16	2500	340.5	336.1	32.0
CD74HCT4520M96	SOIC	D	16	2500	340.5	336.1	32.0

TUBE

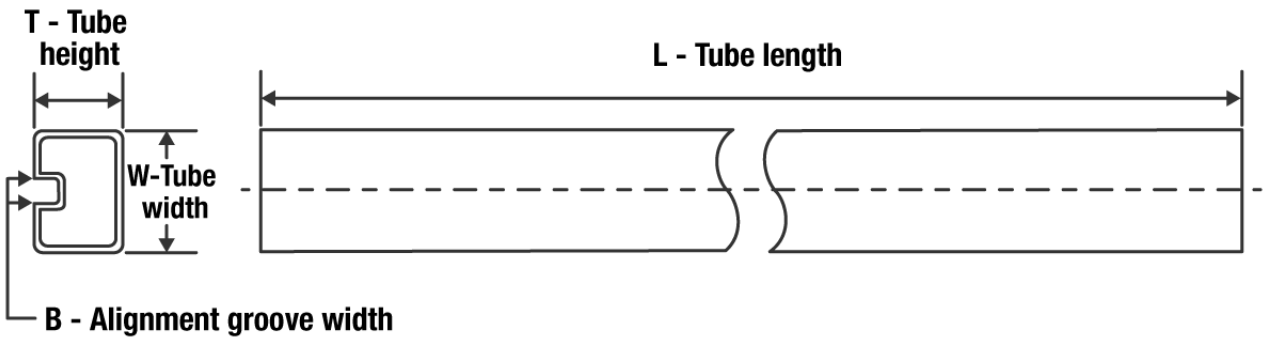

*All dimensions are nominal

Device	Package Name	Package Type	Pins	SPQ	L (mm)	W (mm)	T (µm)	B (mm)
CD74HC4518E	N	PDIP	16	25	506	13.97	11230	4.32
CD74HC4518E	N	PDIP	16	25	506	13.97	11230	4.32
CD74HC4520E	N	PDIP	16	25	506	13.97	11230	4.32
CD74HC4520E	N	PDIP	16	25	506	13.97	11230	4.32
CD74HC4520M	D	SOIC	16	40	507	8	3940	4.32
CD74HC4520ME4	D	SOIC	16	40	507	8	3940	4.32
CD74HCT4520E	N	PDIP	16	25	506	13.97	11230	4.32
CD74HCT4520E	N	PDIP	16	25	506	13.97	11230	4.32
CD74HCT4520M	D	SOIC	16	40	507	8	3940	4.32

J (R–GDIP–T**) CERAMIC DUAL IN–LINE PACKAGE

14 LEADS SHOWN

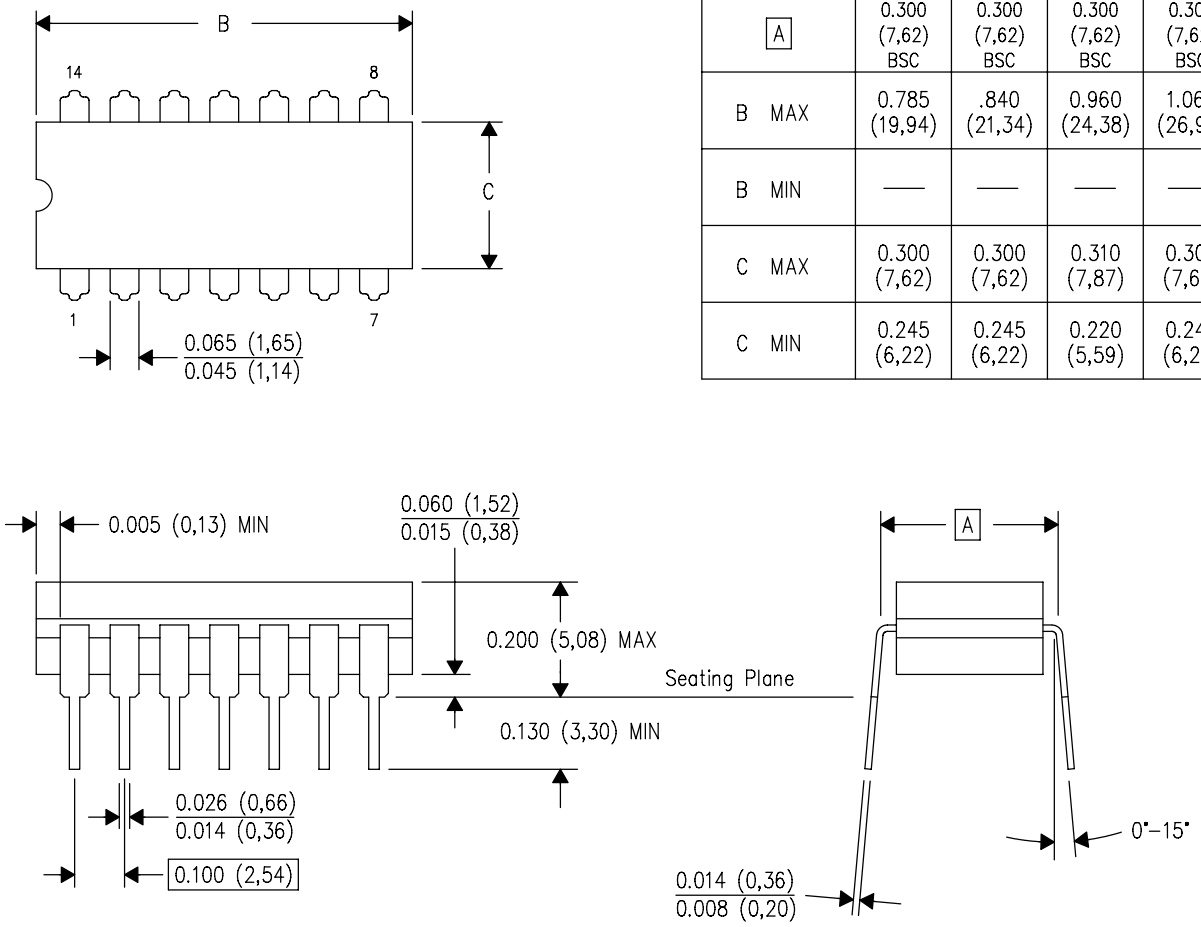

DIM \ PINS **	14	16	18	20
A	0.300 (7,62) BSC	0.300 (7,62) BSC	0.300 (7,62) BSC	0.300 (7,62) BSC
B MAX	0.785 (19,94)	.840 (21,34)	0.960 (24,38)	1.060 (26,92)
B MIN	—	—	—	—
C MAX	0.300 (7,62)	0.300 (7,62)	0.310 (7,87)	0.300 (7,62)
C MIN	0.245 (6,22)	0.245 (6,22)	0.220 (5,59)	0.245 (6,22)

4040083/F 03/03

NOTES:
- A. All linear dimensions are in inches (millimeters).
- B. This drawing is subject to change without notice.
- C. This package is hermetically sealed with a ceramic lid using glass frit.
- D. Index point is provided on cap for terminal identification only on press ceramic glass frit seal only.
- E. Falls within MIL STD 1835 GDIP1–T14, GDIP1–T16, GDIP1–T18 and GDIP1–T20.

N (R–PDIP–T**) PLASTIC DUAL–IN–LINE PACKAGE

16 PINS SHOWN

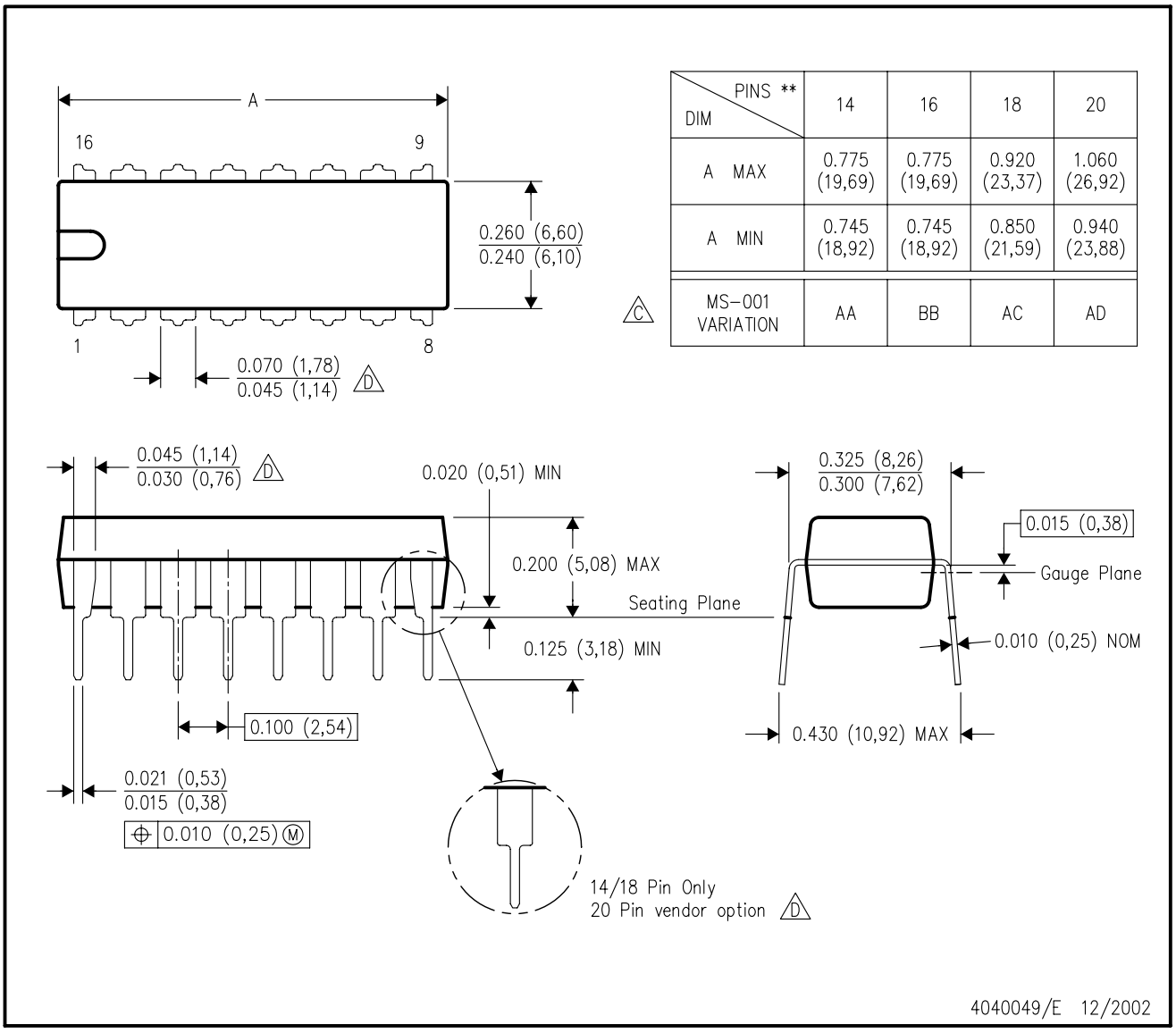

DIM \ PINS **	14	16	18	20
A MAX	0.775 (19,69)	0.775 (19,69)	0.920 (23,37)	1.060 (26,92)
A MIN	0.745 (18,92)	0.745 (18,92)	0.850 (21,59)	0.940 (23,88)
MS–001 VARIATION (C)	AA	BB	AC	AD

NOTES:
A. All linear dimensions are in inches (millimeters).
B. This drawing is subject to change without notice.
C. Falls within JEDEC MS–001, except 18 and 20 pin minimum body length (Dim A).
D. The 20 pin end lead shoulder width is a vendor option, either half or full width.

D (R–PDSO–G16) PLASTIC SMALL OUTLINE

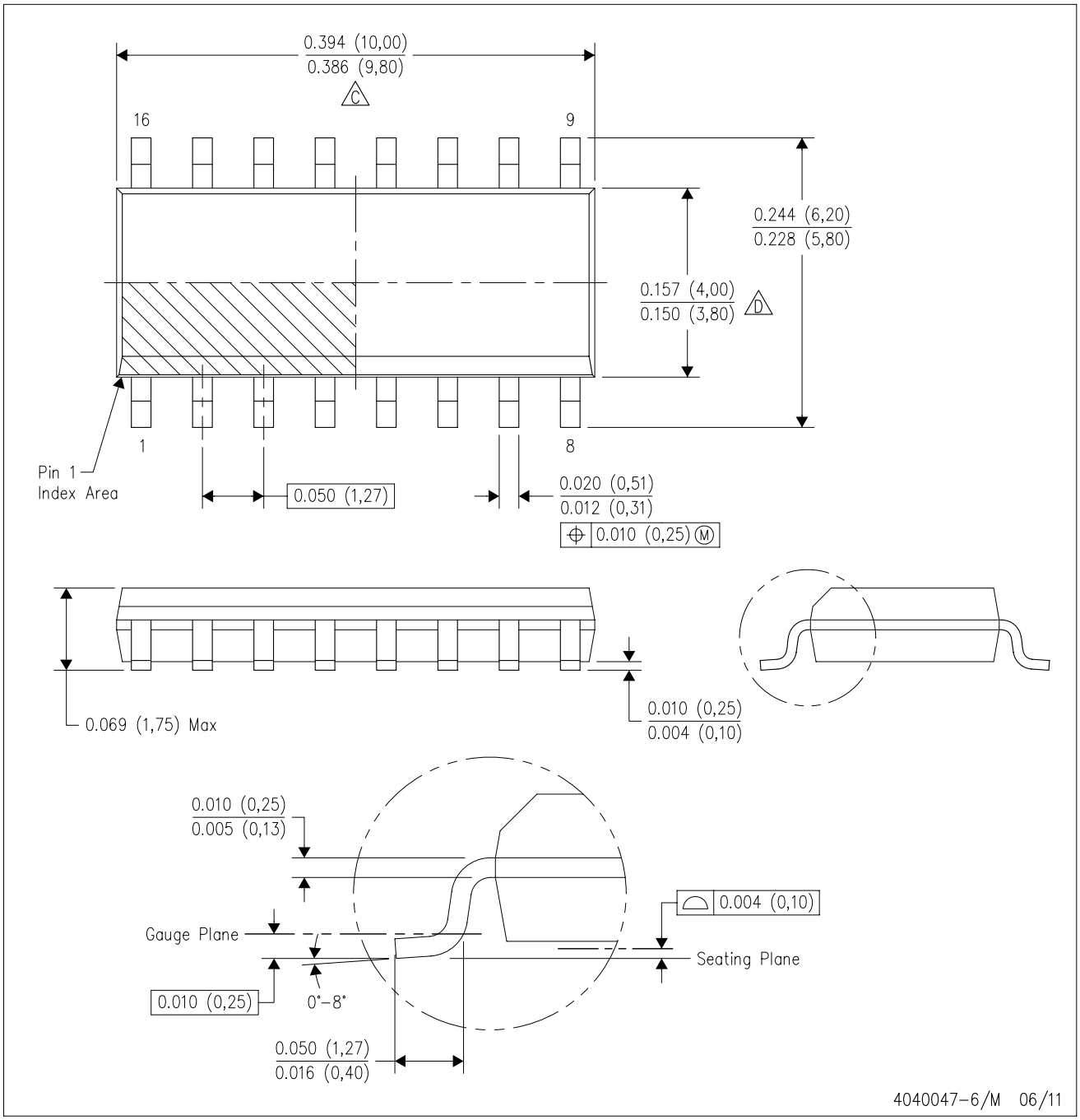

NOTES:
A. All linear dimensions are in inches (millimeters).
B. This drawing is subject to change without notice.
C. Body length does not include mold flash, protrusions, or gate burrs. Mold flash, protrusions, or gate burrs shall not exceed 0.006 (0,15) each side.
D. Body width does not include interlead flash. Interlead flash shall not exceed 0.017 (0,43) each side.
E. Reference JEDEC MS–012 variation AC.

D (R–PDSO–G16) PLASTIC SMALL OUTLINE

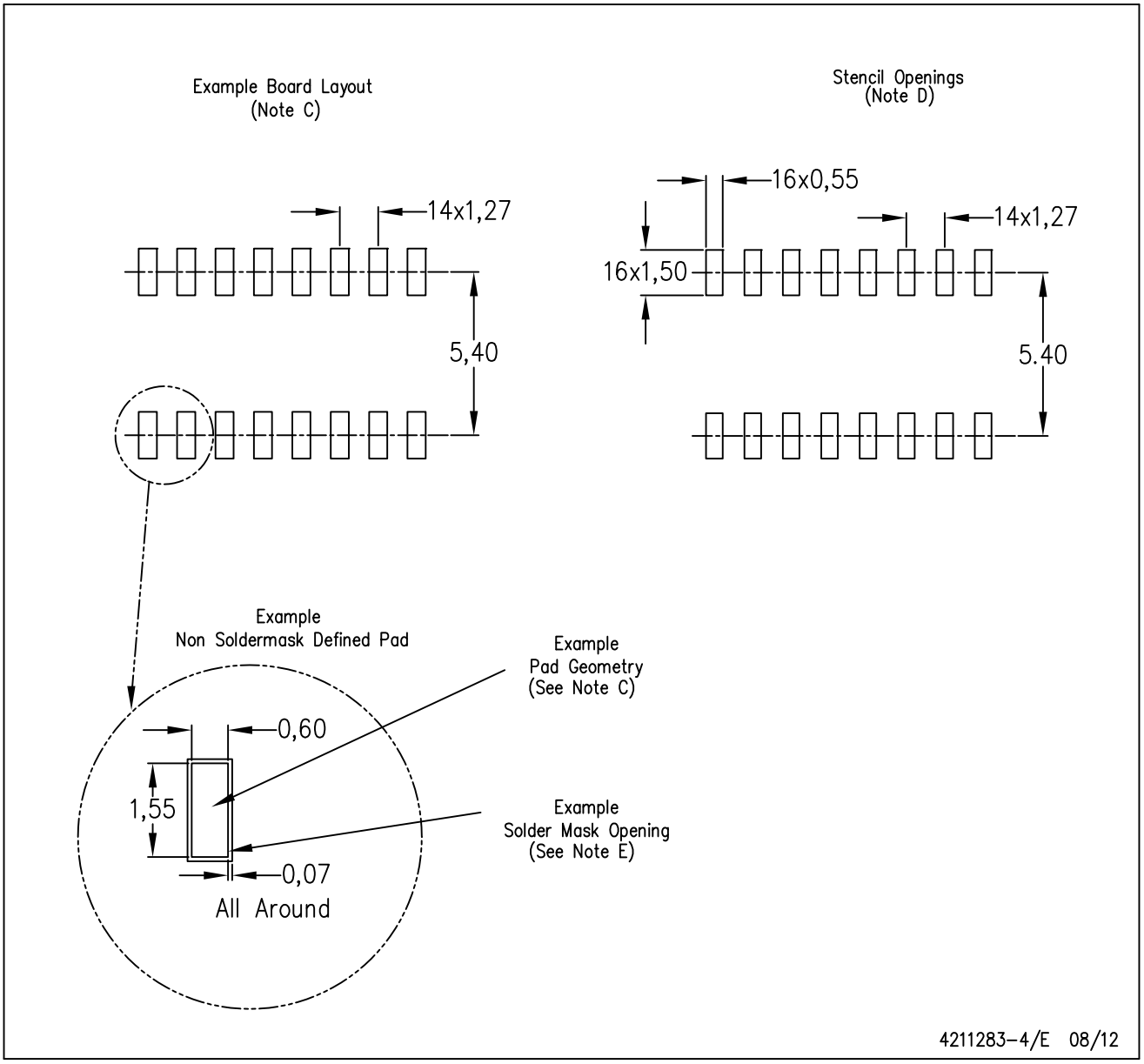

NOTES:
A. All linear dimensions are in millimeters.
B. This drawing is subject to change without notice.
C. Publication IPC–7351 is recommended for alternate designs.
D. Laser cutting apertures with trapezoidal walls and also rounding corners will offer better paste release. Customers should contact their board assembly site for stencil design recommendations. Refer to IPC–7525 for other stencil recommendations.
E. Customers should contact their board fabrication site for solder mask tolerances between and around signal pads.

IMPORTANT NOTICE AND DISCLAIMER

TI PROVIDES TECHNICAL AND RELIABILITY DATA (INCLUDING DATA SHEETS), DESIGN RESOURCES (INCLUDING REFERENCE DESIGNS), APPLICATION OR OTHER DESIGN ADVICE, WEB TOOLS, SAFETY INFORMATION, AND OTHER RESOURCES “AS IS” AND WITH ALL FAULTS, AND DISCLAIMS ALL WARRANTIES, EXPRESS AND IMPLIED, INCLUDING WITHOUT LIMITATION ANY IMPLIED WARRANTIES OF MERCHANTABILITY, FITNESS FOR A PARTICULAR PURPOSE OR NON-INFRINGEMENT OF THIRD PARTY INTELLECTUAL PROPERTY RIGHTS.

These resources are intended for skilled developers designing with TI products. You are solely responsible for (1) selecting the appropriate TI products for your application, (2) designing, validating and testing your application, and (3) ensuring your application meets applicable standards, and any other safety, security, regulatory or other requirements.

These resources are subject to change without notice. TI grants you permission to use these resources only for development of an application that uses the TI products described in the resource. Other reproduction and display of these resources is prohibited. No license is granted to any other TI intellectual property right or to any third party intellectual property right. TI disclaims responsibility for, and you will fully indemnify TI and its representatives against, any claims, damages, costs, losses, and liabilities arising out of your use of these resources.

TI’s products are provided subject to TI’s Terms of Sale or other applicable terms available either on ti.com or provided in conjunction with such TI products. TI’s provision of these resources does not expand or otherwise alter TI’s applicable warranties or warranty disclaimers for TI products.

TI objects to and rejects any additional or different terms you may have proposed.

Mailing Address: Texas Instruments, Post Office Box 655303, Dallas, Texas 75265
Copyright © 2022, Texas Instruments Incorporated