CDx4HC173、CDx4HCT173 三态高速 CMOS 逻辑四路 D 型触发器

1 特性

- 三态缓冲输出
- 门控输入和输出使能
- 扇出（在温度范围内）
  - 标准输出：10 个 LSTTL 负载
  - 总线驱动器输出：15 个 LSTTL 负载
- 宽工作温度范围：-55°C 至 125°C
- 平衡的传播延迟及转换时间
- 与 LSTTL 逻辑 IC 相比，可显著降低功耗
- HC 类型
  - 工作电压为 2V 至 6V
  - 高抗噪性：当 V_{CC} = 5 V 时，N_{IL} = 30%，N_{IH} = V_{CC} 的 30%
- HCT 类型
  - 4.5 V 至 5.5 V 工作电压
  - 直接 LSTTL 输入逻辑兼容性，V_{IL} = 0.8V（最大值），V_{IH} = 2V（最小值）
  - CMOS 输入兼容性，当电压为 V_{OL}、V_{OH} 时，I_I ≤ 1μA

2 说明

CDx4HC173 和 CDx4HCT173 包含四个独立的 D 型触发器，带有共享时钟 (CP)、复位 (MR) 和数据使能（$\overline{E1}$，$\overline{E2}$）引脚。

器件信息

器件型号	封装[1]	封装尺寸（标称值）
CD54HC173F	CDIP (16)	21.34mm × 6.92mm
CD54HCT173F3A	CDIP (16)	21.34mm × 6.92mm
CD74HC173E	PDIP (16)	19.31mm × 6.35mm
CD74HCT173E	PDIP (16)	19.31mm × 6.35mm
CD74HC173M	SOIC (16)	9.90mm × 3.90mm
CD74HCT173M	SOIC (16)	9.90mm × 3.90mm
CD74HC173PW	TSSOP (16)	5.00mm × 4.40mm

(1) 如需了解所有封装，请参阅数据表末尾的可订购产品附录。

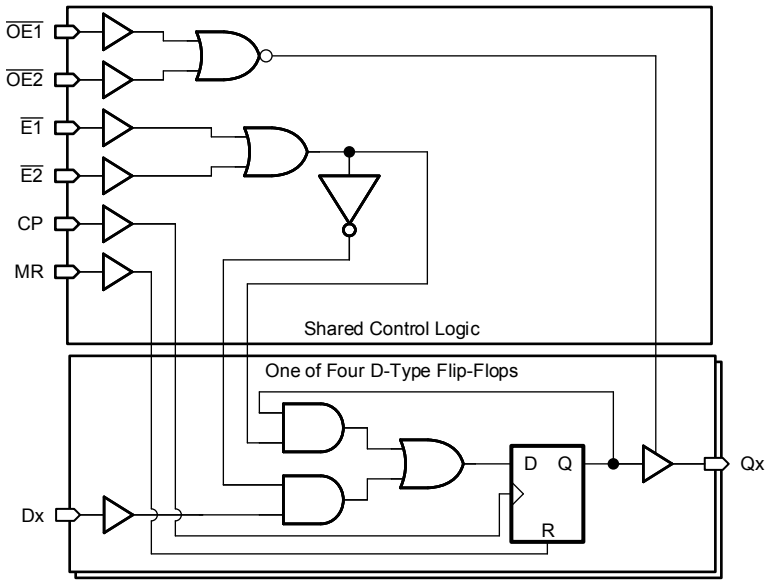

功能方框图

本文档旨在为方便起见，提供有关 TI 产品中文版本的信息，以确认产品的概要。有关适用的官方英文版本的最新信息，请访问 www.ti.com，其内容始终优先。TI 不保证翻译的准确性和有效性。在实际设计之前，请务必参考最新版本的英文版本。

Table of Contents

1 特性.....1
2 说明.....1
3 Revision History.....2
4 Pin Configuration and Functions.....3
5 Specifications.....4
5.1 Absolute Maximum Ratings.....4
5.2 Recommended Operating Conditions.....4
5.3 Thermal Information.....4
5.4 Electrical Characteristics.....5
5.5 Switching Characteristics.....6
5.6 Prerequisite For Switching Characteristics.....7
6 Parameter Measurement Information.....8
7 Detailed Description.....10
7.1 Overview.....10
7.2 Functional Block Diagram.....10
7.3 Device Functional Modes.....11
8 Power Supply Recommendations.....12
9 Layout.....12
9.1 Layout Guidelines.....12
10 Device and Documentation Support.....13
10.1 Documentation Support.....13
10.2 接收文档更新通知.....13
10.3 支持资源.....13
10.4 Trademarks.....13
10.5 Electrostatic Discharge Caution.....13
10.6 术语表.....13
11 Mechanical, Packaging, and Orderable Information.....13

3 Revision History

注：以前版本的页码可能与当前版本的页码不同

Changes from Revision E (October 2003) to Revision F (March 2022)	Page
• 更新了整个文档中的编号、格式、表格、图和交叉参考，以反映现代数据表标准	1

Copyright © 2022 Texas Instruments Incorporated

4 Pin Configuration and Functions

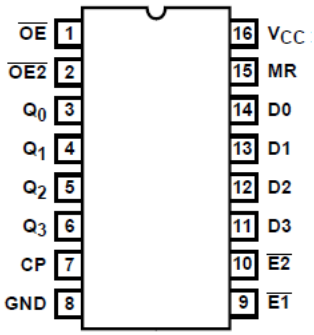

J, N, D, or PW Package
16-Pin CDIP, PDIP, SOIC, or TSSOP
Top View

5 Specifications

5.1 Absolute Maximum Ratings

Over operating free-air temperature range (unless otherwise noted)(1)

			MIN	MAX	UNIT
V_{CC}	Supply voltage		–0.5	7	V
I_{IK}	Input diode current(2)	V_I < –0.5 V or V_I > V_{CC} + 0.5 V		±20	mA
I_{OK}	Output diode current(2)	V_O < –0.5 V or V_O > V_{CC} + 0.5 V		±20	mA
I_O	Output source or sink current per output pin	V_O > –0.5 V or V_O < V_{CC} + 0.5 V		±25	mA
	Continuous current through V_{CC} or GND			±70	mA
T_J	Junction temperature			150	°C
	Lead temperature (soldering 10s) (SOIC - lead tips only)			300	°C
T_{stg}	Storage temperature		–65	150	°C

(1) Stresses beyond those listed under *Absolute Maximum Rating* may cause permanent damage to the device. These are stress ratings only, which do not imply functional operation of the device at these or any other conditions beyond those indicated under *Recommended Operating Condition*. Exposure to absolute-maximum-rated conditions for extended periods may affect device reliability.
(2) The input and output voltage ratings may be exceeded if the input and output current ratings are observed.

5.2 Recommended Operating Conditions

			MIN	MAX	UNIT
V_{CC}	Supply voltage range	HC types	2	6	V
		HCT types	4.5	5.5	
V_I	Input voltage		0	V_{CC}	V
V_O	Output voltage		0	V_{CC}	V
t_t	Input rise and fall time	V_{CC} = 2V		1000	ns
		V_{CC} = 4.5V		500	
		V_{CC} = 6V		400	
T_A	Temperature range		-55	125	°C

5.3 Thermal Information

THERMAL METRIC		N (PDIP) 16 PINS	D (SOIC) 16 PINS	NS (SOP) 16 PINS	PW (TSSOP) 16 PINS	UNIT
$R_{\theta JA}$	Junction-to-ambient thermal resistance(1)	67	73	64	108	°C/W

(1) For more information about traditional and new thermal metrics, see the Semiconductor and IC Package Thermal Metrics application report

Copyright © 2022 Texas Instruments Incorporated

5.4 Electrical Characteristics

PARAMETER		TEST CONDITIONS[1]	V_{CC}	25°C			−40°C to 85°C		−55°C to 125°C		UNIT
				MIN	TYP	MAX	MIN	MAX	MIN	MAX	
HC TYPES											
V_{IH}	High-level input voltage		2	1.5			1.5		1.5		V
			4.5	3.15			3.15		3.15		V
			6	4.2			4.2		4.2		V
V_{IL}	Low-level input voltage		2			0.5		0.5		0.5	V
			4.5			1.35		1.35		1.35	V
			6			1.8		1.8		1.8	V
V_{OH}	High-level output voltage CMOS loads	I_{OH} = − 20 μA	2	1.9			1.9		1.9		V
		I_{OH} = − 20 μA	4.5	4.4			4.4		4.4		V
		I_{OH} = − 20 μA	6	5.9			5.9		5.9		V
	High-level output voltage TTL loads	I_{OH} = − 6mA	4.5	3.98			3.84		3.7		V
		I_{OH} = − 7.8mA	6	5.48			5.34		5.2		V
V_{OL}	Low-level output voltage CMOS loads	I_{OL} = 20 μA	2			0.1		0.1		0.1	V
		I_{OL} = 20 μA	4.5			0.1		0.1		0.1	V
		I_{OL} = 20 μA	6			0.1		0.1		0.1	V
	Low-level output voltage TTL loads	I_{OL} = 6mA	4.5			0.26		0.33		0.4	V
		I_{OL} = 7.8mA	6			0.26		0.33		0.4	V
I_I	Input leakage current	V_{CC} or GND	6			±0.1		±1		±1	μA
I_{CC}	Supply current	V_{CC} or GND	6			8		80		160	μA
I_{OZ}	Three-state leakage current		6			±0.5		±0.5		±10	μA
HCT TYPES											
V_{IH}	High-level input voltage		4.5 to 5.5	2			2		2		V
V_{IL}	Low-level input voltage		4.5 to 5.5			0.8		0.8		0.8	V
V_{OH}	High-level output voltage CMOS loads	I_{OH} = − 20 μA	4.5	4.4			4.4		4.4		V
	High-level output voltage TTL loads	I_{OH} = − 6mA	4.5	3.98			3.84		3.7		V
V_{OL}	Low-level output voltage CMOS loads	I_{OL} = 20 μA	4.5			0.1		0.1		0.1	V
	Low-level output voltage TTL loads	I_{OL} = 6mA	4.5			0.26		0.33		0.4	V
I_I	Input leakage current	V_{CC} and GND	5.5			±0.1		±1		±1	μA
I_{CC}	Supply Current	V_{CC} and GND	5.5			8		80		160	μA
ΔI_{CC} [2] [3]	Additional supply current per input pin	One of D0-D3	4.5 to 5.5		15	54		67.5		73.5	μA
		One of $\overline{E1}$ and $\overline{E2}$	4.5 to 5.5		15	54		67.5		73.5	μA
		CP	4.5 to 5.5		25	90		112.5		122.5	μA
		MR	4.5 to 5.5		20	72		90		98	μA
		One of $\overline{OE1}$ and $\overline{OE2}$	4.5 to 5.5		50	180		225		245	μA

Copyright © 2022 Texas Instruments Incorporated

PARAMETER		TEST CONDITIONS(1)	V_{CC}	25°C			−40°C to 85°C		−55°C to 125°C		UNIT
				MIN	TYP	MAX	MIN	MAX	MIN	MAX	
I_{OZ}	Three-state leakage current		5.5			±0.5		±5.0		±10	μA

(1) $V_I = V_{IH}$ or V_{IL}, unless otherwise noted.
(2) For dual-supply systems theoretical worst case (V_I = 2.4 V, V_{CC} = 5.5 V) specification is 1.8 mA.
(3) Inputs held at V_{CC} – 2.1.

5.5 Switching Characteristics

Input t_t = 6ns. Unless otherwise specified, C_L = 50pF

PARAMETER		V_{CC}(V)	25°C		-40°C to 85°C	-55°C to 125°C	UNIT
			TYP	MAX	MAX	MAX	
HC TYPES							
t_{pd}	Propagation delay, clock to output	2		200	250	300	ns
		4.5	17(1)	40	50	60	
		6		34	43	51	
t_{pd}	Propagation delay, MR to output	2		175	220	265	ns
		4.5	12(1)	35	44	53	
		6		30	37	45	
t_{pd}	Propagation delay output enable to Q (Figure 6)	2		150	190	225	ns
		4.5	12(1)	30	38	45	
		6		26	33	38	
t_t	Output transition times	2		60	75	90	ns
		4.5		12	15	18	
		6		10	13	15	
f_{MAX}	Maximum clock frequency	5	60(1)				MHz
C_i	Input capacitance			10	10	10	pF
C_O	Three-state output capacitance			10	10	10	pF
C_{pd} (2) (3)	Power dissipation capacitance	5	29				pF
HCT TYPES							
t_{pd}	Propagation delay, clock to output	4.5	17(1)	40	50	60	ns
t_{pd}	Propagation delay, MR to output	4.5	18(1)	44	55	66	ns
t_{pd}	Propagation delay output enable to Q (Figure 6)	2		150	190	225	ns
		4.5	14(1)	30	38	45	
		6		26	33	38	
t_t	Output transition times	4.5		15	19	22	ns
f_{MAX}	Maximum clock frequency	5	60(1)				MHz
C_i	Input capacitance			10	10	10	pF
C_{pd} (2) (3)	Power dissipation capacitance	5	34				pF

(1) Typical value tested at 5V, C_L = 15pF.
(2) C_{PD} is used to determine th edynamic power consumption, per package.
(3) $P_D = V_{CC}{}^2 f_i + \Sigma\ (C_L\ V_{CC}{}^2 + f_O)$ where f_i = Input Frequency, C_L = Output Load Capacitance, V_{CC} = Supply Voltage.

Copyright © 2022 Texas Instruments Incorporated

5.6 Prerequisite For Switching Characteristics

PARAMETER		V_{CC}(V)	25°C		-40°C to 85°C		-55°C to 125°C		UNITS
			MIN	MAX	MIN	MAX	MIN	MAX	
HC TYPES									
f_{MAX}	Maximum clock frequency	2	6		5		4		MHz
		4.5	30		24		20		
		6	35		28		24		
t_W	MR pulse width	2	80		100		120		ns
		4.5	16		20		24		
		6	14		17		20		
t_W	Clock pulse width	2	80		100		120		ns
		4.5	16		20		24		
		6	14		17		20		
t_{SU}	Set-up time, data to clock and $\overline{E}$ to clock	2	60		75		90		ns
		4.5	12		15		18		
		6	10		13		15		
t_H	Hold time, data to clock	2	3		3		3		ns
		4.5	3		3		3		
		6	3		3		3		
t_H	Hold time, $\overline{E}$ to clock	2	0		0		0		ns
		4.5	0		0		0		
		6	0		0		0		
t_{REM}	Removal time, MR to clock	2	60		75		90		ns
		4.5	12		15		18		
		6	10		13		15		
HCT TYPES									
f_{MAX}	Maximum clock frequency	4.5	20		16		13		MHz
$t_W t_W$	MR pulse width	4.5	15		19		22		ns
t_W	Clock pulse width	4.5	25		31		38		ns
t_{SU}	Set-up Time, $\overline{E}$ to clock	4.5	12		15		18		ns
t_{SU}	Set-up time, data to clock	4.5	18		23		27		ns
t_H	Hold time, data to clock	4.5	0		0		0		ns
t_H	Hold time, $\overline{E}$ to clock	4.5	0		0		0		ns
t_{REM}	Removal time, MR to clock	4.5	12		15		18		ns

Copyright © 2022 Texas Instruments Incorporated

6 Parameter Measurement Information

t_{PD} is the maximum between t_{PLH} and t_{PHL}

t_t is the maximum between t_{TLH} and t_{THL}

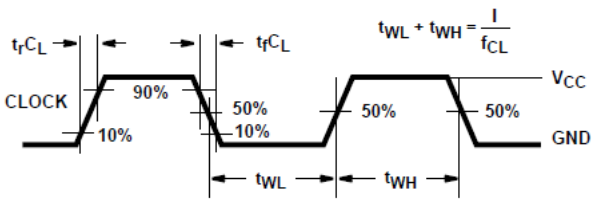

NOTE: Outputs should be switching from 10% V_{CC} to 90% V_{CC} in accordance with device truth table. For f_{MAX}, input duty cycle = 50%

图 6-1. HC clock pulse rise and fall times and pulse width

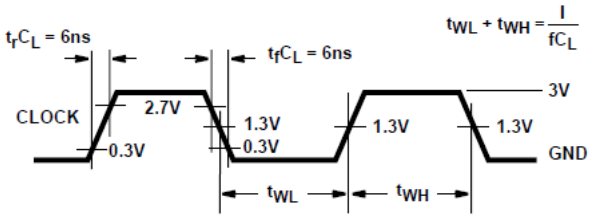

NOTE: Outputs should be switching from 10% V_{CC} to 90% V_{CC} in accordance with device truth table. FOr f_{MAX}, input duty cycle = 50%

图 6-2. HCT clock pulse rise and fall times and pulse width

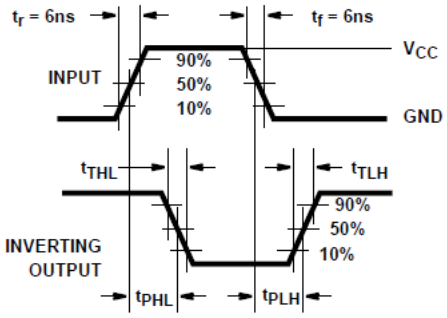

图 6-3. HC and HCU transition times and propagation delay times, combination logic

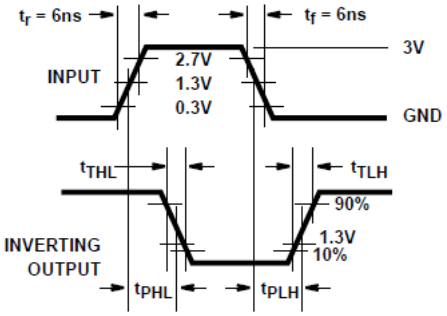

图 6-4. HCT transition times and propagation delay times, combination logic

Copyright © 2022 Texas Instruments Incorporated

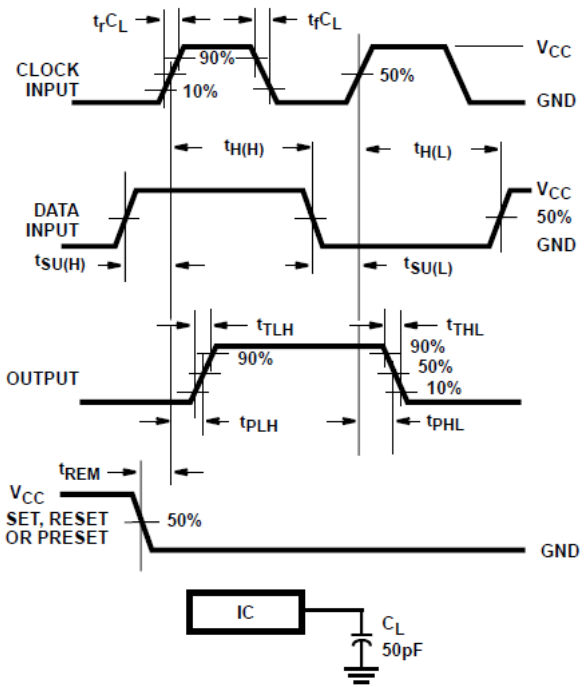

图 6-5. HC setup times, hold times, removal time, and propagation delay times for edge triggered sequential logic circuits

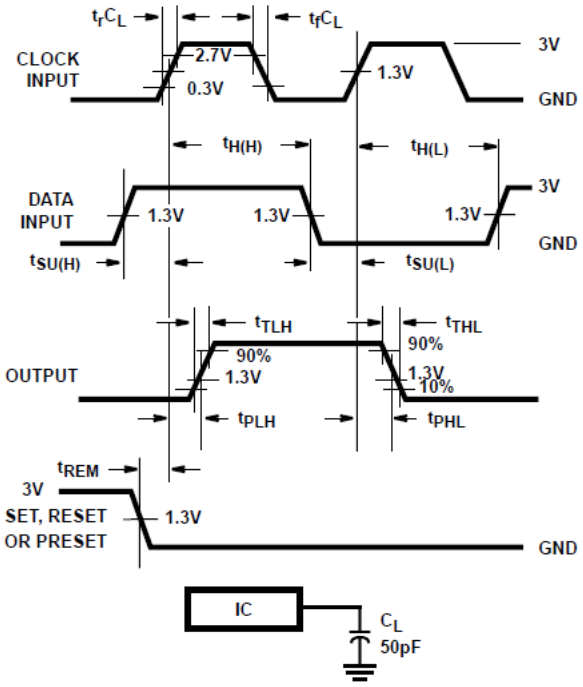

图 6-6. HCT setup times, hold times, removal time, and propagation delay times for edge triggered sequential logic circuits

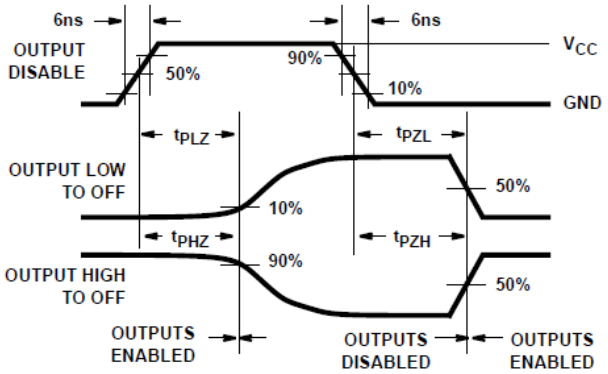

图 6-7. HC three-state propagation delay waveform

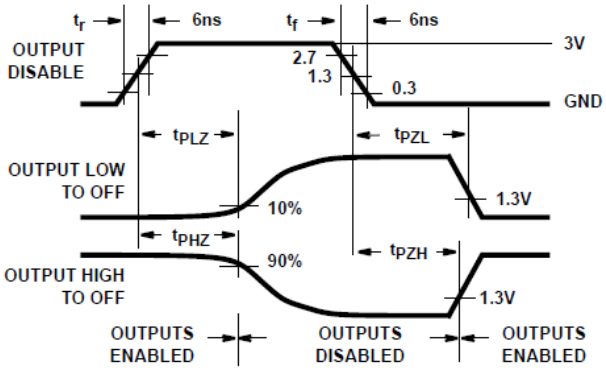

图 6-8. HCT three-state propagation delay waveform

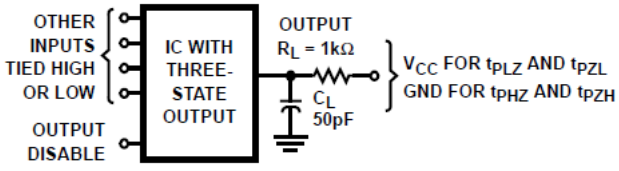

NOTE: Opend drain waveforms t_{PLZ} and t_{PZL} are the same as those for three-state shown on the left. The test circuit is Output R_L = 1kΩ to V_{CC}, C_L = 50pF

图 6-9. HC and HCT three-state propagation delay test circuit

7 Detailed Description

7.1 Overview

The CDx4HC173 or CDx4HCT173 high speed three-state quad Dtype flip-flops are fabricated with silicon gate CMOS technology. They possess the low power consumption of standard CMOS Integrated circuits, and can operate at speeds comparable to the equivalent low power Schottky devices. The buffered outputs can drive 15 LSTTL loads. The large output drive capability and three-state feature make these parts ideally suited for interfacing with bus lines in bus oriented systems

The four D-type flip-flops operate synchronously from a common clock. The outputs are in the three-state mode when either of the two output disable pins are at the logic “1” level. The input ENABLES allow the flip-flops to remain in their present states without having to disrupt the clock If either of the 2 input ENABLES are taken to a logic “1” level, the Q outputs are fed back to the inputs, forcing the flip-flops to remain in the same state. Reset is enabled by taking the RESET (MR) input to a logic “1” level. The data outputs change state on the positive going edge of the clock.

The ’ HCT173 logic family is functionally, as well as pin compatible with the standard LS logic family.

7.2 Functional Block Diagram

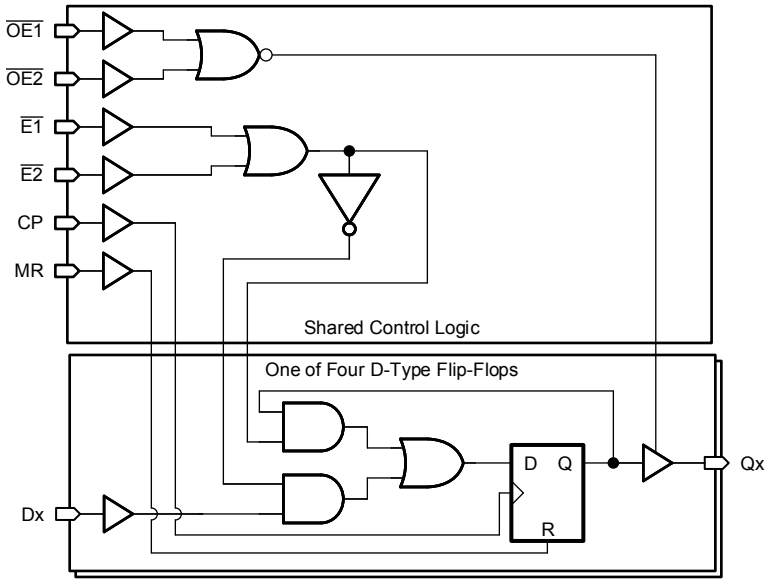

Copyright © 2022 Texas Instruments Incorporated

7.3 Device Functional Modes

表 7-1. Truth Table[1][2]

INPUTS				DATA	OUTPUT
MR	CP	DATA ENABLE			
		$\overline{E1}$	$\overline{E2}$	D	Q_n
H	X	X	X	X	L
L	L	X	X	X	Q_0
L	↑	H	X	X	Q_0
L	↑	X	H	X	Q_0
L	↑	L	L	L	L
L	↑	L	L	H	H

(1) H = High voltage level. L = Low voltage level. X = Irrelevant. ↑ = Transition from low to high level. Q_0 = Level before the indicated steady-state input conditions were established.
(2) When either OE1 or OE2 (or both) is (are) high, the output is disabled to the high-impedance stat, however, sequential operation of the flip-flops is not affected.

Copyright © 2022 Texas Instruments Incorporated

8 Power Supply Recommendations

The power supply can be any voltage between the minimum and maximum supply voltage rating located in the *Recommended Operating Conditions*. Each V_{CC} terminal should have a good bypass capacitor to prevent power disturbance. A 0.1-μF capacitor is recommended for this device. It is acceptable to parallel multiple bypass caps to reject different frequencies of noise. The 0.1-μF and 1-μF capacitors are commonly used in parallel. The bypass capacitor should be installed as close to the power terminal as possible for best results.

9 Layout

9.1 Layout Guidelines

When using multiple-input and multiple-channel logic devices inputs must not ever be left floating. In many cases, functions or parts of functions of digital logic devices are unused; for example, when only two inputs of a triple-input AND gate are used or only 3 of the 4 buffer gates are used. Such unused input pins must not be left unconnected because the undefined voltages at the outside connections result in undefined operational states. All unused inputs of digital logic devices must be connected to a logic high or logic low voltage, as defined by the input voltage specifications, to prevent them from floating. The logic level that must be applied to any particular unused input depends on the function of the device. Generally, the inputs are tied to GND or V_{CC}, whichever makes more sense for the logic function or is more convenient.

Copyright © 2022 Texas Instruments Incorporated

10 Device and Documentation Support

TI offers an extensive line of development tools. Tools and software to evaluate the performance of the device, generate code, and develop solutions are listed below.

10.1 Documentation Support

10.1.1 Related Documentation

10.2 接收文档更新通知

要接收文档更新通知，请导航至 ti.com 上的器件产品文件夹。点击 *订阅更新* 进行注册，即可每周接收产品信息更改摘要。有关更改的详细信息，请查看任何已修订文档中包含的修订历史记录。

10.3 支持资源

TI E2E™ 支持论坛是工程师的重要参考资料，可直接从专家获得快速、经过验证的解答和设计帮助。搜索现有解答或提出自己的问题可获得所需的快速设计帮助。

链接的内容由各个贡献者“按原样”提供。这些内容并不构成 TI 技术规范，并且不一定反映 TI 的观点；请参阅 TI 的《使用条款》。

10.4 Trademarks

TI E2E™ is a trademark of Texas Instruments.
所有商标均为其各自所有者的财产。

10.5 Electrostatic Discharge Caution



This integrated circuit can be damaged by ESD. Texas Instruments recommends that all integrated circuits be handled with appropriate precautions. Failure to observe proper handling and installation procedures can cause damage.

ESD damage can range from subtle performance degradation to complete device failure. Precision integrated circuits may be more susceptible to damage because very small parametric changes could cause the device not to meet its published specifications.

10.6 术语表

TI 术语表	本术语表列出并解释了术语、首字母缩略词和定义。

11 Mechanical, Packaging, and Orderable Information

The following pages include mechanical, packaging, and orderable information. This information is the most current data available for the designated devices. This data is subject to change without notice and revision of this document. For browser-based versions of this data sheet, refer to the left-hand navigation.

Copyright © 2022 Texas Instruments Incorporated

重要声明和免责声明

TI 提供技术和可靠性数据（包括数据表）、设计资源（包括参考设计）、应用或其他设计建议、网络工具、安全信息和其他资源，不保证没有瑕疵且不做出任何明示或暗示的担保，包括但不限于对适销性、某特定用途方面的适用性或不侵犯任何第三方知识产权的暗示担保。

这些资源可供使用 TI 产品进行设计的熟练开发人员使用。您将自行承担以下全部责任：(1) 针对您的应用选择合适的 TI 产品，(2) 设计、验证并测试您的应用，(3) 确保您的应用满足相应标准以及任何其他安全、安保或其他要求。这些资源如有变更，恕不另行通知。TI 授权您仅可将这些资源用于研发本资源所述的 TI 产品的应用。严禁对这些资源进行其他复制或展示。您无权使用任何其他 TI 知识产权或任何第三方知识产权。您应全额赔偿因在这些资源的使用中对 TI 及其代表造成的任何索赔、损害、成本、损失和债务，TI 对此概不负责。

TI 提供的产品受 TI 的销售条款 (https:www.ti.com/legal/termsofsale.html) 或 ti.com 上其他适用条款/TI 产品随附的其他适用条款的约束。TI 提供这些资源并不会扩展或以其他方式更改 TI 针对 TI 产品发布的适用的担保或担保免责声明。

邮寄地址：Texas Instruments, Post Office Box 655303, Dallas, Texas 75265
Copyright © 2021，德州仪器 (TI) 公司

PACKAGING INFORMATION

Orderable Device	Status (1)	Package Type	Package Drawing	Pins	Package Qty	Eco Plan (2)	Lead finish/ Ball material (6)	MSL Peak Temp (3)	Op Temp (°C)	Device Marking (4/5)	Samples
5962-8682501EA	ACTIVE	CDIP	J	16	1	Non-RoHS & Green	SNPB	N / A for Pkg Type	-55 to 125	5962-8682501EA CD54HC173F3A	Samples
5962-8875901EA	ACTIVE	CDIP	J	16	1	Non-RoHS & Green	SNPB	N / A for Pkg Type	-55 to 125	5962-8875901EA CD54HCT173F3A	Samples
CD54HC173F	ACTIVE	CDIP	J	16	1	Non-RoHS & Green	SNPB	N / A for Pkg Type	-55 to 125	CD54HC173F	Samples
CD54HC173F3A	ACTIVE	CDIP	J	16	1	Non-RoHS & Green	SNPB	N / A for Pkg Type	-55 to 125	5962-8682501EA CD54HC173F3A	Samples
CD54HCT173F3A	ACTIVE	CDIP	J	16	1	Non-RoHS & Green	SNPB	N / A for Pkg Type	-55 to 125	5962-8875901EA CD54HCT173F3A	Samples
CD74HC173E	ACTIVE	PDIP	N	16	25	RoHS & Green	NIPDAU	N / A for Pkg Type	-55 to 125	CD74HC173E	Samples
CD74HC173M	ACTIVE	SOIC	D	16	40	RoHS & Green	NIPDAU	Level-1-260C-UNLIM	-55 to 125	HC173M	Samples
CD74HC173M96	ACTIVE	SOIC	D	16	2500	RoHS & Green	NIPDAU	Level-1-260C-UNLIM	-55 to 125	HC173M	Samples
CD74HC173M96G4	ACTIVE	SOIC	D	16	2500	TBD	Call TI	Call TI	-55 to 125		Samples
CD74HC173MG4	ACTIVE	SOIC	D	16	40	TBD	Call TI	Call TI	-55 to 125		Samples
CD74HC173PW	ACTIVE	TSSOP	PW	16	90	RoHS & Green	NIPDAU	Level-1-260C-UNLIM	-55 to 125	HJ173	Samples
CD74HC173PWR	ACTIVE	TSSOP	PW	16	2000	RoHS & Green	NIPDAU	Level-1-260C-UNLIM	-55 to 125	HJ173	Samples
CD74HCT173E	ACTIVE	PDIP	N	16	25	RoHS & Green	NIPDAU	N / A for Pkg Type	-55 to 125	CD74HCT173E	Samples
CD74HCT173M	ACTIVE	SOIC	D	16	40	RoHS & Green	NIPDAU	Level-1-260C-UNLIM	-55 to 125	HCT173M	Samples
CD74HCT173M96	ACTIVE	SOIC	D	16	2500	RoHS & Green	NIPDAU	Level-1-260C-UNLIM	-55 to 125	HCT173M	Samples
CD74HCT173MG4	ACTIVE	SOIC	D	16	40	TBD	Call TI	Call TI	-55 to 125		Samples

(1) The marketing status values are defined as follows:
ACTIVE: Product device recommended for new designs.
LIFEBUY: TI has announced that the device will be discontinued, and a lifetime-buy period is in effect.
NRND: Not recommended for new designs. Device is in production to support existing customers, but TI does not recommend using this part in a new design.
PREVIEW: Device has been announced but is not in production. Samples may or may not be available.

OBSOLETE: TI has discontinued the production of the device.

(2) **RoHS:** TI defines "RoHS" to mean semiconductor products that are compliant with the current EU RoHS requirements for all 10 RoHS substances, including the requirement that RoHS substance do not exceed 0.1% by weight in homogeneous materials. Where designed to be soldered at high temperatures, "RoHS" products are suitable for use in specified lead-free processes. TI may reference these types of products as "Pb-Free".
RoHS Exempt: TI defines "RoHS Exempt" to mean products that contain lead but are compliant with EU RoHS pursuant to a specific EU RoHS exemption.
Green: TI defines "Green" to mean the content of Chlorine (Cl) and Bromine (Br) based flame retardants meet JS709B low halogen requirements of <=1000ppm threshold. Antimony trioxide based flame retardants must also meet the <=1000ppm threshold requirement.

(3) MSL, Peak Temp. - The Moisture Sensitivity Level rating according to the JEDEC industry standard classifications, and peak solder temperature.

(4) There may be additional marking, which relates to the logo, the lot trace code information, or the environmental category on the device.

(5) Multiple Device Markings will be inside parentheses. Only one Device Marking contained in parentheses and separated by a "~" will appear on a device. If a line is indented then it is a continuation of the previous line and the two combined represent the entire Device Marking for that device.

(6) Lead finish/Ball material - Orderable Devices may have multiple material finish options. Finish options are separated by a vertical ruled line. Lead finish/Ball material values may wrap to two lines if the finish value exceeds the maximum column width.

Important Information and Disclaimer: The information provided on this page represents TI's knowledge and belief as of the date that it is provided. TI bases its knowledge and belief on information provided by third parties, and makes no representation or warranty as to the accuracy of such information. Efforts are underway to better integrate information from third parties. TI has taken and continues to take reasonable steps to provide representative and accurate information but may not have conducted destructive testing or chemical analysis on incoming materials and chemicals. TI and TI suppliers consider certain information to be proprietary, and thus CAS numbers and other limited information may not be available for release.

In no event shall TI's liability arising out of such information exceed the total purchase price of the TI part(s) at issue in this document sold by TI to Customer on an annual basis.

OTHER QUALIFIED VERSIONS OF CD54HC173, CD54HCT173, CD74HC173, CD74HCT173 :

- Catalog : CD74HC173, CD74HCT173
- Military : CD54HC173, CD54HCT173

NOTE: Qualified Version Definitions:

- Catalog - TI's standard catalog product
- Military - QML certified for Military and Defense Applications

TAPE AND REEL INFORMATION

REEL DIMENSIONS

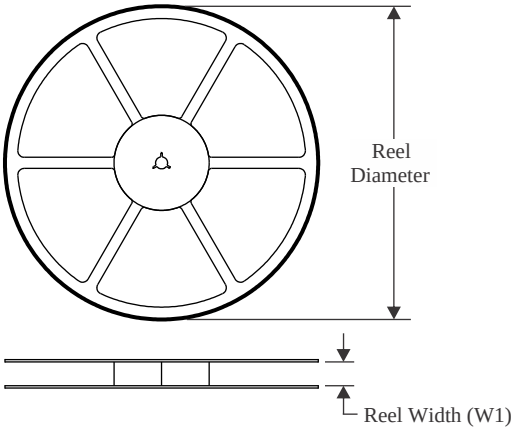

TAPE DIMENSIONS

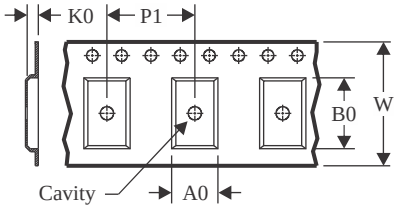

A0	Dimension designed to accommodate the component width
B0	Dimension designed to accommodate the component length
K0	Dimension designed to accommodate the component thickness
W	Overall width of the carrier tape
P1	Pitch between successive cavity centers

QUADRANT ASSIGNMENTS FOR PIN 1 ORIENTATION IN TAPE

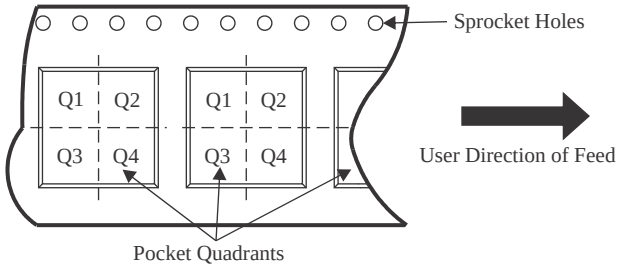

*All dimensions are nominal

Device	Package Type	Package Drawing	Pins	SPQ	Reel Diameter (mm)	Reel Width W1 (mm)	A0 (mm)	B0 (mm)	K0 (mm)	P1 (mm)	W (mm)	Pin1 Quadrant
CD74HC173M96	SOIC	D	16	2500	330.0	16.4	6.5	10.3	2.1	8.0	16.0	Q1
CD74HC173PWR	TSSOP	PW	16	2000	330.0	12.4	6.9	5.6	1.6	8.0	12.0	Q1
CD74HCT173M96	SOIC	D	16	2500	330.0	16.4	6.5	10.3	2.1	8.0	16.0	Q1

TAPE AND REEL BOX DIMENSIONS

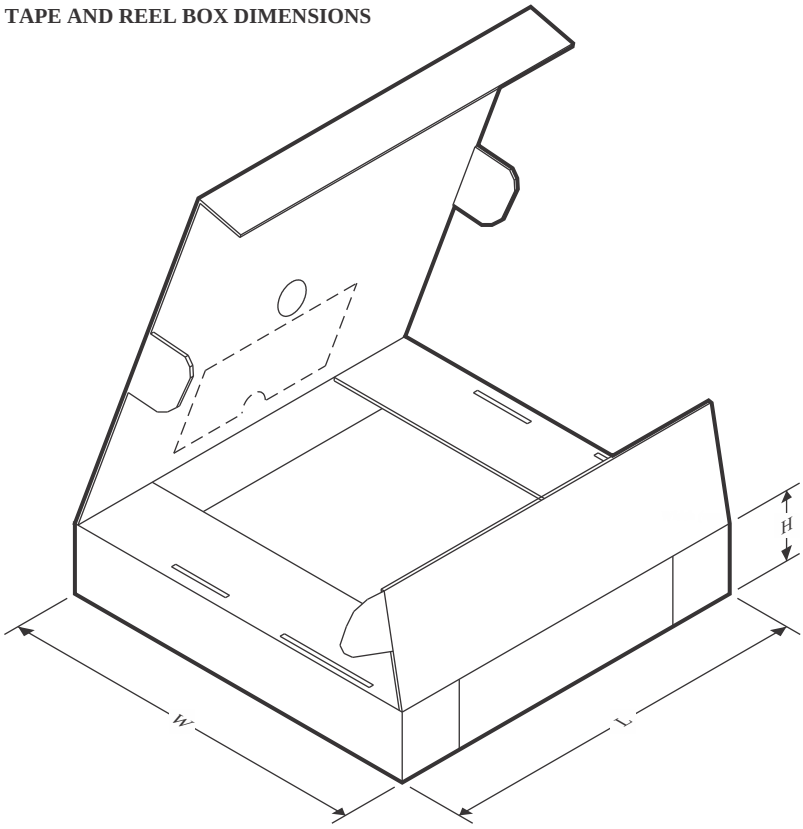

*All dimensions are nominal

Device	Package Type	Package Drawing	Pins	SPQ	Length (mm)	Width (mm)	Height (mm)
CD74HC173M96	SOIC	D	16	2500	340.5	336.1	32.0
CD74HC173PWR	TSSOP	PW	16	2000	356.0	356.0	35.0
CD74HCT173M96	SOIC	D	16	2500	340.5	336.1	32.0

TUBE

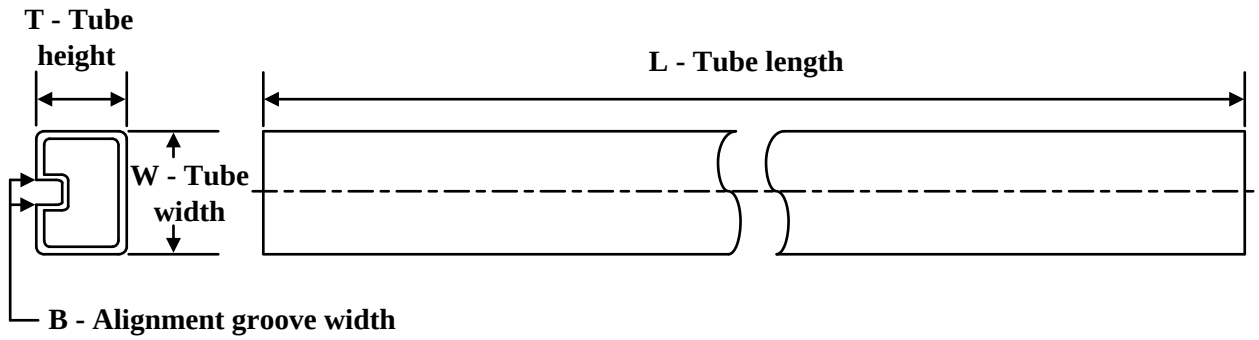

*All dimensions are nominal

Device	Package Name	Package Type	Pins	SPQ	L (mm)	W (mm)	T (µm)	B (mm)
CD74HC173E	N	PDIP	16	25	506	13.97	11230	4.32
CD74HC173E	N	PDIP	16	25	506	13.97	11230	4.32
CD74HC173M	D	SOIC	16	40	507	8	3940	4.32
CD74HC173PW	PW	TSSOP	16	90	530	10.2	3600	3.5
CD74HCT173E	N	PDIP	16	25	506	13.97	11230	4.32
CD74HCT173E	N	PDIP	16	25	506	13.97	11230	4.32
CD74HCT173M	D	SOIC	16	40	507	8	3940	4.32

D (R–PDSO–G16) PLASTIC SMALL OUTLINE

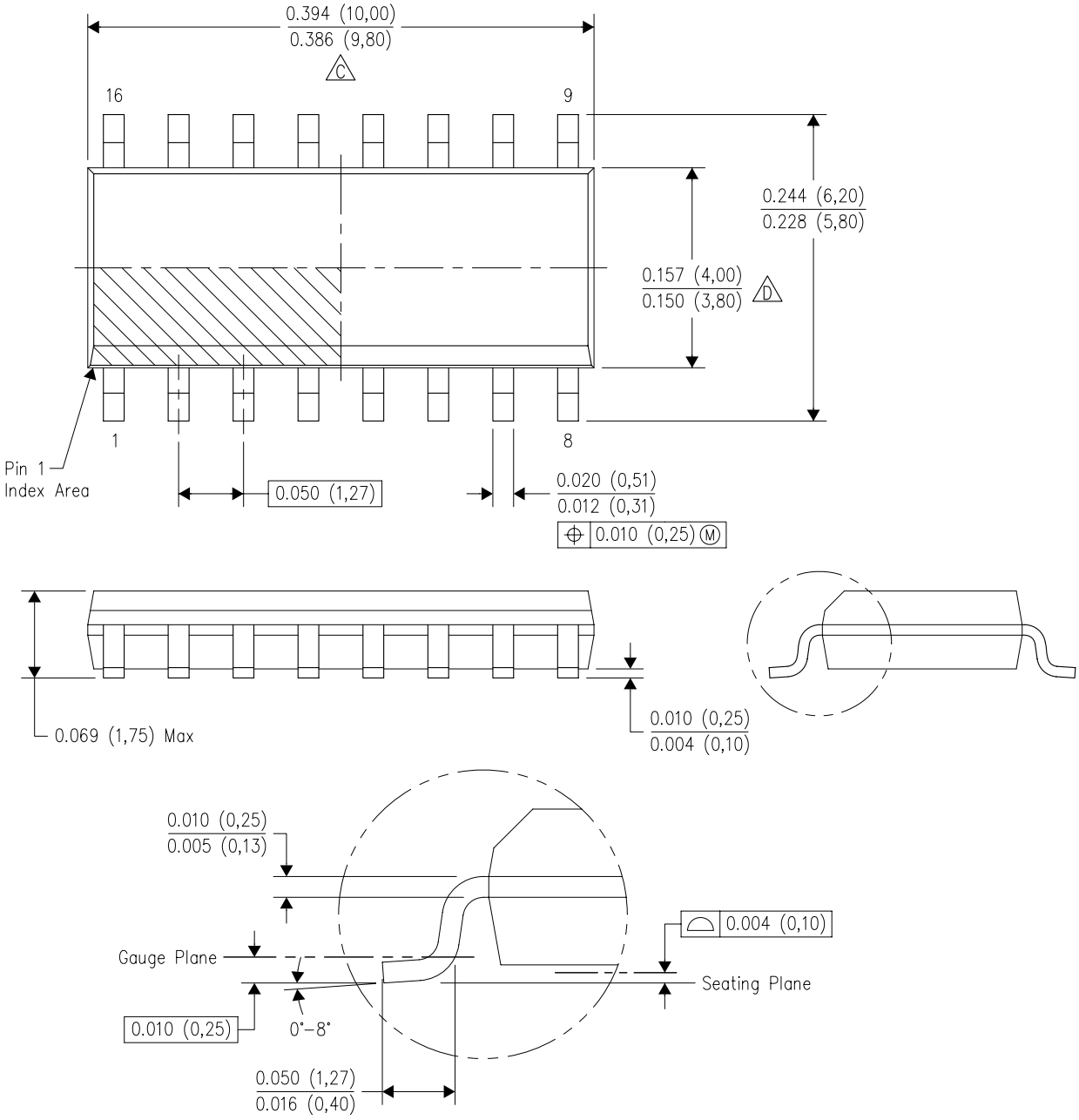

NOTES:
A. All linear dimensions are in inches (millimeters).
B. This drawing is subject to change without notice.
C. Body length does not include mold flash, protrusions, or gate burrs. Mold flash, protrusions, or gate burrs shall not exceed 0.006 (0,15) each side.
D. Body width does not include interlead flash. Interlead flash shall not exceed 0.017 (0,43) each side.
E. Reference JEDEC MS–012 variation AC.

D (R–PDSO–G16) PLASTIC SMALL OUTLINE

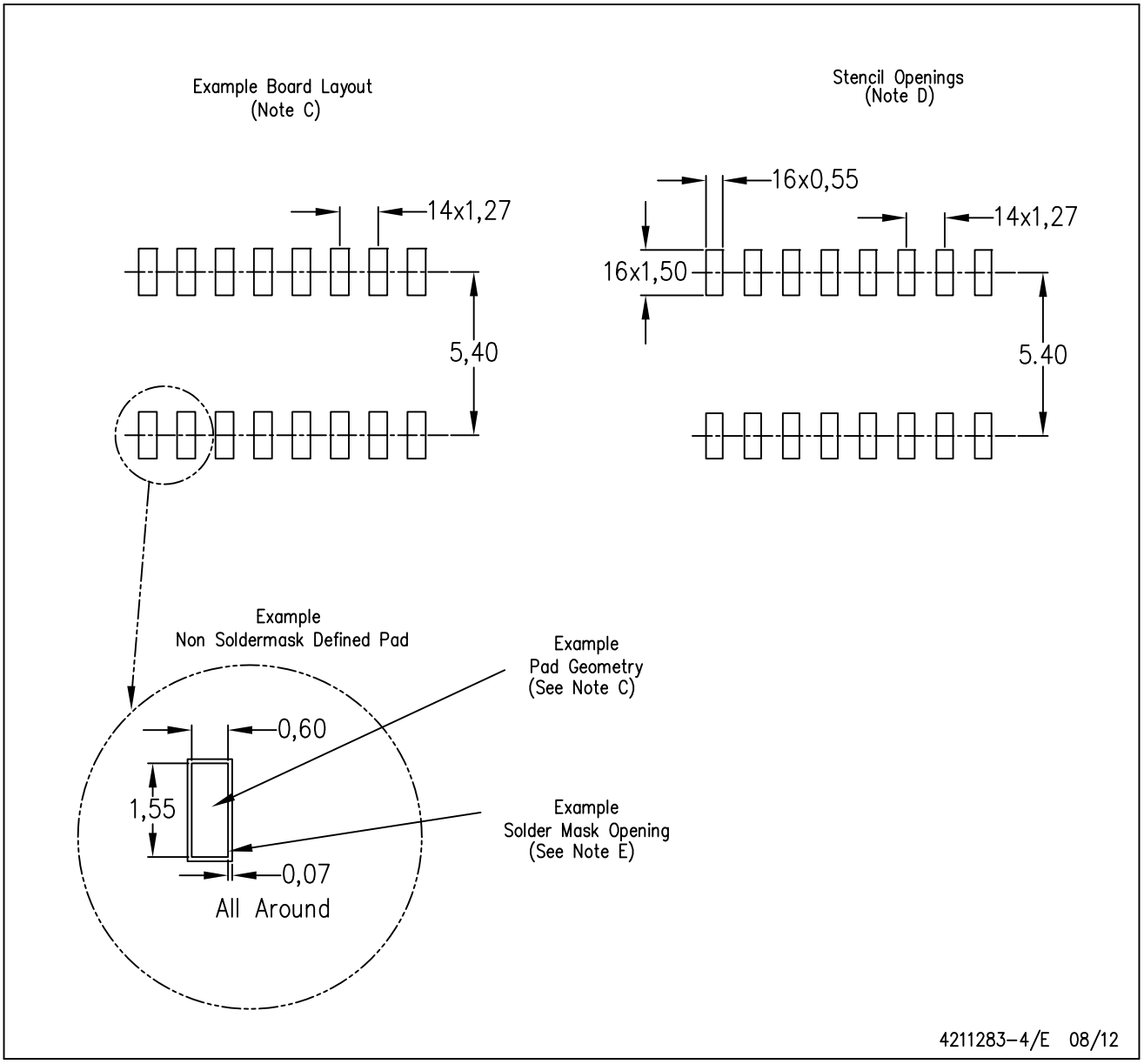

NOTES:
A. All linear dimensions are in millimeters.
B. This drawing is subject to change without notice.
C. Publication IPC–7351 is recommended for alternate designs.
D. Laser cutting apertures with trapezoidal walls and also rounding corners will offer better paste release. Customers should contact their board assembly site for stencil design recommendations. Refer to IPC–7525 for other stencil recommendations.
E. Customers should contact their board fabrication site for solder mask tolerances between and around signal pads.

PACKAGE OUTLINE

PW0016A

TSSOP - 1.2 mm max height

SMALL OUTLINE PACKAGE

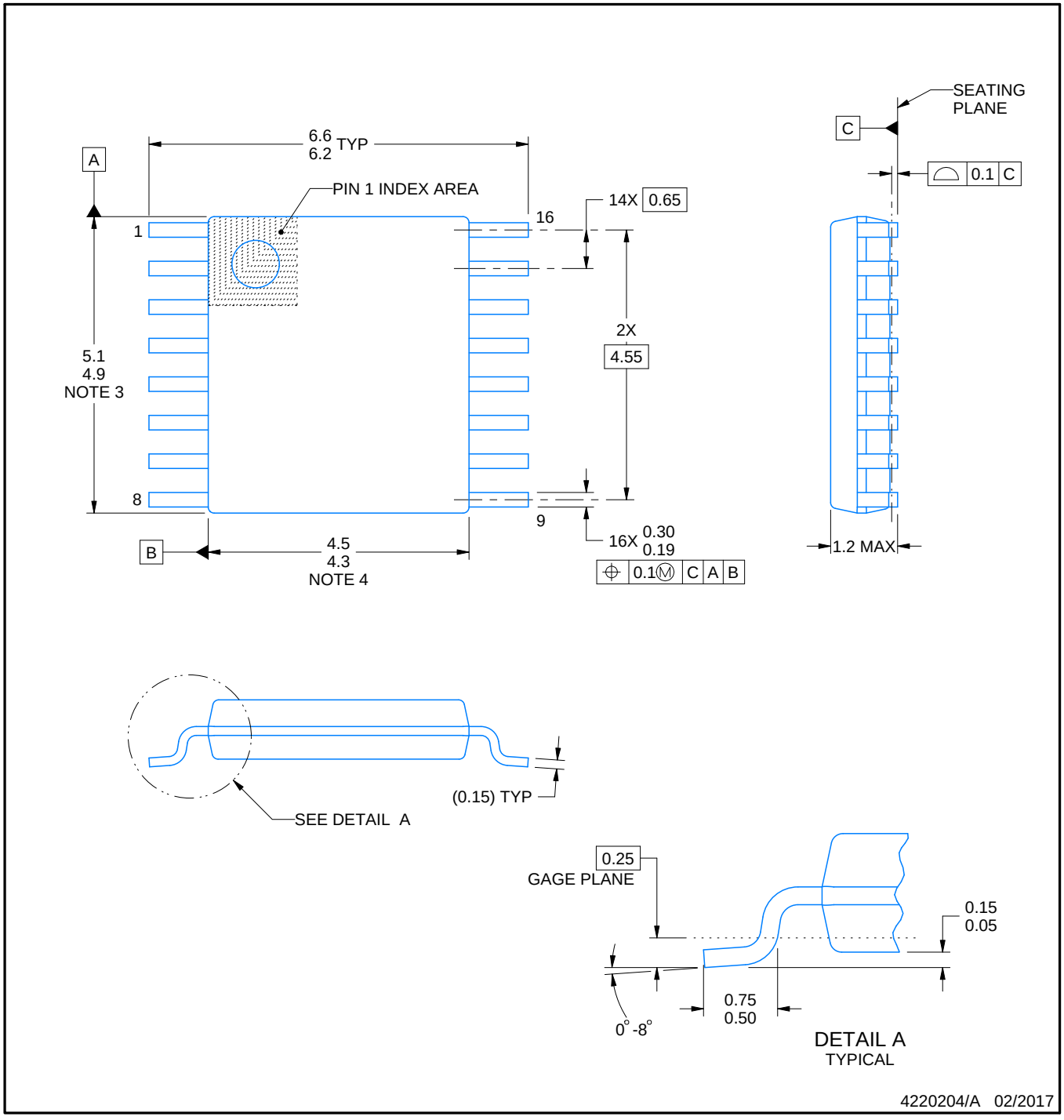

NOTES:

1. All linear dimensions are in millimeters. Any dimensions in parenthesis are for reference only. Dimensioning and tolerancing per ASME Y14.5M.
2. This drawing is subject to change without notice.
3. This dimension does not include mold flash, protrusions, or gate burrs. Mold flash, protrusions, or gate burrs shall not exceed 0.15 mm per side.
4. This dimension does not include interlead flash. Interlead flash shall not exceed 0.25 mm per side.
5. Reference JEDEC registration MO-153.

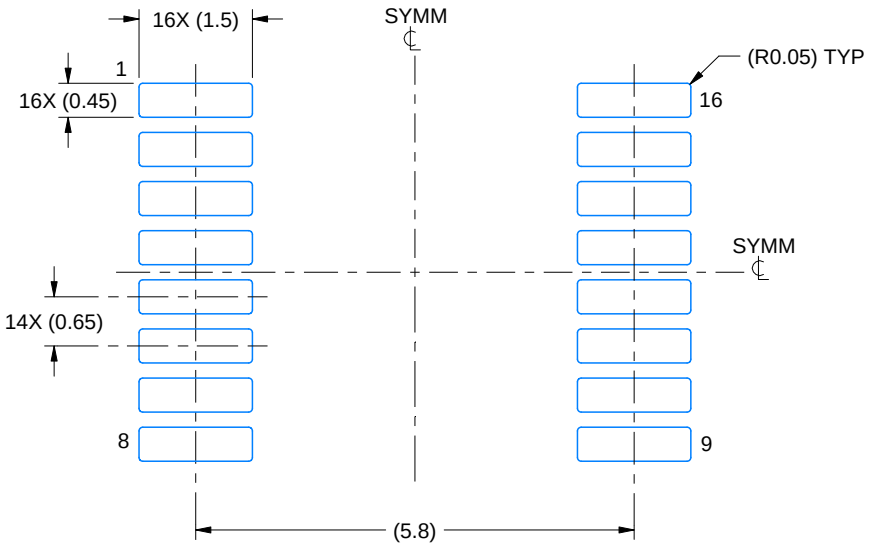

LAND PATTERN EXAMPLE
EXPOSED METAL SHOWN
SCALE: 10X

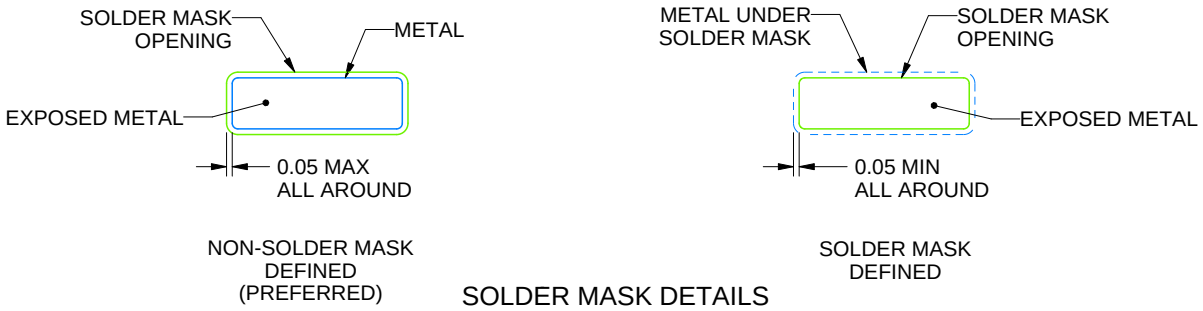

SOLDER MASK DETAILS

4220204/A 02/2017

NOTES: (continued)

6. Publication IPC-7351 may have alternate designs.
7. Solder mask tolerances between and around signal pads can vary based on board fabrication site.

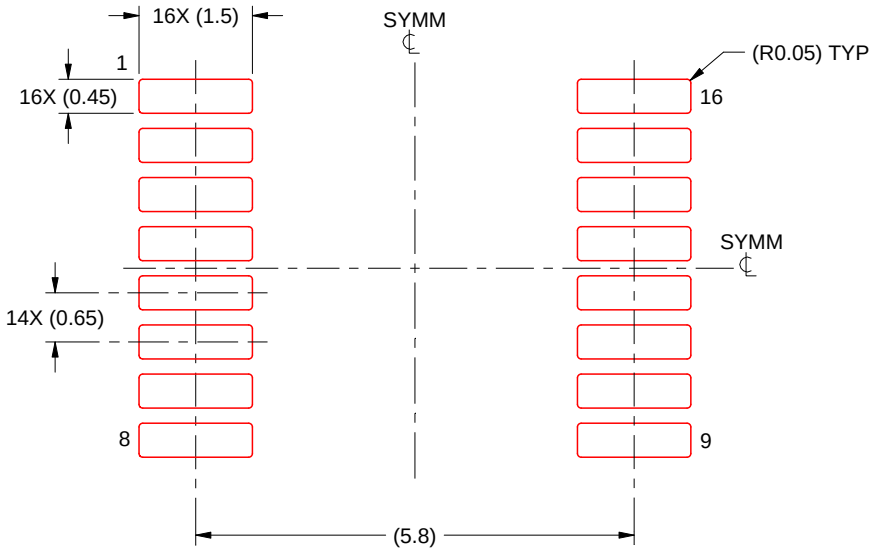

SOLDER PASTE EXAMPLE
BASED ON 0.125 mm THICK STENCIL
SCALE: 10X

4220204/A 02/2017

NOTES: (continued)

8. Laser cutting apertures with trapezoidal walls and rounded corners may offer better paste release. IPC-7525 may have alternate design recommendations.
9. Board assembly site may have different recommendations for stencil design.

J (R–GDIP–T**)

14 LEADS SHOWN

CERAMIC DUAL IN–LINE PACKAGE

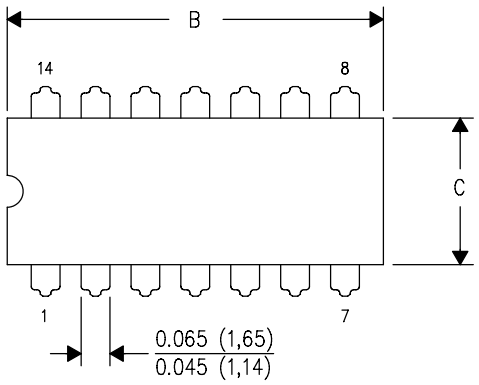

DIM \ PINS **	14	16	18	20
A	0.300 (7,62) BSC	0.300 (7,62) BSC	0.300 (7,62) BSC	0.300 (7,62) BSC
B MAX	0.785 (19,94)	.840 (21,34)	0.960 (24,38)	1.060 (26,92)
B MIN	—	—	—	—
C MAX	0.300 (7,62)	0.300 (7,62)	0.310 (7,87)	0.300 (7,62)
C MIN	0.245 (6,22)	0.245 (6,22)	0.220 (5,59)	0.245 (6,22)

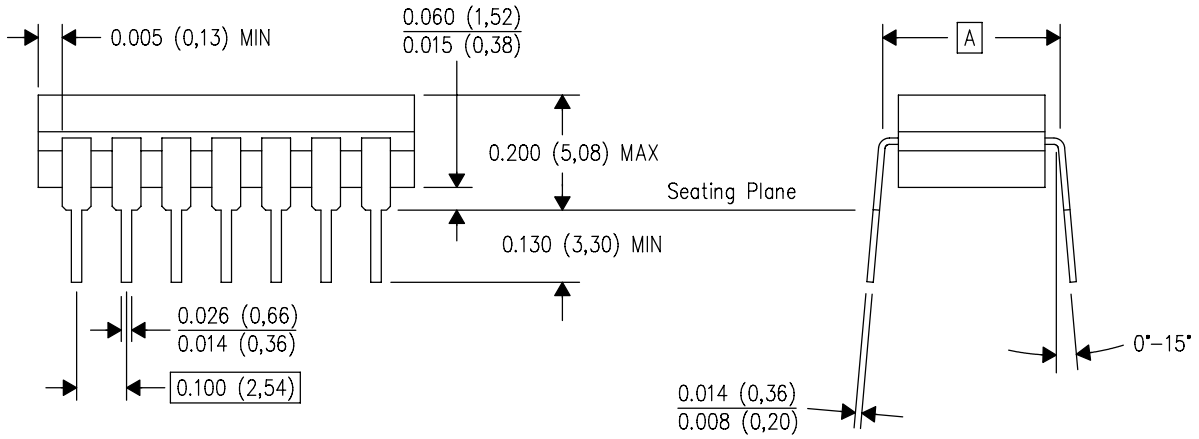

4040083/F 03/03

NOTES:
A. All linear dimensions are in inches (millimeters).
B. This drawing is subject to change without notice.
C. This package is hermetically sealed with a ceramic lid using glass frit.
D. Index point is provided on cap for terminal identification only on press ceramic glass frit seal only.
E. Falls within MIL STD 1835 GDIP1–T14, GDIP1–T16, GDIP1–T18 and GDIP1–T20.

N (R–PDIP–T**)

PLASTIC DUAL–IN–LINE PACKAGE

16 PINS SHOWN

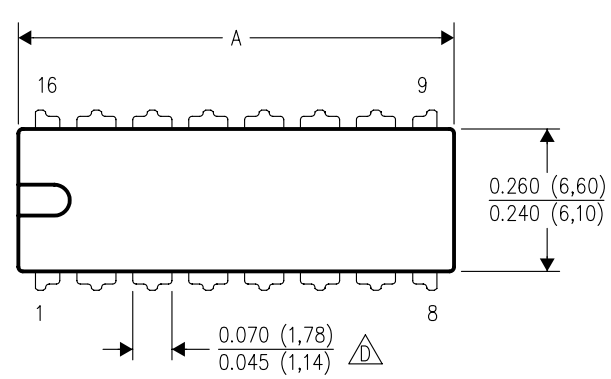

DIM \ PINS **	14	16	18	20
A MAX	0.775 (19,69)	0.775 (19,69)	0.920 (23,37)	1.060 (26,92)
A MIN	0.745 (18,92)	0.745 (18,92)	0.850 (21,59)	0.940 (23,88)
MS–001 VARIATION (C)	AA	BB	AC	AD

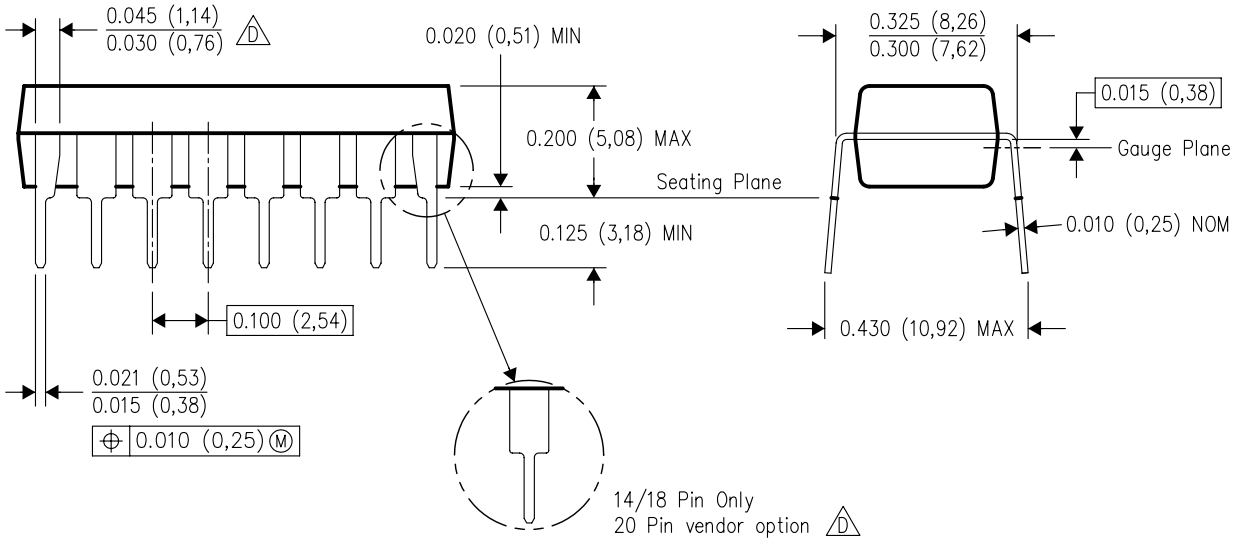

4040049/E 12/2002

NOTES:
A. All linear dimensions are in inches (millimeters).
B. This drawing is subject to change without notice.
C. Falls within JEDEC MS–001, except 18 and 20 pin minimum body length (Dim A).
D. The 20 pin end lead shoulder width is a vendor option, either half or full width.

重要声明和免责声明

TI“按原样”提供技术和可靠性数据（包括数据表）、设计资源（包括参考设计）、应用或其他设计建议、网络工具、安全信息和其他资源，不保证没有瑕疵且不做出任何明示或暗示的担保，包括但不限于对适销性、某特定用途方面的适用性或不侵犯任何第三方知识产权的暗示担保。

这些资源可供使用 TI 产品进行设计的熟练开发人员使用。您将自行承担以下全部责任：(1) 针对您的应用选择合适的 TI 产品，(2) 设计、验证并测试您的应用，(3) 确保您的应用满足相应标准以及任何其他功能安全、信息安全、监管或其他要求。

这些资源如有变更，恕不另行通知。TI 授权您仅可将这些资源用于研发本资源所述的 TI 产品的应用。严禁对这些资源进行其他复制或展示。您无权使用任何其他 TI 知识产权或任何第三方知识产权。您应全额赔偿因在这些资源的使用中对 TI 及其代表造成的任何索赔、损害、成本、损失和债务，TI 对此概不负责。

TI 提供的产品受 TI 的销售条款或 ti.com 上其他适用条款/TI 产品随附的其他适用条款的约束。TI 提供这些资源并不会扩展或以其他方式更改 TI 针对 TI 产品发布的适用的担保或担保免责声明。

TI 反对并拒绝您可能提出的任何其他或不同的条款。

邮寄地址：Texas Instruments, Post Office Box 655303, Dallas, Texas 75265
Copyright © 2022，德州仪器 (TI) 公司