CDx4HC405x、CDx4HCT405x 高速 CMOS 逻辑模拟多路复用器和多路信号分离器

1 特性

- 宽模拟输入电压范围：±5V（最大值）
- 低导通电阻
  - 70Ω（典型值）($V_{CC} – V_{EE}$ = 4.5V)
  - 40Ω（典型值）($V_{CC} – V_{EE}$ = 9V)
- 低开关间串扰
- 快速开关和传播速度
- 先断后合开关
- 宽工作温度范围：
  –55°C 至 +125°C
- CD54HC 和 CD74HC 类型
  - 工作控制电压：2V 至 6V
  - 开关电压：0V 至 10V
- CD54HCT 和 CD74HCT 类型
  - 工作控制电压：4.5V 至 5.5V
  - 开关电压：0V 至 10V
  - 直接 LSTTL 输入逻辑兼容性
    V_{IL} = 0.8V（最大值），V_{IH} = 2V（最小值）
  - CMOS 输入兼容性
    在电压为 V_{OL}、V_{OH}时，I_I ≤ 1μA
- 对于符合 MIL-PRF-38535 标准的产品，所有参数均经过测试，除非另外注明。对于所有其他产品，生产流程不一定包含对所有参数的测试。

2 应用

- 数字音频广播
- 信号门控
- 工厂自动化
- 电视
- 电器
- 可编程逻辑电路
- 传感器

3 说明

CDx4HC405x 和 CDx4HCT405x 器件是数字控制的模拟开关，其使用硅栅 CMOS 技术并借助标准 CMOS 集成电路的低功耗特性来实现与 LSTTL 接近的运行速度。

这些模拟多路复用器和多路信号分离器可控制模拟电压，该电压可能会在整个电源电压范围内变化（例如，V_{CC} 变为 V_{EE}）。它们是双向开关，可将任何模拟输入用作输出，反之亦然。这些开关具有低导通电阻和低关断泄漏。此外，所有这些器件均具有使能控制，当处于高位时将禁用所有开关，将其置于关断状态。

器件信息(1)

器件型号	封装	封装尺寸（标称值）
CD54HCx405xF	CDIP (16)	19.56mm × 6.92mm
CD74HCx405xE	PDIP (16)	19.30mm x 6.35mm
CD74HCx405xM	SOIC (16)	9.90mm x 3.91mm
CD74HCx405xNS	SOP (16)	10.30mm × 5.30mm
CD74HCx405xPW	TSSOP (16)	5.00mm × 4.40mm

(1) 如需了解所有可用封装，请参阅数据表末尾的可订购产品附录。

HC4051 和 HCT4051 的功能方框图

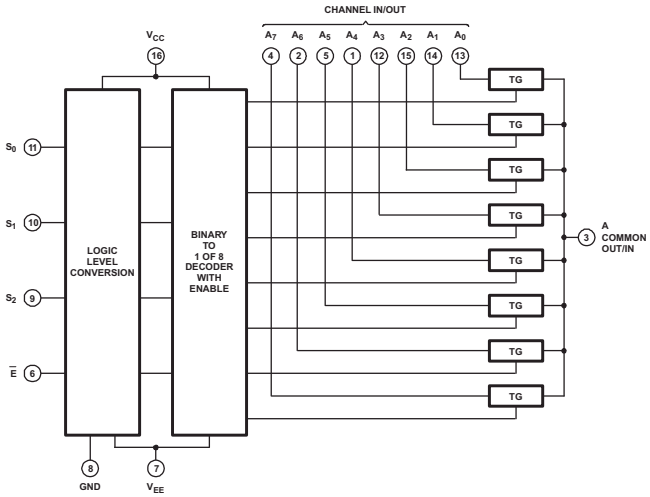

本文档旨在为方便起见，提供有关 TI 产品中文版本的信息，以确认产品的概要。 有关适用的官方英文版本的最新信息，请访问 www.ti.com，其内容始终优先。 TI 不保证翻译的准确性和有效性。 在实际设计之前，请务必参考最新版本的英文版本。

目录

1 特性 ... 1
2 应用 ... 1
3 说明 ... 1
4 修订历史记录 ... 2
5 Pin Configuration and Functions ... 3
6 Specifications ... 6
6.1 Absolute Maximum Ratings ... 6
6.2 ESD Ratings ... 6
6.3 Recommended Operating Conditions ... 6
6.4 Thermal Information ... 7
6.5 Electrical Characteristics: HC Devices ... 7
6.6 Electrical Characteristics: HCT Devices ... 10
6.7 Switching Characteristics, V_{CC} = 5 V ... 12
6.8 Switching Characteristics, C_L = 50 pF ... 13
6.9 Analog Channel Specifications ... 16
6.10 Typical Characteristics ... 17
7 Parameter Measurement Information ... 18
8 Detailed Description ... 20
8.1 Overview ... 20
8.2 Functional Block Diagrams ... 20
8.3 Feature Description ... 22
8.4 Device Functional Modes ... 22
9 Application and Implementation ... 23
9.1 Application Information ... 23
9.2 Typical Application ... 23
10 Power Supply Recommendations ... 24
11 Layout ... 25
11.1 Layout Guidelines ... 25
11.2 Layout Example ... 25
12 器件和文档支持 ... 26
12.1 文档支持 ... 26
12.2 相关链接 ... 26
12.3 接收文档更新通知 ... 26
12.4 社区资源 ... 26
12.5 商标 ... 26
12.6 静电放电警告 ... 26
12.7 Glossary ... 27
13 机械、封装和可订购信息 ... 27

4 修订历史记录

注：之前版本的页码可能与当前版本有所不同。

Changes from Revision L (February 2017) to Revision M — **Page**

- 将*特性* 从 7Ω（典型值）更改为 70Ω（典型值） ... 1

Changes from Revision K (September 2015) to Revision L — **Page**

- Changed Charged device model (CDM) value from: ±1000 V to: ±200 V ... 6
- 已添加 *接收文档更新通知*部分 ... 26

Changes from Revision J (February 2011) to Revision K — **Page**

- 删除了*订购信息* 表。 ... 1
- 已添加 添加了*器件信息* 表、*引脚功能* 表、*ESD 额定值* 表、*热性能信息* 表、*详细 说明* 部分、*应用 和实施* 部分、*电源建议* 部分、*布局* 部分、*器件和文档支持* 部分以及*机械、封装和可订购信息* 部分 ... 1
- 向*特性*列表中添加了“军用免责声明” ... 1

Copyright © 1997–2019, Texas Instruments Incorporated

5 Pin Configuration and Functions

CD54HC4051, CD54HCT4051, CD74HC4051, CD74HCT4051 J, N, D, NS, PW Packages
16-Pin CDIP, PDIP, SOIC, SO, TSSOP
Top View

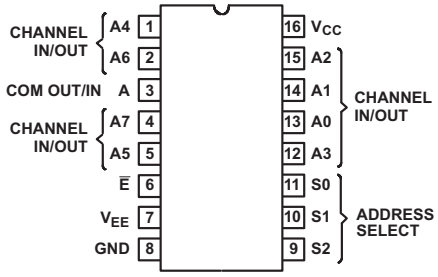

Pin Functions for CDx4HCx4051B

PIN		I/O	DESCRIPTION
NO.	NAME		
1	CH A4 IN/OUT	I/O	Channel 4 in/out
2	CH A6 IN/OUT	I/O	Channel 6 in/out
3	COM OUT/IN	I/O	Common out/in
4	CH A7 IN/OUT	I/O	Channel 7 in/out
5	CH A5 IN/OUT	I/O	Channel 5 in/out
6	$\overline{E}$	I	Enable Channels (Active Low). See Table 1.
7	V_{EE}	—	Negative power input
8	GND	—	Ground
9	S2	I	Channel select 2. See Table 1.
10	S1	I	Channel select 1. See Table 1.
11	S0	I	Channel select 0. See Table 1.
12	CH A3 IN/OUT	I/O	Channel 3 in/out
13	CH A0 IN/OUT	I/O	Channel 0 in/out
14	CH A1 IN/OUT	I/O	Channel 1 in/out
15	CH A2 IN/OUT	I/O	Channel 2 in/out
16	V_{CC}	—	Positive power input

Copyright © 1997–2019, Texas Instruments Incorporated

CD54HC4052, CD74HC4052, CD74HCT4052 J, N, D, NS, PW Packages
16-Pin CDIP, PDIP, SOIC, SO, TSSOP
Top View

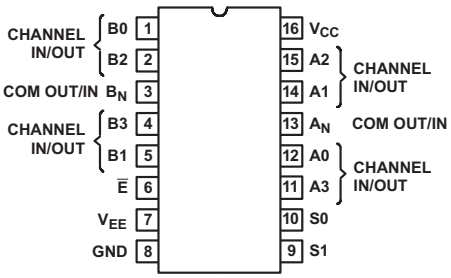

Pin Functions for CDx4HCx4052B

PIN		I/O	DESCRIPTION
NO.	NAME		
1	CH B0 IN/OUT	I/O	Channel B0 in/out
2	CH B2 IN/OUT	I/O	Channel B2 in/out
3	COM B OUT/IN	I/O	B common out/in
4	CH B3 IN/OUT	I/O	Channel B3 in/out
5	CH B1 IN/OUT	I/O	Channel B1 in/out
6	$\overline{E}$	I	Enable channels (Active Low). See Table 2.
7	V_{EE}	—	Negative power input
8	GND	—	Ground
9	S1	I	Channel select 1. See Table 2.
10	S0	I	Channel select 0. See Table 2.
11	CH A3 IN/OUT	I/O	Channel A3 in/out
12	CH A0 IN/OUT	I/O	Channel A0 in/out
13	COM A IN/OUT	I/O	A common out/in
14	CH A1 IN/OUT	I/O	Channel A1 in/out
15	CH A2 IN/OUT	I/O	Channel A2 in/out
16	V_{CC}	—	Positive power input

Copyright © 1997–2019, Texas Instruments Incorporated

CD54HC4053 CD74HC4053 CD74HCT4053 J, N, D, NS, PW Packages
16-Pin CDIP, PDIP, SOIC, SOP, TSSOP
TOP VIEW

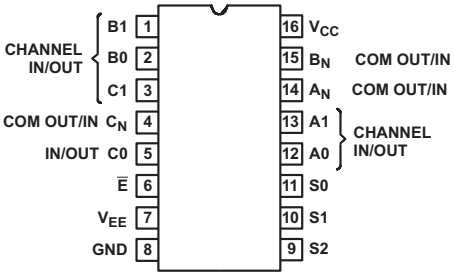

Pin Functions CDx4HCx4053B

PIN		I/O	DESCRIPTION
NO.	NAME		
1	B1 IN/OUT	I/O	B channel Y in/out
2	B0 IN/OUT	I/O	B channel X in/out
3	C1 IN/OUT	I/O	C channel Y in/out
4	COM C OUT/IN	I/O	C common out/in
5	C0 IN/OUT	I/O	C channel X in/out
6	$\overline{E}$	I	Enable channels (Active Low). See Table 3.
7	V_{EE}	—	Negative power input
8	GND	—	Ground
9	S2	I	Channel select 2. See Table 3.
10	S1	I	Channel select 1. See Table 3.
11	S0	I	Channel select 0. See Table 3.
12	A0 IN/OUT	I/O	A channel X in/out
13	A1 IN/OUT	I/O	A channel Y in/out
14	COM A OUT/IN	I/O	A common out/in
15	COM B OUT/IN	I/O	B common out/in
16	V_{CC}	—	Positive power input

Copyright © 1997–2019, Texas Instruments Incorporated

6 Specifications

6.1 Absolute Maximum Ratings

over operating free-air temperature range (unless otherwise noted)[1]

			MIN	MAX	UNIT
$V_{CC} - V_{EE}$	DC supply voltage		–0.5	10.5	V
V_{CC}	DC supply voltage		–0.5	7	V
V_{EE}	DC supply voltage		0.5	–7	V
I_{IK}	DC input diode current	$V_I < -0.5$ V or $V_I > V_{CC} + 0.5$ V		±20	mA
I_{OK}	DC switch diode current	$V_I < V_{EE} - 0.5$ V or $V_I > V_{CC} + 0.5$ V		±20	mA
	DC switch current[2]	$V_I > V_{EE} - 0.5$ V or $V_I < V_{CC} + 0.5$ V		±25	mA
I_{CC}	DC V_{CC} or ground current			±50	mA
I_{EE}	DC V_{EE} current			–20	mA
T_{JMAX}	Maximum junction temperature			150	°C
T_{LMAX}	Maximum lead temperature	Soldering 10 s		300	°C
T_J	Junction temperature			150	°C
T_{stg}	Storage temperature		–65	150	°C

(1) Stresses beyond those listed under *Absolute Maximum Ratings* may cause permanent damage to the device. These are stress ratings only, and functional operation of the device at these or any other conditions beyond those indicated under *Recommended Operating Conditions* is not implied. Exposure to absolute-maximum-rated conditions for extended periods may affect device reliability.
(2) All voltages referenced to GND unless otherwise specified.

6.2 ESD Ratings

			VALUE	UNIT
$V_{(ESD)}$	Electrostatic discharge	Human body model (HBM), per ANSI/ESDA/JEDEC JS-001[1]	±500	V
		Charged device model (CDM), per JEDEC specification JESD22-C101 or ANSI/ESDA/JEDEC JS-002[2]	±200	

(1) JEDEC document JEP155 states that 500-V HBM allows safe manufacturing with a standard ESD control process.
(2) JEDEC document JEP157 states that 250-V CDM allows safe manufacturing with a standard ESD control process.

6.3 Recommended Operating Conditions

over operating free-air temperature range (unless otherwise noted)[1]

			MIN	NOM	MAX	UNIT
V_{CC}	Supply voltage range (T_A = full package temperature range)[2]	CD54 and 74HC types	2		6	V
		CD54 and 74HCT types	4.5		5.5	
$V_{CC} - V_{EE}$	Supply voltage range (T_A = full package temperature range)	CD54 and 74HC types, CD54 and 74HCT types (see Figure 1)	2		10	V
V_{EE}	Supply voltage range (T_A = full package temperature range)[3]	CD54 and 74HC types, CD54 and 74HCT types (see Figure 2)	0		–6	V
V_I	DC input control voltage		GND		V_{CC}	V
V_{IS}	Analog switch I/O voltage		V_{EE}		V_{CC}	V
T_A	Operating temperature		–55		125	°C
t_r, t_f	Input rise and fall times	2 V	0		1000	ns
		4.5 V	0		500	
		6 V	0		400	

(1) For maximum reliability, nominal operating conditions must be selected so that operation is always within the ranges specified in the *Recommended Operating Conditions* table.
(2) All voltages referenced to GND unless otherwise specified.
(3) In certain applications, the external load resistor current may include both V_{CC} and signal line components. To avoid drawing V_{CC} current when switch current flows into the transmission gate inputs, the voltage drop across the bidirectional switch must not exceed 0.6 V (calculated from r_{ON} values shown in *Electrical Characteristics: HC Devices* and *Electrical Characteristics: HCT Devices* tables). No V_{CC} current will flow through R_L if the switch current flows into terminal 3 on the HC and HCT4051; terminals 3 and 13 on the HC and HCT4052; terminals 4, 14, and 15 on the HC and HCT4053.

Copyright © 1997–2019, Texas Instruments Incorporated

6.4 Thermal Information

THERMAL METRIC[1]		CD74HC4051			UNIT
		N (PDIP)	NS (SO)	PW (TSSOP)	
		16 PINS	16 PINS	16 PINS	
$R_{\theta JA}$	Junction-to-ambient thermal resistance	49.0	83.0	107.7	°C/W
$R_{\theta JC(top)}$	Junction-to-case (top) thermal resistance	36.3	41.2	42.4	°C/W
$R_{\theta JB}$	Junction-to-board thermal resistance	29.0	43.3	52.8	°C/W
ψ_{JT}	Junction-to-top characterization parameter	21.2	9.2	4.2	°C/W
ψ_{JB}	Junction-to-board characterization parameter	28.9	43.0	52.2	°C/W

(1) For more information about traditional and new thermal metrics, see the *Semiconductor and IC Package Thermal Metrics* application report.

6.5 Electrical Characteristics: HC Devices

PARAMETERS		TEST CONDITIONS					MIN	TYP	MAX	UNIT
		V_{IS} (V)	V_I (V)	V_{EE} (V)	V_{CC} (V)	T_A				
V_{IH}	High-level input voltage				2	25°C	1.5			V
						–40°C to +85°C	1.5			
						–55°C to +125°C	1.5			
					4.5	25°C	3.15			
						–40°C to +85°C	3.15			
						–55°C to +125°C	3.15			
					6	25°C	4.2			
						–40°C to +85°C	4.2			
						–55°C to +125°C	4.2			
V_{IL}	Low-level input voltage				2	25°C			0.5	V
						–40°C to +85°C			0.5	
						–55°C to +125°C			0.5	
					4.5	25°C			1.35	
						–40°C to +85°C			1.35	
						–55°C to +125°C			1.35	
					6	25°C			1.8	
						–40°C to +85°C			1.8	
						–55°C to +125°C			1.8	

Copyright © 1997–2019, Texas Instruments Incorporated

Electrical Characteristics: HC Devices (continued)

PARAMETERS			TEST CONDITIONS					MIN	TYP	MAX	UNIT
			V_{IS} (V)	V_I (V)	V_{EE} (V)	V_{CC} (V)	T_A				
r_{ON}	ON resistance	I_O = 1 mA See Figure 21	V_{CC} or V_{EE}	V_{IL} or V_{IH}	0	4.5	25°C		70	160	Ω
							–40°C to +85°C			200	
							–55°C to +125°C			240	
					0	6	25°C		60	140	
							–40°C to +85°C			175	
							–55°C to +125°C			210	
					–4.5	4.5	25°C		40	120	
							–40°C to +85°C			150	
							–55°C to +125°C			180	
			V_{CC} to V_{EE}		0	4.5	25°C		90	180	
							–40°C to +85°C			225	
							–55°C to +125°C			270	
					0	6	25°C		80	160	
							–40°C to +85°C			200	
							–55°C to +125°C			240	
					–4.5	4.5	25°C		45	130	
							–40°C to +85°C			162	
							–55°C to +125°C			195	
Δr_{ON}	Maximum ON resistance between any two channels				0	4.5	25°C		10		Ω
					0	6	25°C		8.5		
					–4.5	4.5	25°C		5		

Copyright © 1997–2019, Texas Instruments Incorporated

Electrical Characteristics: HC Devices (continued)

PARAMETERS			TEST CONDITIONS					MIN	TYP	MAX	UNIT
			V_{IS} (V)	V_I (V)	V_{EE} (V)	V_{CC} (V)	T_A				
I_{IZ}	Switch ON/OFF leakage current	1 and 2 channels	For switch OFF: When $V_{IS} = V_{CC}$, $V_{OS} = V_{EE}$; When $V_{IS} = V_{EE}$, $V_{OS} = V_{CC}$, For switch ON: All applicable combinations of V_{IS} and V_{OS} voltage levels	V_{IL} or V_{IH}	0	6	25°C			±0.1	µA
							–40°C to +85°C			±1	
							–55°C to +125°C			±1	
		4053			–5	5	25°C			±0.1	
							–40°C to +85°C			±1	
							–55°C to +125°C			±1	
		4 channels			0	6	25°C			±0.1	
							–40°C to +85°C			±1	
							–55°C to +125°C			±1	
		4052			–5	5	25°C			±0.2	
							–40°C to +85°C			±2	
							–55°C to +125°C			±2	
		8 channels			0	6	25°C			±0.2	
							–40°C to +85°C			±2	
							–55°C to +125°C			±2	
		4051			–5	5	25°C			±0.4	
							–40°C to +85°C			±4	
							–55°C to +125°C			±4	
I_{IL}	Control input leakage current			V_{CC} or GND	0	6	25°C			±0.1	µA
							–40°C to +85°C			±1	
							–55°C to +125°C			±1	
I_{CC}	Quiescent device current	$I_O = 0$	When $V_{IS} = V_{EE}$, $V_{OS} = V_{CC}$	V_{CC} or GND	0	6	25°C			8	µA
							–40°C to +85°C			80	
							–55°C to +125°C			160	
			When $V_{IS} = V_{CC}$, $V_{OS} = V_{EE}$		–5	5	25°C			16	
							–40°C to +85°C			160	
							–55°C to +125°C			320	

Copyright © 1997–2019, Texas Instruments Incorporated

6.6 Electrical Characteristics: HCT Devices

PARAMETER			TEST CONDITIONS					MIN	TYP	MAX	UNIT
			V_{IS} (V)	V_I (V)	V_{EE} (V)	V_{CC} (V)	T_A				
V_{IH}	High-level input voltage					4.5 to 5.5	25°C	2			V
							–40°C to +85°C	2			
							–55°C to +125°C	2			
V_{IL}	Low-level input voltage					4.5 to 5.5	25°C			0.8	V
							–40°C to +85°C			0.8	
							–55°C to +125°C			0.8	
r_{ON}	ON resistance	I_O = 1 mA See Figure 6	V_{CC} or V_{EE}	V_{IL} or V_{IH}	0	4.5	25°C		70	160	Ω
							–40°C to +85°C			200	
							–55°C to +125°C			240	
					–4.5	4.5	25°C		40	120	
							–40°C to +85°C			150	
							–55°C to +125°C			180	
			V_{CC} to V_{EE}		0	4.5	25°C		90	180	
							–40°C to +85°C			225	
							–55°C to +125°C			270	
					–4.5	4.5	25°C		45	130	
							–40°C to +85°C			162	
							–55°C to +125°C			195	
Δr_{ON}	Maximum ON resistance between any two channels				0	4.5	25°C		10		Ω
					–4.5	4.5	25°C		5		

Copyright © 1997–2019, Texas Instruments Incorporated

Electrical Characteristics: HCT Devices (continued)

PARAMETER			TEST CONDITIONS					MIN	TYP	MAX	UNIT
			V_{IS} (V)	V_I (V)	V_{EE} (V)	V_{CC} (V)	T_A				
I_{IZ}	Switch ON/OFF leakage current	1 and 2 channels	For switch OFF: When $V_{IS} = V_{CC}$, $V_{OS} = V_{EE}$; When $V_{IS} = V_{EE}$, $V_{OS} = V_{CC}$ For switch ON: All applicable combinations of V_{IS} and V_{OS} voltage levels	V_{IL} or V_{IH}	0	6	25°C			±0.1	µA
							–40°C to +85°C			±1	
							–55°C to +125°C			±1	
		4053			–5	5	25°C			±0.1	
							–40°C to +85°C			±1	
							–55°C to +125°C			±1	
		4 channels			0	6	25°C			±0.1	
							–40°C to +85°C			±1	
							–55°C to +125°C			±1	
		4052			–5	5	25°C			±0.2	
							–40°C to +85°C			±2	
							–55°C to +125°C			±2	
		8 channels			0	6	25°C			±0.2	
							–40°C to +85°C			±2	
							–55°C to +125°C			±2	
		4051			–5	5	25°C			±0.4	
							–40°C to +85°C			±4	
							–55°C to +125°C			±4	
I_{IL}	Control input leakage current			See(1)		5.5	25°C			±0.1	µA
							–40°C to +85°C			±1	
							–55°C to +125°C			±1	
I_{CC}	Quiescent device current	$I_O = 0$	When $V_{IS} = V_{EE}$, $V_{OS} = V_{CC}$	V_{CC} or GND	0	5.5	25°C			8	µA
							–40°C to +85°C			80	
							–55°C to +125°C			160	
			When $V_{IS} = V_{CC}$, $V_{OS} = V_{EE}$		–4.5	5.5	25°C			16	µA
							–40°C to +85°C			160	
							–55°C to +125°C			320	
ΔI_{CC}	Additional quiescent device current per input pin: 1 unit load(2)		ΔI_{CC}(2)	V_{CC} – 2.1		4.5 to 5.5	25°C		100	360	µA
							–40°C to +85°C			450	
							–55°C to +125°C			490	

(1) Any voltage between V_{CC} and GND.
(2) For dual-supply systems, theoretical worst-case (V_I = 2.4 V, V_{CC} = 5.5 V) specification is 1.8 mA.

6.7 Switching Characteristics, V_{CC} = 5 V

V_{CC} = 5 V, T_A = 25°C, input t_r, t_f = 6 ns

PARAMETER		TEST CONDITIONS		C_L (pF)	MIN	TYP	MAX	UNIT
t_{PHL}, t_{PLH}	Propagation delay	Switch IN to OUT	CDx4HC4051	15		4		ns
			CDx4HCT4051			4		
			CDx4HC4052			4		
			CDx4HCT4052			4		
			CDx4HC4053			4		
			CDx4HCT4053			4		
t_{PHZ}, t_{PLZ}		Switch turn-off (S or $\overline{E}$)	CDx4HC4051	15		19		ns
			CDx4HCT4051			19		
			CDx4HC4052			21		
			CDx4HCT4052			21		
			CDx4HC4053			18		
			CDx4HCT4053			18		
t_{PZH}, t_{PZL}		Switch turn-on (S or $\overline{E}$)	CDx4HC4051	15		19		ns
			CDx4HCT4051			23		
			CDx4HC4052			27		
			CDx4HCT4052			29		
			CDx4HC4053			18		
			CDx4HCT4053			20		
C_{PD}	Power dissipation capacitance(1)		CDx4HC4051			50		pF
			CDx4HCT4051			52		
			CDx4HC4052			74		
			CDx4HCT4052			76		
			CDx4HC4053			38		
			CDx4HCT4053			42		

(1) C_{PD} is used to determine the dynamic power consumption, per package. $P_D = C_{PD} V_{CC}^2 f_I + \sum (C_L + C_S) V_{CC}^2 f_O$, f_O = output frequency, f_I = input frequency, C_L = output load capacitance, C_S = switch capacitance, V_{CC} = supply voltage

Copyright © 1997–2019, Texas Instruments Incorporated

6.8 Switching Characteristics, C_L = 50 pF

C_L = 50 pF, input t_r, t_f = 6 ns

PARAMETER			V_{EE} (V)	V_{CC} (V)	TEST CONDITIONS		MIN	MAX	UNIT
t_{PLH}, t_{PHL}	Propagation delay, switch in to out		0	2	T_A = 25°C	HC		60	ns
					T_A = –40°C to +85°C	HC		75	
					T_A = –55°C to +125°C	HC		90	
			0	4.5	T_A = 25°C	HC, HCT		12	
					T_A = –40°C to +85°C	HC, HCT		15	
					T_A = –55°C to +125°C	HC, HCT		18	
			0	6	T_A = 25°C	HC		10	
					T_A = –40°C to +85°C	HC		13	
					T_A = –55°C to +125°C	HC		15	
			–4.5	4.5	T_A = 25°C	HC, HCT		8	
					T_A = –40°C to +85°C	HC, HCT		10	
					T_A = –55°C to +125°C	HC, HCT		12	
t_{PHZ}, t_{PLZ}	Maximum switch turn OFF delay from S or $\overline{E}$ to switch output	4051	0	2	T_A = 25°C	HC		225	ns
					T_A = –40°C to +85°C	HC		280	
					T_A = –55°C to +125°C	HC		340	
			0	4.5	T_A = 25°C	HC, HCT		45	
					T_A = –40°C to +85°C	HC, HCT		56	
					T_A = –55°C to +125°C	HC, HCT		68	
			0	6	T_A = 25°C	HC		38	
					T_A = –40°C to +85°C	HC		48	
					T_A = –55°C to +125°C	HC		57	
			–4.5	4.5	T_A = 25°C	HC, HCT		32	
					T_A = –40°C to +85°C	HC, HCT		40	
					T_A = –55°C to +125°C	HC, HCT		48	
t_{PHZ}, t_{PLZ}	Maximum switch turn OFF delay from S or $\overline{E}$ to switch output	4052	0	2	T_A = 25°C	HC		250	ns
					T_A = –40°C to +85°C	HC		315	
					T_A = –55°C to +125°C	HC		375	
			0	4.5	T_A = 25°C	HC, HCT		50	
					T_A = –40°C to +85°C	HC, HCT		63	
					T_A = –55°C to +125°C	HC, HCT		75	
			0	6	T_A = 25°C	HC		43	
					T_A = –40°C to +85°C	HC		54	
					T_A = –55°C to +125°C	HC		65	
			–4.5	4.5	T_A = 25°C	HC		38	
						HCT		38	
					T_A = –40°C to +85°C	HC		48	
						HCT		48	
					T_A = –55°C to +125°C	HC		57	
						HCT		57	

Copyright © 1997–2019, Texas Instruments Incorporated

Switching Characteristics, C_L = 50 pF (continued)

C_L = 50 pF, input t_r, t_f = 6 ns

PARAMETER			V_{EE} (V)	V_{CC} (V)	TEST CONDITIONS		MIN	MAX	UNIT
t_{PHZ}, t_{PLZ}	Maximum switch turn OFF delay from S or $\overline{E}$ to switch output	4053	0	2	T_A = 25°C	HC		210	ns
					T_A = –40°C to +85°C	HC		265	
					T_A = –55°C to +125°C	HC		315	
			0	4.5	T_A = 25°C	HC		42	
						HCT		44	
					T_A = –40°C to +85°C	HC		53	
						HCT		53	
					T_A = –55°C to +125°C	HC		63	
						HCT		66	
			0	6	T_A = 25°C	HC		36	
					T_A = –40°C to +85°C	HC		45	
					T_A = –55°C to +125°C	HC		54	
			–4.5	4.5	T_A = 25°C	HC		29	
						HCT		31	
					T_A = –40°C to +85°C	HC		36	
						HCT		39	
					T_A = –55°C to +125°C	HC		44	
						HCT		47	
t_{PZL}, t_{PZH}	Maximum switch turn ON delay from S or $\overline{E}$ to switch output	4051	0	2	T_A = 25°C	HC		225	ns
					T_A = –40°C to +85°C	HC		280	
					T_A = –55°C to +125°C	HC		340	
			0	4.5	T_A = 25°C	HC		45	
						HCT		55	
					T_A = –40°C to +85°C	HC		56	
						HCT		69	
					T_A = –55°C to +125°C	HC		68	
						HCT		83	
			0	6	T_A = 25°C	HC		38	
					T_A = –40°C to +85°C	HC		48	
					T_A = –55°C to +125°C	HC		57	
			–4.5	4.5	T_A = 25°C	HC		32	
						HCT		39	
					T_A = –40°C to +85°C	HC		40	
						HCT		49	
					T_A = –55°C to +125°C	HC		48	
						HCT		59	

Copyright © 1997–2019, Texas Instruments Incorporated

Switching Characteristics, C_L = 50 pF (continued)

C_L = 50 pF, input t_r, t_f = 6 ns

PARAMETER			V_{EE} (V)	V_{CC} (V)	TEST CONDITIONS		MIN	MAX	UNIT
t_{PZL}, t_{PZH}	Maximum switch turn ON delay from S or $\overline{E}$ to switch output	4052	0	2	T_A = 25°C	HC		325	ns
					T_A = –40°C to +85°C	HC		405	
					T_A = –55°C to +125°C	HC		490	
			0	4.5	T_A = 25°C	HC		65	
						HCT		70	
					T_A = –40°C to +85°C	HC		81	
						HCT		68	
					T_A = –55°C to +125°C	HC		98	
						HCT		105	
			0	6	T_A = 25°C	HC		55	
					T_A = –40°C to +85°C	HC		69	
					T_A = –55°C to +125°C	HC		83	
			–4.5	4.5	T_A = 25°C	HC		46	
						HCT		48	
					T_A = –40°C to +85°C	HC		58	
						HCT		60	
					T_A = –55°C to +125°C	HC		69	
						HCT		72	
t_{PZL}, t_{PZH}	Maximum switch turn ON delay from S or $\overline{E}$ to switch output	4053	0	2	T_A = 25°C	HC		220	ns
					T_A = –40°C to +85°C	HC		275	
					T_A = –55°C to +125°C	HC		330	
			0	4.5	T_A = 25°C	HC		44	
						HCT		48	
					T_A = –40°C to +85°C	HC		55	
						HCT		60	
					T_A = –55°C to +125°C	HC		66	
						HCT		72	
			0	6	T_A = 25°C	HC		37	
					T_A = –40°C to +85°C	HC		47	
					T_A = –55°C to +125°C	HC		56	
			–4.5	4.5	T_A = 25°C	HC		31	
						HCT		34	
					T_A = –40°C to +85°C	HC		39	
						HCT		43	
					T_A = –55°C to +125°C	HC		47	
						HCT		51	
C_I	Input (control) capacitance				T_A = 25°C	HC, HCT		10	pF
					T_A = –40°C to +85°C	HC, HCT		10	
					T_A = –55°C to +125°C	HC, HCT		10	

Copyright © 1997–2019, Texas Instruments Incorporated

6.9 Analog Channel Specifications

Typical values at T_A = 25°C

PARAMETER		TEST CONDITIONS	HC, HCT TYPES	V_{EE} (V)	V_{CC} (V)	TYP	UNIT
C_I	Switch input capacitance		All			5	pF
C_{COM}	Common output capacitance		4051			25	pF
			4052			12	
			4053			8	
f_{MAX}	Minimum switch frequency response at –3 dB (see Figure 3, Figure 5, and Figure 7)	See Figure 10 (1) (2)	4051	–2.25	2.25	145	MHz
			4052			165	
			4053			200	
			4051	–4.5	4.5	180	
			4052			185	
			4053			200	
	Sine-wave distortion	See Figure 12	All	–2.25%	2.25%	0.035%	
			All	–4.5%	4.5%	0.018%	
	Switch OFF signal feedthrough (see Figure 4, Figure 6, and Figure 8)	See Figure 14 (2) (3)	4051	–2.25	2.25	–73	dB
			4052			–65	
			4053			–64	
			4051	–4.5	4.5	–75	
			4052			–67	
			4053			–66	

(1) Adjust input voltage to obtain 0 dBm at V_{OS} for f_{IN} = 1 MHz.
(2) V_{IS} is centered at (V_{CC} – V_{EE}) / 2.
(3) Adjust input for 0 dBm.

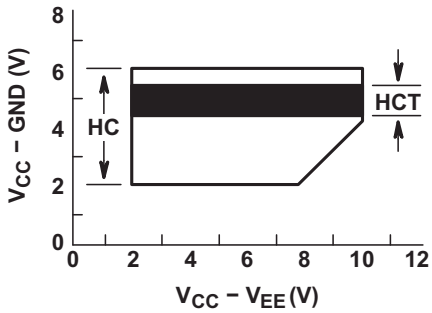

Figure 1. Recommended Operating Area as a Function of (V_{CC} – V_{EE})

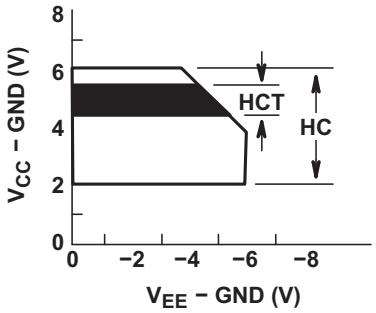

Figure 2. Recommended Operating Area as a Function of (V_{EE} – GND)

Copyright © 1997–2019, Texas Instruments Incorporated

6.10 Typical Characteristics

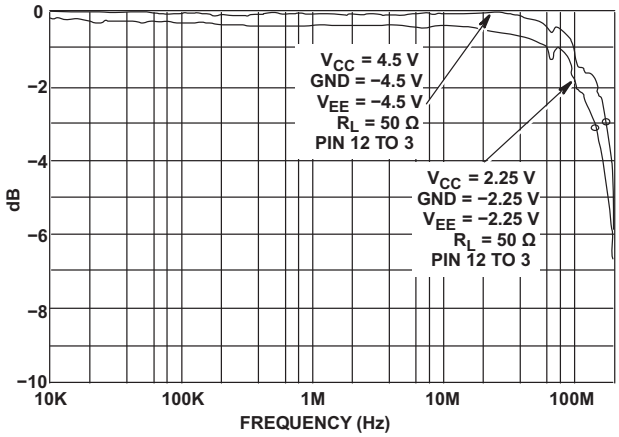

Figure 3. Channel ON Bandwidth (HC and HCT4051)

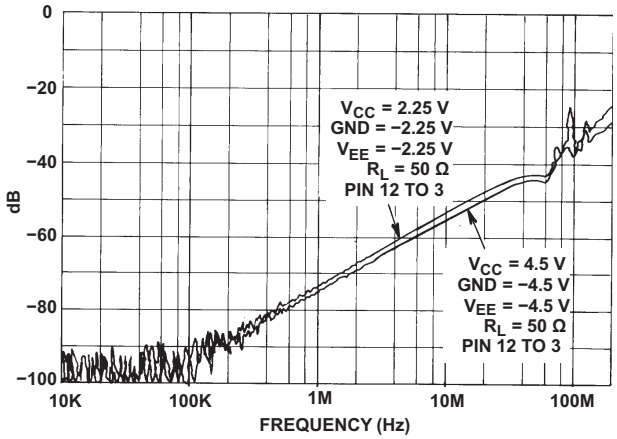

Figure 4. Channel OFF Feedthrough (HC and HCT4051)

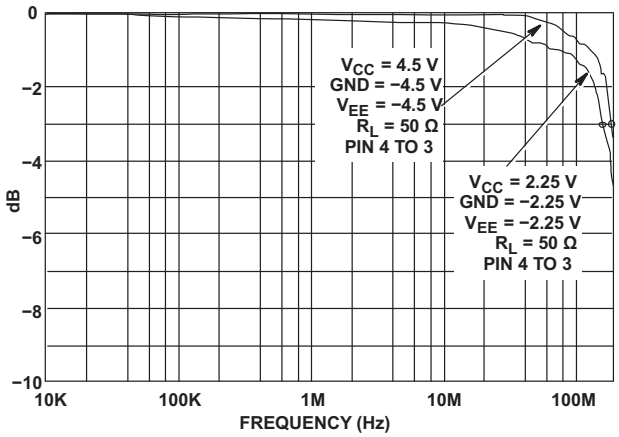

Figure 5. Channel ON Bandwidth (HC and HCT4052)

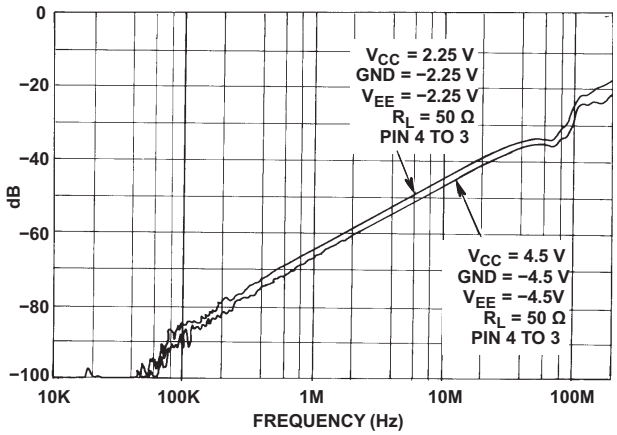

Figure 6. Channel OFF Feedthrough (HC and HCT4052)

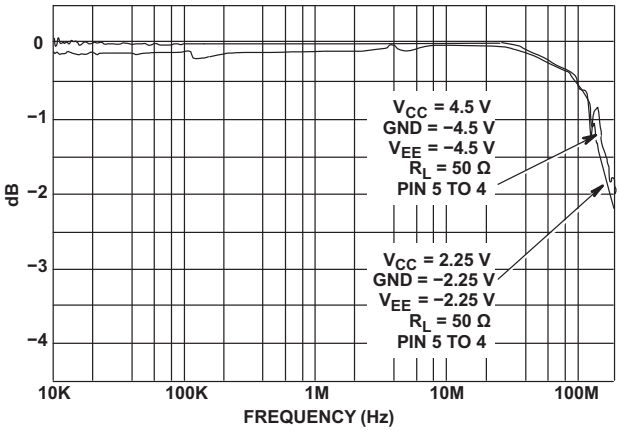

Figure 7. Channel ON Bandwidth (HC and HCT4053)

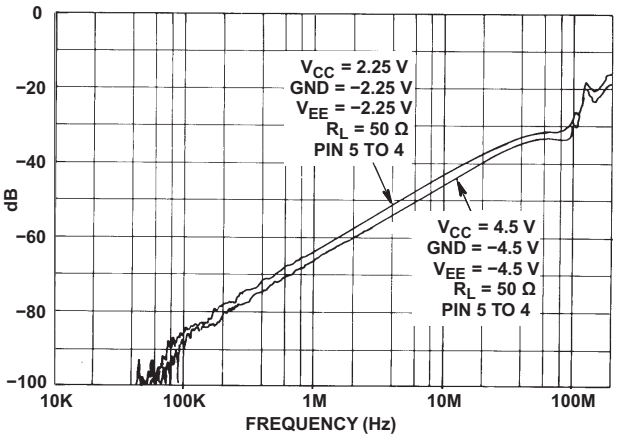

Figure 8. Channel OFF Feedthrough (HC and HCT4053)

Copyright © 1997–2019, Texas Instruments Incorporated

7 Parameter Measurement Information

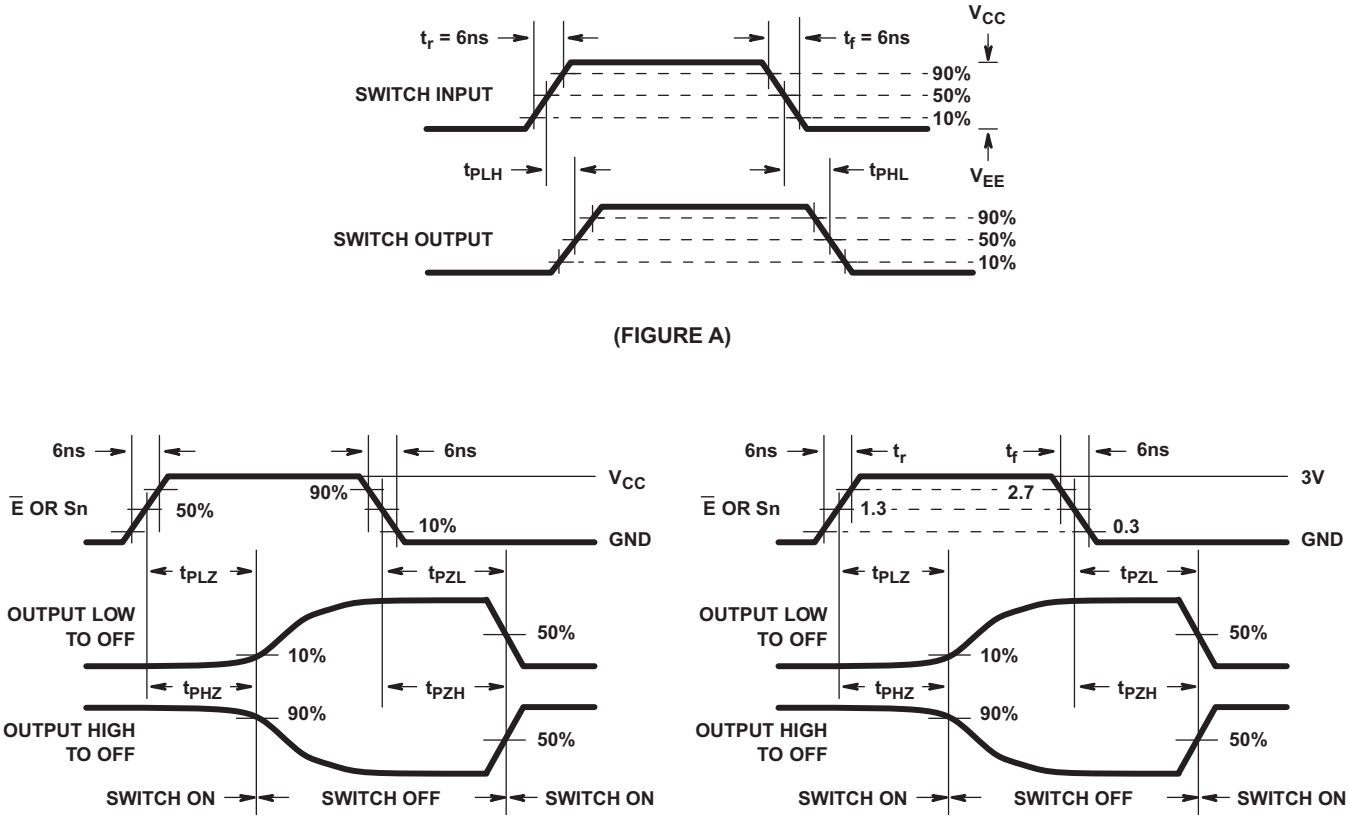

Figure 9. Switch Propagation Delay, Turn-On, Turn-Off Times

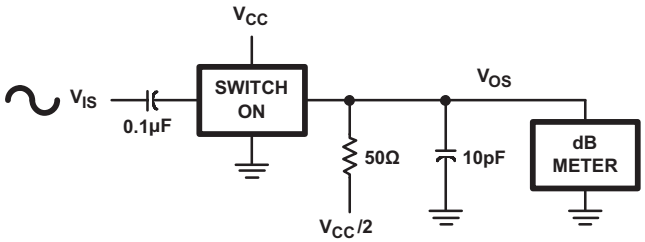

Figure 10. Frequency Response Test Circuit

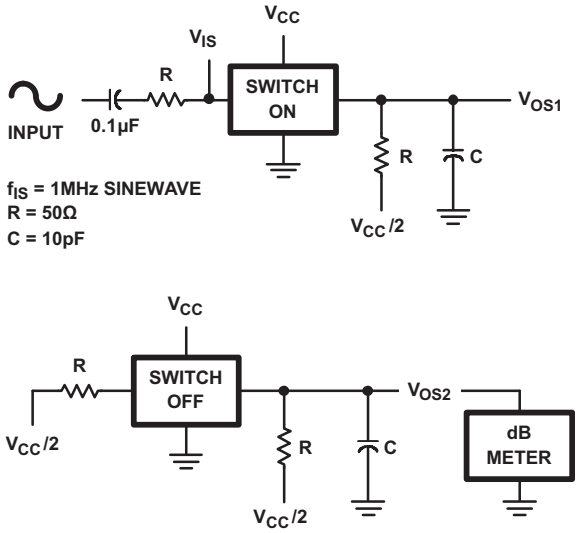

Figure 11. Crosstalk Between Two Switches Test Circuit

Copyright © 1997–2019, Texas Instruments Incorporated

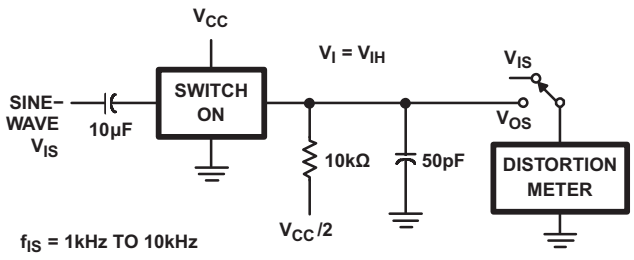

Figure 12. ¼Sine-Wave Distortion Test Circuit

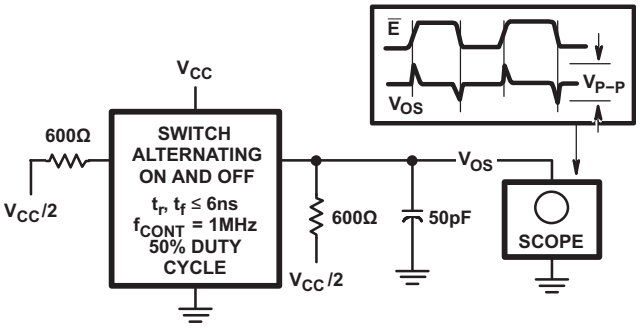

Figure 13. Control to Switch Feedthrough Noise Test Circuit

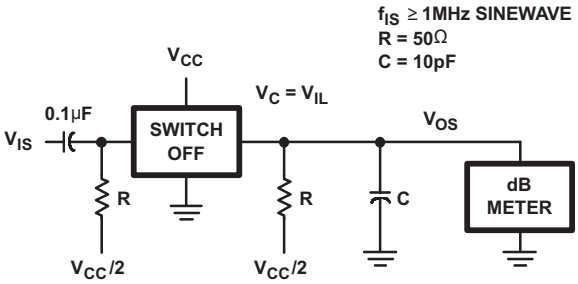

Figure 14. Switch OFF Signal Feedthrough

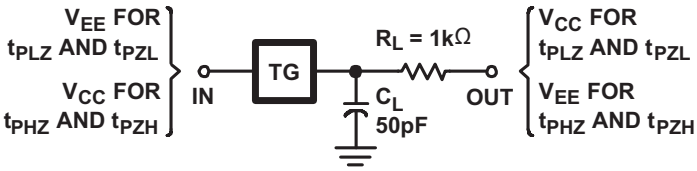

Figure 15. Switch ON/OFF Propagation Delay Test Circuit

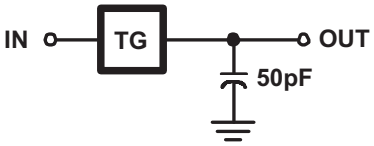

Figure 16. Switch In to Switch Out Propagation Delay Test Circuit

Copyright © 1997–2019, Texas Instruments Incorporated

8 Detailed Description

8.1 Overview

The CDx4HCx4051 devices are a single 8-channel multiplexer having three binary control inputs, S_0, S_1, and S_2 and an $\overline{\text{ENABLE}}$ input. The three binary signals select 1 of 8 channels to be turned on, and connect one of the 8 inputs to the output.

The CDx4HCx4052 devices are a differential 4-channel multiplexer having two binary control inputs, S_0 and S_1, and an $\overline{\text{ENABLE}}$ input. The two binary input signals select 1 of 4 pairs of channels to be turned on and connect the analog inputs to the outputs.

The CDx4HCx4053 devices are a triple 2-channel multiplexer having three separate digital control inputs, S_0, S_1, and S_2 and an $\overline{\text{ENABLE}}$ input. Each control input selects one of a pair of channels that are connected in a single-pole, double-throw configuration.

When these devices are used as demultiplexers, the CHANNEL IN/OUT terminals are the outputs and the COMMON OUT/IN terminals are the inputs.

8.2 Functional Block Diagrams

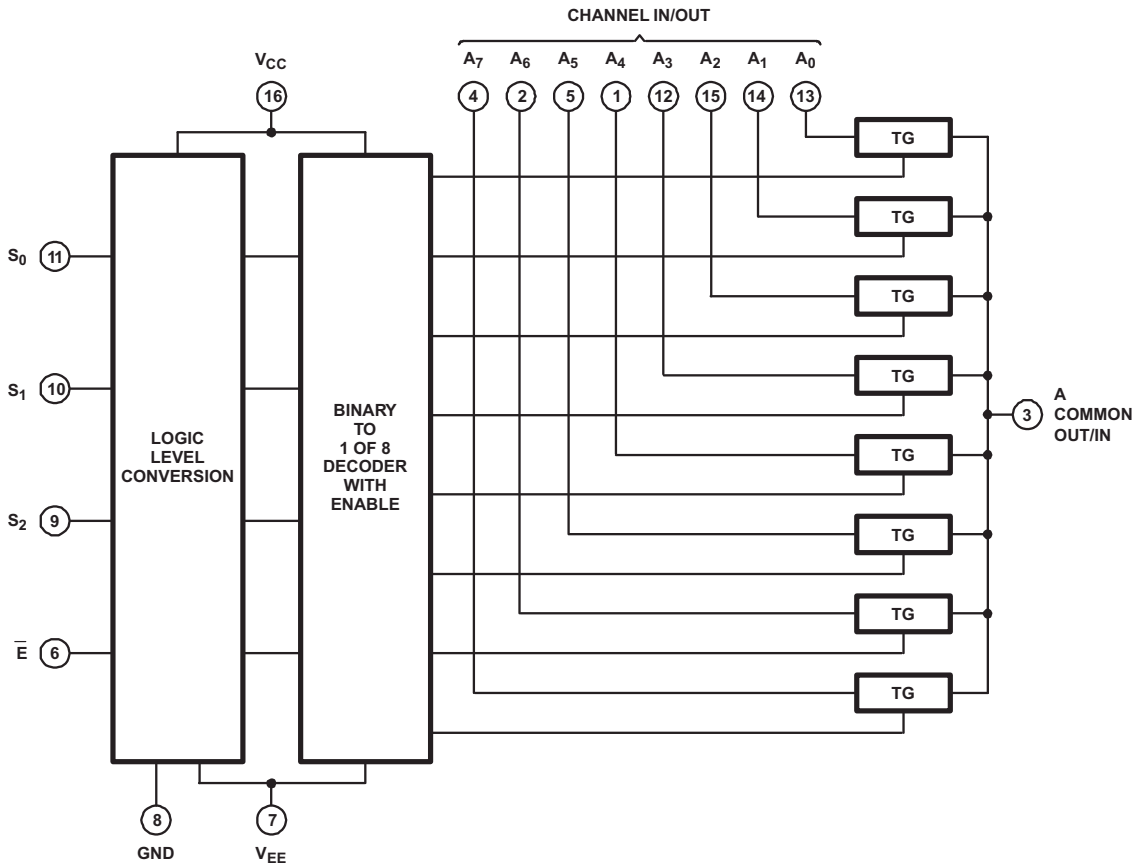

All inputs are protected by standard CMOS protection network.

Figure 17. CDx4HCx4051 Functional Block Diagram

Copyright © 1997–2019, Texas Instruments Incorporated

Functional Block Diagrams (continued)

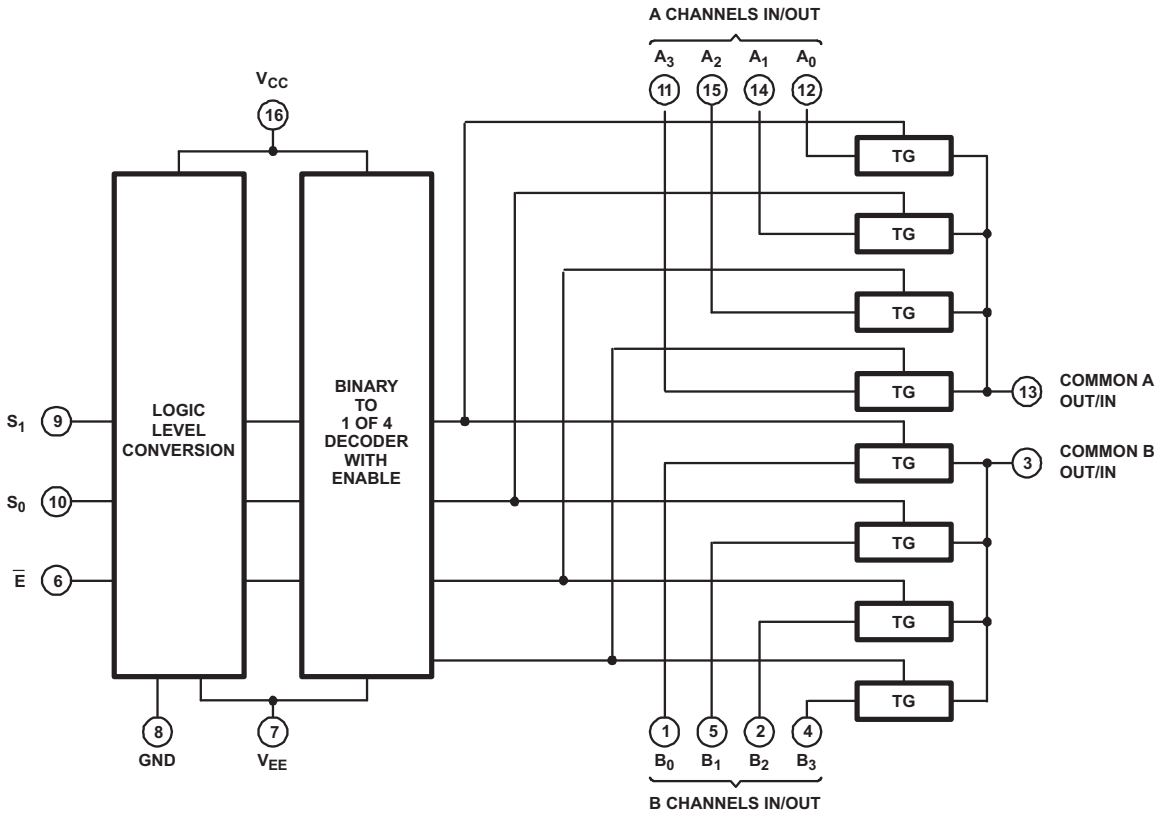

All inputs are protected by standard CMOS protection network.

Figure 18. CDx4HCx4052 Functional Block Diagram

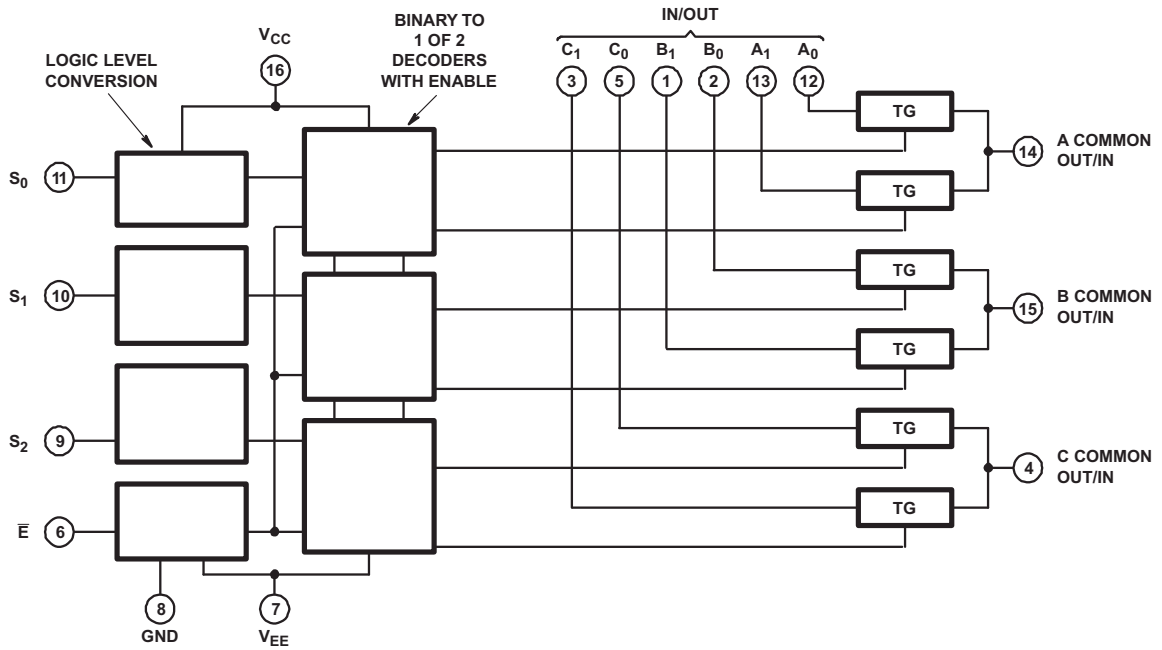

All inputs are protected by standard CMOS protection network.

Figure 19. CDx4HCx4053 Functional Block Diagram

Copyright © 1997–2019, Texas Instruments Incorporated

8.3 Feature Description

The CDx4HCx405x line of multiplexers and demultiplexers can accept a wide range of analog signal levels from –5 to +5 V. They have low ON resistance, typically 70-Ω for $V_{CC} – V_{EE}$ = 4.5 V and 40-Ω for $V_C – V_{EE}$ = 4.5 V, which allows for very little signal loss through the switch.

Binary address decoding on chip makes channel selection easy. When channels are changed, a break-before-make system eliminates channel overlap.

8.4 Device Functional Modes

Table 1. CD54HC4051, CD74HC4051, CD54HCT4051, CD74HCT4051 Function Table(1)

INPUT STATES				ON CHANNEL
ENABLE	S_2	S_1	S_0	
L	L	L	L	A0
L	L	L	H	A1
L	L	H	L	A2
L	L	H	H	A3
L	H	L	L	A4
L	H	L	H	A5
L	H	H	L	A6
L	H	H	H	A7
H	X	X	X	None

(1) X = Don't care

Table 2. CD54HC4052, CD74HC4052, CD54HCT4052, CD74HCT4052 Function Table(1)

INPUT STATES			ON CHANNELS
ENABLE	S_1	S_0	
L	L	L	A0, B0
L	L	H	A1, B1
L	H	L	A2, B2
L	H	H	A3, B3
H	X	X	None

(1) X = Don't care

Table 3. CD54HC4053, CD74HC4053, CD54HCT4053, CD74HCT4053 Function Table(1)

INPUT STATES				ON CHANNELS
ENABLE	S_2	S_1	S_0	
L	L	L	L	C0, B0, A0
L	L	L	H	C0, B0, A1
L	L	H	L	C0, B1, A0
L	L	H	H	C0, B1, A1
L	H	L	L	C1, B0, A0
L	H	L	H	C1, B0, A1
L	H	H	L	C1, B1, A0
L	H	H	H	C1, B1, A1
H	X	X	X	None

(1) X = Don't care

Copyright © 1997–2019, Texas Instruments Incorporated

9 Application and Implementation

NOTE

Information in the following applications sections is not part of the TI component specification, and TI does not warrant its accuracy or completeness. TI's customers are responsible for determining suitability of components for their purposes. Customers should validate and test their design implementation to confirm system functionality.

9.1 Application Information

The CDx4HCx405x line of multiplexers and demultiplexers can be used for a wide variety of applications.

9.2 Typical Application

One application of the CD74HC4051 device is used in conjunction with a microcontroller to poll a keypad. Figure 20 shows the basic schematic for such a polling system. The microcontroller uses the channel-select pins to cycle through the different channels while reading the input to see if a user is pressing any of the keys. This is a very robust setup that allows for simultaneous key presses with very little power consumption. It also uses very few pins on the microcontroller. The down side of polling is that the microcontroller must frequently scan the keys for a press.

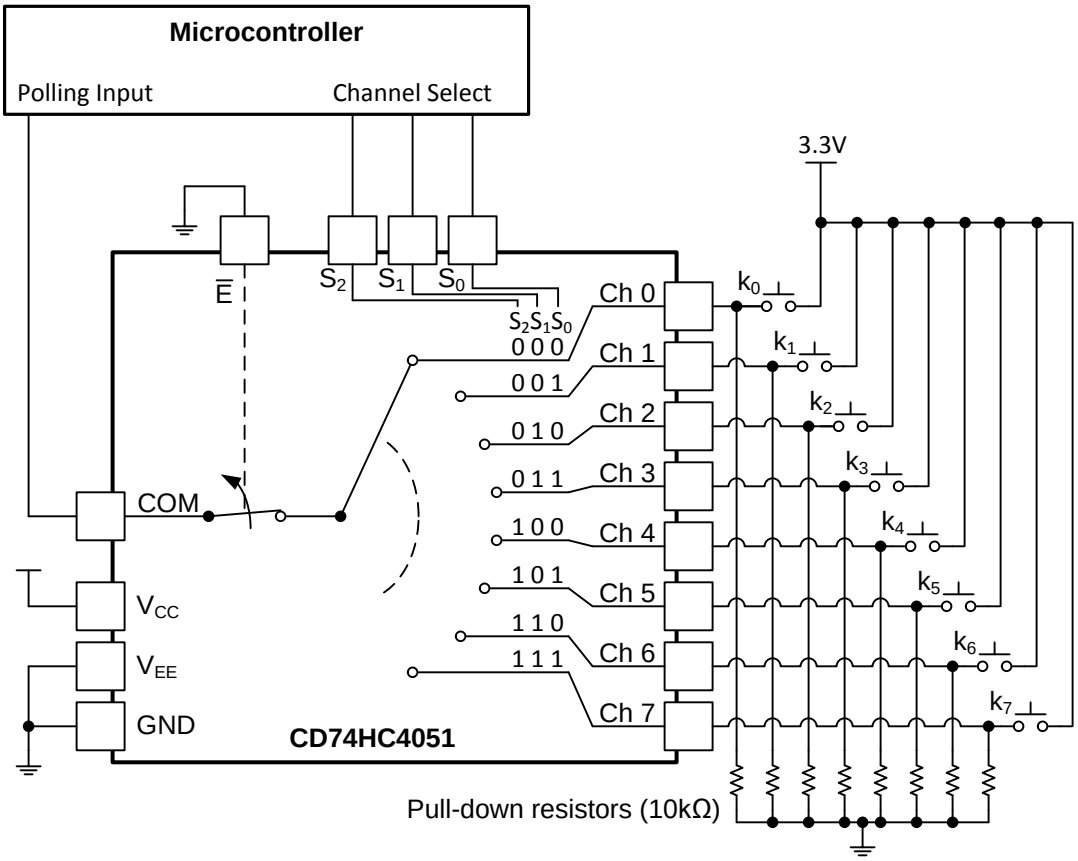

Figure 20. CD74HC4051 Being Used to Help Read Button Presses on a Keypad

9.2.1 Design Requirements

These devices use CMOS technology and have balanced output drive. Take care to avoid bus contention because it can drive currents that would exceed maximum limits. The high drive will also create fast edges into light loads, so routing and load conditions must be considered to prevent ringing.

Typical Application (continued)

See Table 4 for the input loading details.

Table 4. HCT Input Loading Table

TYPE	INPUT	UNIT LOADS (1)
4051, 4053	All	0.5
4052	All	0.4

(1) Unit load is ΔI_{CC} limit specified in *Specifications*, for example, 360-mA MAX at 25°C.

9.2.2 Detailed Design Procedure

1. Recommended input conditions:
   – For switch time specifications, see propagation delay times in *Electrical Characteristics: HC Devices*.
   – Inputs must not be pushed more than 0.5 V above V_{DD} or below V_{EE}.
   – For input voltage level specifications for control inputs, see V_{IH} and V_{IL} in *Electrical Characteristics: HC Devices*.
2. Recommended output conditions:
   – Outputs must not be pulled above V_{DD} or below V_{EE}.
3. Input and output current consideration:
   – The CDx4HCx405x series of parts do not have internal current-drive circuitry, and thus cannot sink or source current. Any current will be passed through the device.

9.2.3 Application Curve

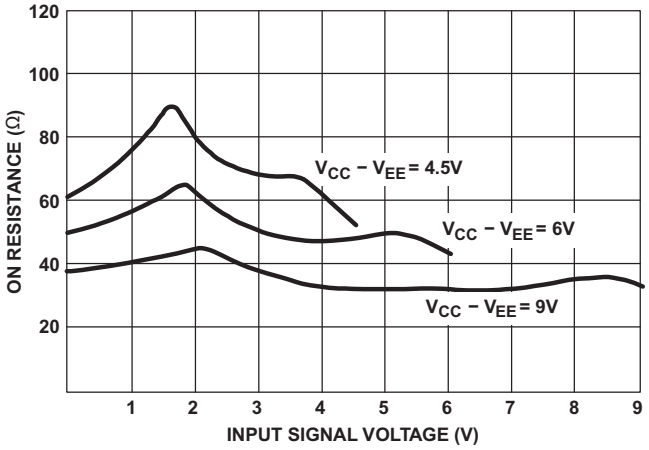

Figure 21. Typical ON Resistance vs Input Signal Voltage

10 Power Supply Recommendations

The power supply can be any voltage between the minimum and maximum supply voltage rating located in the *Electrical Characteristics: HC Devices*.

Each V_{CC} terminal must have a good bypass capacitor to prevent power disturbance. For devices with a single supply, a 0.1-µF bypass capacitor is recommended. If there are multiple pins labeled V_{CC}, then a 0.01-µF or 0.022-µF capacitor is recommended for each V_{CC} because the V_{CC} pins will be tied together internally. For devices with dual-supply pins operating at different voltages, for example V_{CC} and V_{DD}, a 0.1-µF bypass capacitor is recommended for each supply pin. It is acceptable to parallel multiple bypass capacitors to reject different frequencies of noise. A 0.1-µF and a 1-µF capacitor are commonly used in parallel. For best results, the bypass capacitor or capacitors must be installed as close as possible to the power terminal.

Copyright © 1997–2019, Texas Instruments Incorporated

11 Layout

11.1 Layout Guidelines

Reflections and matching are closely related to loop antenna theory, but different enough to warrant their own discussion. When a PCB trace turns a corner at a 90° angle, a reflection can occur. This is primarily due to the change in width of the trace. At the apex of the turn, the trace width is increased to 1.414 times its width. This change in width upsets the transmission line characteristics, especially the distributed capacitance and self-inductance of the trace, thus resulting in the reflection. Not all PCB traces can be straight, so they will have to turn corners. Figure 22 shows progressively better techniques of rounding corners. Only the last example (BEST) maintains constant trace width and minimizes reflections.

11.2 Layout Example

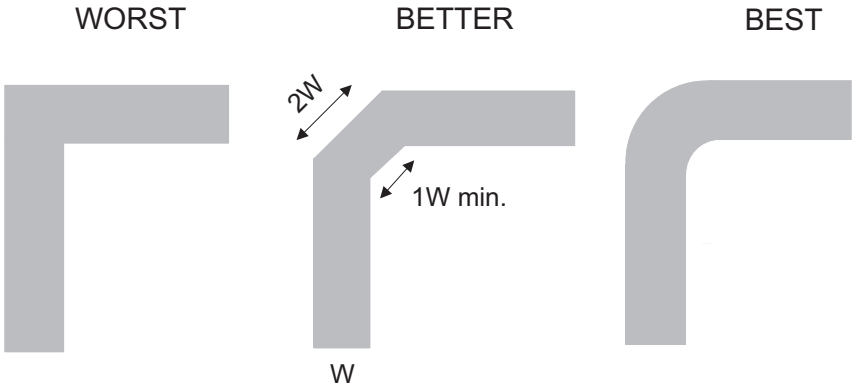

Figure 22. Trace Example

12 器件和文档支持

12.1 文档支持

12.1.1 相关文档

请参阅如下相关文档：

《慢速或浮点 CMOS 输入的影响》，SCBA004

12.2 相关链接

下表列出了快速访问链接。类别包括技术文档、支持与社区资源、工具和软件，以及申请样片或购买产品的快速链接。

表 **5.** 相关链接

器件	产品文件夹	样片与购买	技术文档	工具与软件	支持和社区
CD54HC4051	单击此处	单击此处	单击此处	单击此处	单击此处
CD74HC4051	单击此处	单击此处	单击此处	单击此处	单击此处
CD54HCT4051	单击此处	单击此处	单击此处	单击此处	单击此处
CD74HCT4051	单击此处	单击此处	单击此处	单击此处	单击此处
CD54HC4052	单击此处	单击此处	单击此处	单击此处	单击此处
CD74HC4052	单击此处	单击此处	单击此处	单击此处	单击此处
CD54HCT4052	单击此处	单击此处	单击此处	单击此处	单击此处
CD74HCT4052	单击此处	单击此处	单击此处	单击此处	单击此处
CD54HC4053	单击此处	单击此处	单击此处	单击此处	单击此处
CD74HC4053	单击此处	单击此处	单击此处	单击此处	单击此处
CD54HCT4053	单击此处	单击此处	单击此处	单击此处	单击此处
CD74HCT4053	单击此处	单击此处	单击此处	单击此处	单击此处

12.3 接收文档更新通知

要接收文档更新通知，请导航至 TI.com.cn 上的器件产品文件夹。单击右上角的*通知我* 进行注册，即可每周接收产品信息更改摘要。有关更改的详细信息，请查看任何已修订文档中包含的修订历史记录。

12.4 社区资源

The following links connect to TI community resources. Linked contents are provided "AS IS" by the respective contributors. They do not constitute TI specifications and do not necessarily reflect TI's views; see TI's Terms of Use.

TI E2E™ Online Community ***TI's Engineer-to-Engineer (E2E) Community.*** Created to foster collaboration among engineers. At e2e.ti.com, you can ask questions, share knowledge, explore ideas and help solve problems with fellow engineers.

Design Support ***TI's Design Support*** Quickly find helpful E2E forums along with design support tools and contact information for technical support.

12.5 商标

E2E is a trademark of Texas Instruments.
All other trademarks are the property of their respective owners.

12.6 静电放电警告

这些装置包含有限的内置 ESD 保护。 存储或装卸时，应将导线一起截短或将装置放置于导电泡棉中，以防止 MOS 门极遭受静电损伤。

版权 © 1997–2019, Texas Instruments Incorporated

12.7 Glossary

SLYZ022 — *TI Glossary*.

This glossary lists and explains terms, acronyms, and definitions.

13 机械、封装和可订购信息

以下页面包含机械、封装和可订购信息。这些信息是指定器件的最新可用数据。数据如有变更，恕不另行通知，且不会对此文档进行修订。如需获取此数据表的浏览器版本，请查阅左侧的导航栏。

PACKAGING INFORMATION

Orderable Device	Status (1)	Package Type	Package Drawing	Pins	Package Qty	Eco Plan (2)	Lead finish/ Ball material (6)	MSL Peak Temp (3)	Op Temp (°C)	Device Marking (4/5)	Samples
5962-8775401EA	ACTIVE	CDIP	J	16	1	Non-RoHS & Green	SNPB	N / A for Pkg Type	-55 to 125	5962-8775401EA CD54HC4053F3A	Samples
5962-8855601EA	ACTIVE	CDIP	J	16	1	Non-RoHS & Green	SNPB	N / A for Pkg Type	-55 to 125	5962-8855601EA CD54HC4052F3A	Samples
5962-9065401MEA	ACTIVE	CDIP	J	16	1	Non-RoHS & Green	SNPB	N / A for Pkg Type	-55 to 125	5962-9065401ME A CD54HCT4051F3A	Samples
CD54HC4051F	ACTIVE	CDIP	J	16	1	Non-RoHS & Green	SNPB	N / A for Pkg Type	-55 to 125	CD54HC4051F	Samples
CD54HC4051F3A	ACTIVE	CDIP	J	16	1	Non-RoHS & Green	SNPB	N / A for Pkg Type	-55 to 125	CD54HC4051F3A	Samples
CD54HC4052F	ACTIVE	CDIP	J	16	1	Non-RoHS & Green	SNPB	N / A for Pkg Type	-55 to 125	CD54HC4052F	Samples
CD54HC4052F3A	ACTIVE	CDIP	J	16	1	Non-RoHS & Green	SNPB	N / A for Pkg Type	-55 to 125	5962-8855601EA CD54HC4052F3A	Samples
CD54HC4053F	ACTIVE	CDIP	J	16	1	Non-RoHS & Green	SNPB	N / A for Pkg Type	-55 to 125	CD54HC4053F	Samples
CD54HC4053F3A	ACTIVE	CDIP	J	16	1	Non-RoHS & Green	SNPB	N / A for Pkg Type	-55 to 125	5962-8775401EA CD54HC4053F3A	Samples
CD54HCT4051F3A	ACTIVE	CDIP	J	16	1	Non-RoHS & Green	SNPB	N / A for Pkg Type	-55 to 125	5962-9065401ME A CD54HCT4051F3A	Samples
CD74HC4051E	ACTIVE	PDIP	N	16	25	RoHS & Green	NIPDAU	N / A for Pkg Type	-55 to 125	CD74HC4051E	Samples
CD74HC4051EE4	ACTIVE	PDIP	N	16	25	RoHS & Green	NIPDAU	N / A for Pkg Type	-55 to 125	CD74HC4051E	Samples
CD74HC4051M	ACTIVE	SOIC	D	16	40	RoHS & Green	NIPDAU	Level-1-260C-UNLIM	-55 to 125	HC4051M	Samples
CD74HC4051M96	ACTIVE	SOIC	D	16	2500	RoHS & Green	NIPDAU | SN	Level-1-260C-UNLIM	-55 to 125	HC4051M	Samples
CD74HC4051M96E4	ACTIVE	SOIC	D	16	2500	RoHS & Green	NIPDAU	Level-1-260C-UNLIM	-55 to 125	HC4051M	Samples
CD74HC4051M96G3	ACTIVE	SOIC	D	16	2500	RoHS & Green	SN	Level-1-260C-UNLIM	-55 to 125	HC4051M	Samples
CD74HC4051M96G4	ACTIVE	SOIC	D	16	2500	RoHS & Green	NIPDAU	Level-1-260C-UNLIM	-55 to 125	HC4051M	Samples

Orderable Device	Status (1)	Package Type	Package Drawing	Pins	Package Qty	Eco Plan (2)	Lead finish/ Ball material (6)	MSL Peak Temp (3)	Op Temp (°C)	Device Marking (4/5)	Samples
CD74HC4051ME4	ACTIVE	SOIC	D	16	40	RoHS & Green	NIPDAU	Level-1-260C-UNLIM	-55 to 125	HC4051M	Samples
CD74HC4051MT	ACTIVE	SOIC	D	16	250	RoHS & Green	NIPDAU	Level-1-260C-UNLIM	-55 to 125	HC4051M	Samples
CD74HC4051NSR	ACTIVE	SO	NS	16	2000	RoHS & Green	NIPDAU	Level-1-260C-UNLIM	-55 to 125	HC4051M	Samples
CD74HC4051NSRE4	ACTIVE	SO	NS	16	2000	RoHS & Green	NIPDAU	Level-1-260C-UNLIM	-55 to 125	HC4051M	Samples
CD74HC4051PWR	ACTIVE	TSSOP	PW	16	2000	RoHS & Green	NIPDAU | SN	Level-1-260C-UNLIM	-55 to 125	HJ4051	Samples
CD74HC4051PWRG4	ACTIVE	TSSOP	PW	16	2000	RoHS & Green	NIPDAU	Level-1-260C-UNLIM	-55 to 125	HJ4051	Samples
CD74HC4051PWT	ACTIVE	TSSOP	PW	16	250	RoHS & Green	NIPDAU	Level-1-260C-UNLIM	-55 to 125	HJ4051	Samples
CD74HC4051PWTG4	ACTIVE	TSSOP	PW	16	250	RoHS & Green	NIPDAU	Level-1-260C-UNLIM	-55 to 125	HJ4051	Samples
CD74HC4052E	ACTIVE	PDIP	N	16	25	RoHS & Green	NIPDAU	N / A for Pkg Type	-55 to 125	CD74HC4052E	Samples
CD74HC4052M	ACTIVE	SOIC	D	16	40	RoHS & Green	NIPDAU	Level-1-260C-UNLIM	-55 to 125	HC4052M	Samples
CD74HC4052M96	ACTIVE	SOIC	D	16	2500	RoHS & Green	NIPDAU | SN	Level-1-260C-UNLIM	-55 to 125	HC4052M	Samples
CD74HC4052M96E4	ACTIVE	SOIC	D	16	2500	RoHS & Green	NIPDAU	Level-1-260C-UNLIM	-55 to 125	HC4052M	Samples
CD74HC4052M96G4	ACTIVE	SOIC	D	16	2500	RoHS & Green	NIPDAU	Level-1-260C-UNLIM	-55 to 125	HC4052M	Samples
CD74HC4052MT	ACTIVE	SOIC	D	16	250	RoHS & Green	NIPDAU	Level-1-260C-UNLIM	-55 to 125	HC4052M	Samples
CD74HC4052NSR	ACTIVE	SO	NS	16	2000	RoHS & Green	NIPDAU	Level-1-260C-UNLIM	-55 to 125	HC4052M	Samples
CD74HC4052NSRG4	ACTIVE	SO	NS	16	2000	RoHS & Green	NIPDAU	Level-1-260C-UNLIM	-55 to 125	HC4052M	Samples
CD74HC4052PW	ACTIVE	TSSOP	PW	16	90	RoHS & Green	NIPDAU	Level-1-260C-UNLIM	-55 to 125	HJ4052	Samples
CD74HC4052PWR	ACTIVE	TSSOP	PW	16	2000	RoHS & Green	NIPDAU | SN	Level-1-260C-UNLIM	-55 to 125	HJ4052	Samples
CD74HC4052PWRG4	ACTIVE	TSSOP	PW	16	2000	RoHS & Green	NIPDAU	Level-1-260C-UNLIM	-55 to 125	HJ4052	Samples
CD74HC4052PWT	ACTIVE	TSSOP	PW	16	250	RoHS & Green	NIPDAU	Level-1-260C-UNLIM	-55 to 125	HJ4052	Samples
CD74HC4053E	ACTIVE	PDIP	N	16	25	RoHS & Green	NIPDAU	N / A for Pkg Type	-55 to 125	CD74HC4053E	Samples

Orderable Device	Status (1)	Package Type	Package Drawing	Pins	Package Qty	Eco Plan (2)	Lead finish/ Ball material (6)	MSL Peak Temp (3)	Op Temp (°C)	Device Marking (4/5)	Samples
CD74HC4053EE4	ACTIVE	PDIP	N	16	25	RoHS & Green	NIPDAU	N / A for Pkg Type	-55 to 125	CD74HC4053E	Samples
CD74HC4053M	ACTIVE	SOIC	D	16	40	RoHS & Green	NIPDAU	Level-1-260C-UNLIM	-55 to 125	HC4053M	Samples
CD74HC4053M96	ACTIVE	SOIC	D	16	2500	RoHS & Green	NIPDAU | SN	Level-1-260C-UNLIM	-55 to 125	HC4053M	Samples
CD74HC4053M96G3	ACTIVE	SOIC	D	16	2500	RoHS & Green	SN	Level-1-260C-UNLIM	-55 to 125	HC4053M	Samples
CD74HC4053M96G4	ACTIVE	SOIC	D	16	2500	RoHS & Green	NIPDAU	Level-1-260C-UNLIM	-55 to 125	HC4053M	Samples
CD74HC4053ME4	ACTIVE	SOIC	D	16	40	RoHS & Green	NIPDAU	Level-1-260C-UNLIM	-55 to 125	HC4053M	Samples
CD74HC4053MG4	ACTIVE	SOIC	D	16	40	RoHS & Green	NIPDAU	Level-1-260C-UNLIM	-55 to 125	HC4053M	Samples
CD74HC4053MT	ACTIVE	SOIC	D	16	250	RoHS & Green	NIPDAU	Level-1-260C-UNLIM	-55 to 125	HC4053M	Samples
CD74HC4053NSR	ACTIVE	SO	NS	16	2000	RoHS & Green	NIPDAU	Level-1-260C-UNLIM	-55 to 125	HC4053M	Samples
CD74HC4053PW	ACTIVE	TSSOP	PW	16	90	RoHS & Green	NIPDAU	Level-1-260C-UNLIM	-55 to 125	HJ4053	Samples
CD74HC4053PWR	ACTIVE	TSSOP	PW	16	2000	RoHS & Green	NIPDAU | SN	Level-1-260C-UNLIM	-55 to 125	HJ4053	Samples
CD74HC4053PWRG4	ACTIVE	TSSOP	PW	16	2000	RoHS & Green	NIPDAU	Level-1-260C-UNLIM	-55 to 125	HJ4053	Samples
CD74HC4053PWT	ACTIVE	TSSOP	PW	16	250	RoHS & Green	NIPDAU	Level-1-260C-UNLIM	-55 to 125	HJ4053	Samples
CD74HCT4051E	ACTIVE	PDIP	N	16	25	RoHS & Green	NIPDAU	N / A for Pkg Type	-55 to 125	CD74HCT4051E	Samples
CD74HCT4051M	ACTIVE	SOIC	D	16	40	RoHS & Green	NIPDAU	Level-1-260C-UNLIM	-55 to 125	HCT4051M	Samples
CD74HCT4051M96	ACTIVE	SOIC	D	16	2500	RoHS & Green	NIPDAU	Level-1-260C-UNLIM	-55 to 125	HCT4051M	Samples
CD74HCT4051M96E4	ACTIVE	SOIC	D	16	2500	RoHS & Green	NIPDAU	Level-1-260C-UNLIM	-55 to 125	HCT4051M	Samples
CD74HCT4051M96G4	ACTIVE	SOIC	D	16	2500	RoHS & Green	NIPDAU	Level-1-260C-UNLIM	-55 to 125	HCT4051M	Samples
CD74HCT4051ME4	ACTIVE	SOIC	D	16	40	RoHS & Green	NIPDAU	Level-1-260C-UNLIM	-55 to 125	HCT4051M	Samples
CD74HCT4051MG4	ACTIVE	SOIC	D	16	40	RoHS & Green	NIPDAU	Level-1-260C-UNLIM	-55 to 125	HCT4051M	Samples
CD74HCT4051MT	ACTIVE	SOIC	D	16	250	RoHS & Green	NIPDAU	Level-1-260C-UNLIM	-55 to 125	HCT4051M	Samples

Orderable Device	Status (1)	Package Type	Package Drawing	Pins	Package Qty	Eco Plan (2)	Lead finish/ Ball material (6)	MSL Peak Temp (3)	Op Temp (°C)	Device Marking (4/5)	Samples
CD74HCT4051MTG4	ACTIVE	SOIC	D	16	250	RoHS & Green	NIPDAU	Level-1-260C-UNLIM	-55 to 125	HCT4051M	Samples
CD74HCT4052E	ACTIVE	PDIP	N	16	25	RoHS & Green	NIPDAU	N / A for Pkg Type	-55 to 125	CD74HCT4052E	Samples
CD74HCT4052M	ACTIVE	SOIC	D	16	40	RoHS & Green	NIPDAU	Level-1-260C-UNLIM	-55 to 125	HCT4052M	Samples
CD74HCT4052M96	ACTIVE	SOIC	D	16	2500	RoHS & Green	NIPDAU	Level-1-260C-UNLIM	-55 to 125	HCT4052M	Samples
CD74HCT4052M96G4	ACTIVE	SOIC	D	16	2500	RoHS & Green	NIPDAU	Level-1-260C-UNLIM	-55 to 125	HCT4052M	Samples
CD74HCT4052ME4	ACTIVE	SOIC	D	16	40	RoHS & Green	NIPDAU	Level-1-260C-UNLIM	-55 to 125	HCT4052M	Samples
CD74HCT4052MG4	ACTIVE	SOIC	D	16	40	RoHS & Green	NIPDAU	Level-1-260C-UNLIM	-55 to 125	HCT4052M	Samples
CD74HCT4052MT	ACTIVE	SOIC	D	16	250	RoHS & Green	NIPDAU	Level-1-260C-UNLIM	-55 to 125	HCT4052M	Samples
CD74HCT4053E	ACTIVE	PDIP	N	16	25	RoHS & Green	NIPDAU	N / A for Pkg Type	-55 to 125	CD74HCT4053E	Samples
CD74HCT4053M	ACTIVE	SOIC	D	16	40	RoHS & Green	NIPDAU	Level-1-260C-UNLIM	-55 to 125	HCT4053M	Samples
CD74HCT4053M96	ACTIVE	SOIC	D	16	2500	RoHS & Green	NIPDAU	Level-1-260C-UNLIM	-55 to 125	HCT4053M	Samples
CD74HCT4053M96E4	ACTIVE	SOIC	D	16	2500	RoHS & Green	NIPDAU	Level-1-260C-UNLIM	-55 to 125	HCT4053M	Samples
CD74HCT4053M96G4	ACTIVE	SOIC	D	16	2500	RoHS & Green	NIPDAU	Level-1-260C-UNLIM	-55 to 125	HCT4053M	Samples
CD74HCT4053ME4	ACTIVE	SOIC	D	16	40	RoHS & Green	NIPDAU	Level-1-260C-UNLIM	-55 to 125	HCT4053M	Samples
CD74HCT4053MT	ACTIVE	SOIC	D	16	250	RoHS & Green	NIPDAU	Level-1-260C-UNLIM	-55 to 125	HCT4053M	Samples
CD74HCT4053PWR	ACTIVE	TSSOP	PW	16	2000	RoHS & Green	NIPDAU | SN	Level-1-260C-UNLIM	-55 to 125	HK4053	Samples
CD74HCT4053PWRE4	ACTIVE	TSSOP	PW	16	2000	RoHS & Green	NIPDAU	Level-1-260C-UNLIM	-55 to 125	HK4053	Samples
CD74HCT4053PWRG4	ACTIVE	TSSOP	PW	16	2000	RoHS & Green	NIPDAU	Level-1-260C-UNLIM	-55 to 125	HK4053	Samples
CD74HCT4053PWT	ACTIVE	TSSOP	PW	16	250	RoHS & Green	NIPDAU	Level-1-260C-UNLIM	-55 to 125	HK4053	Samples

(1) The marketing status values are defined as follows:
ACTIVE: Product device recommended for new designs.
LIFEBUY: TI has announced that the device will be discontinued, and a lifetime-buy period is in effect.

NRND: Not recommended for new designs. Device is in production to support existing customers, but TI does not recommend using this part in a new design.
PREVIEW: Device has been announced but is not in production. Samples may or may not be available.
OBSOLETE: TI has discontinued the production of the device.

(2) **RoHS:** TI defines "RoHS" to mean semiconductor products that are compliant with the current EU RoHS requirements for all 10 RoHS substances, including the requirement that RoHS substance do not exceed 0.1% by weight in homogeneous materials. Where designed to be soldered at high temperatures, "RoHS" products are suitable for use in specified lead-free processes. TI may reference these types of products as "Pb-Free".
RoHS Exempt: TI defines "RoHS Exempt" to mean products that contain lead but are compliant with EU RoHS pursuant to a specific EU RoHS exemption.
Green: TI defines "Green" to mean the content of Chlorine (Cl) and Bromine (Br) based flame retardants meet JS709B low halogen requirements of <=1000ppm threshold. Antimony trioxide based flame retardants must also meet the <=1000ppm threshold requirement.

(3) MSL, Peak Temp. - The Moisture Sensitivity Level rating according to the JEDEC industry standard classifications, and peak solder temperature.

(4) There may be additional marking, which relates to the logo, the lot trace code information, or the environmental category on the device.

(5) Multiple Device Markings will be inside parentheses. Only one Device Marking contained in parentheses and separated by a "~" will appear on a device. If a line is indented then it is a continuation of the previous line and the two combined represent the entire Device Marking for that device.

(6) Lead finish/Ball material - Orderable Devices may have multiple material finish options. Finish options are separated by a vertical ruled line. Lead finish/Ball material values may wrap to two lines if the finish value exceeds the maximum column width.

Important Information and Disclaimer: The information provided on this page represents TI's knowledge and belief as of the date that it is provided. TI bases its knowledge and belief on information provided by third parties, and makes no representation or warranty as to the accuracy of such information. Efforts are underway to better integrate information from third parties. TI has taken and continues to take reasonable steps to provide representative and accurate information but may not have conducted destructive testing or chemical analysis on incoming materials and chemicals. TI and TI suppliers consider certain information to be proprietary, and thus CAS numbers and other limited information may not be available for release.

In no event shall TI's liability arising out of such information exceed the total purchase price of the TI part(s) at issue in this document sold by TI to Customer on an annual basis.

OTHER QUALIFIED VERSIONS OF CD54HC4051, CD54HC4052, CD54HC4053, CD54HCT4051, CD74HC4051, CD74HC4052, CD74HC4053, CD74HCT4051 :

- Catalog : CD74HC4051, CD74HC4052, CD74HC4053, CD74HCT4051
- Automotive : CD74HC4051-Q1, CD74HCT4051-Q1, CD74HC4051-Q1, CD74HCT4051-Q1
- Enhanced Product : CD74HC4051-EP, CD74HC4051-EP
- Military : CD54HC4051, CD54HC4052, CD54HC4053, CD54HCT4051

NOTE: Qualified Version Definitions:

- Catalog - TI's standard catalog product
- Automotive - Q100 devices qualified for high-reliability automotive applications targeting zero defects
- Enhanced Product - Supports Defense, Aerospace and Medical Applications
- Military - QML certified for Military and Defense Applications

TAPE AND REEL INFORMATION

REEL DIMENSIONS

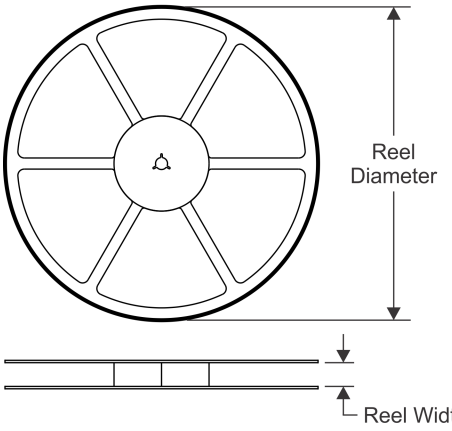

TAPE DIMENSIONS

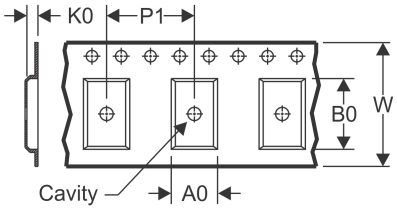

A0	Dimension designed to accommodate the component width
B0	Dimension designed to accommodate the component length
K0	Dimension designed to accommodate the component thickness
W	Overall width of the carrier tape
P1	Pitch between successive cavity centers

QUADRANT ASSIGNMENTS FOR PIN 1 ORIENTATION IN TAPE

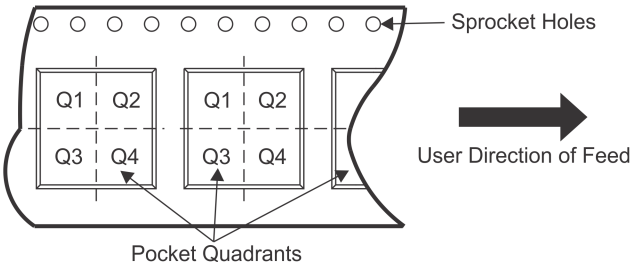

*All dimensions are nominal

Device	Package Type	Package Drawing	Pins	SPQ	Reel Diameter (mm)	Reel Width W1 (mm)	A0 (mm)	B0 (mm)	K0 (mm)	P1 (mm)	W (mm)	Pin1 Quadrant
CD74HC4051M96	SOIC	D	16	2500	330.0	16.4	6.5	10.3	2.1	8.0	16.0	Q1
CD74HC4051M96	SOIC	D	16	2500	330.0	16.8	6.5	10.3	2.1	8.0	16.0	Q1
CD74HC4051M96G3	SOIC	D	16	2500	330.0	16.8	6.5	10.3	2.1	8.0	16.0	Q1
CD74HC4051M96G4	SOIC	D	16	2500	330.0	16.4	6.5	10.3	2.1	8.0	16.0	Q1
CD74HC4051NSR	SO	NS	16	2000	330.0	16.4	8.2	10.5	2.5	12.0	16.0	Q1
CD74HC4051PWR	TSSOP	PW	16	2000	330.0	12.4	6.9	5.6	1.6	8.0	12.0	Q1
CD74HC4051PWR	TSSOP	PW	16	2000	330.0	12.4	6.9	5.6	1.6	8.0	12.0	Q1
CD74HC4051PWRG4	TSSOP	PW	16	2000	330.0	12.4	6.9	5.6	1.6	8.0	12.0	Q1
CD74HC4051PWT	TSSOP	PW	16	250	330.0	12.4	6.9	5.6	1.6	8.0	12.0	Q1
CD74HC4052M96	SOIC	D	16	2500	330.0	16.4	6.5	10.3	2.1	8.0	16.0	Q1
CD74HC4052M96	SOIC	D	16	2500	330.0	16.8	6.5	10.3	2.1	8.0	16.0	Q1
CD74HC4052M96G4	SOIC	D	16	2500	330.0	16.4	6.5	10.3	2.1	8.0	16.0	Q1
CD74HC4052NSR	SO	NS	16	2000	330.0	16.4	8.2	10.5	2.5	12.0	16.0	Q1
CD74HC4052PWR	TSSOP	PW	16	2000	330.0	12.4	6.9	5.6	1.6	8.0	12.0	Q1
CD74HC4052PWR	TSSOP	PW	16	2000	330.0	12.4	6.9	5.6	1.6	8.0	12.0	Q1
CD74HC4052PWRG4	TSSOP	PW	16	2000	330.0	12.4	6.9	5.6	1.6	8.0	12.0	Q1
CD74HC4052PWT	TSSOP	PW	16	250	330.0	12.4	6.9	5.6	1.6	8.0	12.0	Q1
CD74HC4053M96	SOIC	D	16	2500	330.0	16.8	6.5	10.3	2.1	8.0	16.0	Q1

Device	Package Type	Package Drawing	Pins	SPQ	Reel Diameter (mm)	Reel Width W1 (mm)	A0 (mm)	B0 (mm)	K0 (mm)	P1 (mm)	W (mm)	Pin1 Quadrant
CD74HC4053M96	SOIC	D	16	2500	330.0	16.4	6.5	10.3	2.1	8.0	16.0	Q1
CD74HC4053M96G3	SOIC	D	16	2500	330.0	16.8	6.5	10.3	2.1	8.0	16.0	Q1
CD74HC4053M96G4	SOIC	D	16	2500	330.0	16.4	6.5	10.3	2.1	8.0	16.0	Q1
CD74HC4053NSR	SO	NS	16	2000	330.0	16.4	8.2	10.5	2.5	12.0	16.0	Q1
CD74HC4053PWR	TSSOP	PW	16	2000	330.0	12.4	6.9	5.6	1.6	8.0	12.0	Q1
CD74HC4053PWR	TSSOP	PW	16	2000	330.0	12.4	6.9	5.6	1.6	8.0	12.0	Q1
CD74HC4053PWRG4	TSSOP	PW	16	2000	330.0	12.4	6.9	5.6	1.6	8.0	12.0	Q1
CD74HC4053PWT	TSSOP	PW	16	250	330.0	12.4	6.9	5.6	1.6	8.0	12.0	Q1
CD74HCT4051M96	SOIC	D	16	2500	330.0	16.4	6.5	10.3	2.1	8.0	16.0	Q1
CD74HCT4052M96	SOIC	D	16	2500	330.0	16.4	6.5	10.3	2.1	8.0	16.0	Q1
CD74HCT4053M96	SOIC	D	16	2500	330.0	16.4	6.5	10.3	2.1	8.0	16.0	Q1
CD74HCT4053PWR	TSSOP	PW	16	2000	330.0	12.4	6.9	5.6	1.6	8.0	12.0	Q1
CD74HCT4053PWR	TSSOP	PW	16	2000	330.0	12.4	6.9	5.6	1.6	8.0	12.0	Q1
CD74HCT4053PWRG4	TSSOP	PW	16	2000	330.0	12.4	6.9	5.6	1.6	8.0	12.0	Q1
CD74HCT4053PWT	TSSOP	PW	16	250	330.0	12.4	6.9	5.6	1.6	8.0	12.0	Q1

TAPE AND REEL BOX DIMENSIONS

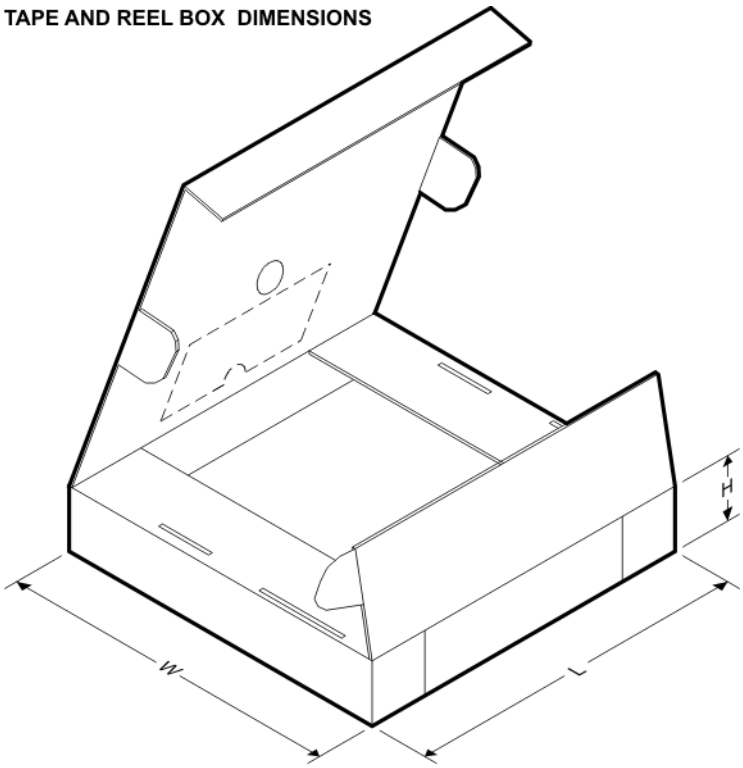

*All dimensions are nominal

Device	Package Type	Package Drawing	Pins	SPQ	Length (mm)	Width (mm)	Height (mm)
CD74HC4051M96	SOIC	D	16	2500	340.5	336.1	32.0
CD74HC4051M96	SOIC	D	16	2500	364.0	364.0	27.0

Device	Package Type	Package Drawing	Pins	SPQ	Length (mm)	Width (mm)	Height (mm)
CD74HC4051M96G3	SOIC	D	16	2500	364.0	364.0	27.0
CD74HC4051M96G4	SOIC	D	16	2500	340.5	336.1	32.0
CD74HC4051NSR	SO	NS	16	2000	367.0	367.0	38.0
CD74HC4051PWR	TSSOP	PW	16	2000	853.0	449.0	35.0
CD74HC4051PWR	TSSOP	PW	16	2000	364.0	364.0	27.0
CD74HC4051PWRG4	TSSOP	PW	16	2000	853.0	449.0	35.0
CD74HC4051PWT	TSSOP	PW	16	250	853.0	449.0	35.0
CD74HC4052M96	SOIC	D	16	2500	340.5	336.1	32.0
CD74HC4052M96	SOIC	D	16	2500	364.0	364.0	27.0
CD74HC4052M96G4	SOIC	D	16	2500	340.5	336.1	32.0
CD74HC4052NSR	SO	NS	16	2000	853.0	449.0	35.0
CD74HC4052PWR	TSSOP	PW	16	2000	364.0	364.0	27.0
CD74HC4052PWR	TSSOP	PW	16	2000	853.0	449.0	35.0
CD74HC4052PWRG4	TSSOP	PW	16	2000	853.0	449.0	35.0
CD74HC4052PWT	TSSOP	PW	16	250	853.0	449.0	35.0
CD74HC4053M96	SOIC	D	16	2500	364.0	364.0	27.0
CD74HC4053M96	SOIC	D	16	2500	340.5	336.1	32.0
CD74HC4053M96G3	SOIC	D	16	2500	364.0	364.0	27.0
CD74HC4053M96G4	SOIC	D	16	2500	340.5	336.1	32.0
CD74HC4053NSR	SO	NS	16	2000	853.0	449.0	35.0
CD74HC4053PWR	TSSOP	PW	16	2000	364.0	364.0	27.0
CD74HC4053PWR	TSSOP	PW	16	2000	853.0	449.0	35.0
CD74HC4053PWRG4	TSSOP	PW	16	2000	853.0	449.0	35.0
CD74HC4053PWT	TSSOP	PW	16	250	853.0	449.0	35.0
CD74HCT4051M96	SOIC	D	16	2500	340.5	336.1	32.0
CD74HCT4052M96	SOIC	D	16	2500	340.5	336.1	32.0
CD74HCT4053M96	SOIC	D	16	2500	340.5	336.1	32.0
CD74HCT4053PWR	TSSOP	PW	16	2000	853.0	449.0	35.0
CD74HCT4053PWR	TSSOP	PW	16	2000	364.0	364.0	27.0
CD74HCT4053PWRG4	TSSOP	PW	16	2000	853.0	449.0	35.0
CD74HCT4053PWT	TSSOP	PW	16	250	853.0	449.0	35.0

TUBE

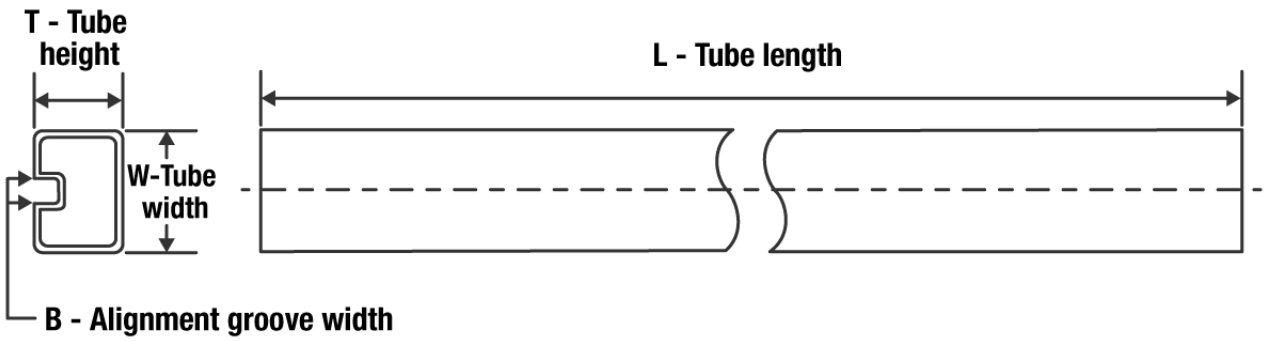

*All dimensions are nominal

Device	Package Name	Package Type	Pins	SPQ	L (mm)	W (mm)	T (µm)	B (mm)
CD74HC4051E	N	PDIP	16	25	506	13.97	11230	4.32
CD74HC4051E	N	PDIP	16	25	506	13.97	11230	4.32
CD74HC4051EE4	N	PDIP	16	25	506	13.97	11230	4.32
CD74HC4051EE4	N	PDIP	16	25	506	13.97	11230	4.32
CD74HC4051M	D	SOIC	16	40	507	8	3940	4.32
CD74HC4051ME4	D	SOIC	16	40	507	8	3940	4.32
CD74HC4052E	N	PDIP	16	25	506	13.97	11230	4.32
CD74HC4052E	N	PDIP	16	25	506	13.97	11230	4.32
CD74HC4052M	D	SOIC	16	40	507	8	3940	4.32
CD74HC4052PW	PW	TSSOP	16	90	530	10.2	3600	3.5
CD74HC4053E	N	PDIP	16	25	506	13.97	11230	4.32
CD74HC4053E	N	PDIP	16	25	506	13.97	11230	4.32
CD74HC4053EE4	N	PDIP	16	25	506	13.97	11230	4.32
CD74HC4053EE4	N	PDIP	16	25	506	13.97	11230	4.32
CD74HC4053M	D	SOIC	16	40	507	8	3940	4.32
CD74HC4053ME4	D	SOIC	16	40	507	8	3940	4.32
CD74HC4053MG4	D	SOIC	16	40	507	8	3940	4.32
CD74HC4053PW	PW	TSSOP	16	90	530	10.2	3600	3.5
CD74HCT4051E	N	PDIP	16	25	506	13.97	11230	4.32
CD74HCT4051E	N	PDIP	16	25	506	13.97	11230	4.32
CD74HCT4051M	D	SOIC	16	40	507	8	3940	4.32
CD74HCT4051ME4	D	SOIC	16	40	507	8	3940	4.32
CD74HCT4051MG4	D	SOIC	16	40	507	8	3940	4.32
CD74HCT4052E	N	PDIP	16	25	506	13.97	11230	4.32
CD74HCT4052E	N	PDIP	16	25	506	13.97	11230	4.32
CD74HCT4052M	D	SOIC	16	40	507	8	3940	4.32
CD74HCT4052ME4	D	SOIC	16	40	507	8	3940	4.32
CD74HCT4052MG4	D	SOIC	16	40	507	8	3940	4.32

Device	Package Name	Package Type	Pins	SPQ	L (mm)	W (mm)	T (µm)	B (mm)
CD74HCT4053E	N	PDIP	16	25	506	13.97	11230	4.32
CD74HCT4053E	N	PDIP	16	25	506	13.97	11230	4.32
CD74HCT4053M	D	SOIC	16	40	507	8	3940	4.32
CD74HCT4053ME4	D	SOIC	16	40	507	8	3940	4.32

J (R–GDIP–T**) CERAMIC DUAL IN–LINE PACKAGE

14 LEADS SHOWN

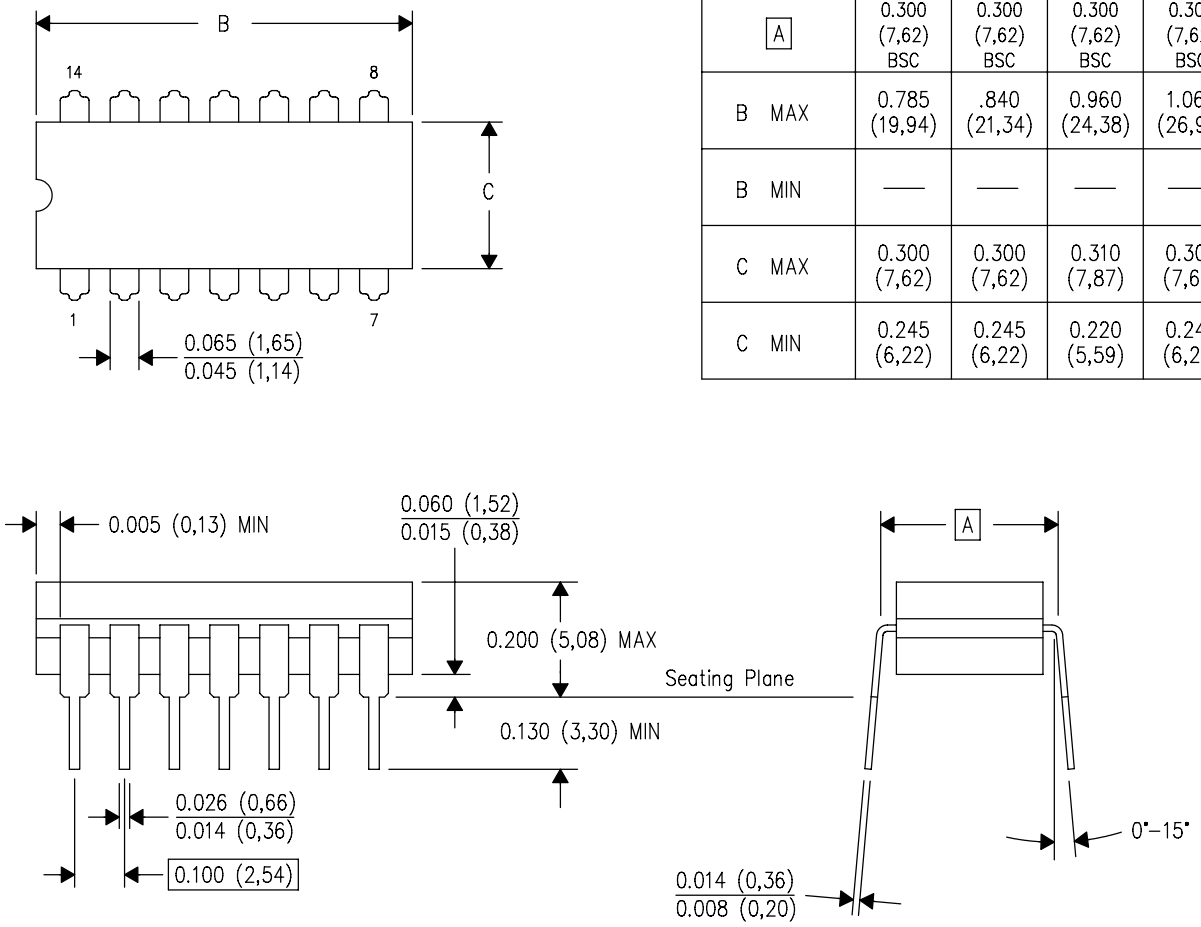

DIM \ PINS **	14	16	18	20
A	0.300 (7,62) BSC	0.300 (7,62) BSC	0.300 (7,62) BSC	0.300 (7,62) BSC
B MAX	0.785 (19,94)	.840 (21,34)	0.960 (24,38)	1.060 (26,92)
B MIN	—	—	—	—
C MAX	0.300 (7,62)	0.300 (7,62)	0.310 (7,87)	0.300 (7,62)
C MIN	0.245 (6,22)	0.245 (6,22)	0.220 (5,59)	0.245 (6,22)

4040083/F 03/03

NOTES:
- A. All linear dimensions are in inches (millimeters).
- B. This drawing is subject to change without notice.
- C. This package is hermetically sealed with a ceramic lid using glass frit.
- D. Index point is provided on cap for terminal identification only on press ceramic glass frit seal only.
- E. Falls within MIL STD 1835 GDIP1–T14, GDIP1–T16, GDIP1–T18 and GDIP1–T20.

N (R–PDIP–T**) PLASTIC DUAL–IN–LINE PACKAGE

16 PINS SHOWN

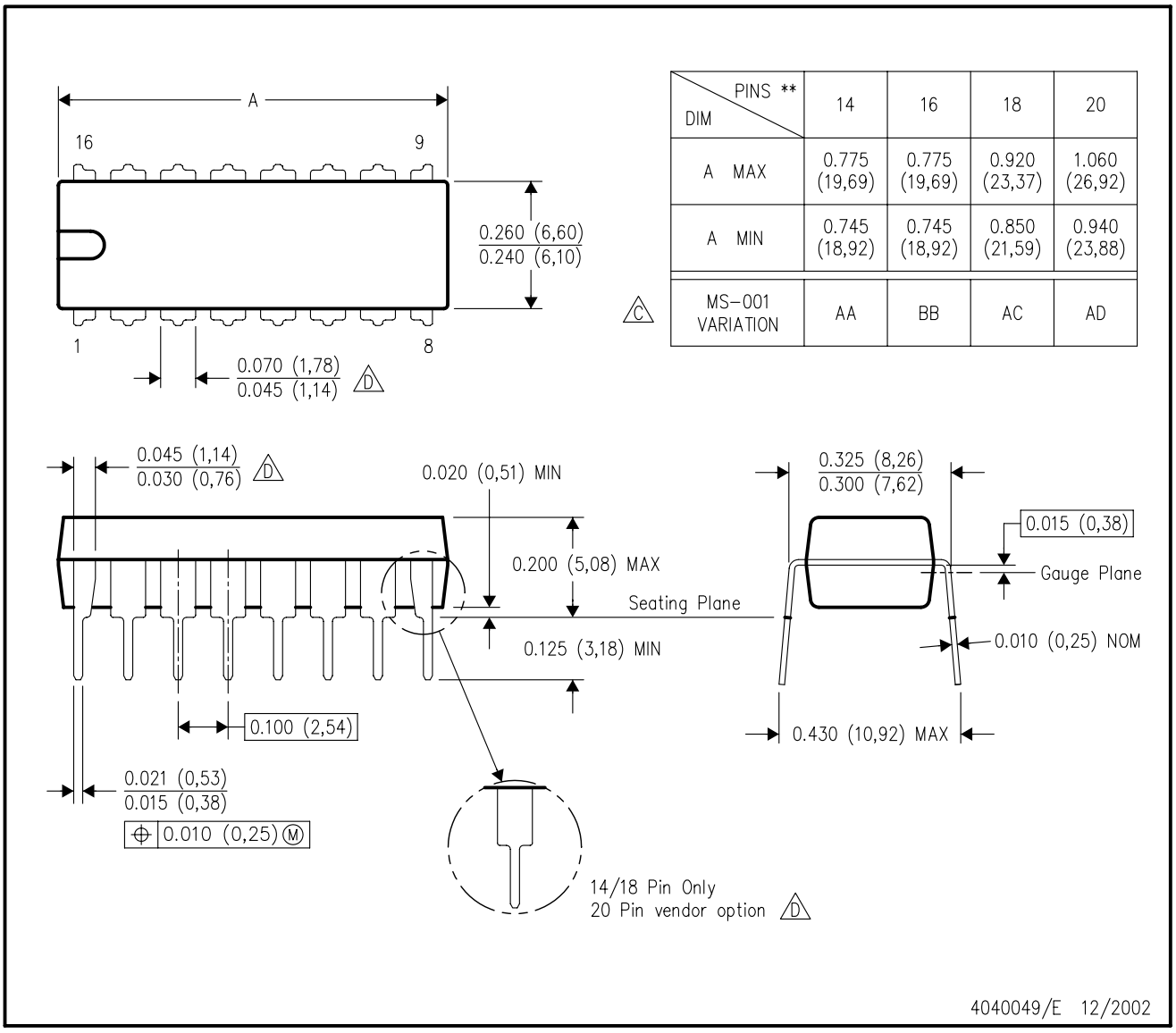

DIM \ PINS **	14	16	18	20
A MAX	0.775 (19,69)	0.775 (19,69)	0.920 (23,37)	1.060 (26,92)
A MIN	0.745 (18,92)	0.745 (18,92)	0.850 (21,59)	0.940 (23,88)
MS–001 VARIATION (C)	AA	BB	AC	AD

NOTES:
A. All linear dimensions are in inches (millimeters).
B. This drawing is subject to change without notice.
C. Falls within JEDEC MS–001, except 18 and 20 pin minimum body length (Dim A).
D. The 20 pin end lead shoulder width is a vendor option, either half or full width.

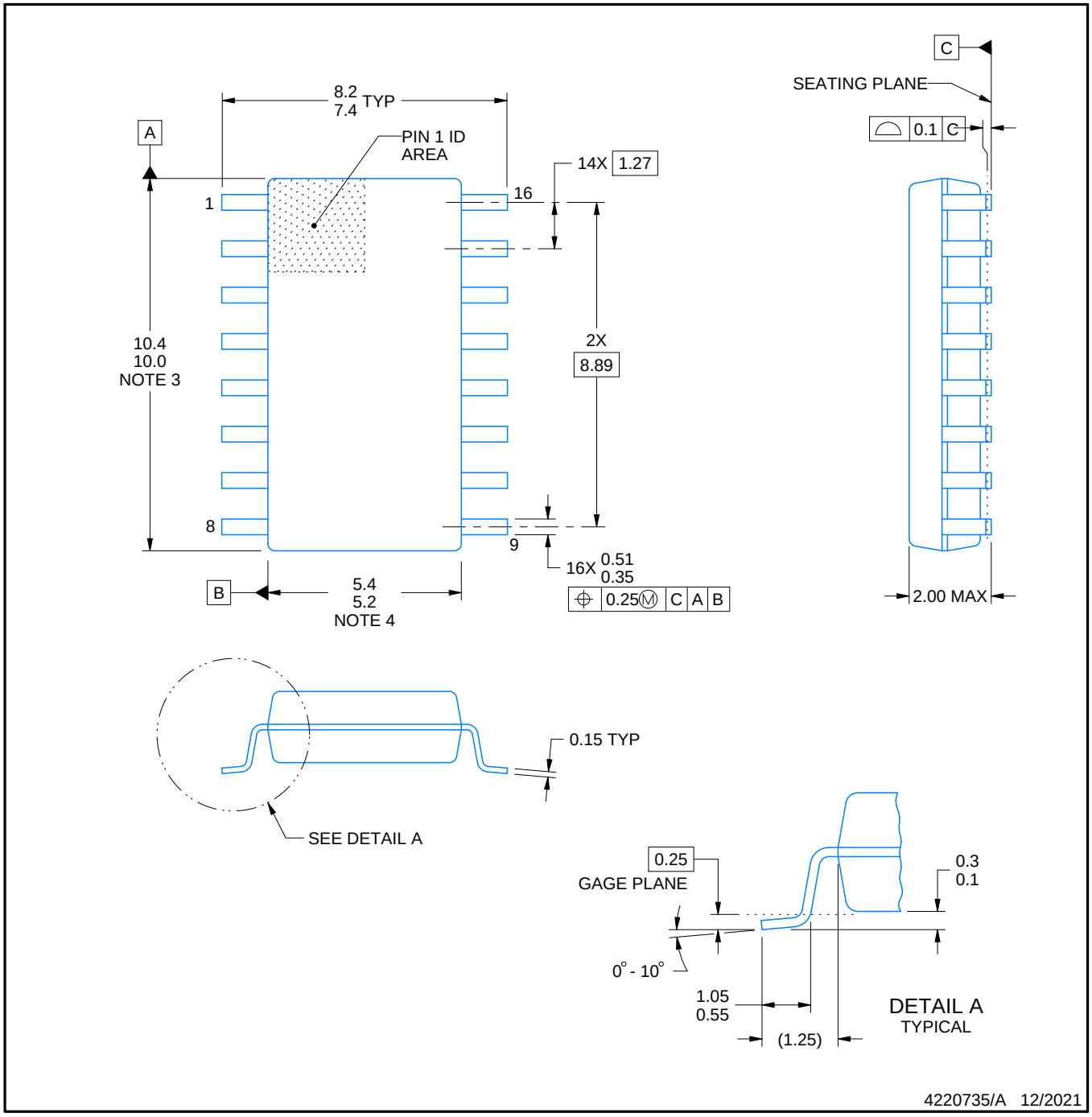

NOTES:

1. All linear dimensions are in millimeters. Dimensions in parenthesis are for reference only. Dimensioning and tolerancing per ASME Y14.5M.
2. This drawing is subject to change without notice.
3. This dimension does not include mold flash, protrusions, or gate burrs. Mold flash, protrusions, or gate burrs shall not exceed 0.15 mm, per side.
4. This dimension does not include interlead flash. Interlead flash shall not exceed 0.25 mm, per side.

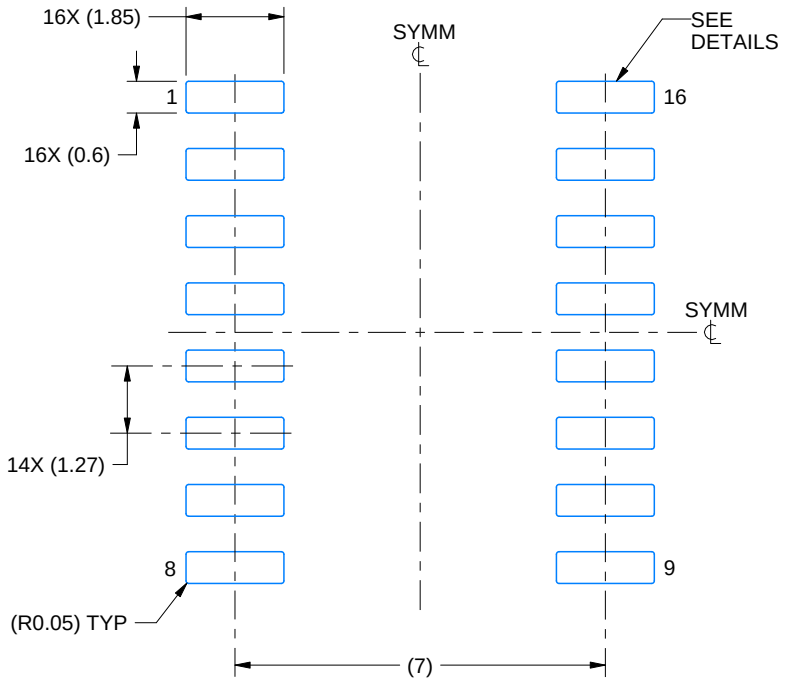

LAND PATTERN EXAMPLE
SCALE:7X

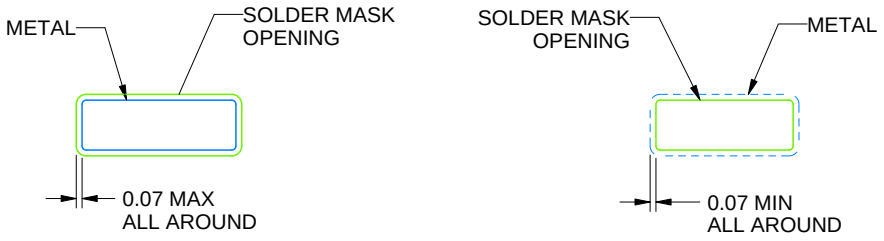

NON SOLDER MASK DEFINED

SOLDER MASK DEFINED

SOLDER MASK DETAILS

4220735/A 12/2021

NOTES: (continued)

5. Publication IPC-7351 may have alternate designs.
6. Solder mask tolerances between and around signal pads can vary based on board fabrication site.

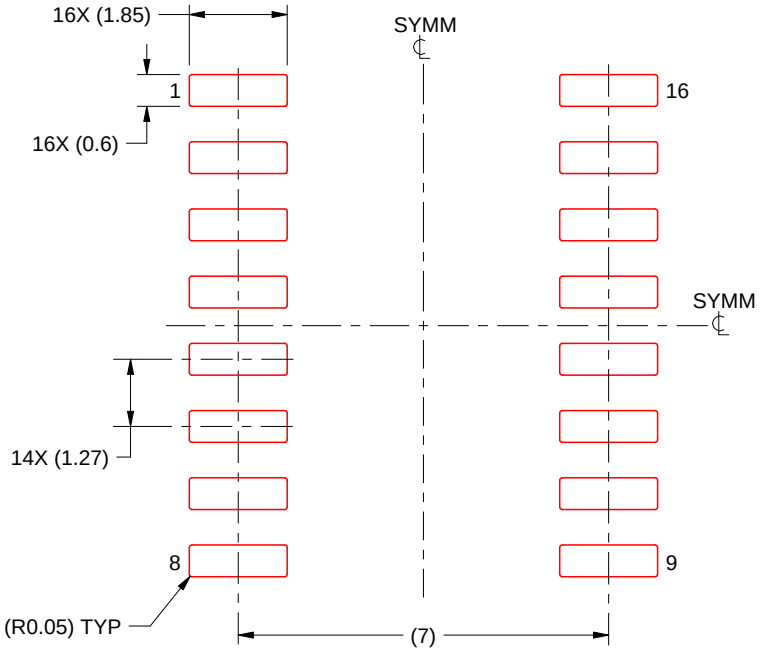

SOLDER PASTE EXAMPLE
BASED ON 0.125 mm THICK STENCIL
SCALE:7X

4220735/A 12/2021

NOTES: (continued)

7. Laser cutting apertures with trapezoidal walls and rounded corners may offer better paste release. IPC-7525 may have alternate design recommendations.
8. Board assembly site may have different recommendations for stencil design.

D (R–PDSO–G16) PLASTIC SMALL OUTLINE

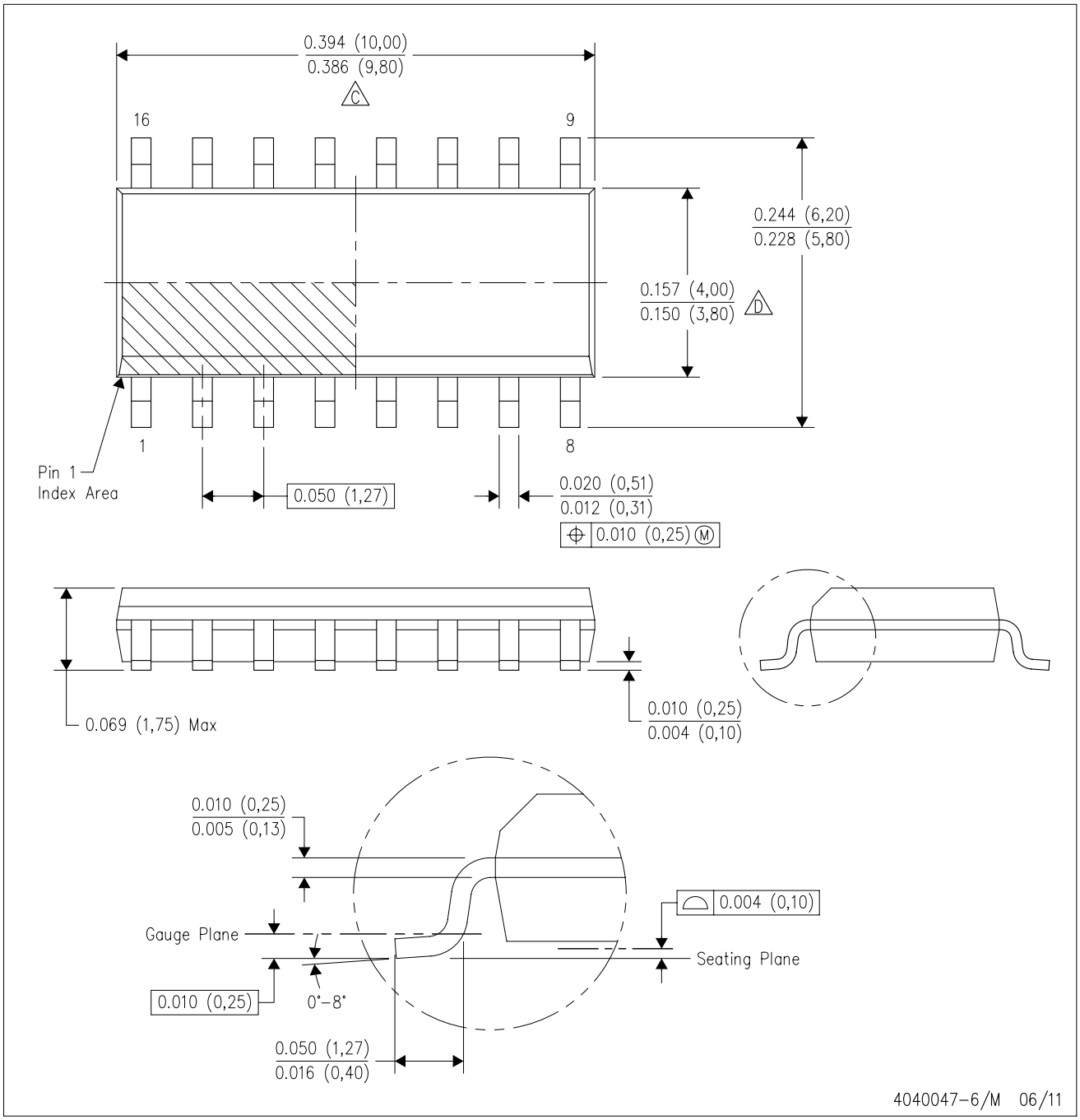

NOTES:
A. All linear dimensions are in inches (millimeters).
B. This drawing is subject to change without notice.
C. Body length does not include mold flash, protrusions, or gate burrs. Mold flash, protrusions, or gate burrs shall not exceed 0.006 (0,15) each side.
D. Body width does not include interlead flash. Interlead flash shall not exceed 0.017 (0,43) each side.
E. Reference JEDEC MS–012 variation AC.

D (R–PDSO–G16) PLASTIC SMALL OUTLINE

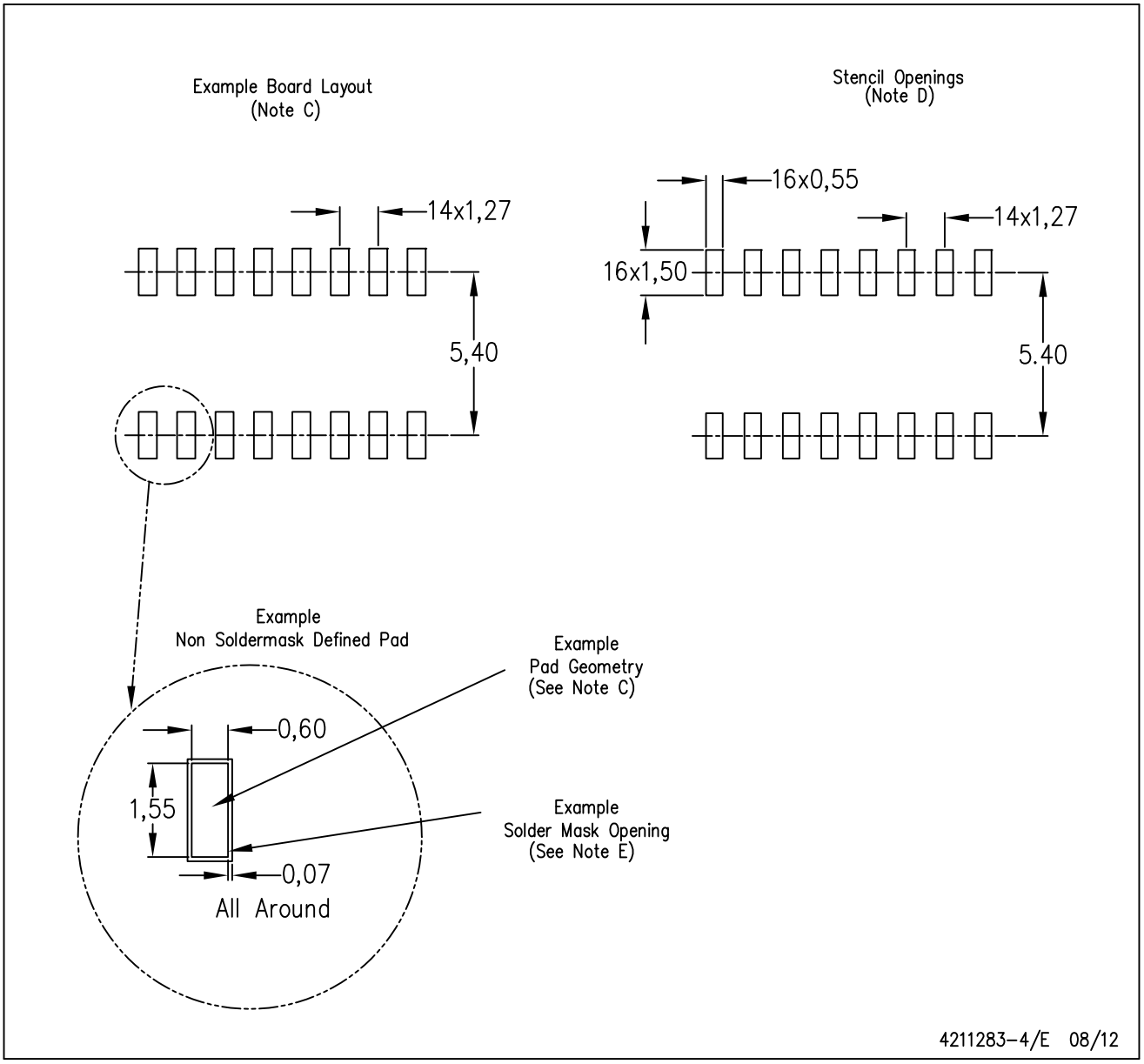

NOTES:
A. All linear dimensions are in millimeters.
B. This drawing is subject to change without notice.
C. Publication IPC–7351 is recommended for alternate designs.
D. Laser cutting apertures with trapezoidal walls and also rounding corners will offer better paste release. Customers should contact their board assembly site for stencil design recommendations. Refer to IPC–7525 for other stencil recommendations.
E. Customers should contact their board fabrication site for solder mask tolerances between and around signal pads.

PW0016A

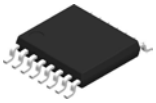

PACKAGE OUTLINE

TSSOP - 1.2 mm max height

SMALL OUTLINE PACKAGE

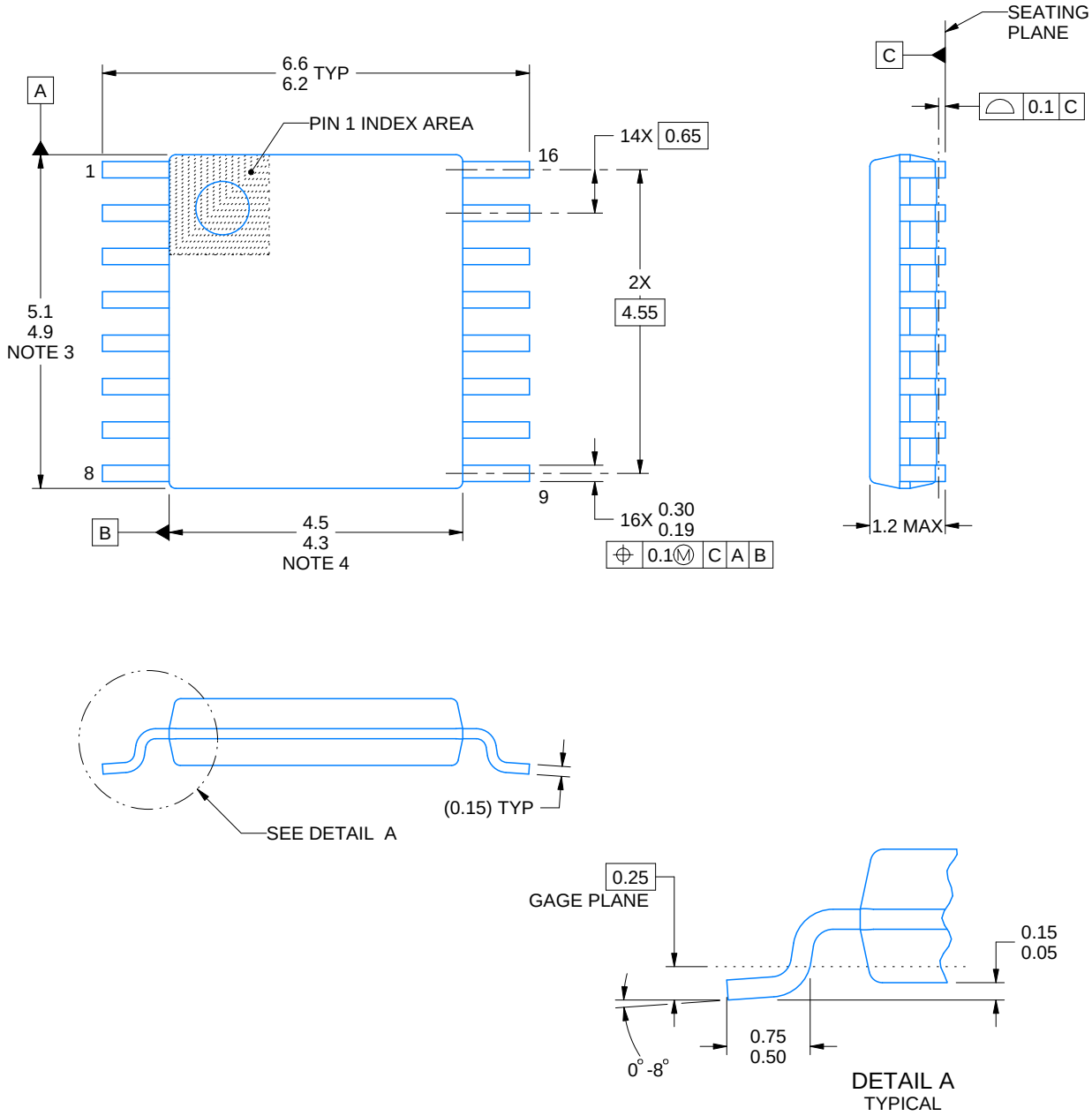

NOTES:

1. All linear dimensions are in millimeters. Any dimensions in parenthesis are for reference only. Dimensioning and tolerancing per ASME Y14.5M.
2. This drawing is subject to change without notice.
3. This dimension does not include mold flash, protrusions, or gate burrs. Mold flash, protrusions, or gate burrs shall not exceed 0.15 mm per side.
4. This dimension does not include interlead flash. Interlead flash shall not exceed 0.25 mm per side.
5. Reference JEDEC registration MO-153.

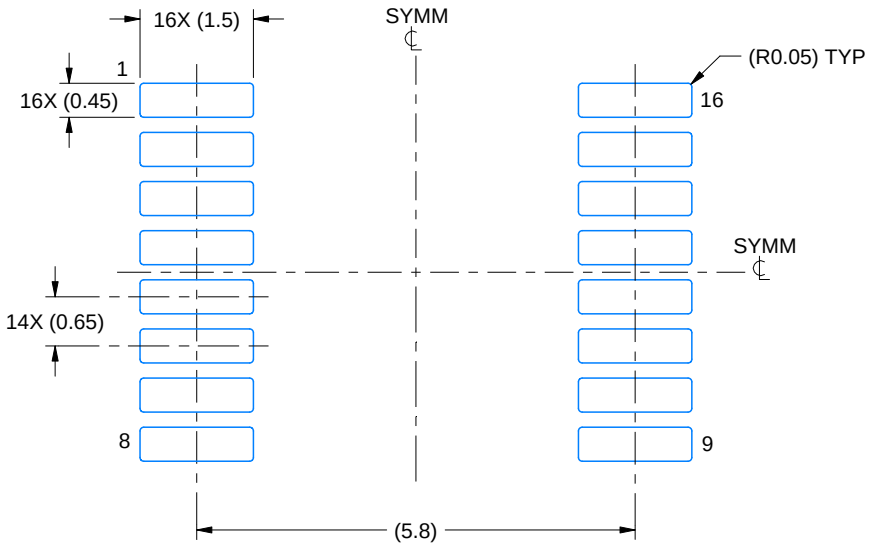

LAND PATTERN EXAMPLE
EXPOSED METAL SHOWN
SCALE: 10X

NON-SOLDER MASK DEFINED (PREFERRED)

SOLDER MASK DEFINED

SOLDER MASK DETAILS

4220204/A 02/2017

NOTES: (continued)

6. Publication IPC-7351 may have alternate designs.
7. Solder mask tolerances between and around signal pads can vary based on board fabrication site.

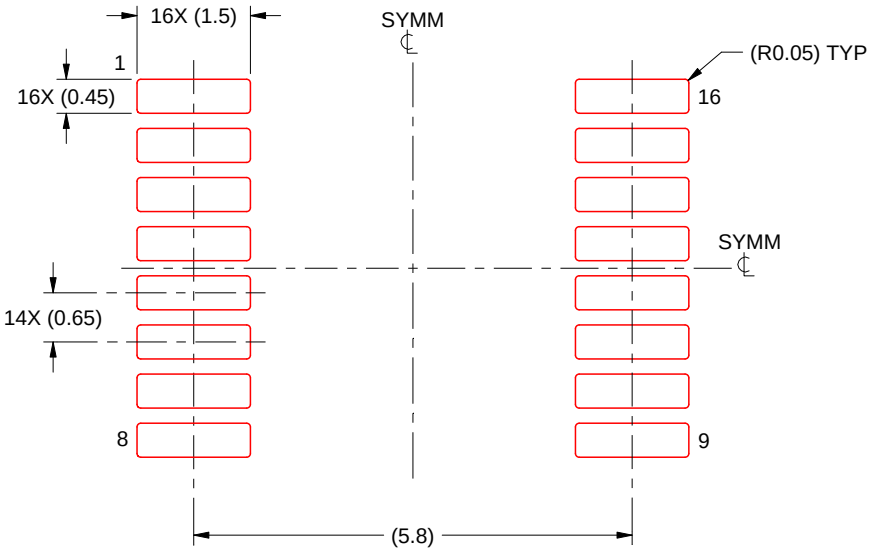

SOLDER PASTE EXAMPLE
BASED ON 0.125 mm THICK STENCIL
SCALE: 10X

4220204/A 02/2017

NOTES: (continued)

8. Laser cutting apertures with trapezoidal walls and rounded corners may offer better paste release. IPC-7525 may have alternate design recommendations.
9. Board assembly site may have different recommendations for stencil design.

MECHANICAL DATA

NS (R-PDSO-G)** **PLASTIC SMALL-OUTLINE PACKAGE**

14-PINS SHOWN

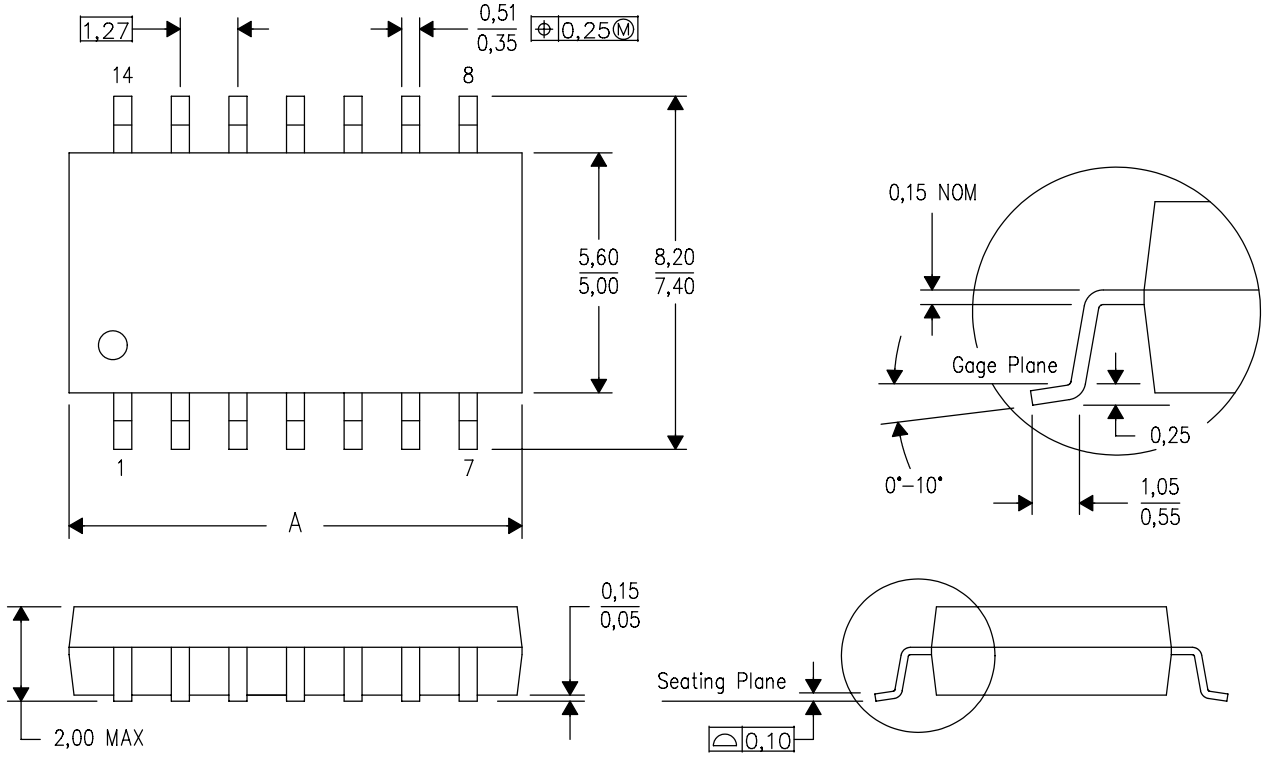

DIM \ PINS **	14	16	20	24
A MAX	10,50	10,50	12,90	15,30
A MIN	9,90	9,90	12,30	14,70

4040062/C 03/03

NOTES:
A. All linear dimensions are in millimeters.
B. This drawing is subject to change without notice.
C. Body dimensions do not include mold flash or protrusion, not to exceed 0,15.

重要声明和免责声明

TI“按原样”提供技术和可靠性数据（包括数据表）、设计资源（包括参考设计）、应用或其他设计建议、网络工具、安全信息和其他资源，不保证没有瑕疵且不做出任何明示或暗示的担保，包括但不限于对适销性、某特定用途方面的适用性或不侵犯任何第三方知识产权的暗示担保。

这些资源可供使用 TI 产品进行设计的熟练开发人员使用。您将自行承担以下全部责任：(1) 针对您的应用选择合适的 TI 产品，(2) 设计、验证并测试您的应用，(3) 确保您的应用满足相应标准以及任何其他功能安全、信息安全、监管或其他要求。

这些资源如有变更，恕不另行通知。TI 授权您仅可将这些资源用于研发本资源所述的 TI 产品的应用。严禁对这些资源进行其他复制或展示。您无权使用任何其他 TI 知识产权或任何第三方知识产权。您应全额赔偿因在这些资源的使用中对 TI 及其代表造成的任何索赔、损害、成本、损失和债务，TI 对此概不负责。

TI 提供的产品受 TI 的销售条款或 ti.com 上其他适用条款/TI 产品随附的其他适用条款的约束。TI 提供这些资源并不会扩展或以其他方式更改 TI 针对 TI 产品发布的适用的担保或担保免责声明。

TI 反对并拒绝您可能提出的任何其他或不同的条款。

邮寄地址：Texas Instruments, Post Office Box 655303, Dallas, Texas 75265
Copyright © 2022，德州仪器 (TI) 公司