Fully-Integrated, Fixed-Frequency, Low-Jitter Crystal Oscillator Clock Generator

FEATURES

- **Single 3.3-V Supply**
- **High-Performance Clock Generator, Incorporating Crystal Oscillator Circuitry with Integrated Frequency Synthesizer**
- **Low Output Jitter: As low as 380 fs (RMS integrated between 10 kHz to 20 MHz)**
- **Low Phase Noise at 312.5 MHz:**
  - **Less than –120 dBc/Hz at 10 kHz and –147 dBc/Hz at 10-MHz offset from carrier**
- **Supports Crystal or LVCMOS Input Frequencies at 31.25 MHz, 33.33 MHz, and 35.42 MHz**
- **Output Frequencies: 100 MHz, 106.25 MHz, 125 MHz, 156.25 MHz, 212.5 MHz, 250 MHz, and 312.5 MHz**
- **Differential Low-Voltage Positive Emitter Coupled Logic (LVPECL) Outputs**
- **Fully-Integrated Voltage-Controlled Oscillator (VCO): Runs from 1.75 GHz to 2.35 GHz**
- **Typical Power Consumption: 300 mW**
- **Chip Enable Control Pin**
- **Available in 4-mm × 4-mm QFN-24 Package**
- **ESD Protection Exceeds 2 kV (HBM)**
- **Industrial Temperature Range: –40°C to +85°C**

APPLICATIONS

- **Low-Cost, Low-Jitter Frequency Multiplier**

DESCRIPTION

The CDC421Axxx is a high-performance, low-phase-noise clock generator. It has an integrated low-noise, LC-based voltage-controlled oscillator (VCO) that operates within the 1.75 GHz to 2.35 GHz frequency range. It has an integrated crystal oscillator that operates in conjunction with an external AT-cut crystal to produce a stable frequency reference for a phase-locked loop (PLL)-based frequency synthesizer. The output frequency (f_{OUT}) is proportional to the frequency of the input crystal (f_{XTAL}).

The device operates in 3.3-V supply environment and is characterized for operation from –40°C to +85°C. The CDC421Axxx is available in a QFN-24 4-mm × 4-mm package.

The CDC421Axxx differs from the CDC421xxx in the following ways:

- ***Device Startup***

  The CDC421Axxx has an improved startup circuit to enable correct operation for all power-supply ramp times.

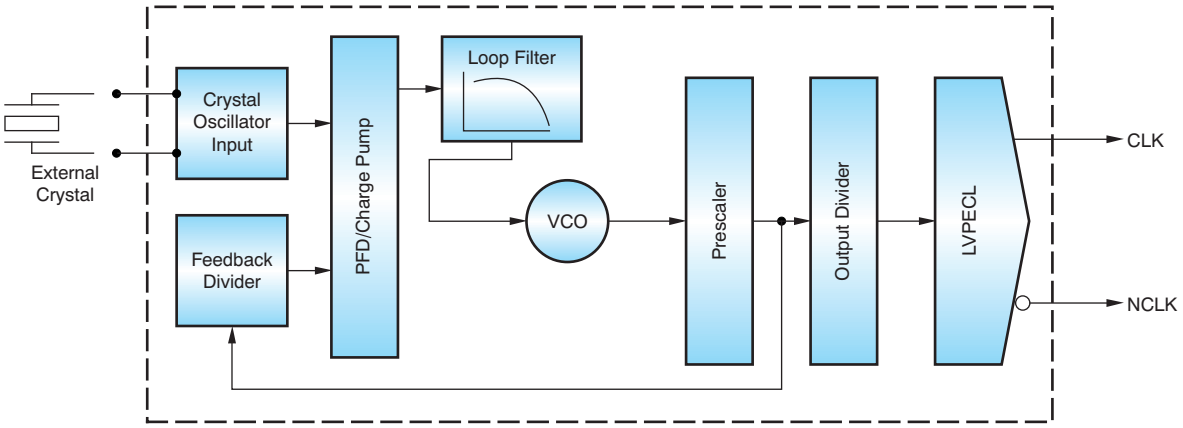

CDC421Axxx

Please be aware that an important notice concerning availability, standard warranty, and use in critical applications of Texas Instruments semiconductor products and disclaimers thereto appears at the end of this data sheet.

All trademarks are the property of their respective owners.

PRODUCTION DATA information is current as of publication date. Products conform to specifications per the terms of the Texas Instruments standard warranty. Production processing does not necessarily include testing of all parameters.

Copyright © 2009, Texas Instruments Incorporated

This integrated circuit can be damaged by ESD. Texas Instruments recommends that all integrated circuits be handled with appropriate precautions. Failure to observe proper handling and installation procedures can cause damage.

ESD damage can range from subtle performance degradation to complete device failure. Precision integrated circuits may be more susceptible to damage because very small parametric changes could cause the device not to meet its published specifications.

AVAILABLE OPTIONS(1)

PRODUCT	INPUT FREQUENCY OR CRYSTAL VALUE (MHz)	OUTPUT FREQUENCY FOR SPECIFIED INPUT FREQUENCY (MHz)	PACKAGE-LEAD	PACKAGE MARKING	ORDERING INFORMATION	TRANSPORT MEDIA, QUANTITY
CDC421A100	33.3333	100.00	QFN-24	421A100	CDC421A100RGET	Tape and reel, 250
					CDC421A100RGER	Tape and reel, 2500
CDC421A106	35.4167	106.25	QFN-24	421A106	CDC421A106RGET	Tape and reel, 250
					CDC421A106RGER	Tape and reel, 2500
CDC421A125	31.2500	125.00	QFN-24	421A125	CDC421A125RGET	Tape and reel, 250
					CDC421A125RGER	Tape and reel, 2500
CDC421A156	31.2500	156.25	QFN-24	421A156	CDC421A156RGET	Tape and reel, 250
					CDC421A156RGER	Tape and reel, 2500
CDC421A212	35.4167	212.50	QFN-24	421A212	CDC421A212RGET	Tape and reel, 250
					CDC421A212RGER	Tape and reel, 2500
CDC421A250	31.2500	250.00	QFN-24	421A250	CDC421A250RGET	Tape and reel, 250
					CDC421A250RGER	Tape and reel, 2500
CDC421A312	31.2500	312.50	QFN-24	421A312	CDC421A312RGET	Tape and reel, 250
					CDC421A312RGER	Tape and reel, 2500

(1) For the most current specifications and package information, see the Package Option Addendum located at the end of this data sheet or refer to our web site at www.ti.com.

ABSOLUTE MAXIMUM RATINGS(1)

Over operating free-air temperature range (unless otherwise noted).

PARAMETER		CDC421Axxx	UNIT
V_{CC}	Supply voltage(2)	–0.5 to 4.6	V
V_I	Voltage range for all other input pins(2)	–0.5 to V_{CC} to +0.5	V
I_O	Output current for LVPECL	–50	mA
ESD	Electrostatic discharge (HBM)	2	kV
T_A	Specified free-air temperature range (no airflow)	–40 to +85	°C
T_J	Maximum junction temperature	+125	°C
T_{STG}	Storage temperature range	–65 to +150	°C

(1) Stresses beyond those listed under *absolute maximum ratings* may cause permanent damage to the device. These are stress ratings only, and functional operation of the device at these or any other conditions beyond those indicated under *recommended operating condition* is not implied. Exposure to absolute-maximum-rated conditions for extended periods may affect device reliability.
(2) All voltage values are with respect to network ground terminal.

RECOMMENDED OPERATING CONDITIONS

Over operating free-air temperature range (unless otherwise noted).

		MIN	NOM	MAX	UNIT
V_{CC}	Supply voltage	3.0	3.30	3.60	V
T_A	Ambient temperature (no airflow, no heatsink)	–40		+85	°C

Copyright © 2009, Texas Instruments Incorporated

ELECTRICAL CHARACTERISTICS

Over recommended operating conditions (unless otherwise noted).

PARAMETER		TEST CONDITIONS	CDC421Axxx MIN	CDC421Axxx TYP	CDC421Axxx MAX	UNIT
V_{CC}	Supply voltage		3.00	3.30	3.60	V
I_{VCC}	Total current			91	110	mA
LVPECL OUTPUT						
f_{CLK}	Output frequency		100		312.5	MHz
V_{OH}	LVPECL high-level output voltage		V_{CC} – 1.20		V_{CC} – 0.81	V
V_{OL}	LVPECL low-level output voltage		V_{CC} – 2.17		V_{CC} – 1.36	V
$\|V_{OD}\|$	LVPECL differential output voltage		407		1076	mV
t_R	Output rise time	20% to 80% of $V_{OUT(PP)}$		230		ps
t_F	Output fall time	20% to 80% of $V_{OUT(PP)}$		230		ps
	Duty cycle of the output waveform		45		55	%
t_j	RMS jitter	10 kHz to 20 MHz			1	ps, RMS
LVCMOS INPUT						
$V_{IL, CMOS}$	Low-level CMOS input voltage	V_{CC} = 3.3 V			0.3 × V_{CC}	V
$V_{IH, CMOS}$	High-level CMOS input voltage	V_{CC} = 3.3 V	0.7 × V_{CC}			V
$I_{L, CMOS}$	Low-level CMOS input current	$V_{CC} = V_{CC, max}$, V_{IL} = 0.0 V			–200	µA
$I_{H, CMOS}$	High-level CMOS input current	$V_{CC} = V_{CC, min}$, V_{IH} = 3.7 V			200	µA

FUNCTIONAL BLOCK DIAGRAM

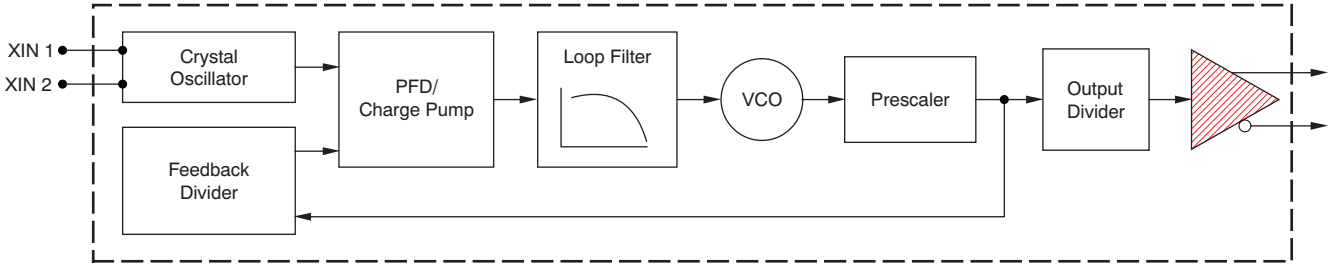

Figure 1. CDC421Axxx: High-Level Block Diagram

DEVICE INFORMATION

RGE PACKAGE
QFN-24
(TOP VIEW)

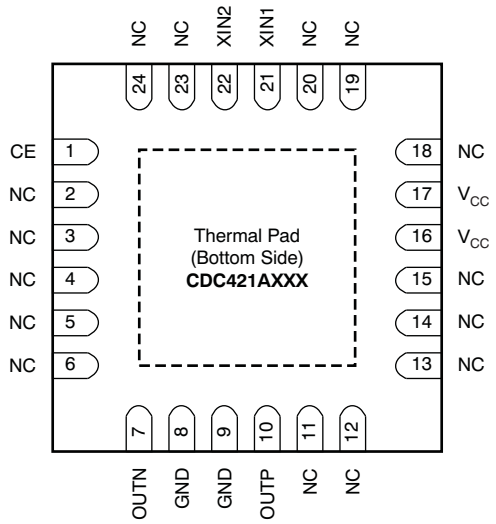

CDC421Axxx Pin Descriptions

TERMINAL		TYPE	ESD PROTECTION	DESCRIPTION
NAME	NO.			
V_{CC}	16, 17	Power	Y	3.3-V power supply
GND	8, 9	Ground	Y	Ground
XIN1	21	I	Y	In crystal input mode, connect XIN1 to one end of the crystal and XIN2 to the other end of the crystal. In LVCMOS single-ended driven mode, XIN1 (pin 21) acts as input reference and XIN2 should connect to GND.
XIN2	22	I	N	
CE	1	I	Y	Chip enable (LVCMOS input) CE = 1 enables the device and the outputs. CE = 0 disables all current sources (LVPECLP = LVPECLN = Hi-Z).
OUTP	10	O	Y	High-speed positive differential LVPECL output. (Outputs are enabled by CE pin.)
OUTN	7	O	Y	High-speed negative differential LVPECL output. (Outputs are enabled by CE pin.)
NC	2–6, 11–15, 18–20, 23, 24	—	Y	TI test pin. Do not connect; leave floating.

Copyright © 2009, Texas Instruments Incorporated

JITTER CHARACTERISTICS IN INPUT CLOCK MODE

Jitter characterization tests are performed using an LVCMOS input signal driving the CDC421Axxx device, as Figure 2 illustrates.

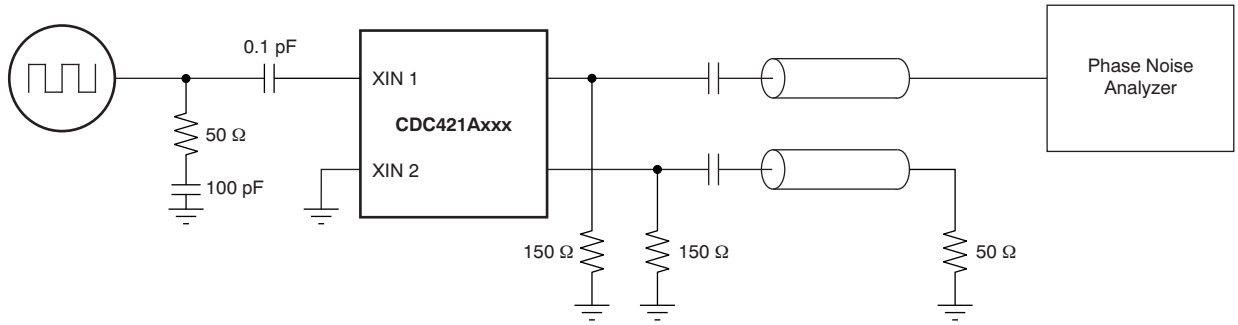

Figure 2. Jitter Test Configuration for an LVTTL Input Driving CDC421Axxx

When the CDC421Axxx is referenced by an external, clean LVCMOS input of 31.25 MHz, 33.33 MHz, and 35.4167 MHz, Table 1 to Table 7 list the measured SSB phase noise of all the outputs supported by the CDC421Axxx device (100 MHz, 106.25 MHz, 125 MHz, 156.25 MHz, 212.5 MHz, 250 MHz, and 312.5 MHz) from 100 Hz to 20 MHz from the carrier.

Table 1. Phase Noise Data with LVCMOS Input of 33.3333 MHz and LVPECL Output at 100.00 MHz(1)

PARAMETER		MIN	TYP	MAX	UNIT
phn_{100}	Phase noise at 100 Hz		–111		dBc/Hz
phn_{1k}	Phase noise at 1 kHz		–121		dBc/Hz
phn_{10k}	Phase noise at 10 kHz		–131		dBc/Hz
phn_{100k}	Phase noise at 100 kHz		–133		dBc/Hz
phn_{1M}	Phase noise at 1 MHz		–142		dBc/Hz
phn_{10M}	Phase noise at 10 MHz		–149		dBc/Hz
phn_{20M}	Phase noise at 20 MHz		–149		dBc/Hz
J_{RMS}	RMS jitter integrated from 12 kHz to 20 MHz		507		fs
T_j	Total jitter		35.33		ps
D_j	Deterministic jitter		11.54		ps

(1) Phase noise specifications under following conditions: input frequency = 33.3333 MHz, output frequency = 100.00 MHz.

Table 2. Phase Noise Data with LVCMOS Input of 35.4167 MHz and LVPECL Output at 106.25 MHz(1)

PARAMETER		MIN	TYP	MAX	UNIT
phn_{100}	Phase noise at 100 Hz		–112		dBc/Hz
phn_{1k}	Phase noise at 1 kHz		–121		dBc/Hz
phn_{10k}	Phase noise at 10 kHz		–125		dBc/Hz
phn_{100k}	Phase noise at 100 kHz		–129		dBc/Hz
phn_{1M}	Phase noise at 1 MHz		–142		dBc/Hz
phn_{10M}	Phase noise at 10 MHz		–151		dBc/Hz
phn_{20M}	Phase noise at 20 MHz		–151		dBc/Hz
J_{RMS}	RMS jitter integrated from 12 kHz to 20 MHz		530		fs
T_j	Total jitter		30.39		ps
D_j	Deterministic jitter		11		ps

(1) Phase noise specifications under following conditions: input frequency = 35.4167 MHz, output frequency = 106.25 MHz.

Copyright © 2009, Texas Instruments Incorporated

Table 3. Phase Noise Data with LVCMOS Input of 31.2500 MHz and LVPECL Output at 125.00 MHz(1)

PARAMETER		MIN	TYP	MAX	UNIT
phn_{100}	Phase noise at 100 Hz		–108		dBc/Hz
phn_{1k}	Phase noise at 1 kHz		–118		dBc/Hz
phn_{10k}	Phase noise at 10 kHz		–127		dBc/Hz
phn_{100k}	Phase noise at 100 kHz		–130		dBc/Hz
phn_{1M}	Phase noise at 1 MHz		–139		dBc/Hz
phn_{10M}	Phase noise at 10 MHz		–147		dBc/Hz
phn_{20M}	Phase noise at 20 MHz		–147		dBc/Hz
J_{RMS}	RMS jitter integrated from 12 kHz to 20 MHz		529		fs
T_j	Total jitter		47.47		ps
D_j	Deterministic jitter		25.2		ps

(1) Phase noise specifications under following conditions: input frequency = 31.2500 MHz, output frequency = 125.00 MHz.

Table 4. Phase Noise Data with LVCMOS Input of 31.2500 MHz and LVPECL Output at 156.25 MHz(1)

PARAMETER		MIN	TYP	MAX	UNIT
phn_{100}	Phase noise at 100 Hz		–106		dBc/Hz
phn_{1k}	Phase noise at 1 kHz		–117		dBc/Hz
phn_{10k}	Phase noise at 10 kHz		–126		dBc/Hz
phn_{100k}	Phase noise at 100 kHz		–128		dBc/Hz
phn_{1M}	Phase noise at 1 MHz		–139		dBc/Hz
phn_{10M}	Phase noise at 10 MHz		–147		dBc/Hz
phn_{20M}	Phase noise at 20 MHz		–147		dBc/Hz
J_{RMS}	RMS jitter integrated from 12 kHz to 20 MHz		472		fs
T_j	Total jitter		31.54		ps
D_j	Deterministic jitter		9.12		ps

(1) Phase noise specifications under following conditions: input frequency = 31.2500 MHz, output frequency = 156.25 MHz.

Table 5. Phase Noise Data with LVCMOS Input of 35.4167 MHz and LVPECL Output at 212.50 MHz(1)

PARAMETER		MIN	TYP	MAX	UNIT
phn_{100}	Phase noise at 100 Hz		–105		dBc/Hz
phn_{1k}	Phase noise at 1 kHz		–115		dBc/Hz
phn_{10k}	Phase noise at 10 kHz		–119		dBc/Hz
phn_{100k}	Phase noise at 100 kHz		–123		dBc/Hz
phn_{1M}	Phase noise at 1 MHz		–135		dBc/Hz
phn_{10M}	Phase noise at 10 MHz		–148		dBc/Hz
phn_{20M}	Phase noise at 20 MHz		–148		dBc/Hz
J_{RMS}	RMS jitter integrated from 12 kHz to 20 MHz		512		fs
T_j	Total jitter		33.96		ps
D_j	Deterministic jitter		13.78		ps

(1) Phase noise specifications under following conditions: input frequency = 35.4167 MHz, output frequency = 212.50 MHz.

Copyright © 2009, Texas Instruments Incorporated

Table 6. Phase Noise Data with LVCMOS Input of 31.2500 MHz and LVPECL Output at 250.00 MHz(1)

PARAMETER		MIN	TYP	MAX	UNIT
phn_{100}	Phase noise at 100 Hz		–105		dBc/Hz
phn_{1k}	Phase noise at 1 kHz		–112		dBc/Hz
phn_{10k}	Phase noise at 10 kHz		–121		dBc/Hz
phn_{100k}	Phase noise at 100 kHz		–124		dBc/Hz
phn_{1M}	Phase noise at 1 MHz		–134		dBc/Hz
phn_{10M}	Phase noise at 10 MHz		–148		dBc/Hz
phn_{20M}	Phase noise at 20 MHz		–149		dBc/Hz
J_{RMS}	RMS jitter integrated from 12 kHz to 20 MHz		420		fs
T_j	Total jitter		36.98		ps
D_j	Deterministic jitter		18.52		ps

(1) Phase noise specifications under following conditions: input frequency = 31.2500 MHz, output frequency = 250.00 MHz.

Table 7. Phase Noise Data with LVCMOS Input of 31.2500 MHz and LVPECL Output at 312.50 MHz(1)

PARAMETER		MIN	TYP	MAX	UNIT
phn_{100}	Phase noise at 100 Hz		–102		dBc/Hz
phn_{1k}	Phase noise at 1 kHz		–111		dBc/Hz
phn_{10k}	Phase noise at 10 kHz		–120		dBc/Hz
phn_{100k}	Phase noise at 100 kHz		–123		dBc/Hz
phn_{1M}	Phase noise at 1 MHz		–135		dBc/Hz
phn_{10M}	Phase noise at 10 MHz		–147		dBc/Hz
phn_{20M}	Phase noise at 20 MHz		–147		dBc/Hz
J_{RMS}	RMS jitter integrated from 12 kHz to 20 MHz		378		fs
T_j	Total jitter		29.82		ps
D_j	Deterministic jitter		11		ps

(1) Phase noise specifications under following conditions: input frequency = 31.2500 MHz, output frequency = 312.50 MHz.

Copyright © 2009, Texas Instruments Incorporated

PACKAGING INFORMATION

Orderable Device	Status (1)	Package Type	Package Drawing	Pins	Package Qty	Eco Plan (2)	Lead finish/ Ball material (6)	MSL Peak Temp (3)	Op Temp (°C)	Device Marking (4/5)	Samples
CDC421A100RGER	ACTIVE	VQFN	RGE	24	3000	RoHS & Green	NIPDAU	Level-2-260C-1 YEAR	-40 to 85	421A 100	Samples
CDC421A100RGET	ACTIVE	VQFN	RGE	24	250	RoHS & Green	NIPDAU	Level-2-260C-1 YEAR	-40 to 85	421A 100	Samples
CDC421A106RGER	ACTIVE	VQFN	RGE	24	3000	RoHS & Green	NIPDAU	Level-2-260C-1 YEAR	-40 to 85	421A 106	Samples
CDC421A106RGET	ACTIVE	VQFN	RGE	24	250	RoHS & Green	NIPDAU	Level-2-260C-1 YEAR	-40 to 85	421A 106	Samples
CDC421A125RGER	ACTIVE	VQFN	RGE	24	3000	RoHS & Green	NIPDAU	Level-2-260C-1 YEAR	-40 to 85	421A 125	Samples
CDC421A125RGET	ACTIVE	VQFN	RGE	24	250	RoHS & Green	NIPDAU	Level-2-260C-1 YEAR	-40 to 85	421A 125	Samples
CDC421A156RGER	ACTIVE	VQFN	RGE	24	3000	RoHS & Green	NIPDAU	Level-2-260C-1 YEAR	-40 to 85	421A 156	Samples
CDC421A156RGET	ACTIVE	VQFN	RGE	24	250	RoHS & Green	NIPDAU	Level-2-260C-1 YEAR	-40 to 85	421A 156	Samples
CDC421A212RGER	ACTIVE	VQFN	RGE	24	3000	RoHS & Green	NIPDAU	Level-2-260C-1 YEAR	-40 to 85	421A 212	Samples
CDC421A212RGET	ACTIVE	VQFN	RGE	24	250	RoHS & Green	NIPDAU	Level-2-260C-1 YEAR	-40 to 85	421A 212	Samples
CDC421A250RGER	ACTIVE	VQFN	RGE	24	3000	RoHS & Green	NIPDAU	Level-2-260C-1 YEAR	-40 to 85	421A 250	Samples
CDC421A250RGET	ACTIVE	VQFN	RGE	24	250	RoHS & Green	NIPDAU	Level-2-260C-1 YEAR	-40 to 85	421A 250	Samples
CDC421A312RGER	ACTIVE	VQFN	RGE	24	3000	RoHS & Green	NIPDAU	Level-2-260C-1 YEAR	-40 to 85	421A 312	Samples
CDC421A312RGET	ACTIVE	VQFN	RGE	24	250	RoHS & Green	NIPDAU	Level-2-260C-1 YEAR	-40 to 85	421A 312	Samples

(1) The marketing status values are defined as follows:
ACTIVE: Product device recommended for new designs.
LIFEBUY: TI has announced that the device will be discontinued, and a lifetime-buy period is in effect.
NRND: Not recommended for new designs. Device is in production to support existing customers, but TI does not recommend using this part in a new design.
PREVIEW: Device has been announced but is not in production. Samples may or may not be available.
OBSOLETE: TI has discontinued the production of the device.

(2) **RoHS:** TI defines "RoHS" to mean semiconductor products that are compliant with the current EU RoHS requirements for all 10 RoHS substances, including the requirement that RoHS substance do not exceed 0.1% by weight in homogeneous materials. Where designed to be soldered at high temperatures, "RoHS" products are suitable for use in specified lead-free processes. TI may reference these types of products as "Pb-Free".
RoHS Exempt: TI defines "RoHS Exempt" to mean products that contain lead but are compliant with EU RoHS pursuant to a specific EU RoHS exemption.
Green: TI defines "Green" to mean the content of Chlorine (Cl) and Bromine (Br) based flame retardants meet JS709B low halogen requirements of <=1000ppm threshold. Antimony trioxide based flame retardants must also meet the <=1000ppm threshold requirement.

(3) MSL, Peak Temp. - The Moisture Sensitivity Level rating according to the JEDEC industry standard classifications, and peak solder temperature.

(4) There may be additional marking, which relates to the logo, the lot trace code information, or the environmental category on the device.

(5) Multiple Device Markings will be inside parentheses. Only one Device Marking contained in parentheses and separated by a "~" will appear on a device. If a line is indented then it is a continuation of the previous line and the two combined represent the entire Device Marking for that device.

(6) Lead finish/Ball material - Orderable Devices may have multiple material finish options. Finish options are separated by a vertical ruled line. Lead finish/Ball material values may wrap to two lines if the finish value exceeds the maximum column width.

Important Information and Disclaimer: The information provided on this page represents TI's knowledge and belief as of the date that it is provided. TI bases its knowledge and belief on information provided by third parties, and makes no representation or warranty as to the accuracy of such information. Efforts are underway to better integrate information from third parties. TI has taken and continues to take reasonable steps to provide representative and accurate information but may not have conducted destructive testing or chemical analysis on incoming materials and chemicals. TI and TI suppliers consider certain information to be proprietary, and thus CAS numbers and other limited information may not be available for release.

In no event shall TI's liability arising out of such information exceed the total purchase price of the TI part(s) at issue in this document sold by TI to Customer on an annual basis.

TAPE AND REEL INFORMATION

REEL DIMENSIONS

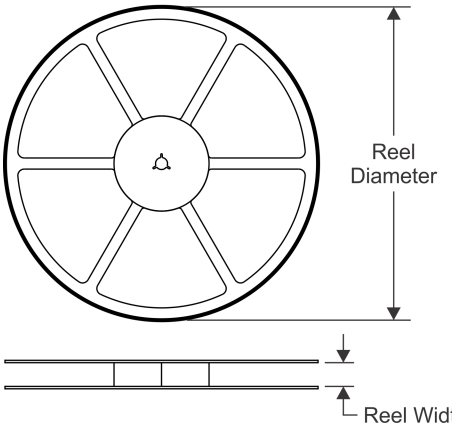

TAPE DIMENSIONS

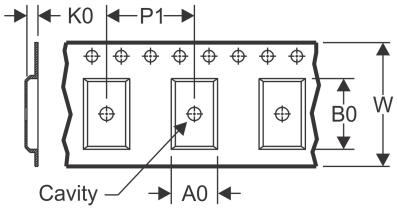

A0	Dimension designed to accommodate the component width
B0	Dimension designed to accommodate the component length
K0	Dimension designed to accommodate the component thickness
W	Overall width of the carrier tape
P1	Pitch between successive cavity centers

QUADRANT ASSIGNMENTS FOR PIN 1 ORIENTATION IN TAPE

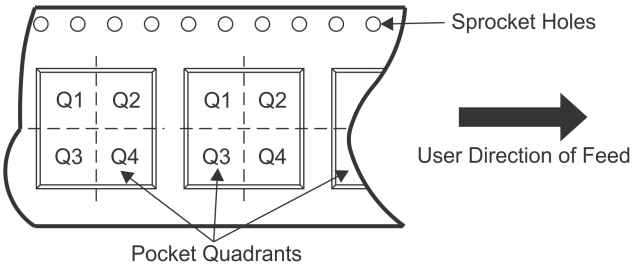

*All dimensions are nominal

Device	Package Type	Package Drawing	Pins	SPQ	Reel Diameter (mm)	Reel Width W1 (mm)	A0 (mm)	B0 (mm)	K0 (mm)	P1 (mm)	W (mm)	Pin1 Quadrant
CDC421A100RGER	VQFN	RGE	24	3000	330.0	12.4	4.25	4.25	1.15	8.0	12.0	Q2
CDC421A100RGET	VQFN	RGE	24	250	180.0	12.4	4.25	4.25	1.15	8.0	12.0	Q2
CDC421A106RGER	VQFN	RGE	24	3000	330.0	12.4	4.25	4.25	1.15	8.0	12.0	Q2
CDC421A106RGET	VQFN	RGE	24	250	180.0	12.4	4.25	4.25	1.15	8.0	12.0	Q2
CDC421A125RGER	VQFN	RGE	24	3000	330.0	12.4	4.25	4.25	1.15	8.0	12.0	Q2
CDC421A125RGET	VQFN	RGE	24	250	180.0	12.4	4.25	4.25	1.15	8.0	12.0	Q2
CDC421A156RGER	VQFN	RGE	24	3000	330.0	12.4	4.25	4.25	1.15	8.0	12.0	Q2
CDC421A156RGET	VQFN	RGE	24	250	180.0	12.4	4.25	4.25	1.15	8.0	12.0	Q2
CDC421A212RGER	VQFN	RGE	24	3000	330.0	12.4	4.25	4.25	1.15	8.0	12.0	Q2
CDC421A212RGET	VQFN	RGE	24	250	180.0	12.4	4.25	4.25	1.15	8.0	12.0	Q2
CDC421A250RGER	VQFN	RGE	24	3000	330.0	12.4	4.25	4.25	1.15	8.0	12.0	Q2
CDC421A250RGET	VQFN	RGE	24	250	180.0	12.4	4.25	4.25	1.15	8.0	12.0	Q2
CDC421A312RGER	VQFN	RGE	24	3000	330.0	12.4	4.25	4.25	1.15	8.0	12.0	Q2
CDC421A312RGET	VQFN	RGE	24	250	180.0	12.4	4.25	4.25	1.15	8.0	12.0	Q2

TAPE AND REEL BOX DIMENSIONS

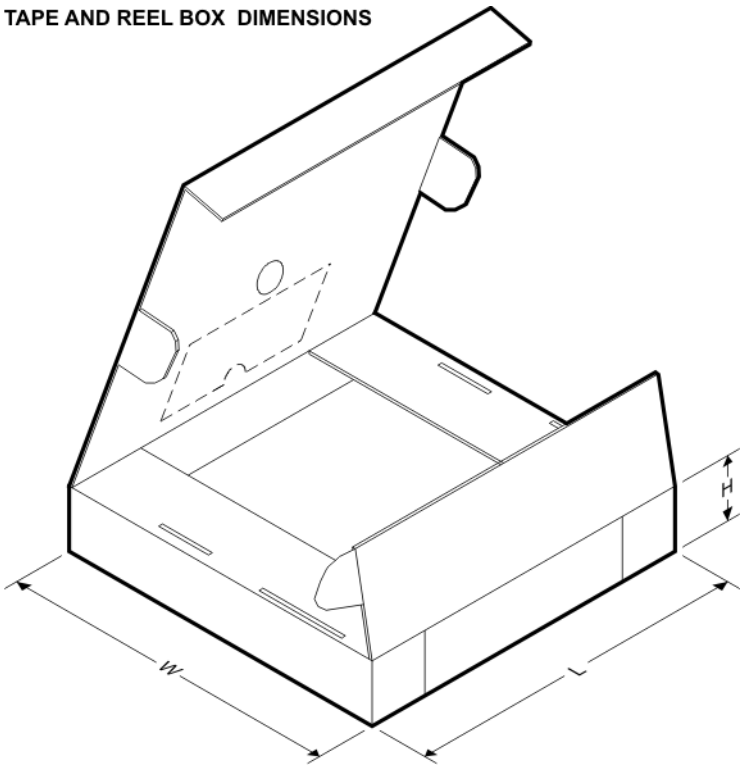

*All dimensions are nominal

Device	Package Type	Package Drawing	Pins	SPQ	Length (mm)	Width (mm)	Height (mm)
CDC421A100RGER	VQFN	RGE	24	3000	853.0	449.0	35.0
CDC421A100RGET	VQFN	RGE	24	250	210.0	185.0	35.0
CDC421A106RGER	VQFN	RGE	24	3000	853.0	449.0	35.0
CDC421A106RGET	VQFN	RGE	24	250	210.0	185.0	35.0
CDC421A125RGER	VQFN	RGE	24	3000	853.0	449.0	35.0
CDC421A125RGET	VQFN	RGE	24	250	210.0	185.0	35.0
CDC421A156RGER	VQFN	RGE	24	3000	853.0	449.0	35.0
CDC421A156RGET	VQFN	RGE	24	250	210.0	185.0	35.0
CDC421A212RGER	VQFN	RGE	24	3000	853.0	449.0	35.0
CDC421A212RGET	VQFN	RGE	24	250	210.0	185.0	35.0
CDC421A250RGER	VQFN	RGE	24	3000	853.0	449.0	35.0
CDC421A250RGET	VQFN	RGE	24	250	210.0	185.0	35.0
CDC421A312RGER	VQFN	RGE	24	3000	853.0	449.0	35.0
CDC421A312RGET	VQFN	RGE	24	250	210.0	185.0	35.0

RGE 24 VQFN - 1 mm max height

PLASTIC QUAD FLATPACK - NO LEAD

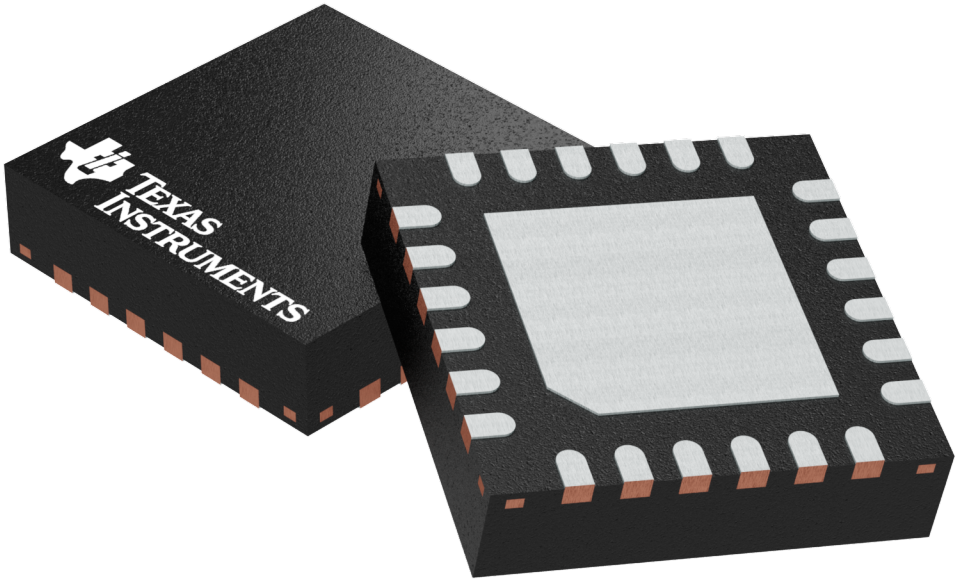

Images above are just a representation of the package family, actual package may vary.
Refer to the product data sheet for package details.

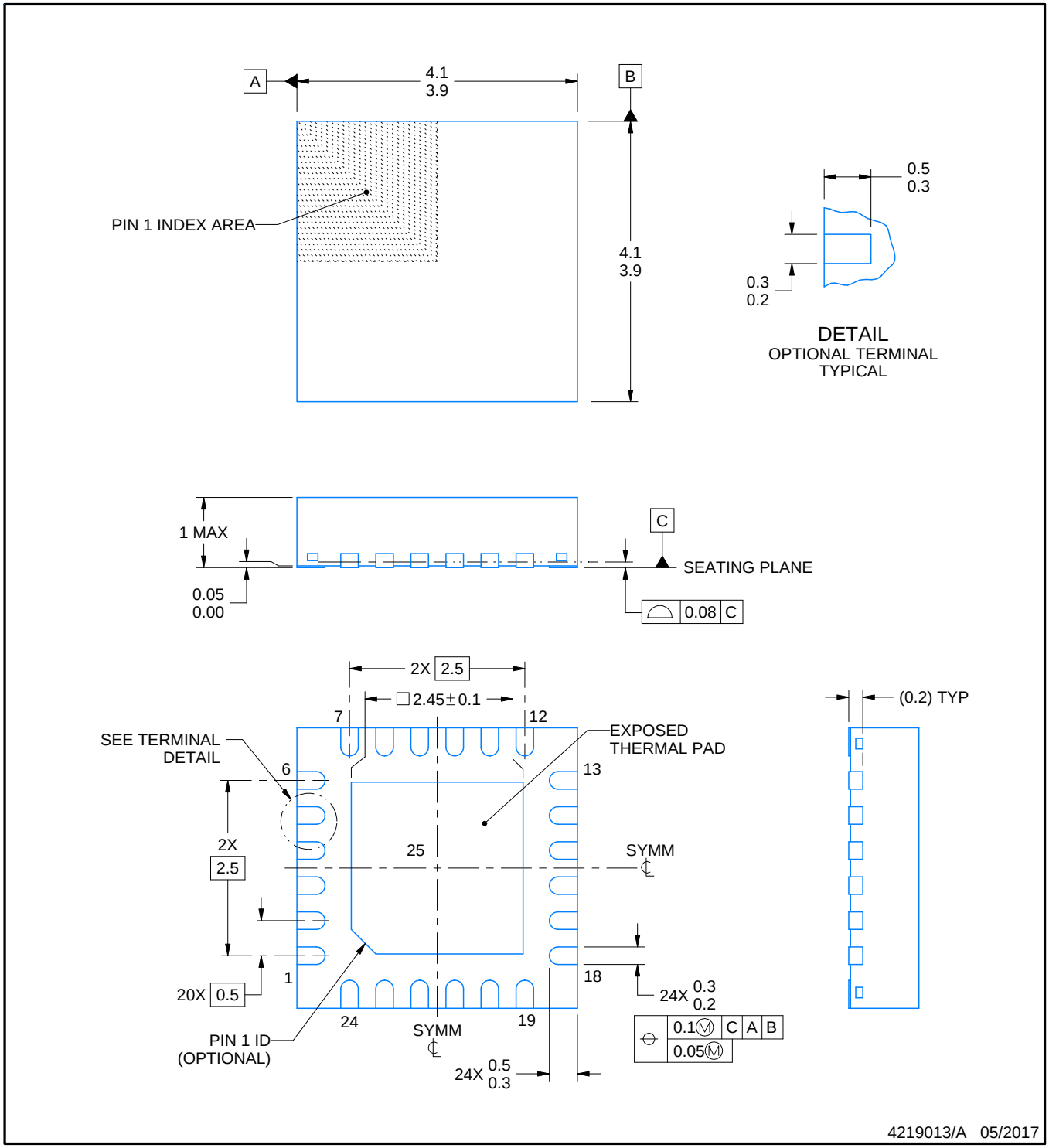

NOTES:

1. All linear dimensions are in millimeters. Any dimensions in parenthesis are for reference only. Dimensioning and tolerancing per ASME Y14.5M.
2. This drawing is subject to change without notice.
3. The package thermal pad must be soldered to the printed circuit board for thermal and mechanical performance.

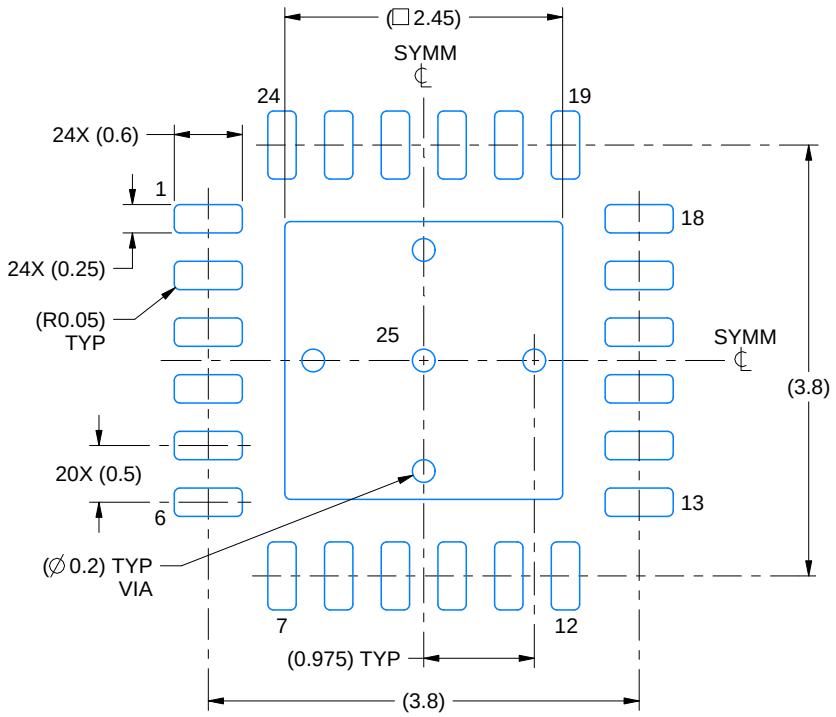

LAND PATTERN EXAMPLE
EXPOSED METAL SHOWN
SCALE:15X

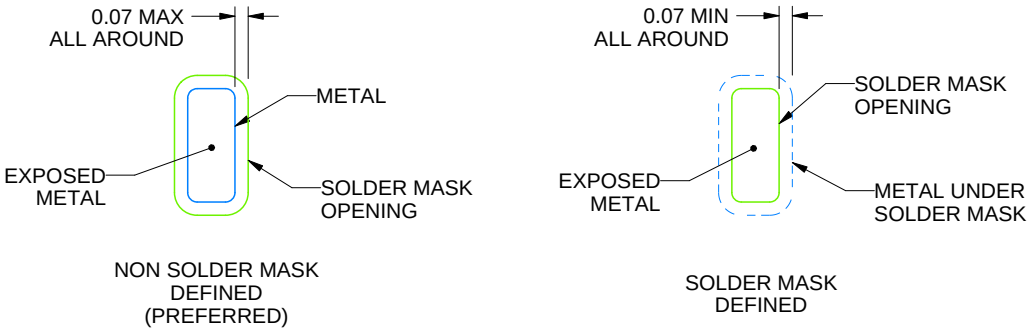

SOLDER MASK DETAILS

4219013/A 05/2017

NOTES: (continued)

4. This package is designed to be soldered to a thermal pad on the board. For more information, see Texas Instruments literature number SLUA271 (www.ti.com/lit/slua271).
5. Vias are optional depending on application, refer to device data sheet. If any vias are implemented, refer to their locations shown on this view. It is recommended that vias under paste be filled, plugged or tented.

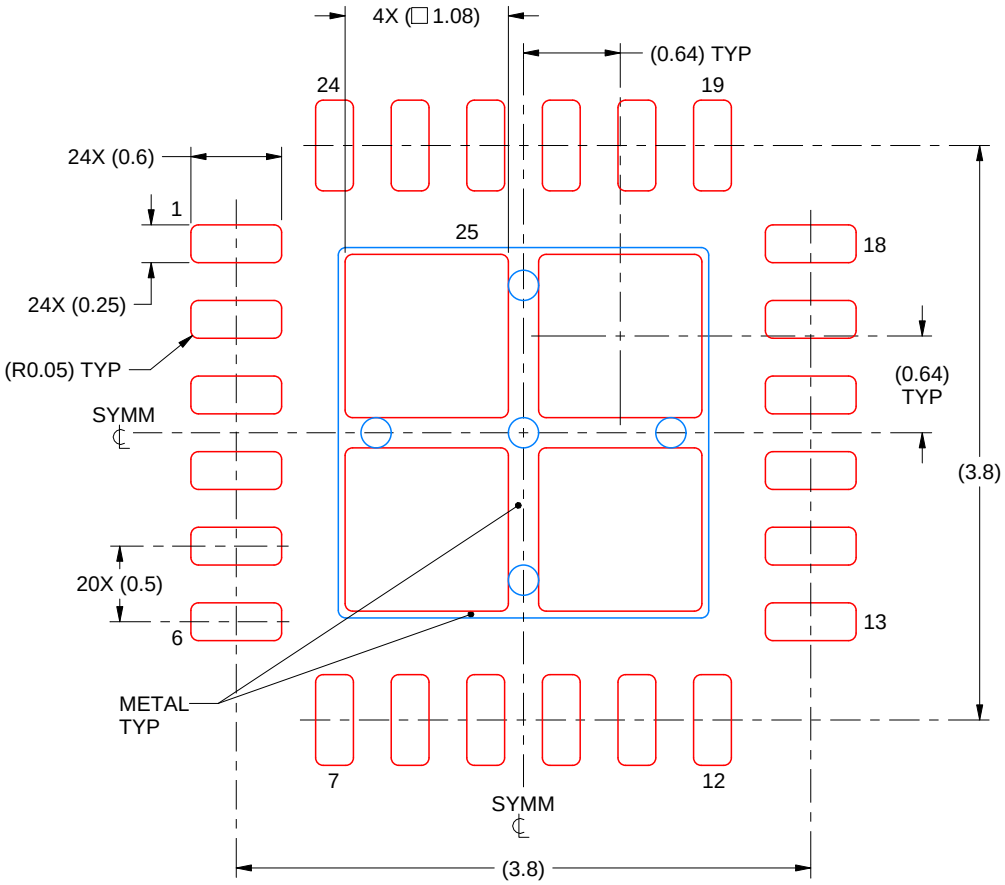

SOLDER PASTE EXAMPLE
BASED ON 0.125 mm THICK STENCIL

EXPOSED PAD 25
78% PRINTED SOLDER COVERAGE BY AREA UNDER PACKAGE
SCALE:20X

4219013/A 05/2017

NOTES: (continued)

6. Laser cutting apertures with trapezoidal walls and rounded corners may offer better paste release. IPC-7525 may have alternate design recommendations.

IMPORTANT NOTICE AND DISCLAIMER

TI PROVIDES TECHNICAL AND RELIABILITY DATA (INCLUDING DATASHEETS), DESIGN RESOURCES (INCLUDING REFERENCE DESIGNS), APPLICATION OR OTHER DESIGN ADVICE, WEB TOOLS, SAFETY INFORMATION, AND OTHER RESOURCES “AS IS” AND WITH ALL FAULTS, AND DISCLAIMS ALL WARRANTIES, EXPRESS AND IMPLIED, INCLUDING WITHOUT LIMITATION ANY IMPLIED WARRANTIES OF MERCHANTABILITY, FITNESS FOR A PARTICULAR PURPOSE OR NON-INFRINGEMENT OF THIRD PARTY INTELLECTUAL PROPERTY RIGHTS.

These resources are intended for skilled developers designing with TI products. You are solely responsible for (1) selecting the appropriate TI products for your application, (2) designing, validating and testing your application, and (3) ensuring your application meets applicable standards, and any other safety, security, or other requirements. These resources are subject to change without notice. TI grants you permission to use these resources only for development of an application that uses the TI products described in the resource. Other reproduction and display of these resources is prohibited. No license is granted to any other TI intellectual property right or to any third party intellectual property right. TI disclaims responsibility for, and you will fully indemnify TI and its representatives against, any claims, damages, costs, losses, and liabilities arising out of your use of these resources.

TI’s products are provided subject to TI’s Terms of Sale (www.ti.com/legal/termsofsale.html) or other applicable terms available either on ti.com or provided in conjunction with such TI products. TI’s provision of these resources does not expand or otherwise alter TI’s applicable warranties or warranty disclaimers for TI products.

Mailing Address: Texas Instruments, Post Office Box 655303, Dallas, Texas 75265
Copyright © 2020, Texas Instruments Incorporated