DRV8870 3.6A 刷式直流电机驱动器（PWM 控制）

1 特性

- 独立的 H 桥电机
  - 驱动一个直流电机、一个步进电机的绕组或其他负载
- 6.5V 至 45V 宽工作电压范围
- 565mΩ（典型值）$R_{DS(on)}$ (HS + LS)
- 3.6A 峰值电流驱动能力
- 脉宽调制 (PWM) 控制接口
- 集成电流调节功能
- 低功耗休眠模式
- 小型封装尺寸
  - 8 引脚 HSOP 封装，带有 PowerPAD™
  - 4.9mm × 6.0mm
- 集成保护特性
  - VM 欠压闭锁 (UVLO)
  - 过流保护 (OCP)
  - 热关断 (TSD)
  - 自动故障恢复

2 应用范围

- 打印机
- 电器
- 工业设备
- 其他机电一体化应用

3 说明

DRV8870 是一款刷式直流电机驱动器，适用于打印机、电器、工业设备以及其他小型机器。 两个逻辑输入控制 H 桥驱动器，该驱动器由四个 N 沟道金属氧化物半导体场效应晶体管 (MOSFET) 组成，能够以高达 3.6A 的峰值电流双向控制电机。 利用电流衰减模式，可通过对输入进行脉宽调制 (PWM) 来控制电机转速。 如果将两个输入均置为低电平，则电机驱动器将进入低功耗休眠模式。

DRV8870 具有集成电流调节功能，该功能基于模拟输入 VREF 以及 ISEN 引脚的电压（与流经外部感测电阻的电机电流成正比）。 该器件能够将电流限制在某一已知水平，这可显著降低系统功耗要求，并且无需大容量电容来维持稳定电压，尤其是在电机启动和停转时。

该器件针对故障和短路问题提供了全面保护，包括欠压锁定 (UVLO)、过流保护 (OCP) 和过热保护 (TSD)。 故障排除后，器件会自动恢复正常工作。

器件信息 (1)

部件号	封装	封装尺寸（标称值）
DRV8870	HSOP (8)	4.90mm × 6.00mm

(1) 要了解所有可用封装，请见数据表末尾的可订购产品附录。

简化电路原理图

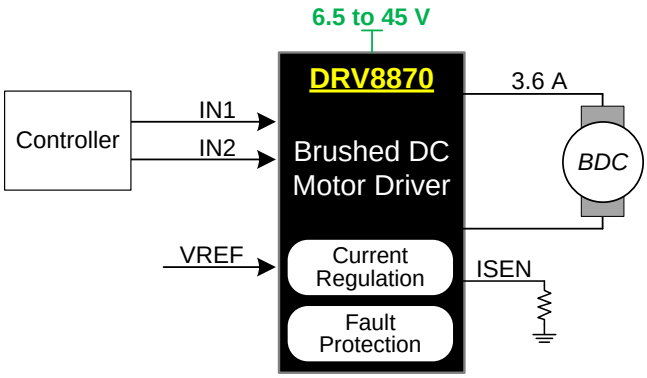

H 桥状态

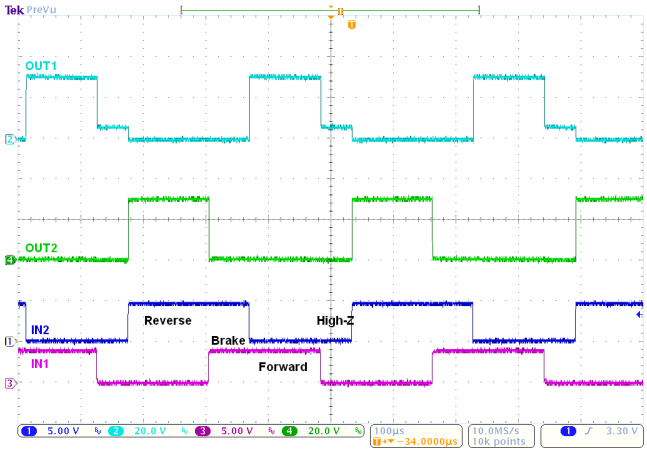

An IMPORTANT NOTICE at the end of this data sheet addresses availability, warranty, changes, use in safety-critical applications, intellectual property matters and other important disclaimers. PRODUCTION DATA.

目录

1 特性 ... 1
2 应用范围 ... 1
3 说明 ... 1
4 修订历史记录 ... 2
5 **Pin Configuration and Functions** ... 3
6 **Specifications** ... 3
6.1 Absolute Maximum Ratings ... 3
6.2 ESD Ratings ... 4
6.3 Recommended Operating Conditions ... 4
6.4 Thermal Information ... 4
6.5 Electrical Characteristics ... 5
6.6 Typical Characteristics ... 6
7 **Detailed Description** ... 7
7.1 Overview ... 7
7.2 Functional Block Diagram ... 7
7.3 Feature Description ... 8
7.4 Device Functional Modes ... 10
8 **Application and Implementation** ... 11
8.1 Application Information ... 11
8.2 Typical Application ... 11
9 **Power Supply Recommendations** ... 14
9.1 Bulk Capacitance ... 14
10 **Layout** ... 15
10.1 Layout Guidelines ... 15
10.2 Layout Example ... 15
10.3 Thermal Considerations ... 15
10.4 Power Dissipation ... 15
11 器件和文档支持 ... 17
11.1 文档支持 ... 17
11.2 社区资源 ... 17
11.3 商标 ... 17
11.4 静电放电警告 ... 17
11.5 Glossary ... 17
12 机械、封装和可订购信息 ... 17

4 修订历史记录

日期	修订版本	注释
2015 年 8 月	*	首次发布。

Copyright © 2015, Texas Instruments Incorporated

5 Pin Configuration and Functions

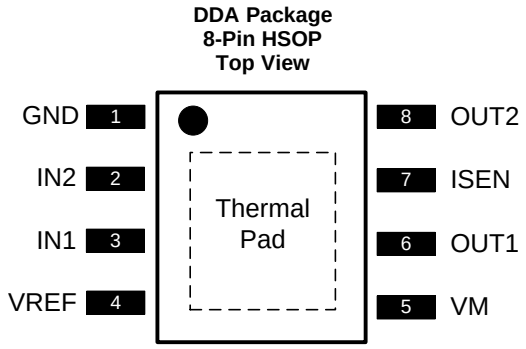

Pin Functions

PIN		TYPE	DESCRIPTION	
NAME	NO.			
GND	1	PWR	Logic ground	Connect to board ground
IN1	3	I	Logic inputs	Controls the H-bridge output. Has internal pulldowns. (See Table 1.)
IN2	2			
ISEN	7	PWR	High-current ground path	If using current regulation, connect ISEN to a resistor (low-value, high-power-rating) to ground. If not using current regulation, connect ISEN directly to ground.
OUT1	6	O	H-bridge output	Connect directly to the motor or other inductive load.
OUT2	8			
PAD	—	—	Thermal pad	Connect to board ground. For good thermal dissipation, use large ground planes on multiple layers, and multiple nearby vias connecting those planes.
VM	5	PWR	6.5-V to 45-V power supply	Connect a 0.1-µF bypass capacitor to ground, as well as sufficient bulk capacitance, rated for the VM voltage.
VREF	4	I	Analog input	Apply a voltage between 0.3 to 5 V. For information on current regulation, see the *Current Regulation* section.

6 Specifications

6.1 Absolute Maximum Ratings

over operating free-air temperature range (unless otherwise noted) (1)

	MIN	MAX	UNIT
Power supply voltage (VM)	–0.3	50	V
Power supply voltage ramp rate (VM)	0	2	V/µs
Logic input voltage (IN1, IN2)	–0.3	7	V
Reference input pin voltage (VREF)	–0.3	6	V
Continuous phase node pin voltage (OUT1, OUT2)	–0.7	VM + 0.7	V
Current sense input pin voltage (ISEN) (2)	–0.5	1	V
Operating junction temperature, T_J	–40	150	°C
Storage temperature, T_{stg}	–65	150	°C

(1) Stresses beyond those listed under *Absolute Maximum Ratings* may cause permanent damage to the device. These are stress ratings only, which do not imply functional operation of the device at these or any other conditions beyond those indicated under *Recommended Operating Conditions*. Exposure to absolute-maximum-rated conditions for extended periods may affect device reliability.
(2) Transients of ±1 V for less than 25 ns are acceptable

Copyright © 2015, Texas Instruments Incorporated

6.2 ESD Ratings

			VALUE	UNIT
$V_{(ESD)}$	Electrostatic discharge	Human-body model (HBM), per ANSI/ESDA/JEDEC JS-001 (1)	±6000	V
		Charged-device model (CDM), per JEDEC specification JESD22-C101 (2)	±750	

(1) JEDEC document JEP155 states that 500-V HBM allows safe manufacturing with a standard ESD control process.
(2) JEDEC document JEP157 states that 250-V CDM allows safe manufacturing with a standard ESD control process.

6.3 Recommended Operating Conditions

over operating free-air temperature range (unless otherwise noted)

		MIN	NOM	MAX	UNIT
VM	Power supply voltage range	6.5		45	V
VREF	VREF input voltage range	0.3 (1)		5	V
V_I	Logic input voltage range (IN1, IN2)	0		5.5	V
f_{PWM}	Logic input PWM frequency (IN1, IN2)	0		100	kHz
I_{peak}	Peak output current (2)	0		3.6	A
T_A	Operating ambient temperature (2)	–40		125	°C

(1) Operational at VREF = 0 to 0.3 V, but accuracy is degraded
(2) Power dissipation and thermal limits must be observed

6.4 Thermal Information

THERMAL METRIC (1)		DRV8870 DDA (HSOP) 8 PINS	UNIT
$R_{\theta JA}$	Junction-to-ambient thermal resistance	41.1	°C/W
$R_{\theta JC(top)}$	Junction-to-case (top) thermal resistance	53.1	°C/W
$R_{\theta JB}$	Junction-to-board thermal resistance	23.1	°C/W
ψ_{JT}	Junction-to-top characterization parameter	8.2	°C/W
ψ_{JB}	Junction-to-board characterization parameter	23	°C/W
$R_{\theta JC(bot)}$	Junction-to-case (bottom) thermal resistance	2.7	°C/W

(1) For more information about traditional and new thermal metrics, see the *Semiconductor and IC Package Thermal Metrics* application report, SPRA953.

Copyright © 2015, Texas Instruments Incorporated

6.5 Electrical Characteristics

T_A = 25°C, over recommended operating conditions (unless otherwise noted)

PARAMETER		TEST CONDITIONS	MIN	TYP	MAX	UNIT
POWER SUPPLY (VM)						
VM	VM operating voltage		6.5		45	V
I_{VM}	VM operating supply current	VM = 12 V		3	10	mA
$I_{VMSLEEP}$	VM sleep current	VM = 12 V			10	µA
t_{ON} (1)	Turn-on time	VM > V_{UVLO} with IN1 or IN2 high		40	50	µs
LOGIC-LEVEL INPUTS (IN1, IN2)						
V_{IL}	Input logic low voltage				0.5	V
V_{IH}	Input logic high voltage		1.5			V
V_{HYS}	Input logic hysteresis			0.5		V
I_{IL}	Input logic low current	V_{IN} = 0 V	-1		1	µA
I_{IH}	Input logic high current	V_{IN} = 3.3 V		33	100	µA
R_{PD}	Pulldown resistance	to GND		100		kΩ
t_{PD}	Propagation delay	INx to OUTx change (see Figure 6)		0.7	1	µs
t_{sleep}	Time to sleep	Inputs low to sleep		1	1.5	ms
MOTOR DRIVER OUTPUTS (OUT1, OUT2)						
$R_{DS(ON)}$	High-side FET on resistance	VM = 24 V, I = 1 A, T_A = 25°C		307	360	mΩ
$R_{DS(ON)}$	Low-side FET on resistance	VM = 24 V, I = 1 A, T_A = 25°C		258	320	mΩ
t_{DEAD}	Output dead time			220		ns
V_d	Body diode forward voltage	I_{OUT} = 1 A		0.8	1	V
CURRENT REGULATION						
A_V	ISEN gain	VREF = 2.5 V	9.4	10	10.4	V/V
t_{OFF}	PWM off-time			25		µs
t_{BLANK}	PWM blanking time			2		µs
PROTECTION CIRCUITS						
V_{UVLO}	VM undervoltage lockout	VM falls until UVLO triggers		6.1	6.4	V
		VM rises until operation recovers		6.3	6.5	
$V_{UV,HYS}$	VM undervoltage hysteresis	Rising to falling threshold	100	180		mV
I_{OCP}	Overcurrent protection trip level		3.7	4.5	6.4	A
t_{OCP}	Overcurrent deglitch time			1.5		µs
t_{RETRY}	Overcurrent retry time			3		ms
T_{SD}	Thermal shutdown temperature		150	175		°C
T_{HYS}	Thermal shutdown hysteresis			40		°C

(1) t_{ON} applies when the device initially powers up, and when it exits sleep mode.

Copyright © 2015, Texas Instruments Incorporated

6.6 Typical Characteristics

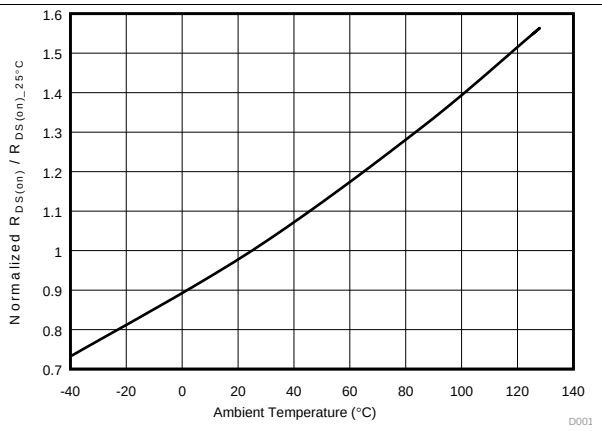

Figure 1. $R_{DS(on)}$ vs Temperature

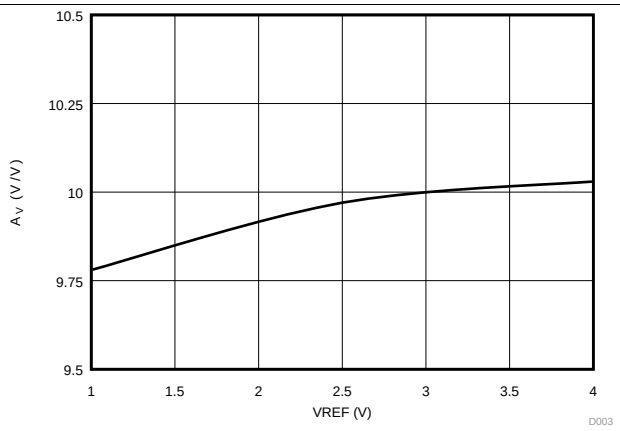

Figure 2. A_V vs VREF

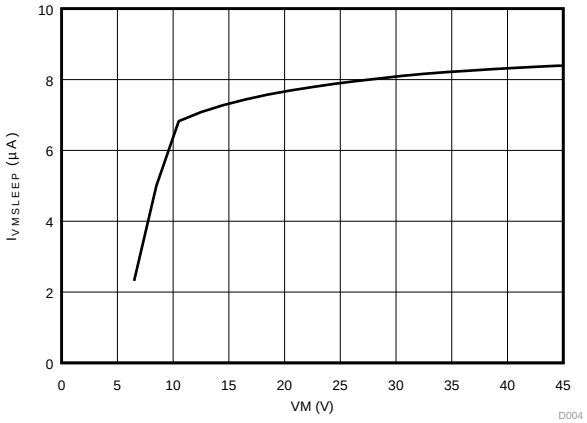

Figure 3. $I_{VMSLEEP}$ vs VM at 25°C

Copyright © 2015, Texas Instruments Incorporated

7 Detailed Description

7.1 Overview

The DRV8870 is an optimized 8-pin device for driving brushed DC motors with 6.5 to 45 V and up to 3.6-A peak current. The integrated current regulation restricts motor current to a predefined maximum. Two logic inputs control the H-bridge driver, which consists of four N-channel MOSFETs that have a typical $R_{ds(on)}$ of 565 mΩ (including one high-side and one low-side FET). A single power input, VM, serves as both device power and the motor winding bias voltage. The integrated charge pump of the device boosts VM internally and fully enhances the high-side FETs. Motor speed can be controlled with pulse-width modulation, at frequencies between 0 to 100 kHz. The device has an integrated sleep mode that is entered by bringing both inputs low. An assortment of protection features prevent the device from being damaged if a system fault occurs.

7.2 Functional Block Diagram

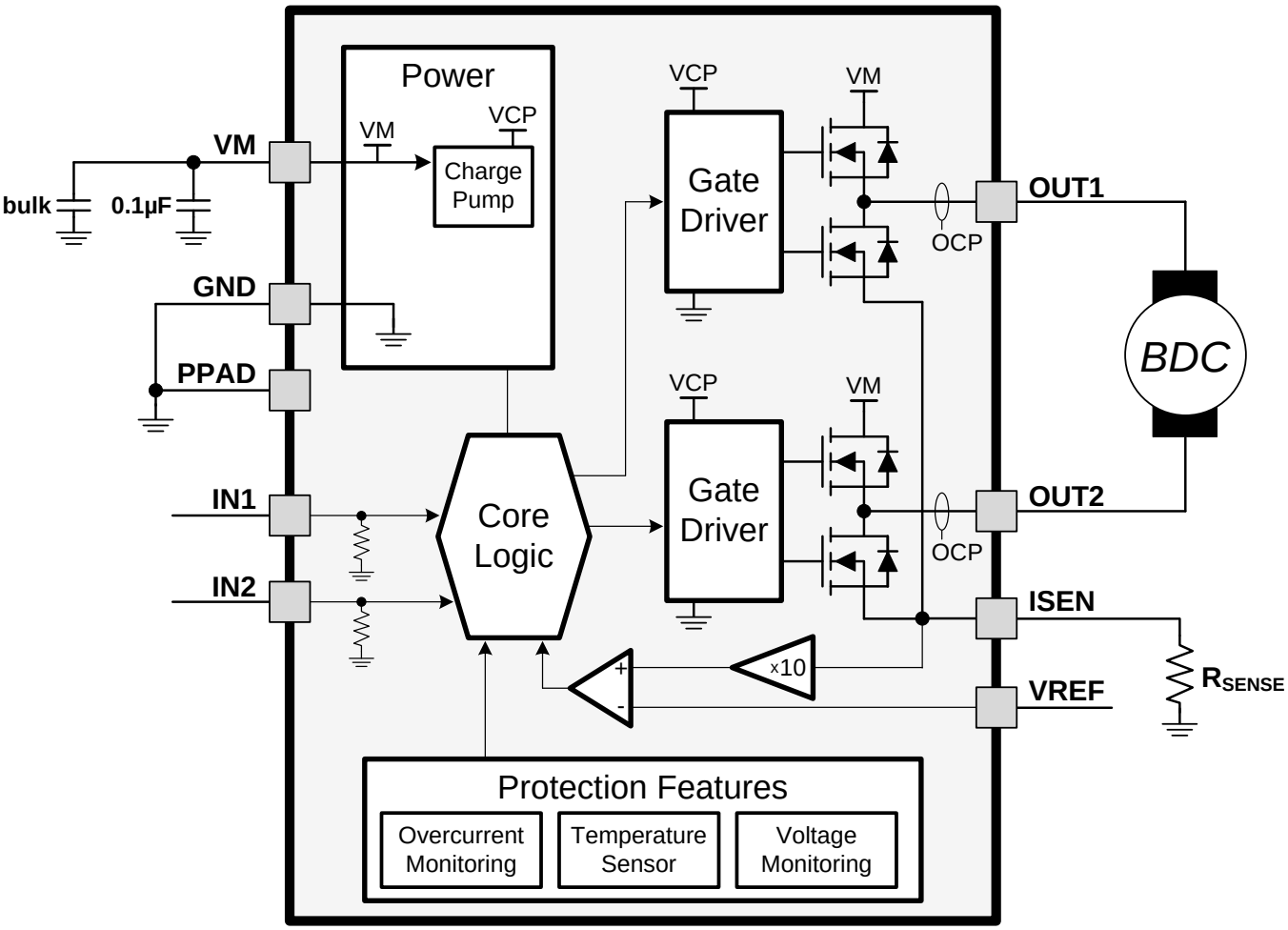

7.3 Feature Description

7.3.1 Bridge Control

The DRV8870 output consists of four N-channel MOSFETs that are designed to drive high current. They are controlled by the two logic inputs IN1 and IN2, according to Table 1.

Table 1. H-Bridge Control

IN1	IN2	OUT1	OUT2	DESCRIPTION
0	0	High-Z	High-Z	Coast; H-bridge disabled to High-Z (sleep entered after 1 ms)
0	1	L	H	Reverse (Current OUT2 → OUT1)
1	0	H	L	Forward (Current OUT1 → OUT2)
1	1	L	L	Brake; low-side slow decay

The inputs can be set to static voltages for 100% duty cycle drive, or they can be pulse-width modulated (PWM) for variable motor speed. When using PWM, it typically works best to switch between driving and braking. For example, to drive a motor forward with 50% of its max RPM, IN1 = 1 and IN2 = 0 during the driving period, and IN1 = 1 and IN2 = 1 during the other period. Alternatively, the coast mode (IN1 = 0, IN2 = 0) for *fast current decay* is also available. The input pins can be powered before VM is applied.

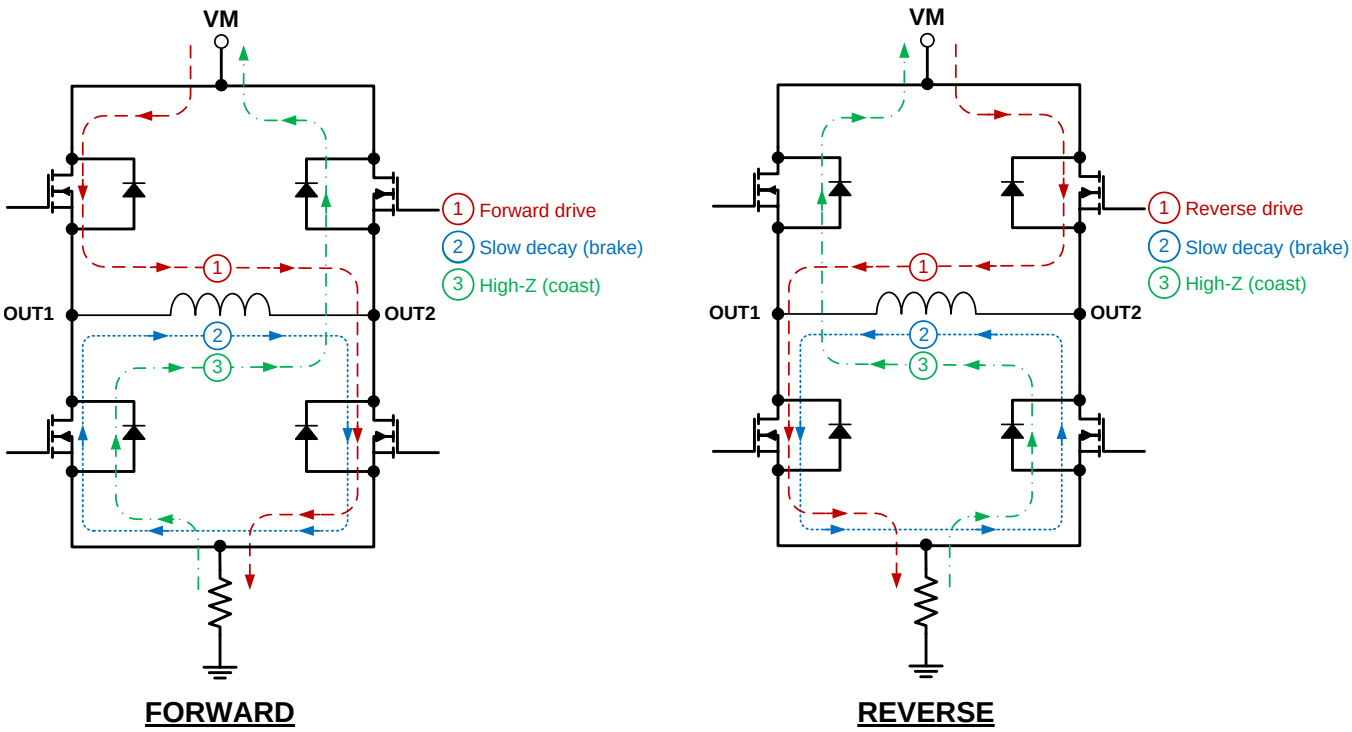

Figure 4. H-Bridge Current Paths

7.3.2 Sleep Mode

When IN1 and IN2 are both low for time t_{SLEEP} (typically 1 ms), the DRV8870 enters a low-power sleep mode, where the outputs remain High-Z and the device uses $I_{VMSLEEP}$ (microamps) of current. If the device is powered up while both inputs are low, sleep mode is immediately entered. After IN1 or IN2 are high for at least 5 µs, the device will be operational 50 µs (t_{ON}) later.

7.3.3 Current Regulation

The DRV8870 limits the output current based on the analog input VREF and the resistance of an external sense resistor on pin ISEN, according to this equation:

Copyright © 2015, Texas Instruments Incorporated

$$I_{TRIP}\ (A) = \frac{VREF\ (V)}{A_v \times R_{ISEN}\ (\Omega)} = \frac{VREF\ (V)}{10 \times R_{ISEN}\ (\Omega)} \quad (1)$$

For example, if VREF = 3.3 V and a R_{ISEN} = 0.15 Ω, the DRV8870 will limit motor current to 2.2 A no matter how much load torque is applied. For guidelines on selecting a sense resistor, see *Sense Resistor*.

When I_{TRIP} has been reached, the device enforces slow current decay by enabling both low-side FETs, and it does this for time t_{OFF} (typically 25 µs).

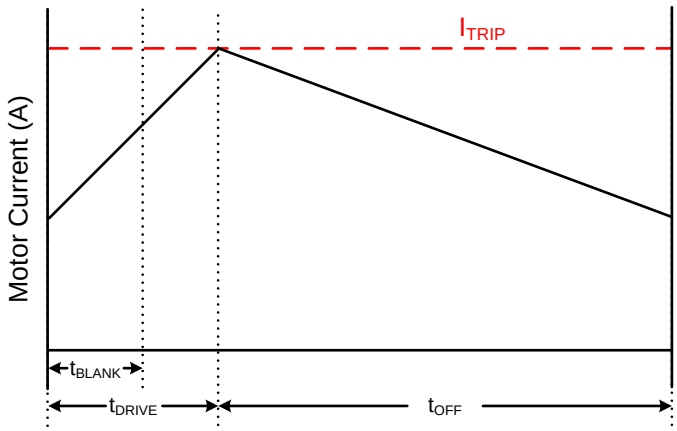

Figure 5. Current Regulation Time Periods

After t_{OFF} has elapsed, the output is re-enabled according to the two inputs INx. The drive time (t_{DRIVE}) until reaching another I_{TRIP} event heavily depends on the VM voltage, the motor's back-EMF, and the motor's inductance.

7.3.4 Dead Time

When an output changes from driving high to driving low, or driving low to driving high, dead time is automatically inserted to prevent shoot-through. t_{DEAD} is the time in the middle when the output is High-Z. If the output pin is measured during t_{DEAD}, the voltage will depend on the direction of current. If current is leaving the pin, the voltage will be a diode drop below ground. If current is entering the pin, the voltage will be a diode drop above VM. This diode is the body diode of the high-side or low-side FET.

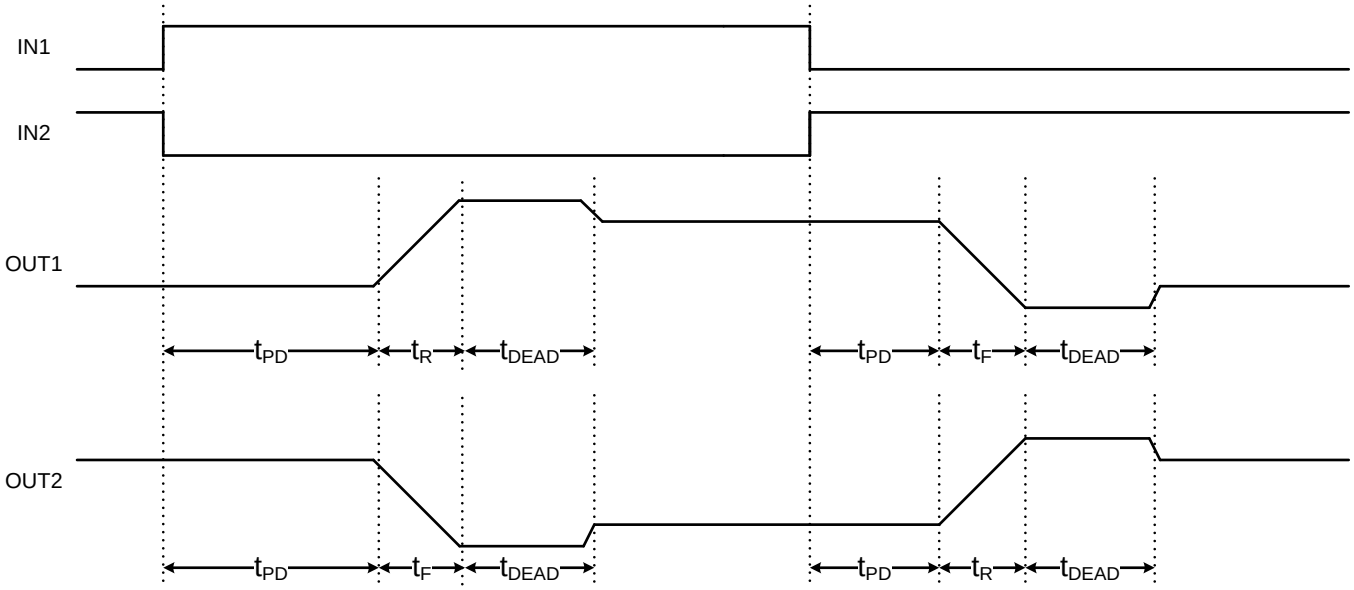

Figure 6. Propagation Delay Time

7.3.5 Protection Circuits

The DRV8870 is fully protected against VM undervoltage, overcurrent, and overtemperature events.

7.3.5.1 VM Undervoltage Lockout (UVLO)

If at any time the voltage on the VM pin falls below the undervoltage lockout threshold voltage, all FETs in the H-bridge will be disabled. Operation will resume when VM rises above the UVLO threshold.

7.3.5.2 Overcurrent Protection (OCP)

If the output current exceeds the OCP threshold I_{OCP} for longer than t_{OCP}, all FETs in the H-bridge are disabled for a duration of t_{RETRY}. After that, the H-bridge will be re-enabled according to the state of the INx pins. If the overcurrent fault is still present, the cycle repeats; otherwise normal device operation resumes.

7.3.5.3 Thermal Shutdown (TSD)

If the die temperature exceeds safe limits, all FETs in the H-bridge will be disabled. After the die temperature has fallen to a safe level, operation automatically resumes.

Table 2. Protection Functionality

FAULT	CONDITION	H-BRIDGE BECOMES	RECOVERY
VM undervoltage lockout (UVLO)	$VM < V_{UVLO}$	Disabled	$VM > V_{UVLO}$
Overcurrent (OCP)	$I_{OUT} > I_{OCP}$	Disabled	t_{RETRY}
Thermal Shutdown (TSD)	$T_J > 150°C$	Disabled	$T_J < T_{SD} – T_{HYS}$

7.4 Device Functional Modes

The DRV8870 can be used in multiple ways to drive a brushed DC motor.

7.4.1 PWM With Current Regulation

This scheme uses all of the device's capabilities. I_{TRIP} is set above the normal operating current, and high enough to achieve an adequate spin-up time, but low enough to constrain current to a desired level. Motor speed is controlled by the duty cycle of one of the inputs, while the other input is static. Brake/slow decay is typically used during the off-time.

7.4.2 PWM Without Current Regulation

If current regulation is not needed, pin ISEN should be directly connected to the PCB ground plane. VREF must still be 0.3 to 5 V, and larger voltages provide greater noise margin. This mode provides the highest possible peak current: up to 3.6 A for a few hundred milliseconds (depending on PCB characteristics and the ambient temperature). If current exceeds 3.6 A, the device might reach overcurrent protection (OCP) or overtemperature shutdown (TSD). If that happens, the device disables and protects itself for about 3 ms (t_{RETRY}) and then resumes normal operation.

7.4.3 Static Inputs With Current Regulation

IN1 and IN2 can be set high and low for 100% duty cycle drive, and I_{TRIP} can be used to control the motor's current, speed, and torque capability.

7.4.4 VM Control

In some systems it is desirable to vary VM as a means of changing motor speed. See *Motor Voltage* for more information.

Copyright © 2015, Texas Instruments Incorporated

8 Application and Implementation

NOTE

Information in the following applications sections is not part of the TI component specification, and TI does not warrant its accuracy or completeness. TI's customers are responsible for determining suitability of components for their purposes. Customers should validate and test their design implementation to confirm system functionality.

8.1 Application Information

The DRV8870 is typically used to drive one brushed DC motor.

8.2 Typical Application

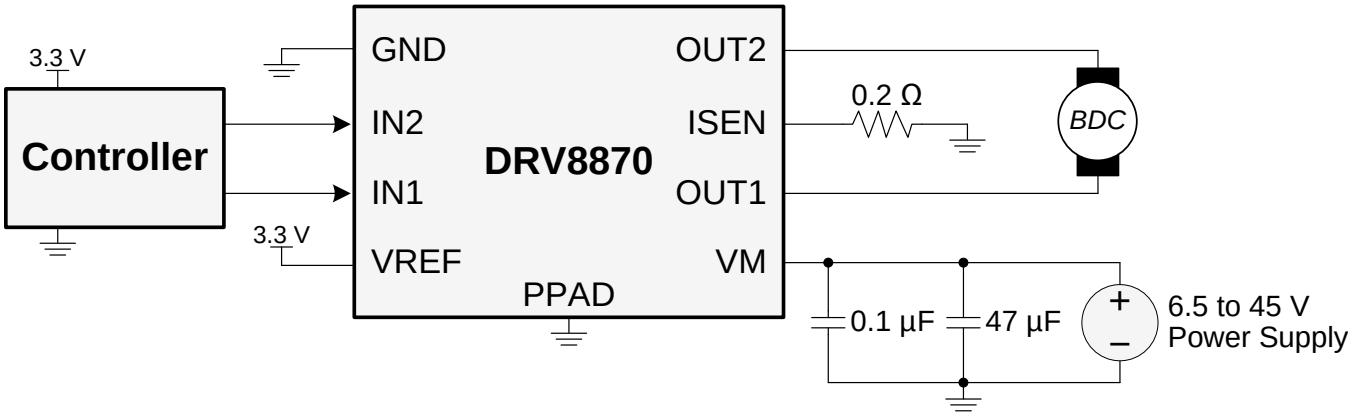

Figure 7. Typical Connections

8.2.1 Design Requirements

Table 3 lists the design parameters.

Table 3. Design Parameters

DESIGN PARAMETER	REFERENCE	EXAMPLE VALUE
Motor voltage	V_M	24 V
Motor RMS current	I_{RMS}	0.8 A
Motor startup current	I_{START}	2 A
Motor current trip point	I_{TRIP}	2.2 A
VREF voltage	VREF	3.3 V
Sense resistance	R_{ISEN}	0.15 Ω
PWM frequency	f_{PWM}	5 kHz

8.2.2 Detailed Design Procedure

8.2.2.1 Motor Voltage

The motor voltage to use will depend on the ratings of the motor selected and the desired RPM. A higher voltage spins a brushed DC motor faster with the same PWM duty cycle applied to the power FETs. A higher voltage also increases the rate of current change through the inductive motor windings.

8.2.2.2 Drive Current

The current path is through the high-side sourcing DMOS power driver, motor winding, and low-side sinking DMOS power driver. Power dissipation losses in one source and sink DMOS power driver are shown in the following equation.

$$P_D = I^2 \left(R_{DS(on)Source} + R_{DS(on)Sink}\right) \quad (2)$$

The DRV8870 has been measured to be capable of 2-A RMS current at 25°C on standard FR-4 PCBs. The max RMS current will vary based on PCB design and the ambient temperature.

8.2.2.3 Sense Resistor

For optimal performance, it is important for the sense resistor to be:

- Surface-mount
- Low inductance
- Rated for high enough power
- Placed closely to the motor driver

The power dissipated by the sense resistor equals $I_{RMS}^2 \times R$. For example, if peak motor current is 3 A, RMS motor current is 1.5 A, and a 0.2-Ω sense resistor is used, the resistor will dissipate 1.5 A^2 × 0.2 Ω = 0.45 W. The power quickly increases with higher current levels.

Resistors typically have a rated power within some ambient temperature range, along with a derated power curve for high ambient temperatures. When a PCB is shared with other components generating heat, the system designer should add margin. It is always best to measure the actual sense resistor temperature in a final system.

Because power resistors are larger and more expensive than standard resistors, it is common practice to use multiple standard resistors in parallel, between the sense node and ground. This distributes the current and heat dissipation.

8.2.3 Application Curves

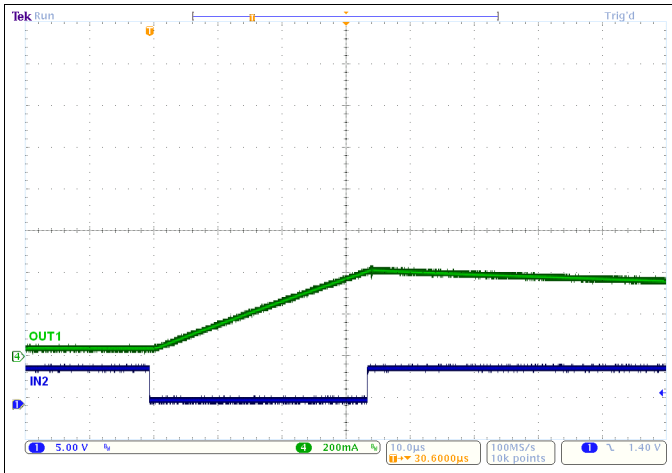

Figure 8. Current Ramp With a 2-Ω, 1 mH, RL Load and VM = 12 V

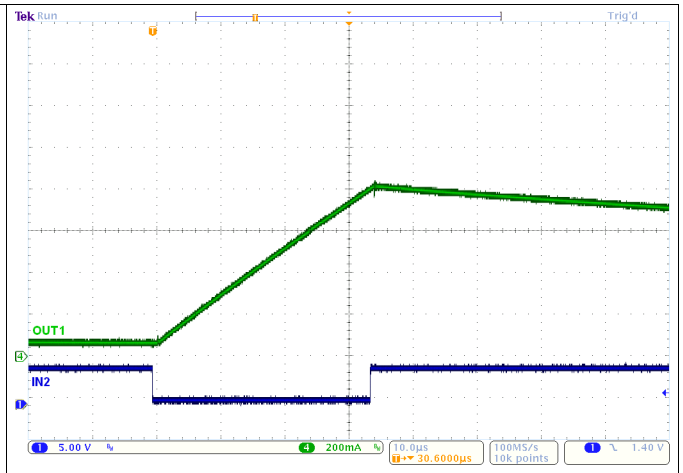

Figure 9. Current Ramp With a 2-Ω, 1 mH, RL Load and VM = 24 V

Copyright © 2015, Texas Instruments Incorporated

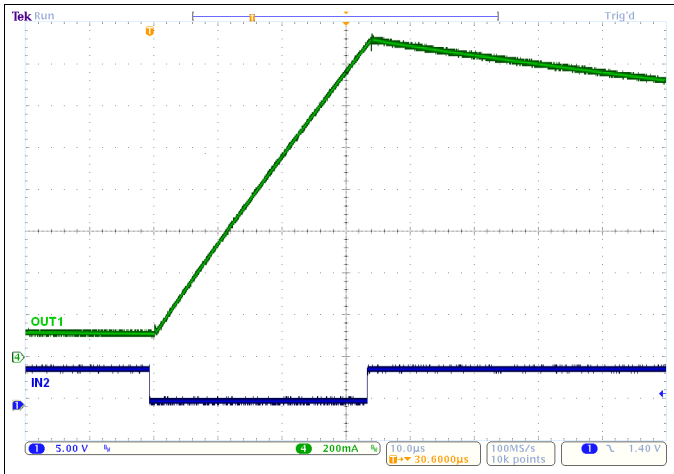

Figure 10. Current Ramp With a 2-Ω, 1 mH, RL Load and VM = 45 V

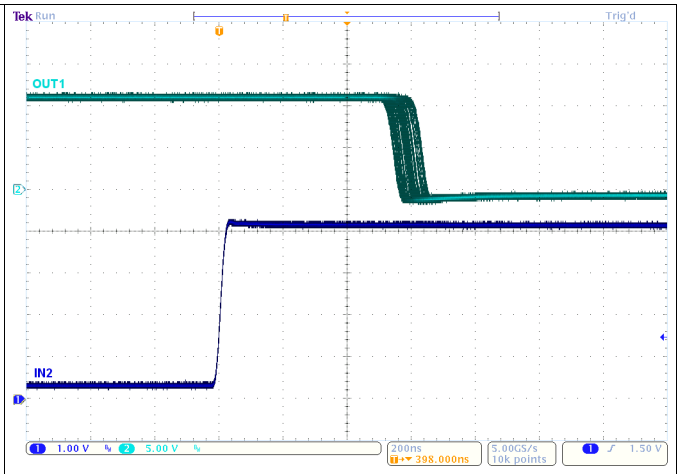

Figure 11. t_{PD}

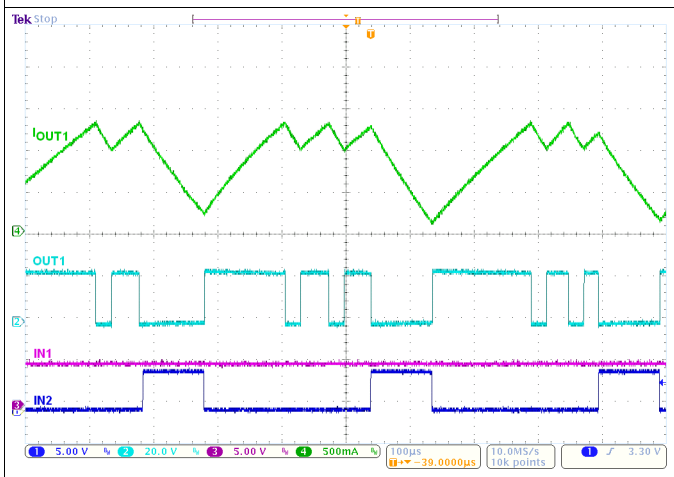

Figure 12. Current Regulation With VREF = 2 V and 150 mΩ

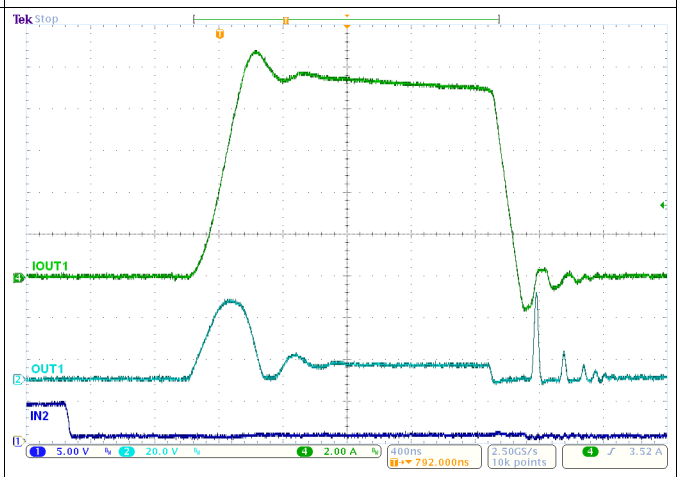

Figure 13. OCP With 45 V and the Outputs Shorted Together

Copyright © 2015, Texas Instruments Incorporated

9 Power Supply Recommendations

9.1 Bulk Capacitance

Having appropriate local bulk capacitance is an important factor in motor drive system design. It is generally beneficial to have more bulk capacitance, while the disadvantages are increased cost and physical size.

The amount of local capacitance needed depends on a variety of factors, including:

- The highest current required by the motor system
- The power supply's capacitance and ability to source current
- The amount of parasitic inductance between the power supply and motor system
- The acceptable voltage ripple
- The type of motor used (brushed DC, brushless DC, stepper)
- The motor braking method

The inductance between the power supply and motor drive system will limit the rate current can change from the power supply. If the local bulk capacitance is too small, the system will respond to excessive current demands or dumps from the motor with a change in voltage. When adequate bulk capacitance is used, the motor voltage remains stable and high current can be quickly supplied.

The data sheet generally provides a recommended value, but system-level testing is required to determine the appropriate sized bulk capacitor.

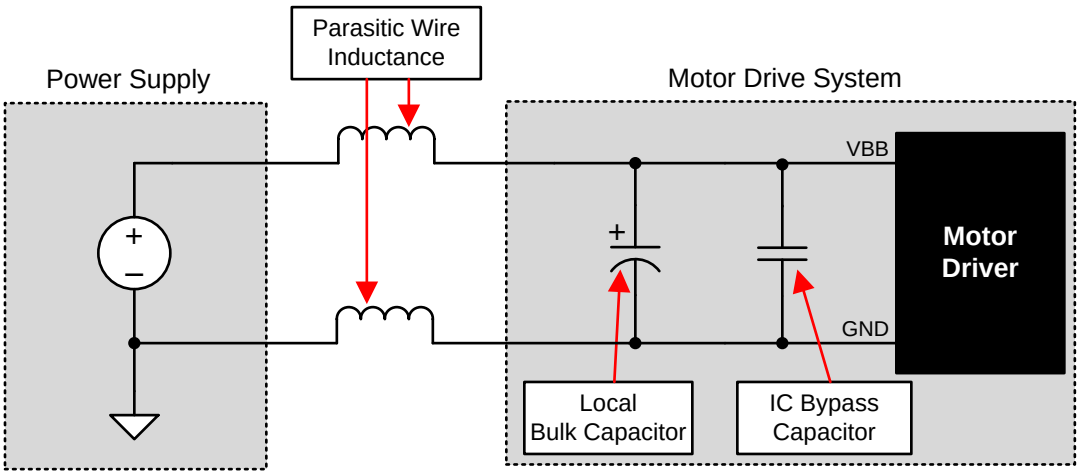

Figure 14. Example Setup of Motor Drive System With External Power Supply

The voltage rating for bulk capacitors should be higher than the operating voltage, to provide margin for cases when the motor transfers energy to the supply.

Copyright © 2015, Texas Instruments Incorporated

10 Layout

10.1 Layout Guidelines

The bulk capacitor should be placed to minimize the distance of the high-current path through the motor driver device. The connecting metal trace widths should be as wide as possible, and numerous vias should be used when connecting PCB layers. These practices minimize inductance and allow the bulk capacitor to deliver high current.

Small-value capacitors should be ceramic, and placed closely to device pins.

The high-current device outputs should use wide metal traces.

The device thermal pad should be soldered to the PCB top-layer ground plane. Multiple vias should be used to connect to a large bottom-layer ground plane. The use of large metal planes and multiple vias help dissipate the $I^2 \times R_{DS(on)}$ heat that is generated in the device.

10.2 Layout Example

Recommended layout and component placement is shown in the following diagram.

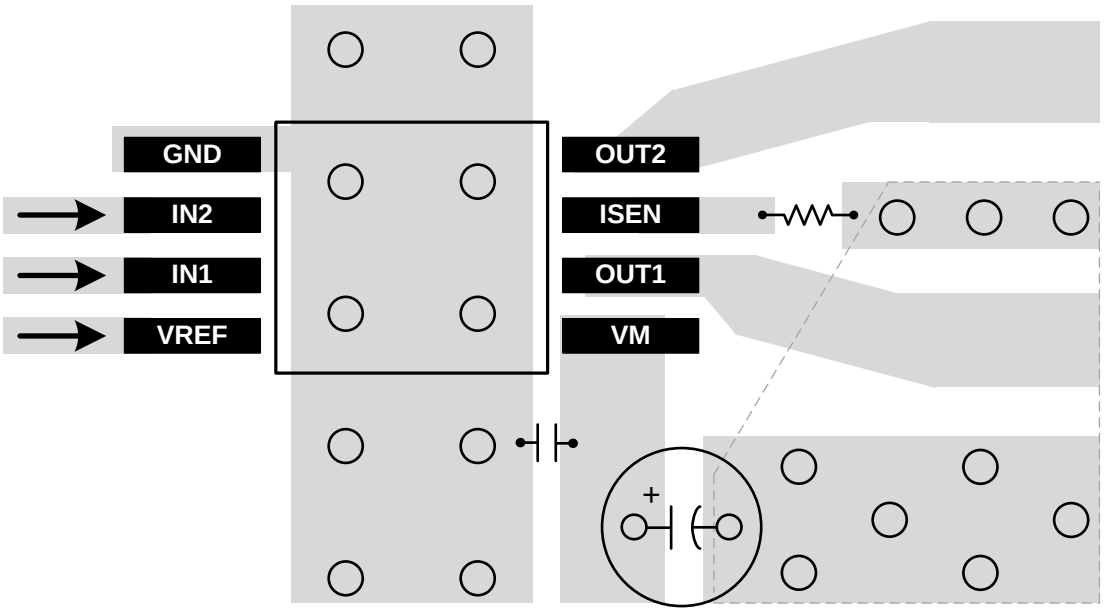

Figure 15. Layout Recommendation

10.3 Thermal Considerations

The DRV8870 device has thermal shutdown (TSD) as described in the *Thermal Shutdown (TSD)* section. If the die temperature exceeds approximately 175°C, the device is disabled until the temperature drops below the temperature hysteresis level.

Any tendency of the device to enter TSD is an indication of either excessive power dissipation, insufficient heatsinking, or too high of an ambient temperature.

10.4 Power Dissipation

Power dissipation in the DRV8870 device is dominated by the power dissipated in the output FET resistance, $R_{DS(on)}$. Use the equation in the *Drive Current* section to calculate the estimated average power dissipation when driving a load.

Note that at startup, the current is much higher than normal running current; this peak current and its duration must be also be considered.

Copyright © 2015, Texas Instruments Incorporated

Power Dissipation (continued)

The maximum amount of power that can be dissipated in the device is dependent on ambient temperature and heatsinking.

NOTE

$R_{DS(on)}$ increases with temperature, so as the device heats, the power dissipation increases. This fact must be taken into consideration when sizing the heatsink.

The power dissipation of the DRV8870 is a function of RMS motor current and the FET resistance ($R_{DS(ON)}$) of each output.

$$\text{Power} \approx I_{RMS}^2 \times \left(\text{High-side } R_{DS(ON)} + \text{ Low-side } R_{DS(ON)}\right) \tag{3}$$

For this example, the ambient temperature is 58°C, and the junction temperature reaches 80°C. At 58°C, the sum of $R_{DS(ON)}$ is about 0.72 Ω. With an example motor current of 0.8 A, the dissipated power in the form of heat will be 0.8 A^2 × 0.72 Ω = 0.46 W.

The temperature that the DRV8870 reaches will depend on the thermal resistance to the air and PCB. It is important to solder the device PowerPAD to the PCB ground plane, with vias to the top and bottom board layers, in order dissipate heat into the PCB and reduce the device temperature. In the example used here, the DRV8870 had an effective thermal resistance $R_{\theta JA}$ of 48°C/W, and:

$$T_J = T_A + (P_D \times R_{\theta JA}) = 58°C + (0.46\ W \times 48°C/W) = 80°C \tag{4}$$

10.4.1 Heatsinking

The PowerPAD package uses an exposed pad to remove heat from the device. For proper operation, this pad must be thermally connected to copper on the PCB to dissipate heat. On a multi-layer PCB with a ground plane, this connection can be accomplished by adding a number of vias to connect the thermal pad to the ground plane.

On PCBs without internal planes, a copper area can be added on either side of the PCB to dissipate heat. If the copper area is on the opposite side of the PCB from the device, thermal vias are used to transfer the heat between top and bottom layers.

For details about how to design the PCB, refer to the TI application report, *PowerPAD™ Thermally Enhanced Package* (SLMA002), and the TI application brief, *PowerPAD Made Easy™* (SLMA004), available at www.ti.com. In general, the more copper area that can be provided, the more power can be dissipated.

版权 © 2015, Texas Instruments Incorporated

11 器件和文档支持

11.1 文档支持

11.1.1 相关文档

- 应用报告*《PowerPAD™ 耐热增强型封装》*，SLMA002
- 应用简介*《PowerPAD™ 速成》*，SLMA004
- 应用报告*《电流再循环和衰减模式》*，SLVA321
- 应用报告*《计算电机驱动器的功耗》*，SLVA504
- 应用报告*《了解电机驱动器的额定电流》*，SLVA505

11.2 社区资源

The following links connect to TI community resources. Linked contents are provided "AS IS" by the respective contributors. They do not constitute TI specifications and do not necessarily reflect TI's views; see TI's Terms of Use.

TI E2E™ Online Community ***TI's Engineer-to-Engineer (E2E) Community.*** Created to foster collaboration among engineers. At e2e.ti.com, you can ask questions, share knowledge, explore ideas and help solve problems with fellow engineers.

Design Support ***TI's Design Support*** Quickly find helpful E2E forums along with design support tools and contact information for technical support.

11.3 商标

PowerPAD, E2E are trademarks of Texas Instruments.
All other trademarks are the property of their respective owners.

11.4 静电放电警告

这些装置包含有限的内置 ESD 保护。 存储或装卸时，应将导线一起截短或将装置放置于导电泡棉中，以防止 MOS 门极遭受静电损伤。

11.5 Glossary

SLYZ022 — *TI Glossary*.

This glossary lists and explains terms, acronyms, and definitions.

12 机械、封装和可订购信息

以下页中包括机械、封装和可订购信息。 这些信息是针对指定器件可提供的最新数据。 这些数据会在无通知且不对本文档进行修订的情况下发生改变。 欲获得该数据表的浏览器版本，请查阅左侧的导航栏。

重要声明

德州仪器(TI) 及其下属子公司有权根据 JESD46 最新标准, 对所提供的产品和服务进行更正、修改、增强、改进或其它更改， 并有权根据 JESD48 最新标准中止提供任何产品和服务。客户在下订单前应获取最新的相关信息, 并验证这些信息是否完整且是最新的。所有产品的销售都遵循在订单确认时所提供的TI 销售条款与条件。

TI 保证其所销售的组件的性能符合产品销售时 TI 半导体产品销售条件与条款的适用规范。仅在 TI 保证的范围内，且 TI 认为 有必要时才会使用测试或其它质量控制技术。除非适用法律做出了硬性规定，否则没有必要对每种组件的所有参数进行测试。

TI 对应用帮助或客户产品设计不承担任何义务。客户应对其使用 TI 组件的产品和应用自行负责。为尽量减小与客户产品和应 用相关的风险，客户应提供充分的设计与操作安全措施。

TI 不对任何 TI 专利权、版权、屏蔽作品权或其它与使用了 TI 组件或服务的组合设备、机器或流程相关的 TI 知识产权中授予 的直接或隐含权限作出任何保证或解释。TI 所发布的与第三方产品或服务有关的信息，不能构成从 TI 获得使用这些产品或服 务的许可、授权、或认可。使用此类信息可能需要获得第三方的专利权或其它知识产权方面的许可，或是 TI 的专利权或其它 知识产权方面的许可。

对于 TI 的产品手册或数据表中 TI 信息的重要部分，仅在没有对内容进行任何篡改且带有相关授权、条件、限制和声明的情况 下才允许进行复制。TI 对此类篡改过的文件不承担任何责任或义务。复制第三方的信息可能需要服从额外的限制条件。

在转售 TI 组件或服务时，如果对该组件或服务参数的陈述与 TI 标明的参数相比存在差异或虚假成分，则会失去相关 TI 组件 或服务的所有明示或暗示授权，且这是不正当的、欺诈性商业行为。TI 对任何此类虚假陈述均不承担任何责任或义务。

客户认可并同意，尽管任何应用相关信息或支持仍可能由 TI 提供，但他们将独力负责满足与其产品及在其应用中使用 TI 产品 相关的所有法律、法规和安全相关要求。客户声明并同意，他们具备制定与实施安全措施所需的全部专业技术和知识，可预见 故障的危险后果、监测故障及其后果、降低有可能造成人身伤害的故障的发生机率并采取适当的补救措施。客户将全额赔偿因 在此类安全关键应用中使用任何 TI 组件而对 TI 及其代理造成的任何损失。

在某些场合中，为了推进安全相关应用有可能对 TI 组件进行特别的促销。TI 的目标是利用此类组件帮助客户设计和创立其特 有的可满足适用的功能安全性标准和要求的终端产品解决方案。尽管如此，此类组件仍然服从这些条款。

TI 组件未获得用于 FDA Class III（或类似的生命攸关医疗设备）的授权许可，除非各方授权官员已经达成了专门管控此类使 用的特别协议。

只有那些 TI 特别注明属于军用等级或“增强型塑料”的 TI 组件才是设计或专门用于军事/航空应用或环境的。购买者认可并同 意，对并非指定面向军事或航空航天用途的 TI 组件进行军事或航空航天方面的应用，其风险由客户单独承担，并且由客户独 力负责满足与此类使用相关的所有法律和法规要求。

TI 已明确指定符合 ISO/TS16949 要求的产品，这些产品主要用于汽车。在任何情况下，因使用非指定产品而无法达到 ISO/TS16949 要求，TI不承担任何责任。

	产品		应用
数字音频	www.ti.com.cn/audio	通信与电信	www.ti.com.cn/telecom
放大器和线性器件	www.ti.com.cn/amplifiers	计算机及周边	www.ti.com.cn/computer
数据转换器	www.ti.com.cn/dataconverters	消费电子	www.ti.com/consumer-apps
DLP® 产品	www.dlp.com	能源	www.ti.com/energy
DSP - 数字信号处理器	www.ti.com.cn/dsp	工业应用	www.ti.com.cn/industrial
时钟和计时器	www.ti.com.cn/clockandtimers	医疗电子	www.ti.com.cn/medical
接口	www.ti.com.cn/interface	安防应用	www.ti.com.cn/security
逻辑	www.ti.com.cn/logic	汽车电子	www.ti.com.cn/automotive
电源管理	www.ti.com.cn/power	视频和影像	www.ti.com.cn/video
微控制器 (MCU)	www.ti.com.cn/microcontrollers		
RFID 系统	www.ti.com.cn/rfidsys		
OMAP应用处理器	www.ti.com/omap		
无线连通性	www.ti.com.cn/wirelessconnectivity	德州仪器在线技术支持社区	www.deyisupport.com

邮寄地址： 上海市浦东新区世纪大道1568 号，中建大厦32 楼邮政编码： 200122
Copyright © 2015, 德州仪器半导体技术（上海）有限公司

PACKAGING INFORMATION

Orderable Device	Status (1)	Package Type	Package Drawing	Pins	Package Qty	Eco Plan (2)	Lead finish/ Ball material (6)	MSL Peak Temp (3)	Op Temp (°C)	Device Marking (4/5)	Samples
DRV8870DDA	ACTIVE	SO PowerPAD	DDA	8	75	RoHS & Green	NIPDAUAG	Level-2-260C-1 YEAR	-40 to 125	8870	Samples
DRV8870DDAR	ACTIVE	SO PowerPAD	DDA	8	2500	RoHS & Green	NIPDAUAG	Level-2-260C-1 YEAR	-40 to 125	8870	Samples

(1) The marketing status values are defined as follows:
ACTIVE: Product device recommended for new designs.
LIFEBUY: TI has announced that the device will be discontinued, and a lifetime-buy period is in effect.
NRND: Not recommended for new designs. Device is in production to support existing customers, but TI does not recommend using this part in a new design.
PREVIEW: Device has been announced but is not in production. Samples may or may not be available.
OBSOLETE: TI has discontinued the production of the device.

(2) **RoHS:** TI defines "RoHS" to mean semiconductor products that are compliant with the current EU RoHS requirements for all 10 RoHS substances, including the requirement that RoHS substance do not exceed 0.1% by weight in homogeneous materials. Where designed to be soldered at high temperatures, "RoHS" products are suitable for use in specified lead-free processes. TI may reference these types of products as "Pb-Free".
RoHS Exempt: TI defines "RoHS Exempt" to mean products that contain lead but are compliant with EU RoHS pursuant to a specific EU RoHS exemption.
Green: TI defines "Green" to mean the content of Chlorine (Cl) and Bromine (Br) based flame retardants meet JS709B low halogen requirements of <=1000ppm threshold. Antimony trioxide based flame retardants must also meet the <=1000ppm threshold requirement.

(3) MSL, Peak Temp. - The Moisture Sensitivity Level rating according to the JEDEC industry standard classifications, and peak solder temperature.

(4) There may be additional marking, which relates to the logo, the lot trace code information, or the environmental category on the device.

(5) Multiple Device Markings will be inside parentheses. Only one Device Marking contained in parentheses and separated by a "~" will appear on a device. If a line is indented then it is a continuation of the previous line and the two combined represent the entire Device Marking for that device.

(6) Lead finish/Ball material - Orderable Devices may have multiple material finish options. Finish options are separated by a vertical ruled line. Lead finish/Ball material values may wrap to two lines if the finish value exceeds the maximum column width.

Important Information and Disclaimer: The information provided on this page represents TI's knowledge and belief as of the date that it is provided. TI bases its knowledge and belief on information provided by third parties, and makes no representation or warranty as to the accuracy of such information. Efforts are underway to better integrate information from third parties. TI has taken and continues to take reasonable steps to provide representative and accurate information but may not have conducted destructive testing or chemical analysis on incoming materials and chemicals. TI and TI suppliers consider certain information to be proprietary, and thus CAS numbers and other limited information may not be available for release.

In no event shall TI's liability arising out of such information exceed the total purchase price of the TI part(s) at issue in this document sold by TI to Customer on an annual basis.

DDA 8 PowerPAD™ SOIC - 1.7 mm max height

PLASTIC SMALL OUTLINE

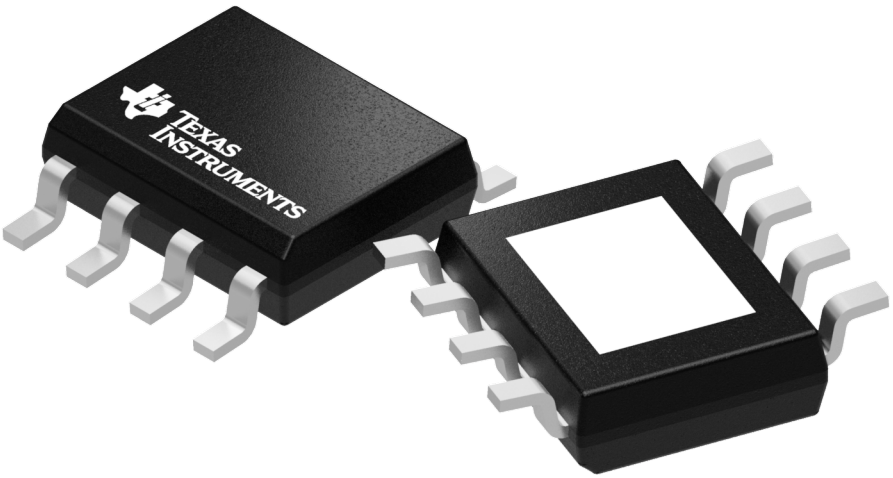

Images above are just a representation of the package family, actual package may vary.
Refer to the product data sheet for package details.

DDA (R-PDSO-G8) PowerPAD™ PLASTIC SMALL-OUTLINE

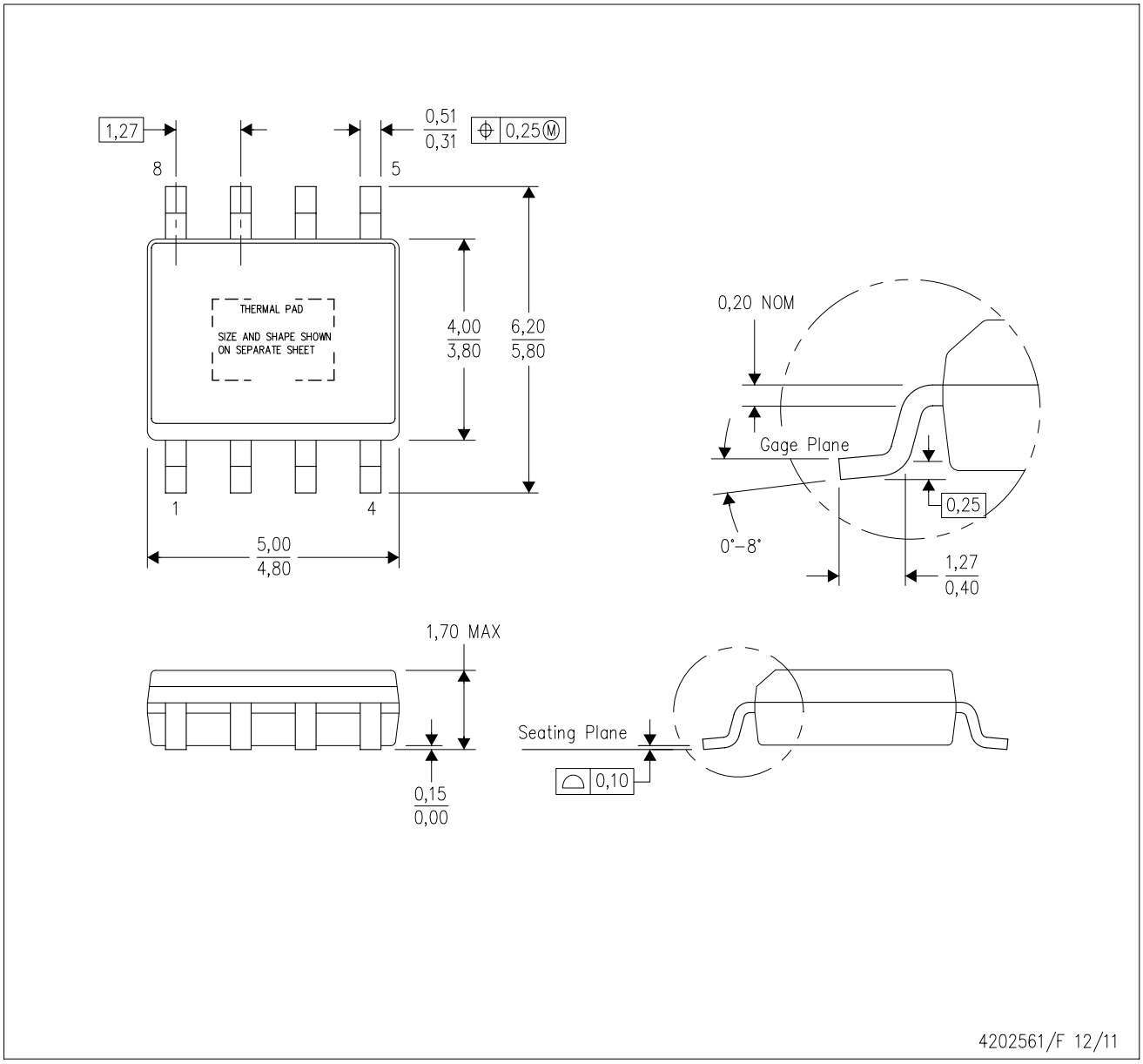

NOTES:
A. All linear dimensions are in millimeters. Dimensioning and tolerancing per ASME Y14.5–1994.
B. This drawing is subject to change without notice.
C. Body dimensions do not include mold flash or protrusion not to exceed 0,15.
D. This package is designed to be soldered to a thermal pad on the board. Refer to Technical Brief, PowerPad Thermally Enhanced Package, Texas Instruments Literature No. SLMA002 for information regarding recommended board layout. This document is available at www.ti.com <http://www.ti.com>.
E. See the additional figure in the Product Data Sheet for details regarding the exposed thermal pad features and dimensions.
F. This package complies to JEDEC MS-012 variation BA

PowerPAD is a trademark of Texas Instruments.

DDA (R-PDSO-G8) PowerPAD™ PLASTIC SMALL OUTLINE

THERMAL INFORMATION

This PowerPAD™ package incorporates an exposed thermal pad that is designed to be attached to a printed circuit board (PCB). The thermal pad must be soldered directly to the PCB. After soldering, the PCB can be used as a heatsink. In addition, through the use of thermal vias, the thermal pad can be attached directly to the appropriate copper plane shown in the electrical schematic for the device, or alternatively, can be attached to a special heatsink structure designed into the PCB. This design optimizes the heat transfer from the integrated circuit (IC).

For additional information on the PowerPAD package and how to take advantage of its heat dissipating abilities, refer to Technical Brief, PowerPAD Thermally Enhanced Package, Texas Instruments Literature No. SLMA002 and Application Brief, PowerPAD Made Easy, Texas Instruments Literature No. SLMA004. Both documents are available at www.ti.com.

The exposed thermal pad dimensions for this package are shown in the following illustration.

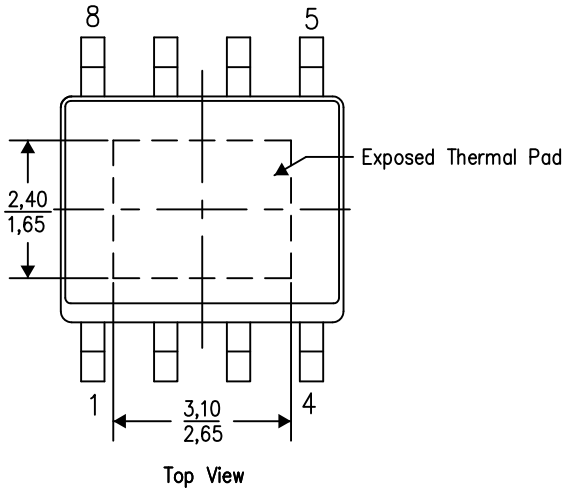

Exposed Thermal Pad Dimensions

4206322-6/L 05/12

NOTE: A. All linear dimensions are in millimeters

PowerPAD is a trademark of Texas Instruments

DDA (R–PDSO–G8) PowerPAD™ PLASTIC SMALL OUTLINE

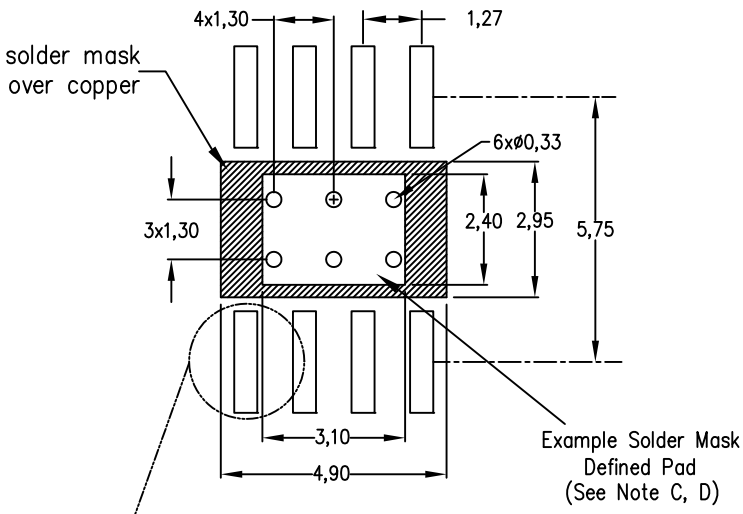

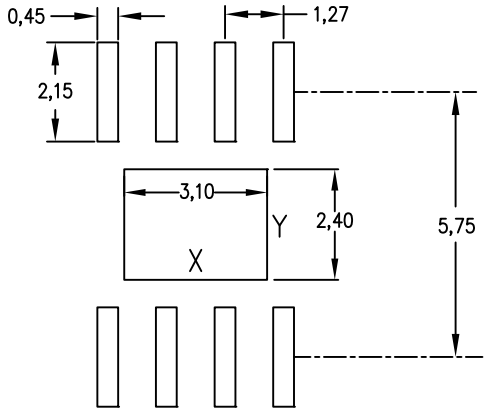

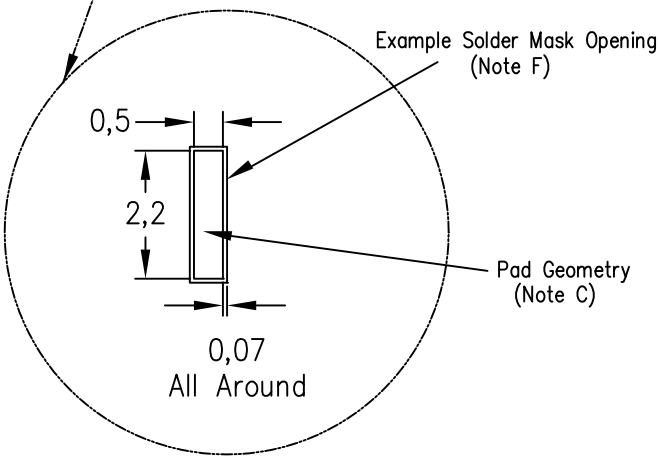

Center Power Pad Solder Stencil Opening		
Stencil Thickness	X	Y
0.1mm	3.3	2.6
0.127mm	3.1	2.4
0.152mm	2.9	2.2
0.178mm	2.8	2.1

4208951–6/D 04/12

NOTES:
A. All linear dimensions are in millimeters.
B. This drawing is subject to change without notice.
C. Publication IPC–7351 is recommended for alternate designs.
D. This package is designed to be soldered to a thermal pad on the board. Refer to Technical Brief, PowerPad Thermally Enhanced Package, Texas Instruments Literature No. SLMA002, SLMA004, and also the Product Data Sheets for specific thermal information, via requirements, and recommended board layout. These documents are available at www.ti.com <http://www.ti.com>. Publication IPC–7351 is recommended for alternate designs.
E. Laser cutting apertures with trapezoidal walls and also rounding corners will offer better paste release. Customers should contact their board assembly site for stencil design recommendations. Example stencil design based on a 50% volumetric metal load solder paste. Refer to IPC–7525 for other stencil recommendations.
F. Customers should contact their board fabrication site for solder mask tolerances between and around signal pads.

PowerPAD is a trademark of Texas Instruments.

重要声明和免责声明

TI 均以“原样”提供技术性及可靠性数据（包括数据表）、设计资源（包括参考设计）、应用或其他设计建议、网络工具、安全信息和其他资源，不保证其中不含任何瑕疵，且不做任何明示或暗示的担保，包括但不限于对适销性、适合某特定用途或不侵犯任何第三方知识产权的暗示担保。

所述资源可供专业开发人员应用TI 产品进行设计使用。您将对以下行为独自承担全部责任：(1) 针对您的应用选择合适的TI 产品；(2) 设计、验证并测试您的应用；(3) 确保您的应用满足相应标准以及任何其他安全、安保或其他要求。所述资源如有变更，恕不另行通知。TI 对您使用所述资源的授权仅限于开发资源所涉及TI 产品的相关应用。除此之外不得复制或展示所述资源，也不提供其它TI或任何第三方的知识产权授权许可。如因使用所述资源而产生任何索赔、赔偿、成本、损失及债务等，TI对此概不负责，并且您须赔偿由此对TI 及其代表造成的损害。

TI 所提供产品均受TI 的销售条款 (http://www.ti.com.cn/zh-cn/legal/termsofsale.html) 以及ti.com.cn上或随附TI产品提供的其他可适用条款的约束。TI提供所述资源并不扩展或以其他方式更改TI 针对TI 产品所发布的可适用的担保范围或担保免责声明。

邮寄地址：上海市浦东新区世纪大道 1568 号中建大厦 32 楼，邮政编码：200122
Copyright © 2020 德州仪器半导体技术（上海）有限公司