DRV835x 100V 三相智能栅极驱动器

1 特性

- 9V 至 100V 三半桥栅极驱动器
  - 可选的集成降压稳压器
  - 可选的三个低侧电流分流放大器
- 智能栅极驱动架构
  - 可调转换率控制，可实现优异的 EMI 性能
  - V_{GS} 握手和最小死区时间插入，可避免发生击穿
  - 50mA 至 1A 峰值拉电流
  - 100mA 至 2A 峰值灌电流
  - 通过强下拉能力减小 dV/dt
- 集成栅极驱动器电源
  - 高侧倍增电荷泵可实现 100% PWM 占空比控制
  - 低侧线性稳压器
- 集成 LM5008A 降压稳压器
  - 6V 至 95V 工作电压范围
  - 2.5V 至 75V、350mA 输出能力
- 集成三个电流分流放大器
  - 可调增益（5、10、20、40 V/V）
  - 双向或单向支持
- 6x、3x、1x 和独立 PWM 模式
  - 支持 120° 有传感器运行
- 提供 SPI 或硬件接口
- 低功耗睡眠模式（V_{VM} = 48V 时为 20µA）
- 集成式保护 特性
  - VM 欠压锁定 (UVLO)
  - 栅极驱动电源欠压 (GDUV)
  - MOSFET V_{DS} 过流保护 (OCP)
  - MOSFET 击穿保护
  - 栅极驱动器故障 (GDF)
  - 热警告和热关断 (OTW/OTSD)
  - 故障状态指示器 (nFAULT)

2 应用

- 三相无刷直流 (BLDC) 电机模块
- 风扇、风机和泵
- 电动自行车、电动踏板车和电动汽车
- 电动和园艺工具、割草机
- 无人机、机器人和遥控玩具
- 工厂自动化和纺织机

3 说明

DRV835x 系列器件均为高度集成的栅极驱动器，适用于三相无刷直流 (BLDC) 电机 应用标准。这些 应用 包括 BLDC 电机的场定向控制 (FOC)、正弦电流控制和梯形电流控制。该器件型号提供了可选的集成式分流放大器以支持不同的电机控制方案，还提供了降压稳压器，以为栅极驱动器或外部控制器供电。

DRV835x 通过采用智能栅极驱动 (SGD) 架构减少了 MOSFET 压摆率控制和保护电路通常所需要的外部组件数量。SGD 架构还可优化死区时间以防止击穿问题，在通过 MOSFET 压摆率控制技术降低电磁干扰 (EMI) 方面带来了灵活性，并可通过 V_{GS} 监控器防止栅极短路问题。强大的栅极下拉电路有助于防止不必要的 dV/dt 寄生栅极开启事件。

该系列器件支持各种 PWM 控制模式（6x、3x、1x 和独立模式），可简化与外部控制器的连接。这些模式可减少电机驱动器 PWM 控制信号所需的控制器输出数量。该系列器件还包括 1x PWM 模式，因此可通过内部阻塞换向表轻松对 BLDC 电机进行传感器式梯形控制。

器件信息(1)

器件型号	封装	封装尺寸（标称值）
DRV8350	WQFN (32)	5.00mm × 5.00mm
DRV8350R	VQFN (48)	7.00mm × 7.00mm
DRV8353	WQFN (40)	6.00mm × 6.00mm
DRV8353R	VQFN (48)	7.00mm × 7.00mm

(1) 如需了解所有可用封装，请参阅数据表末尾的可订购产品附录。

简化原理图

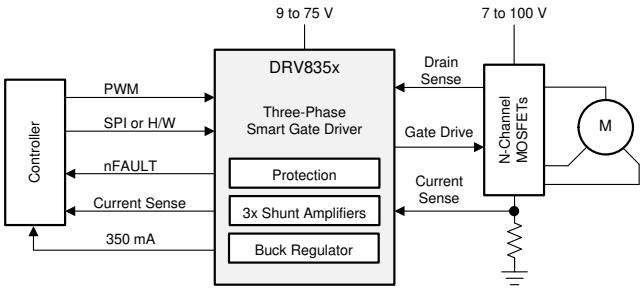

本文档旨在为方便起见，提供有关 TI 产品中文版本的信息，以确认产品的概要。 有关适用的官方英文版本的最新信息，请访问 www.ti.com，其内容始终优先。 TI 不保证翻译的准确性和有效性。 在实际设计之前，请务必参考最新版本的英文版本。

目录

1 特性 ... 1
2 应用 ... 1
3 说明 ... 1
4 修订历史记录 ... 2
5 **Device Comparison Table** ... 3
6 **Pin Configuration and Functions** ... 3
7 **Specifications** ... 10
7.1 Absolute Maximum Ratings ... 10
7.2 ESD Ratings ... 11
7.3 Recommended Operating Conditions ... 11
7.4 Thermal Information ... 11
7.5 Electrical Characteristics ... 12
7.6 SPI Timing Requirements ... 18
7.7 Typical Characteristics ... 19
8 **Detailed Description** ... 21
8.1 Overview ... 21
8.2 Functional Block Diagram ... 22
8.3 Feature Description ... 30
8.4 Device Functional Modes ... 53
8.5 Programming ... 54
8.6 Register Maps ... 56
9 **Application and Implementation** ... 65
9.1 Application Information ... 65
9.2 Typical Application ... 65
10 **Power Supply Recommendations** ... 77
10.1 Bulk Capacitance Sizing ... 77
11 **Layout** ... 78
11.1 Layout Guidelines ... 78
11.2 Layout Example ... 79
12 器件和文档支持 ... 80
12.1 器件支持 ... 80
12.2 文档支持 ... 80
12.3 相关链接 ... 81
12.4 接收文档更新通知 ... 81
12.5 社区资源 ... 81
12.6 商标 ... 81
12.7 静电放电警告 ... 81
12.8 Glossary ... 81
13 机械、封装和可订购信息 ... 81

4 修订历史记录

注：之前版本的页码可能与当前版本有所不同。

Changes from Original (August 2018) to Revision A — **Page**

- 已更改 将文档状态更改为生产数据 ... 1
- 已删除 从 DRV8350 和 DRV8353 器件中删除了仅供预览的标注 ... 1

Copyright © 2018–2019, Texas Instruments Incorporated

5 Device Comparison Table

DEVICE	VARIANT	SHUNT AMPLIFIERS	BUCK REGULATOR	INTERFACE
DRV8350	DRV8350H	0	None	Hardware (H)
	DRV8350S			SPI (S)
DRV8350R	DRV8350RH		350 mA (R)	Hardware (H)
	DRV8350RS			SPI (S)
DRV8353	DRV8353H	3	None	Hardware (H)
	DRV8353S			SPI (S)
DRV8353R	DRV8353RH		350 mA (R)	Hardware (H)
	DRV8353RS			SPI (S)

6 Pin Configuration and Functions

DRV8350H RTV Package
32-Pin WQFN With Exposed Thermal Pad
Top View

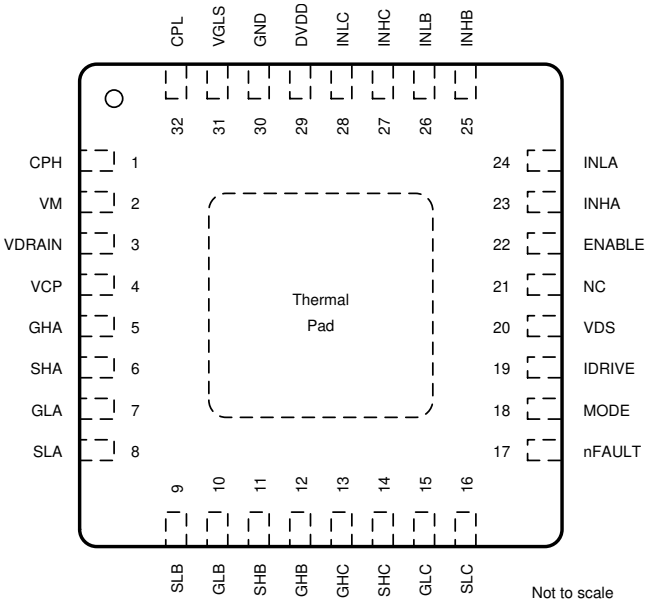

DRV8350S RTV Package
32-Pin WQFN With Exposed Thermal Pad
Top View

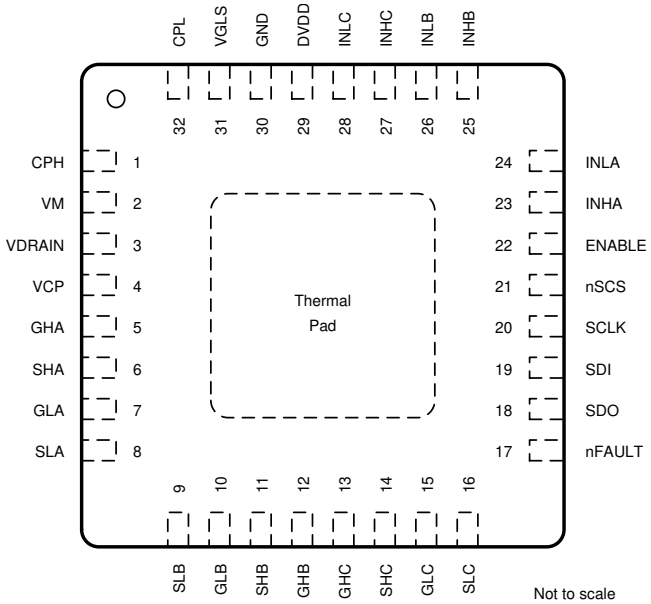

Pin Functions—32-Pin DRV8350 Devices

PIN			TYPE(1)	DESCRIPTION
NAME	NO.			
	DRV8350H	DRV8350S		
CPH	1	1	PWR	Charge pump switching node. Connect a X5R or X7R, 47-nF, VDRAIN-rated ceramic capacitor between the CPH and CPL pins.
CPL	32	32	PWR	Charge pump switching node. Connect a X5R or X7R, 47-nF, VDRAIN-rated ceramic capacitor between the CPH and CPL pins.
DVDD	29	29	PWR	5-V internal regulator output. Connect a X5R or X7R, 1-µF, 6.3-V ceramic capacitor between the DVDD and GND pins. This regulator can source up to 10 mA externally.
ENABLE	22	22	I	Gate driver enable. When this pin is logic low the device goes to a low power sleep mode. An 8 to 40-µs pulse can be used to reset fault conditions.
GHA	5	5	O	High-side gate driver output. Connect to the gate of the high-side power MOSFET.
GHB	12	12	O	High-side gate driver output. Connect to the gate of the high-side power MOSFET.
GHC	13	13	O	High-side gate driver output. Connect to the gate of the high-side power MOSFET.
GLA	7	7	O	Low-side gate driver output. Connect to the gate of the low-side power MOSFET.
GLB	10	10	O	Low-side gate driver output. Connect to the gate of the low-side power MOSFET.

(1) PWR = power, I = input, O = output, NC = no connection, OD = open-drain

Copyright © 2018–2019, Texas Instruments Incorporated

Pin Functions—32-Pin DRV8350 Devices (continued)

PIN			TYPE[1]	DESCRIPTION
NAME	NO.			
	DRV8350H	DRV8350S		
GLC	15	15	O	Low-side gate driver output. Connect to the gate of the low-side power MOSFET.
GND	30	30	PWR	Device primary ground. Connect to system ground.
IDRIVE	19	—	I	Gate drive output current setting. This pin is a 7 level input pin set by an external resistor.
INHA	23	23	I	High-side gate driver control input. This pin controls the output of the high-side gate driver.
INHB	25	25	I	High-side gate driver control input. This pin controls the output of the high-side gate driver.
INHC	27	27	I	High-side gate driver control input. This pin controls the output of the high-side gate driver.
INLA	24	24	I	Low-side gate driver control input. This pin controls the output of the low-side gate driver.
INLB	26	26	I	Low-side gate driver control input. This pin controls the output of the low-side gate driver.
INLC	28	28	I	Low-side gate driver control input. This pin controls the output of the low-side gate driver.
MODE	18	—	I	PWM input mode setting. This pin is a 4 level input pin set by an external resistor.
NC	21	—	NC	No internal connection. This pin can be left floating or connected to system ground.
nFAULT	17	17	OD	Fault indicator output. This pin is pulled logic low during a fault condition and requires an external pullup resistor.
nSCS	—	21	I	Serial chip select. A logic low on this pin enables serial interface communication.
SCLK	—	20	I	Serial clock input. Serial data is shifted out and captured on the corresponding rising and falling edge on this pin.
SDI	—	19	I	Serial data input. Data is captured on the falling edge of the SCLK pin.
SDO	—	18	OD	Serial data output. Data is shifted out on the rising edge of the SCLK pin. This pin requires an external pullup resistor.
SHA	6	6	I	High-side source sense input. Connect to the high-side power MOSFET source.
SHB	11	11	I	High-side source sense input. Connect to the high-side power MOSFET source.
SHC	14	14	I	High-side source sense input. Connect to the high-side power MOSFET source.
SLA	8	8	I	Low-side source sense input. Connect to the low-side power MOSFET source.
SLB	9	9	I	Low-side source sense input. Connect to the low-side power MOSFET source.
SLC	16	16	I	Low-side source sense input. Connect to the low-side power MOSFET source.
VCP	4	4	PWR	Charge pump output. Connect a X5R or X7R, 1-µF, 16-V ceramic capacitor between the VCP and VDRAIN pins.
VDRAIN	3	3	I	High-side MOSFET drain sense input and charge pump reference. Connect to the common point of the MOSFET drains.
VDS	20	—	I	VDS monitor trip point setting. This pin is a 7 level input pin set by an external resistor.
VGLS	31	31	PWR	11-V internal regulator output. Connect a X5R or X7R, 1-µF, 16-V ceramic capacitor between the VGLS and GND pins.
VM	2	2	PWR	Gate driver power supply input. Connect to either VDRAIN or separate gate driver supply voltage. Connect a X5R or X7R, 0.1-µF, VM-rated ceramic and greater then or equal to 10-uF local capacitance between the VM and GND pins.

DRV8350RH RGZ Package
48-Pin VQFN With Exposed Thermal Pad
Top View

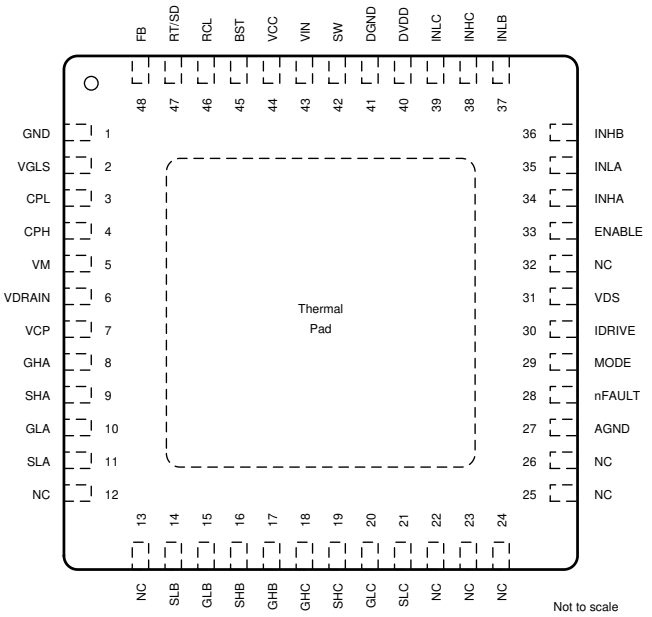

DRV8350RS RGZ Package
48-Pin VQFN With Exposed Thermal Pad
Top View

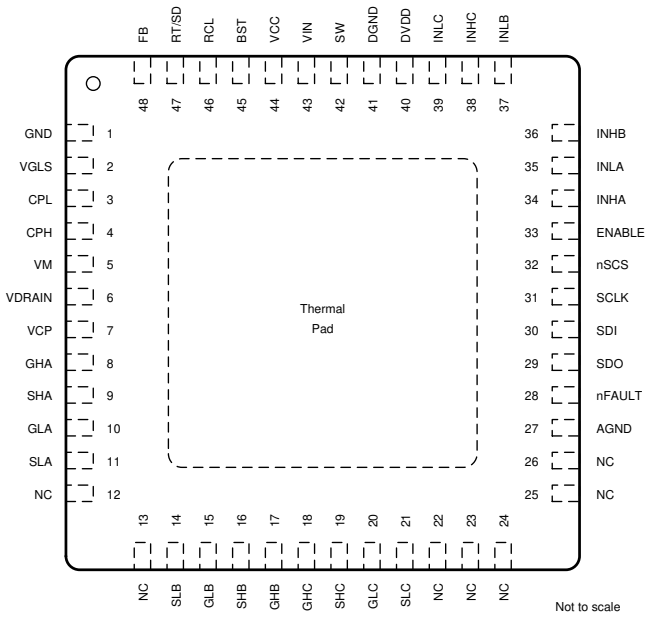

Copyright © 2018–2019, Texas Instruments Incorporated

Pin Functions—48-Pin DRV8350R Devices

PIN			TYPE(1)	DESCRIPTION
NAME	NO.			
	DRV8350RH	DRV8350RS		
AGND	27	27	PWR	Device analog ground. Connect to system ground.
BST	45	45	PWR	Buck regulator bootstrap input. Connect a X5R or X7R, 0.01-µF, 16-V, capacitor between the BST and SW pins.
CPH	4	4	PWR	Charge pump switching node. Connect a X5R or X7R, 47-nF, VDRAIN-rated ceramic capacitor between the CPH and CPL pins.
CPL	3	3	PWR	Charge pump switching node. Connect a X5R or X7R, 47-nF, VDRAIN-rated ceramic capacitor between the CPH and CPL pins.
DGND	41	41	PWR	Device digital ground. Connect to system ground.
DVDD	40	40	PWR	5-V internal regulator output. Connect a X5R or X7R, 1-µF, 6.3-V ceramic capacitor between the DVDD and DGND pins. This regulator can source up to 10 mA externally.
ENABLE	33	33	I	Gate driver enable. When this pin is logic low the device goes to a low power sleep mode. An 8 to 40-µs low pulse can be used to reset fault conditions.
FB	48	48	I	Buck feedback input. A resistor divider from the buck post inductor output to this pin sets the buck output voltage.
GHA	8	8	O	High-side gate driver output. Connect to the gate of the high-side power MOSFET.
GHB	17	17	O	High-side gate driver output. Connect to the gate of the high-side power MOSFET.
GHC	18	18	O	High-side gate driver output. Connect to the gate of the high-side power MOSFET.
GLA	10	10	O	Low-side gate driver output. Connect to the gate of the low-side power MOSFET.
GLB	15	15	O	Low-side gate driver output. Connect to the gate of the low-side power MOSFET.
GLC	20	20	O	Low-side gate driver output. Connect to the gate of the low-side power MOSFET.
GND	1	1	PWR	Device primary ground. Connect to system ground.
IDRIVE	30	—	I	Gate drive output current setting. This pin is a 7 level input pin set by an external resistor.
INHA	34	34	I	High-side gate driver control input. This pin controls the output of the high-side gate driver.
INHB	36	36	I	High-side gate driver control input. This pin controls the output of the high-side gate driver.
INHC	38	38	I	High-side gate driver control input. This pin controls the output of the high-side gate driver.
INLA	35	35	I	Low-side gate driver control input. This pin controls the output of the low-side gate driver.
INLB	37	37	I	Low-side gate driver control input. This pin controls the output of the low-side gate driver.
INLC	39	39	I	Low-side gate driver control input. This pin controls the output of the low-side gate driver.
MODE	29	—	I	PWM input mode setting. This pin is a 4 level input pin set by an external resistor.
NC	12	12	NC	No internal connection. This pin can be left floating or connected to system ground.
NC	13	13	NC	No internal connection. This pin can be left floating or connected to system ground.
NC	22	22	NC	No internal connection. This pin can be left floating or connected to system ground.
NC	23	23	NC	No internal connection. This pin can be left floating or connected to system ground.
NC	24	24	NC	No internal connection. This pin can be left floating or connected to system ground.
NC	25	25	NC	No internal connection. This pin can be left floating or connected to system ground.
NC	26	26	NC	No internal connection. This pin can be left floating or connected to system ground.
NC	32	—	NC	No internal connection. This pin can be left floating or connected to system ground.
nFAULT	28	28	OD	Fault indicator output. This pin is pulled logic low during a fault condition and requires an external pullup resistor.
nSCS	—	32	I	Serial chip select. A logic low on this pin enables serial interface communication.
RCL	46	46	I	Current limit off time set input. Connect a resistor between RCL and GND.
RT/SD	47	47	I	On time set and remote shutdown input. Connect a resistor between RT/SD and VIN.
SCLK	—	31	I	Serial clock input. Serial data is shifted out and captured on the corresponding rising and falling edge on this pin.
SDI	—	30	I	Serial data input. Data is captured on the falling edge of the SCLK pin.
SDO	—	29	OD	Serial data output. Data is shifted out on the rising edge of the SCLK pin. This pin requires an external pullup resistor.
SHA	9	9	I	High-side source sense input. Connect to the high-side power MOSFET source.
SHB	16	16	I	High-side source sense input. Connect to the high-side power MOSFET source.
SHC	19	19	I	High-side source sense input. Connect to the high-side power MOSFET source.
SLA	11	11	I	Low-side source sense input. Connect to the low-side power MOSFET source.
SLB	14	14	I	Low-side source sense input. Connect to the low-side power MOSFET source.
SLC	21	21	I	Low-side source sense input. Connect to the low-side power MOSFET source.
SW	42	42	O	Buck switch node. Connect this pin to an inductor, diode, and the CB bootstrap capacitor.
VCC	44	44	PWR	7-V internal regulator output. Gate supply for buck switch. Connect a X5R or X7R, 0.47-µF, 16-V ceramic capacitor between the VCC and GND pins.
VCP	7	7	PWR	Charge pump output. Connect a X5R or X7R, 1-µF, 16-V ceramic capacitor between the VCP and VDRAIN pins.
VDRAIN	6	6	I	High-side MOSFET drain sense input and charge pump reference. Connect to the common point of the MOSFET drains.
VDS	31	—	I	VDS monitor trip point setting. This pin is a 7 level input pin set by an external resistor.
VGLS	2	2	PWR	11-V internal regulator output. Connect a X5R or X7R, 1-µF, 16-V ceramic capacitor between the VGLS and GND pins.

(1) PWR = power, I = input, O = output, NC = no connection, OD = open-drain

Copyright © 2018–2019, Texas Instruments Incorporated

Pin Functions—48-Pin DRV8350R Devices (continued)

PIN			TYPE(1)	DESCRIPTION
NAME	NO.			
	DRV8350RH	DRV8350RS		
VIN	43	43	PWR	Buck regulator power supply input. Place an X5R or X7R, VM-rated ceramic capacitor between the VIN and GND pins.
VM	5	5	PWR	Gate driver power supply input. Connect to either VDRAIN or separate gate driver supply voltage. Connect a X5R or X7R, 0.1-µF, VM-rated ceramic and greater then or equal to 10-uF local capacitance between the VM and GND pins.

DRV8353H RTA Package
40-Pin WQFN With Exposed Thermal Pad
Top View

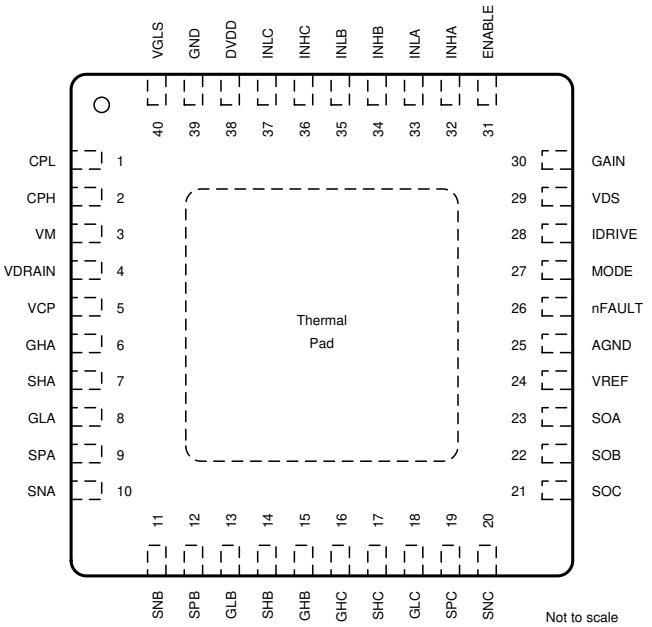

DRV8353S RTA Package
40-Pin WQFN With Exposed Thermal Pad
Top View

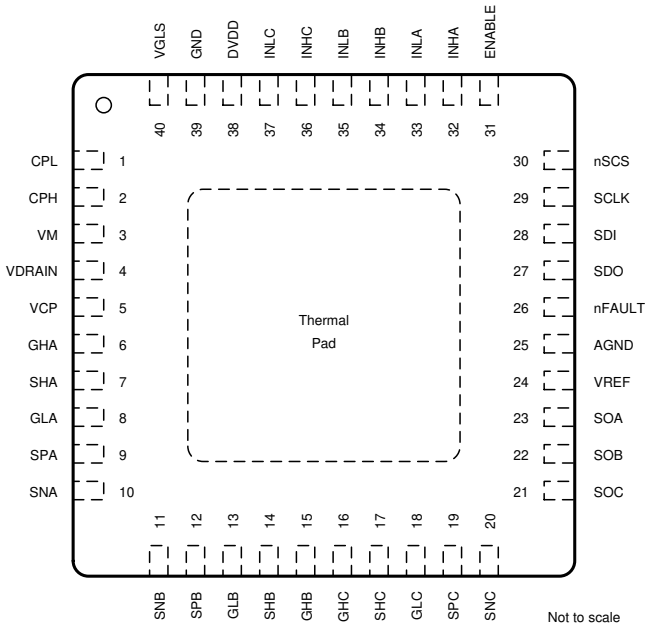

Pin Functions—40-Pin DRV8353 Devices

PIN			TYPE(1)	DESCRIPTION
NAME	NO.			
	DRV8353H	DRV8353S		
AGND	25	25	PWR	Device analog ground. Connect to system ground.
CPH	2	2	PWR	Charge pump switching node. Connect a X5R or X7R, 47-nF, VDRAIN-rated ceramic capacitor between the CPH and CPL pins.
CPL	1	1	PWR	Charge pump switching node. Connect a X5R or X7R, 47-nF, VDRAIN-rated ceramic capacitor between the CPH and CPL pins.
DVDD	38	38	PWR	5-V internal regulator output. Connect a X5R or X7R, 1-µF, 6.3-V ceramic capacitor between the DVDD and GND pins. This regulator can source up to 10 mA externally.
ENABLE	31	31	I	Gate driver enable. When this pin is logic low the device goes to a low power sleep mode. An 8 to 40-µs low pulse can be used to reset fault conditions.
GAIN	30	—	I	Amplifier gain setting. The pin is a 4 level input pin set by an external resistor.
GND	39	39	PWR	Device power ground. Connect to system ground.
GHA	6	6	O	High-side gate driver output. Connect to the gate of the high-side power MOSFET.
GHB	15	15	O	High-side gate driver output. Connect to the gate of the high-side power MOSFET.
GHC	16	16	O	High-side gate driver output. Connect to the gate of the high-side power MOSFET.
GLA	8	8	O	Low-side gate driver output. Connect to the gate of the low-side power MOSFET.
GLB	13	13	O	Low-side gate driver output. Connect to the gate of the low-side power MOSFET.
GLC	18	18	O	Low-side gate driver output. Connect to the gate of the low-side power MOSFET.
IDRIVE	28	—	I	Gate drive output current setting. This pin is a 7 level input pin set by an external resistor.
INHA	32	32	I	High-side gate driver control input. This pin controls the output of the high-side gate driver.
INHB	34	34	I	High-side gate driver control input. This pin controls the output of the high-side gate driver.
INHC	36	36	I	High-side gate driver control input. This pin controls the output of the high-side gate driver.

(1) PWR = power, I = input, O = output, NC = no connection, OD = open-drain

Copyright © 2018–2019, Texas Instruments Incorporated

Pin Functions—40-Pin DRV8353 Devices (continued)

PIN			TYPE[1]	DESCRIPTION
NAME	NO.			
	DRV8353H	DRV8353S		
INLA	33	33	I	Low-side gate driver control input. This pin controls the output of the low-side gate driver.
INLB	35	35	I	Low-side gate driver control input. This pin controls the output of the low-side gate driver.
INLC	37	37	I	Low-side gate driver control input. This pin controls the output of the low-side gate driver.
MODE	27	—	I	PWM input mode setting. This pin is a 4 level input pin set by an external resistor.
nFAULT	26	26	OD	Fault indicator output. This pin is pulled logic low during a fault condition and requires an external pullup resistor.
nSCS	—	30	I	Serial chip select. A logic low on this pin enables serial interface communication.
SCLK	—	29	I	Serial clock input. Serial data is shifted out and captured on the corresponding rising and falling edge on this pin.
SDI	—	28	I	Serial data input. Data is captured on the falling edge of the SCLK pin.
SDO	—	27	OD	Serial data output. Data is shifted out on the rising edge of the SCLK pin. This pin requires an external pullup resistor.
SHA	7	7	I	High-side source sense input. Connect to the high-side power MOSFET source.
SHB	14	14	I	High-side source sense input. Connect to the high-side power MOSFET source.
SHC	17	17	I	High-side source sense input. Connect to the high-side power MOSFET source.
SNA	10	10	I	Shunt amplifier input. Connect to the low-side of the current shunt resistor.
SNB	11	11	I	Shunt amplifier input. Connect to the low-side of the current shunt resistor.
SNC	20	20	I	Shunt amplifier input. Connect to the low-side of the current shunt resistor.
SOA	23	23	O	Shunt amplifier output.
SOB	22	22	O	Shunt amplifier output.
SOC	21	21	O	Shunt amplifier output.
SPA	9	9	I	Low-side source sense and shunt amplifier input. Connect to the low-side power MOSFET source and high-side of the current shunt resistor.
SPB	12	12	I	Low-side source sense and shunt amplifier input. Connect to the low-side power MOSFET source and high-side of the current shunt resistor.
SPC	19	19	I	Low-side source sense and shunt amplifier input. Connect to the low-side power MOSFET source and high-side of the current shunt resistor.
VCP	5	5	PWR	Charge pump output. Connect a X5R or X7R, 1-µF, 16-V ceramic capacitor between the VCP and VDRAIN pins.
VDRAIN	4	4	I	High-side MOSFET drain sense input and charge pump reference. Connect to the common point of the MOSFET drains.
VDS	29	—	I	VDS monitor trip point setting. This pin is a 7 level input pin set by an external resistor.
VGLS	40	40	PWR	11-V internal regulator output. Connect a X5R or X7R, 1-µF, 16-V ceramic capacitor between the VGLS and GND pins.
VM	3	3	PWR	Gate driver power supply input. Connect to either VDRAIN or separate gate driver supply voltage. Connect a X5R or X7R, 0.1-µF, VM-rated ceramic and greater then or equal to 10-uF local capacitance between the VM and GND pins.
VREF	24	24	PWR	Shunt amplifier power supply input and reference. Connect a X5R or X7R, 0.1-µF, 6.3-V ceramic capacitor between the VREF and AGND pins.

Copyright © 2018–2019, Texas Instruments Incorporated

DRV8353RH RGZ Package
48-Pin VQFN With Exposed Thermal Pad
Top View

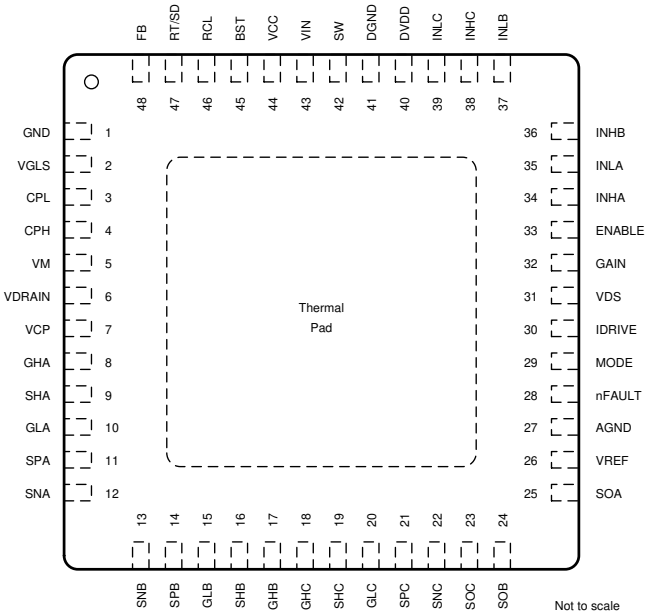

DRV8353RS RGZ Package
48-Pin VQFN With Exposed Thermal Pad
Top View

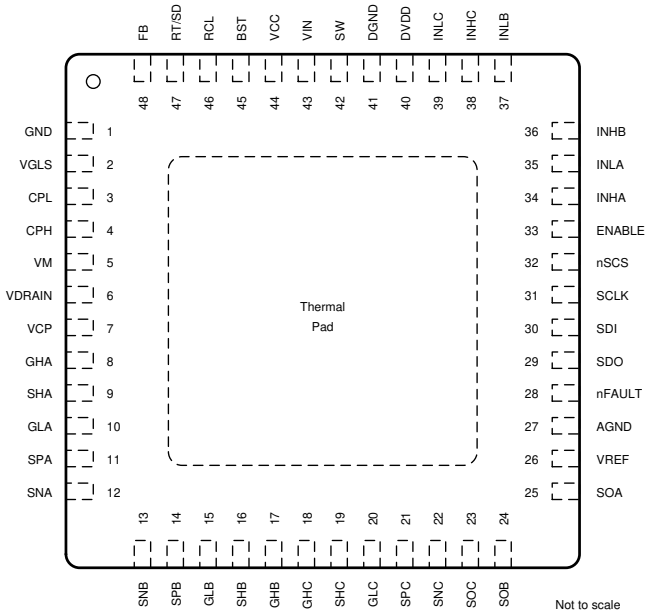

Pin Functions—48-Pin DRV8353R Devices

PIN			TYPE(1)	DESCRIPTION
NAME	NO.			
	DRV8353RH	DRV8353RS		
AGND	27	27	PWR	Device analog ground. Connect to system ground.
BST	45	45	PWR	Buck regulator bootstrap input. Connect a X5R or X7R, 0.01-µF, 16-V, capacitor between the BST and SW pins.
CPH	4	4	PWR	Charge pump switching node. Connect a X5R or X7R, 47-nF, VDRAIN-rated ceramic capacitor between the CPH and CPL pins.
CPL	3	3	PWR	Charge pump switching node. Connect a X5R or X7R, 47-nF, VDRAIN-rated ceramic capacitor between the CPH and CPL pins.
DGND	41	41	PWR	Device ground. Connect to system ground.
DVDD	40	40	PWR	5-V internal regulator output. Connect a X5R or X7R, 1-µF, 6.3-V ceramic capacitor between the DVDD and DGND pins. This regulator can source up to 10 mA externally.
ENABLE	33	33	I	Gate driver enable. When this pin is logic low the device goes to a low power sleep mode. An 8 to 40-µs low pulse can be used to reset fault conditions.
FB	48	48	I	Buck feedback input. A resistor divider from the buck post inductor output to this pin sets the buck output voltage.
GAIN	32	—	I	Amplifier gain setting. The pin is a 4 level input pin set by an external resistor.
GND	1	1	PWR	Device power ground. Connect to system ground.
GHA	8	8	O	High-side gate driver output. Connect to the gate of the high-side power MOSFET.
GHB	17	17	O	High-side gate driver output. Connect to the gate of the high-side power MOSFET.
GHC	18	18	O	High-side gate driver output. Connect to the gate of the high-side power MOSFET.
GLA	10	10	O	Low-side gate driver output. Connect to the gate of the low-side power MOSFET.
GLB	15	15	O	Low-side gate driver output. Connect to the gate of the low-side power MOSFET.
GLC	20	20	O	Low-side gate driver output. Connect to the gate of the low-side power MOSFET.
IDRIVE	30	—	I	Gate drive output current setting. This pin is a 7 level input pin set by an external resistor.
INHA	34	34	I	High-side gate driver control input. This pin controls the output of the high-side gate driver.
INHB	36	36	I	High-side gate driver control input. This pin controls the output of the high-side gate driver.
INHC	38	38	I	High-side gate driver control input. This pin controls the output of the high-side gate driver.
INLA	35	35	I	Low-side gate driver control input. This pin controls the output of the low-side gate driver.
INLB	37	37	I	Low-side gate driver control input. This pin controls the output of the low-side gate driver.
INLC	39	39	I	Low-side gate driver control input. This pin controls the output of the low-side gate driver.
MODE	29	—	I	PWM input mode setting. This pin is a 4 level input pin set by an external resistor.
nFAULT	28	28	OD	Fault indicator output. This pin is pulled logic low during a fault condition and requires an external pullup resistor.

(1) PWR = power, I = input, O = output, NC = no connection, OD = open-drain

Copyright © 2018–2019, Texas Instruments Incorporated

Pin Functions—48-Pin DRV8353R Devices (continued)

PIN			TYPE[1]	DESCRIPTION
NAME	NO.			
	DRV8353RH	DRV8353RS		
nSCS	—	32	I	Serial chip select. A logic low on this pin enables serial interface communication.
RCL	46	46	I	Current limit off time set input. Connect a resistor between RCL and GND.
RT/SD	47	47	I	On time set and remote shutdown input. Connect a resistor between RT/SD and VIN.
SCLK	—	31	I	Serial clock input. Serial data is shifted out and captured on the corresponding rising and falling edge on this pin.
SDI	—	30	I	Serial data input. Data is captured on the falling edge of the SCLK pin.
SDO	—	29	OD	Serial data output. Data is shifted out on the rising edge of the SCLK pin. This pin requires an external pullup resistor.
SHA	9	9	I	High-side source sense input. Connect to the high-side power MOSFET source.
SHB	16	16	I	High-side source sense input. Connect to the high-side power MOSFET source.
SHC	19	19	I	High-side source sense input. Connect to the high-side power MOSFET source.
SNA	12	12	I	Shunt amplifier input. Connect to the low-side of the current shunt resistor.
SNB	13	13	I	Shunt amplifier input. Connect to the low-side of the current shunt resistor.
SNC	22	22	I	Shunt amplifier input. Connect to the low-side of the current shunt resistor.
SOA	25	25	O	Shunt amplifier output.
SOB	24	24	O	Shunt amplifier output.
SOC	23	23	O	Shunt amplifier output.
SPA	11	11	I	Low-side source sense and shunt amplifier input. Connect to the low-side power MOSFET source and high-side of the current shunt resistor.
SPB	14	14	I	Low-side source sense and shunt amplifier input. Connect to the low-side power MOSFET source and high-side of the current shunt resistor.
SPC	21	21	I	Low-side source sense and shunt amplifier input. Connect to the low-side power MOSFET source and high-side of the current shunt resistor.
SW	42	42	O	Buck switch node. Connect this pin to an inductor, diode, and the CB bootstrap capacitor.
VCC	44	44	PWR	7-V internal regulator output. Gate supply for buck switch. Connect a X5R or X7R, 0.47-µF, 16-V ceramic capacitor between the VCC and GND pins.
VCP	7	7	PWR	Charge pump output. Connect a X5R or X7R, 1-µF, 16-V ceramic capacitor between the VCP and VDRAIN pins.
VDRAIN	6	6	I	High-side MOSFET drain sense input and charge pump reference. Connect to the common point of the MOSFET drains.
VDS	31	—	I	VDS monitor trip point setting. This pin is a 7 level input pin set by an external resistor.
VGLS	2	2	PWR	11-V internal regulator output. Connect a X5R or X7R, 1-µF, 16-V ceramic capacitor between the VGLS and GND pins.
VIN	43	43	PWR	Buck regulator power supply input. Place an X5R or X7R, VM-rated ceramic capacitor between the VIN and BGND pins.
VM	5	5	PWR	Gate driver power supply input. Connect to either VDRAIN or separate gate driver supply voltage. Connect a X5R or X7R, 0.1-µF, VM-rated ceramic and greater then or equal to 10-uF local capacitance between the VM and GND pins.
VREF	26	26	PWR	Shunt amplifier power supply input and reference. Connect a X5R or X7R, 0.1-µF, 6.3-V ceramic capacitor between the VREF and AGND pins.

Copyright © 2018–2019, Texas Instruments Incorporated

7 Specifications

7.1 Absolute Maximum Ratings

at T_A = –40°C to +125°C (unless otherwise noted)[1]

	MIN	MAX	UNIT
GATE DRIVER			
Power supply pin voltage (VM)	–0.3	80	V
Voltage differential between ground pins (AGND, BGND, DGND, PGND)	–0.3	0.3	V
MOSFET drain sense pin voltage (VDRAIN)	–0.3	102	V
MOSFET drain sense pin voltage slew rate (VDRAIN)	0	2	V/µs
Charge pump pin voltage (CPH, VCP)	–0.3	V_{VDRAIN} + 16	V
Charge-pump negative-switching pin voltage (CPL)	–0.3	V_{VDRAIN}	V
Low-side gate drive regulator pin voltage (VGLS)	–0.3	18	V
Internal logic regulator pin voltage (DVDD)	–0.3	5.75	V
Digital pin voltage (ENABLE, GAIN, IDRIVE, INHx, INLx, MODE, nFAULT, nSCS, SCLK, SDI, SDO, VDS)	–0.3	5.75	V
Continuous high-side gate drive pin voltage (GHx)	–5[2]	V_{VCP} + 0.3	V
Transient 200-ns high-side gate drive pin voltage (GHx)	–10	V_{VCP} + 0.3	V
High-side gate drive pin voltage with respect to SHx (GHx)	–0.3	16	V
Continuous high-side source sense pin voltage (SHx)	–5[2]	102	V
Continuous high-side source sense pin voltage (SHx)	–5[2]	V_{VDRAIN} + 5	V
Transient 200-ns high-side source sense pin voltage (SHx)	–10	V_{VDRAIN} + 10	V
Continuous low-side gate drive pin voltage (GLx)	–1.0	V_{VGLS} + 0.3	V
Transient 200-ns low-side gate drive pin voltage (GLx)	–5.0	V_{VGLS} + 0.3	V
Gate drive pin source current (GHx, GLx)	Internally limited	Internally limited	A
Gate drive pin sink current (GHx, GLx)	Internally limited	Internally limited	A
Continuous low-side source sense pin voltage (SLx)	–1	1	V
Transient 200-ns low-side source sense pin voltage (SLx)	–5	5	V
Continuous shunt amplifier input pin voltage (SNx, SPx)	–1	1	V
Transient 200-ns shunt amplifier input pin voltage (SNx, SPx)	–5	5	V
Reference input pin voltage (VREF)	–0.3	5.75	V
Shunt amplifier output pin voltage (SOx)	–0.3	V_{VREF} + 0.3	V
BUCK REGULATOR			
Power supply pin voltage (VIN)	–0.3	100	V
Bootstrap pin voltage (BST)	–0.3	114	V
Bootstrap pin voltage with respect to SW (BST)	–0.3	14	V
Bootstrap pin voltage with respect to VCC (BST)	–0.3	100	V
Switching node pin voltage (SW)	–1	V_{VIN}	V
Internal regulator pin voltage (VCC)	–0.3	14	V
Input pin voltage (FB, RCL, RT/SD)	–0.3	7	V
DRV835x			
Ambient temperature, T_A	–40	125	°C
Junction temperature, T_J	–40	150	°C
Storage temperature, T_{stg}	–65	150	°C

(1) Stresses beyond those listed under *Absolute Maximum Ratings* may cause permanent damage to the device. These are stress ratings only, which do not imply functional operation of the device at these or any other conditions beyond those indicated under *Recommended Operating Conditions*. Exposure to absolute-maximum-rated conditions for extended periods may affect device reliability.
(2) VDRAIN pin voltage with respect to high-side gate pin (GHx) and phase node pin voltage (SHx) should be limited to 102 V maximum. This will limit the GHx and SHx pin negative voltage capability when VDRAIN is greater than 92 V.

Copyright © 2018–2019, Texas Instruments Incorporated

7.2 ESD Ratings

			VALUE	UNIT
$V_{(ESD)}$	Electrostatic discharge	Human-body model (HBM), per ANSI/ESDA/JEDEC JS-001 (1)	±1000	V
		Charged-device model (CDM), per JEDEC specification JESD22-C101 (2)	±500	

(1) JEDEC document JEP155 states that 500-V HBM allows safe manufacturing with a standard ESD control process. Pins listed as ±2000 V may actually have higher performance.
(2) JEDEC document JEP157 states that 250-V CDM allows safe manufacturing with a standard ESD control process. Pins listed as ±500 V may actually have higher performance.

7.3 Recommended Operating Conditions

at T_A = –40°C to +125°C (unless otherwise noted)

		MIN	MAX	UNIT
GATE DRIVER				
V_{VM}	Gate driver power supply voltage (VM)	9	75	V
V_{VDRAIN}	Charge pump reference and drain voltage sense (VDRAIN)	7	100	V
V_I	Input voltage (ENABLE, GAIN, IDRIVE, INHx, INLx, MODE, nSCS, SCLK, SDI, VDS)	0	5.5	V
f_{PWM}	Applied PWM signal (INHx, INLx)	0	200 (1)	kHz
t_{SH}	Switch-node slew rate range (SHx)	0	2	V/ns
I_{GATE_HS}	High-side average gate-drive current (GHx)	0	25 (1)	mA
I_{GATE_LS}	Low-side average gate-drive current (GLx)	0	25 (1)	mA
I_{DVDD}	External load current (DVDD)	0	10 (1)	mA
V_{VREF}	Reference voltage input (VREF)	3	5.5	V
I_{SO}	Shunt amplifier output current (SOx)	0	5	mA
V_{OD}	Open drain pullup voltage (nFAULT, SDO)	0	5.5	V
I_{OD}	Open drain output current (nFAULT, SDO)	0	5	mA
BUCK REGULATOR				
V_{VIN}	Power supply voltage (VIN)	6	95	V
DRV835x				
T_A	Operating ambient temperature	–40	125	°C
T_J	Operating junction temperature	–40	150	°C

(1) Power dissipation and thermal limits must be observed.

7.4 Thermal Information

THERMAL METRIC (1)		DRV8350	DRV8353	DRV835xR	UNIT
		RTV (WQFN)	RTA (WQFN)	RGZ (VQFN)	
		32 PINS	40 PINS	48 PINS	
$R_{\theta JA}$	Junction-to-ambient thermal resistance	29.2	26.1	24.7	°C/W
$R_{\theta JC(top)}$	Junction-to-case (top) thermal resistance	15.2	13.1	12.0	°C/W
$R_{\theta JB}$	Junction-to-board thermal resistance	9.2	8.4	7.1	°C/W
ψ_{JT}	Junction-to-top characterization parameter	0.1	0.1	0.1	°C/W
ψ_{JB}	Junction-to-board characterization parameter	9.2	8.4	7.1	°C/W
$R_{\theta JC(bot)}$	Junction-to-case (bottom) thermal resistance	1.2	1.1	0.8	°C/W

(1) For more information about traditional and new thermal metrics, see the Semiconductor and IC Package Thermal Metrics application report.

Copyright © 2018–2019, Texas Instruments Incorporated

7.5 Electrical Characteristics

at T_A = –40°C to +125°C, V_{VM} = 9 to 75 V, V_{VDRAIN} = 9 to 100 V, V_{VIN} = 48 V (unless otherwise noted)

PARAMETER		TEST CONDITIONS	MIN	TYP	MAX	UNIT
POWER SUPPLIES (DVDD, VCP, VGLS, VM)						
I_{VM}	VM operating supply current	V_{VM} = V_{VDRAIN} = 48 V, ENABLE = 3.3 V, INHx/INLx = 0 V		8.5	13	mA
I_{VDRAIN}	VDRAIN operating supply current	V_{VM} = V_{VDRAIN} = 48 V, ENABLE = 3.3 V, INHx/INLx = 0 V		1.9	4	mA
I_{SLEEP}	Sleep mode supply current	ENABLE = 0 V, V_{VM} = V_{VDRAIN} = 48 V, T_A = 25°C		20	40	µA
		ENABLE = 0 V, V_{VM} = V_{VDRAIN} = 48 V, T_A = 125°C			100	
t_{RST}	Reset pulse time	ENABLE = 0 V period to reset faults	5		40	µs
t_{WAKE}	Turnon time	V_{VM} > V_{UVLO}, ENABLE = 3.3 V to outputs ready			1	ms
t_{SLEEP}	Turnoff time	ENABLE = 0 V to device sleep mode			1	ms
V_{DVDD}	DVDD regulator voltage	I_{DVDD} = 0 to 10 mA	4.75	5	5.25	V
V_{VCP}	VCP operating voltage with respect to VDRAIN	V_{VM} = 15 V, I_{VCP} = 0 to 25 mA	9	10.5	12	V
		V_{VM} = 12 V, I_{VCP} = 0 to 20 mA	7.5	10	11.5	
		V_{VM} = 10 V, I_{VCP} = 0 to 15 mA	6	8	9.5	
		V_{VM} = 9 V, I_{VCP} = 0 to 10 mA	5.5	7.5	8.5	
V_{VGLS}	VGLS operating voltage with respect to GND	V_{VM} = 15 V, I_{VGLS} = 0 to 25 mA	13	14.5	16	V
		V_{VM} = 12 V, I_{VGLS} = 0 to 20 mA	10	11.5	12.5	
		V_{VM} = 10 V, I_{VGLS} = 0 to 15 mA	8	9.5	10.5	
		V_{VM} = 9 V, I_{VGLS} = 0 to 10 mA	7	8.5	9.5	
LOGIC-LEVEL INPUTS (ENABLE, INHx, INLx, nSCS, SCLK, SDI)						
V_{IL}	Input logic low voltage		0		0.8	V
V_{IH}	Input logic high voltage		1.5		5.5	V
V_{HYS}	Input logic hysteresis			100		mV
I_{IL}	Input logic low current	V_{VIN} = 0 V	–5		5	µA
I_{IH}	Input logic high current	V_{VIN} = 5 V		50	70	µA
R_{PD}	Pulldown resistance	To GND		100		kΩ
t_{PD}	Propagation delay	INHx/INLx transition to GHx/GLx transition		200		ns
FOUR-LEVEL H/W INPUTS (GAIN, MODE)						
V_{I1}	Input mode 1 voltage	Tied to GND		0		V
V_{I2}	Input mode 2 voltage	47 kΩ ± 5% to tied GND		1.9		V
V_{I3}	Input mode 3 voltage	Hi-Z		3.1		V
V_{I4}	Input mode 4 voltage	Tied to DVDD		5		V
R_{PU}	Pullup resistance	Internal pullup to DVDD		50		kΩ
R_{PD}	Pulldown resistance	Internal pulldown to GND		84		kΩ
SEVEN-LEVEL H/W INPUTS (IDRIVE, VDS)						
V_{I1}	Input mode 1 voltage	Tied to GND		0		V
V_{I2}	Input mode 2 voltage	18 kΩ ± 5% tied to GND		0.8		V
V_{I3}	Input mode 3 voltage	75 kΩ ± 5% tied to GND		1.7		V
V_{I4}	Input mode 4 voltage	Hi-Z		2.5		V
V_{I5}	Input mode 5 voltage	75 kΩ ± 5% tied to DVDD		3.3		V
V_{I6}	Input mode 6 voltage	18 kΩ ± 5% tied to DVDD		4.2		V
V_{I7}	Input mode 7 voltage	Tied to DVDD		5		V
R_{PU}	Pullup resistance	Internal pullup to DVDD		73		kΩ
R_{PD}	Pulldown resistance	Internal pulldown to GND		73		kΩ
OPEN DRAIN OUTPUTS (nFAULT, SDO)						
V_{OL}	Output logic low voltage	I_O = 5 mA			0.125	V
I_{OZ}	Output high impedance leakage	V_O = 5 V	–2		2	µA

Copyright © 2018–2019, Texas Instruments Incorporated

Electrical Characteristics (continued)

at T_A = –40°C to +125°C, V_{VM} = 9 to 75 V, V_{VDRAIN} = 9 to 100 V, V_{VIN} = 48 V (unless otherwise noted)

PARAMETER			TEST CONDITIONS	MIN	TYP	MAX	UNIT
GATE DRIVERS (GHx, GLx)							
V_{GSH}	High-side gate drive voltage with respect to SHx		V_{VM} = 15 V, I_{VCP} = 0 to 25 mA	9	10.5	12	V
			V_{VM} = 12 , I_{VCP} = 0 to 20 mA	7.5	10	11.5	
			V_{VM} = 10 V, I_{VCP} = 0 to 15 mA	6	8	9.5	
			V_{VM} = 9 V, I_{VCP} = 0 to 10 mA	5.5	7.5	8.5	
V_{GSL}	Low-side gate drive voltage with respect to PGND		V_{VM} = 15 V, I_{VGLS} = 0 to 25 mA	9.5	11	12.5	V
			V_{VM} = 12 V, I_{VGLS} = 0 to 20 mA	9	10.5	12	
			V_{VM} = 10 V, I_{VGLS} = 0 to 15 mA	7.5	9	10.5	
			V_{VM} = 9 V, I_{VGLS} = 0 to 10 mA	6.5	8	9.5	
t_{DEAD}	Gate drive dead time	SPI Device	DEAD_TIME = 00b		50		ns
			DEAD_TIME = 01b		100		
			DEAD_TIME = 10b		200		
			DEAD_TIME = 11b		400		
		H/W Device			100		
t_{DRIVE}	Peak current gate drive time	SPI Device	TDRIVE = 00b		500		ns
			TDRIVE = 01b		1000		
			TDRIVE = 10b		2000		
			TDRIVE = 11b		4000		
		H/W Device			4000		
I_{DRIVEP}	Peak source gate current	SPI Device	IDRIVEP_HS or IDRIVEP_LS = 0000b		50		mA
			IDRIVEP_HS or IDRIVEP_LS = 0001b		50		
			IDRIVEP_HS or IDRIVEP_LS = 0010b		100		
			IDRIVEP_HS or IDRIVEP_LS = 0011b		150		
			IDRIVEP_HS or IDRIVEP_LS = 0100b		300		
			IDRIVEP_HS or IDRIVEP_LS = 0101b		350		
			IDRIVEP_HS or IDRIVEP_LS = 0110b		400		
			IDRIVEP_HS or IDRIVEP_LS = 0111b		450		
			IDRIVEP_HS or IDRIVEP_LS = 1000b		550		
			IDRIVEP_HS or IDRIVEP_LS = 1001b		600		
			IDRIVEP_HS or IDRIVEP_LS = 1010b		650		
			IDRIVEP_HS or IDRIVEP_LS = 1011b		700		
			IDRIVEP_HS or IDRIVEP_LS = 1100b		850		
			IDRIVEP_HS or IDRIVEP_LS = 1101b		900		
			IDRIVEP_HS or IDRIVEP_LS = 1110b		950		
			IDRIVEP_HS or IDRIVEP_LS = 1111b		1000		
		H/W Device	IDRIVE = Tied to GND		50		
			IDRIVE = 18 kΩ ± 5% tied to GND		100		
			IDRIVE = 75 kΩ ± 5% tied to GND		150		
			IDRIVE = Hi-Z		300		
			IDRIVE = 75 kΩ ± 5% tied to DVDD		450		
			IDRIVE = 18 kΩ ± 5% tied to DVDD		700		
			IDRIVE = Tied to DVDD		1000		

Copyright © 2018–2019, Texas Instruments Incorporated

Electrical Characteristics (continued)

at T_A = –40°C to +125°C, V_{VM} = 9 to 75 V, V_{VDRAIN} = 9 to 100 V, V_{VIN} = 48 V (unless otherwise noted)

PARAMETER			TEST CONDITIONS	MIN	TYP	MAX	UNIT
I_{DRIVEN}	Peak sink gate current	SPI Device	IDRIVEN_HS or IDRIVEN_LS = 0000b		100		mA
			IDRIVEN_HS or IDRIVEN_LS = 0001b		100		
			IDRIVEN_HS or IDRIVEN_LS = 0010b		200		
			IDRIVEN_HS or IDRIVEN_LS = 0011b		300		
			IDRIVEN_HS or IDRIVEN_LS = 0100b		600		
			IDRIVEN_HS or IDRIVEN_LS = 0101b		700		
			IDRIVEN_HS or IDRIVEN_LS = 0110b		800		
			IDRIVEN_HS or IDRIVEN_LS = 0111b		900		
			IDRIVEN_HS or IDRIVEN_LS = 1000b		1100		
			IDRIVEN_HS or IDRIVEN_LS = 1001b		1200		
			IDRIVEN_HS or IDRIVEN_LS = 1010b		1300		
			IDRIVEN_HS or IDRIVEN_LS = 1011b		1400		
			IDRIVEN_HS or IDRIVEN_LS = 1100b		1700		
			IDRIVEN_HS or IDRIVEN_LS = 1101b		1800		
			IDRIVEN_HS or IDRIVEN_LS = 1110b		1900		
			IDRIVEN_HS or IDRIVEN_LS = 1111b		2000		
		H/W Device	IDRIVE = Tied to GND		100		
			IDRIVE = 18 kΩ ± 5% tied to GND		200		
			IDRIVE = 75 kΩ ± 5% tied to GND		300		
			IDRIVE = Hi-Z		600		
			IDRIVE = 75 kΩ ± 5% tied to DVDD		900		
			IDRIVE = 18 kΩ ± 5% tied to DVDD		1400		
			IDRIVE = Tied to DVDD		2000		
I_{HOLD}	Gate holding current		Source current after t_{DRIVE}		50		mA
			Sink current after t_{DRIVE}		100		
I_{STRONG}	Gate strong pulldown current		GHx to SHx and GLx to SPx/SLx		2		A
R_{OFF}	Gate hold off resistor		GHx to SHx and GLx to SPx/SLx		150		kΩ
CURRENT SHUNT AMPLIFIER (SNx, SOx, SPx, VREF)							
G_{CSA}	Amplifier gain	SPI Device	CSA_GAIN = 00b	4.85	5	5.15	V/V
			CSA_GAIN = 01b	9.7	10	10.3	
			CSA_GAIN = 10b	19.4	20	20.6	
			CSA_GAIN = 11b	38.8	40	41.2	
		H/W Device	GAIN = Tied to GND	4.85	5	5.15	
			GAIN = 47 kΩ ± 5% tied to GND	9.7	10	10.3	
			GAIN = Hi-Z	19.4	20	20.6	
			GAIN = Tied to DVDD	38.8	40	41.2	
t_{SET}	Settling time to ±1%		V_{O_STEP} = 0.5 V, G_{CSA} = 5 V/V		250		ns
			V_{O_STEP} = 0.5 V, G_{CSA} = 10 V/V		500		
			V_{O_STEP} = 0.5 V, G_{VSA} = 20 V/V		1000		
			V_{O_STEP} = 0.5 V, G_{CSA} = 40 V/V		2000		
V_{COM}	Common mode input range			–0.15		0.15	V
V_{DIFF}	Differential mode input range			–0.3		0.3	V
V_{OFF}	Input offset error		V_{SP} = V_{SN} = 0 V	–3		3	mV
V_{DRIFT}	Drift offset		V_{SP} = V_{SN} = 0 V		10		µV/°C
V_{LINEAR}	SOx output voltage linear range			0.25		V_{VREF} – 0.25	V

Copyright © 2018–2019, Texas Instruments Incorporated

Electrical Characteristics (continued)

at T_A = –40°C to +125°C, V_{VM} = 9 to 75 V, V_{VDRAIN} = 9 to 100 V, V_{VIN} = 48 V (unless otherwise noted)

PARAMETER			TEST CONDITIONS	MIN	TYP	MAX	UNIT
V_{BIAS}	SOx output voltage bias	SPI Device	V_{SP} = V_{SN} = 0 V, VREF_DIV = 0b		V_{VREF} – 0.3		V
			V_{SP} = V_{SN} = 0 V, VREF_DIV = 1b		V_{VREF} / 2		
		H/W Device	V_{SP} = V_{SN} = 0 V		V_{VREF} / 2		
I_{BIAS}	SPx/SNx input bias current					250	µA
V_{SLEW}	SOx output slew rate		60-pF load		10		V/µs
I_{VREF}	VREF input current		V_{VREF} = 5 V		1.5	2.5	mA
UGB	Unity gain bandwidth		DRV835x: 60-pF load		10		MHz
			DRV835xR: 60-pF load		1		MHz
PROTECTION CIRCUITS							
V_{VM_UV}	VM undervoltage lockout		DRV835x: VM falling, UVLO report	8.0	8.3	8.8	V
			DRV835x: VM rising, UVLO recovery	8.2	8.5	9.0	
			DRV835xR: VM falling, UVLO report	8.0	8.3	8.6	
			DRV835xR: VM rising, UVLO recovery	8.2	8.5	8.8	
V_{VM_UVH}	VM undervoltage hysteresis		Rising to falling threshold		200		mV
t_{VM_UVD}	VM undervoltage deglitch time		VM falling, UVLO report		10		µs
V_{VDR_UV}	VDRAIN undervoltage lockout		DRV835x: VDRAIN falling, UVLO report	6.1	6.4	6.8	V
			DRV835x: VDRAIN rising, UVLO recovery	6.3	6.6	7.0	
			DRV835xR: VDRAIN falling, UVLO report	6.1	6.4	6.7	
			DRV835xR: VDRAIN rising, UVLO recovery	6.3	6.6	6.9	
V_{VDR_UVH}	VDRAIN undervoltage hysteresis		Rising to falling threshold		200		mV
t_{VDR_UVD}	VDRAIN undervoltage deglitch time		VDRAIN falling, UVLO report		10		µs
V_{VCP_UV}	VCP charge pump undervoltage lockout		VCP falling, GDUV report		V_{DRAIN} + 5		V
V_{VGLS_UV}	VGLS low-side regulator undervoltage lockout		VGLS falling, GDUV report		4.25		V
V_{GS_CLAMP}	High-side gate clamp		Positive clamping voltage	12.5	13.5	16	V
			Negative clamping voltage		–0.7		

Copyright © 2018–2019, Texas Instruments Incorporated

Electrical Characteristics (continued)

at T_A = –40°C to +125°C, V_{VM} = 9 to 75 V, V_{VDRAIN} = 9 to 100 V, V_{VIN} = 48 V (unless otherwise noted)

PARAMETER			TEST CONDITIONS	MIN	TYP	MAX	UNIT
V_{VDS_OCP}	V_{DS} overcurrent trip voltage	SPI Device	DRV835x: VDS_LVL = 0000b	0.041	0.06	0.072	V
			DRV835x: VDS_LVL = 0001b	0.051	0.07	0.084	
			DRV835x: VDS_LVL = 0010b	0.061	0.08	0.096	
			DRV835x: VDS_LVL = 0011b	0.071	0.09	0.108	
			DRV835x: VDS_LVL = 0100b	0.081	0.1	0.115	
			DRV835xR: VDS_LVL = 0000b	0.048	0.06	0.072	
			DRV835xR: VDS_LVL = 0001b	0.056	0.07	0.084	
			DRV835xR: VDS_LVL = 0010b	0.064	0.08	0.096	
			DRV835xR: VDS_LVL = 0011b	0.072	0.09	0.108	
			DRV835xR: VDS_LVL = 0100b	0.085	0.1	0.115	
			VDS_LVL = 0101b	0.18	0.2	0.22	
			VDS_LVL = 0110b	0.27	0.3	0.33	
			VDS_LVL = 0111b	0.36	0.4	0.44	
			VDS_LVL = 1000b	0.45	0.5	0.55	
			VDS_LVL = 1001b	0.54	0.6	0.66	
			VDS_LVL = 1010b	0.63	0.7	0.77	
			VDS_LVL = 1011b	0.72	0.8	0.88	
			VDS_LVL = 1100b	0.81	0.9	0.99	
			VDS_LVL = 1101b	0.9	1.0	1.1	
			VDS_LVL = 1110b	1.35	1.5	1.65	
			VDS_LVL = 1111b	1.8	2	2.2	
		H/W Device	DRV835x: VDS = Tied to GND	0.041	0.06	0.072	V
			DRV835x: VDS = 18 kΩ ± 5% tied to GND	0.081	0.1	0.115	
			DRV835xR: VDS = Tied to GND	0.048	0.06	0.072	
			DRV835xR: VDS = 18 kΩ ± 5% tied to GND	0.085	0.1	0.115	
			VDS = 75 kΩ ± 5% tied to GND	0.18	0.2	0.22	
			VDS = Hi-Z	0.36	0.4	0.44	
			VDS = 75 kΩ ± 5% tied to DVDD	0.63	0.7	0.77	
			VDS = 18 kΩ ± 5% tied to DVDD	0.9	1	1.1	
			VDS = Tied to DVDD		Disabled		
t_{OCP_DEG}	V_{DS} and V_{SENSE} overcurrent deglitch time	SPI Device	OCP_DEG = 00b		1		µs
			OCP_DEG = 01b		2		
			OCP_DEG = 10b		4		
			OCP_DEG = 11b		8		
		H/W Device			4		
V_{SEN_OCP}	V_{SENSE} overcurrent trip voltage	SPI Device	SEN_LVL = 00b		0.25		V
			SEN_LVL = 01b		0.5		
			SEN_LVL = 10b		0.75		
			SEN_LVL = 11b		1		
		H/W Device			1		
t_{RETRY}	Overcurrent retry time	SPI Device	TRETRY = 0b		8		ms
			TRETRY = 1b		50		µs
		H/W Device			8		ms
T_{OTW}	Thermal warning temperature		Die temperature, T_J	130	150	170	°C
T_{OTSD}	Thermal shutdown temperature		Die temperature, T_J	150	170	190	°C
T_{HYS}	Thermal hysteresis		Die temperature, T_J		20		°C
BUCK REGULATOR VCC							
V_{VCC_REG}	VCC regulator voltage			6.6	7	7.4	V
			V_{VIN} = 6 to 8.5 V		100		mV
V_{VCC_BYT}	VCC bypass threshold		V_{VIN} increasing		8.5		V

Copyright © 2018–2019, Texas Instruments Incorporated

Electrical Characteristics (continued)

at T_A = –40°C to +125°C, V_{VM} = 9 to 75 V, V_{VDRAIN} = 9 to 100 V, V_{VIN} = 48 V (unless otherwise noted)

PARAMETER		TEST CONDITIONS	MIN	TYP	MAX	UNIT
V_{VCC_BYH}	VCC bypass hysteresis			300		mV
V_{VCC_OUT}	VCC output impedance	V_{VIN} = 6 V		100		Ω
		V_{VIN} = 10 V		8.8		Ω
		V_{VIN} = 48 V		0.8		Ω
V_{VCC_LIM}	VCC current limit			9.2		mA
V_{VCC_UV}	VCC undervoltage lockout			5.3		V
V_{VCC_UVH}	VCC undervoltage lockout hysteresis			190		mV
V_{VCC_UVFD}	VCC filter delay			3		µs
I_{IN_OP}	IIN operating current	FB = 3 V		550	750	µA
I_{IN_OP}	IIN shutdown current	RT/SD = 0 V		110	176	µA
BUCK REGULATOR SWITCHING						
$R_{DS(on)}$	Buck switch $R_{DS(on)}$	I_{TEST} = 200 mA		1.25	2.57	Ω
V_{GATE_UV}	Gate drive undervoltage lockout	V_{BST} - V_{SW} rising	2.8	3.8	4.8	V
V_{GATE_UVH}	Gate drive undervoltage lockout hysteresis			490		mV
V_{SWITCH}	Pre-charge switch voltage	At 1 mA		0.8		V
t_{ON}	Pre-charge switch on-time			150		ns
BUCK REGULATOR CURRENT LIMIT						
I_{LIMIT}	Current limit threshold		0.41	0.51	0.61	A
t_{LIM}	Current limit response time	I_{SW} overdrive = 0.1 A, time to switch off		350		ns
t_{OFF1}	Off time generator	FB = 0 V, RCL = 100 kΩ		35		µs
t_{OFF2}	Off time generator	FB = 2.3 V, RCL = 100 kΩ		2.56		µs
BUCK REGULATOR ON TIME GENERATOR						
t_{ON1}	Ton 1	V_{VIN} = 10 V, RON = 200 kΩ	2.15	2.77	3.5	µs
t_{ON2}	Ton 2	V_{VIN} = 95 V, RON = 200 kΩ	200	300	420	µs
V_{SDT}	Remote shutdown threshold	Rising	0.4	0.7	1.05	V
V_{SDH}	Remote shutdown hysteresis			35		mV
BUCK REGULATOR MINIMUM OFF TIME						
t_{OFF_MIN}	Minimum off time	FB = 0 V		300		ns
BUCK REGULATOR REGULATIONS AND OV COMPARATORS						
V_{FB}	FB reference threshold	Internal reference, trip point for switch on	2.445	2.5	2.55	V
V_{FB_OV}	FB overvoltage threshold	Trip point for switch off		2.875		V
I_{FB_BIAS}	FB bias current			100		µA
BUCK REGULATOR THERMAL SHUTDOWN						
T_{SD}	Thermal shutdown threshold			165		°C
T_{SDH}	Thermal shutdown hysteresis			25		°C

Copyright © 2018–2019, Texas Instruments Incorporated

7.6 SPI Timing Requirements

at T_A = –40°C to +125°C, V_{VM} = 9 to 75 V (unless otherwise noted)

			MIN	NOM	MAX	UNIT
t_{READY}	SPI ready after enable	VM > UVLO, ENABLE = 3.3 V			1	ms
t_{CLK}	SCLK minimum period		100			ns
t_{CLKH}	SCLK minimum high time		50			ns
t_{CLKL}	SCLK minimum low time		50			ns
t_{SU_SDI}	SDI input data setup time		20			ns
t_{H_SDI}	SDI input data hold time		30			ns
t_{D_SDO}	SDO output data delay time	SCLK high to SDO valid			30	ns
t_{SU_nSCS}	nSCS input setup time		50			ns
t_{H_nSCS}	nSCS input hold time		50			ns
t_{HI_nSCS}	nSCS minimum high time before active low		400			ns
t_{DIS_nSCS}	nSCS disable time	nSCS high to SDO high impedance		10		ns

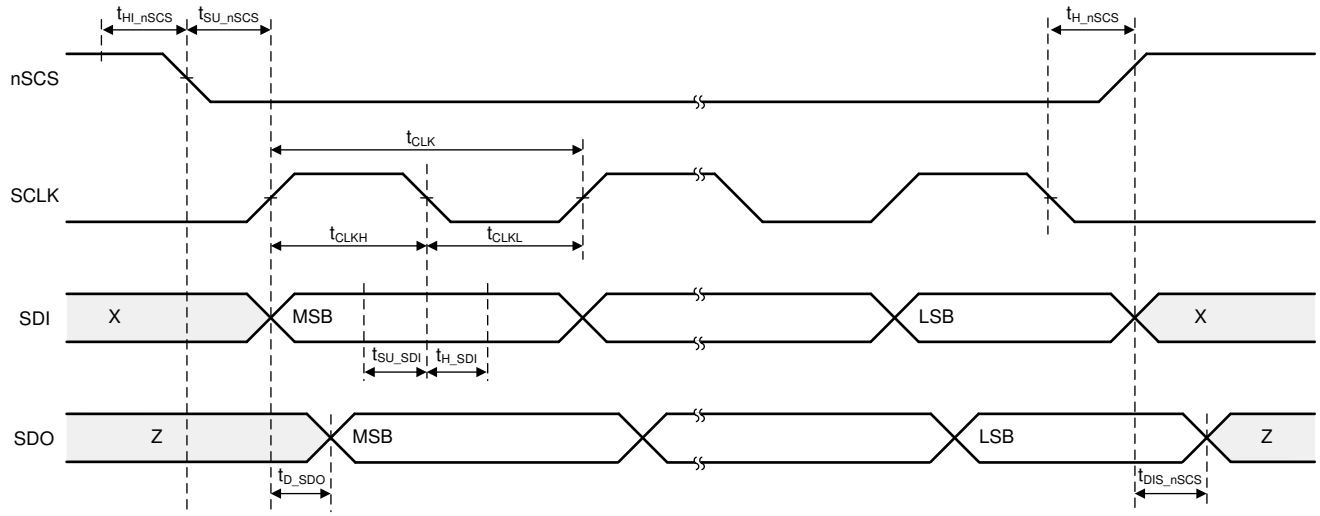

图 1. SPI Slave Mode Timing Diagram

版权 © 2018–2019, Texas Instruments Incorporated

7.7 Typical Characteristics

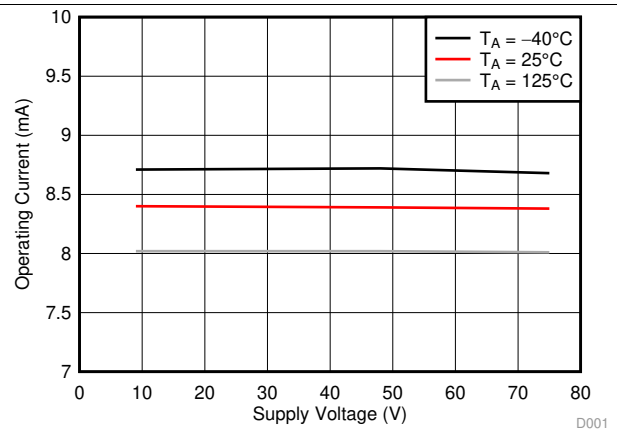

$V_{VM} = V_{VDRAIN}$

图 2. VM Supply Current Over Supply Voltage

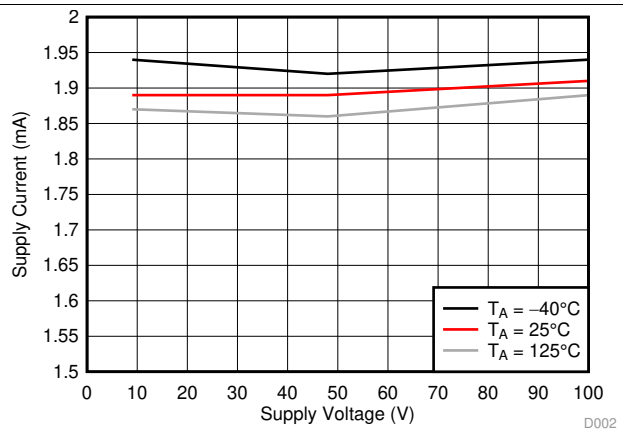

$V_{VM} = V_{VDRAIN}$

图 3. V_{DRAIN} Supply Current Over Supply Voltage

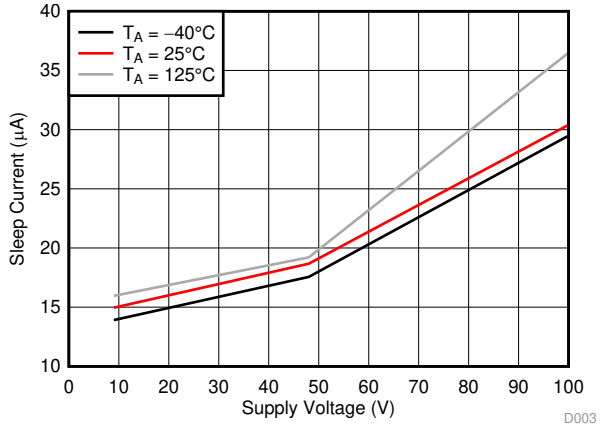

$I_{VM} + I_{VDRAIN}$

图 4. Sleep Current Over Supply Voltage

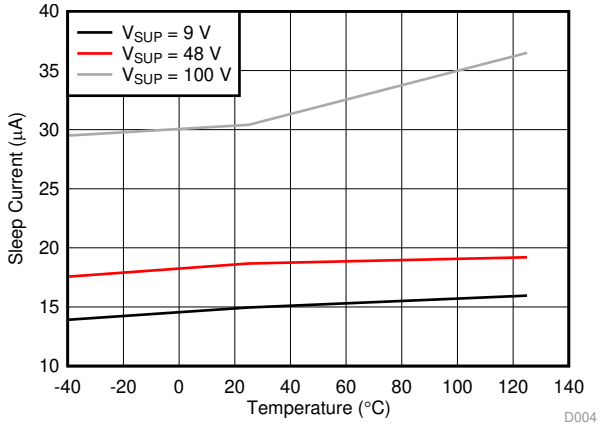

$I_{VM} + I_{VDRAIN}$

图 5. Sleep Current Over Temperature

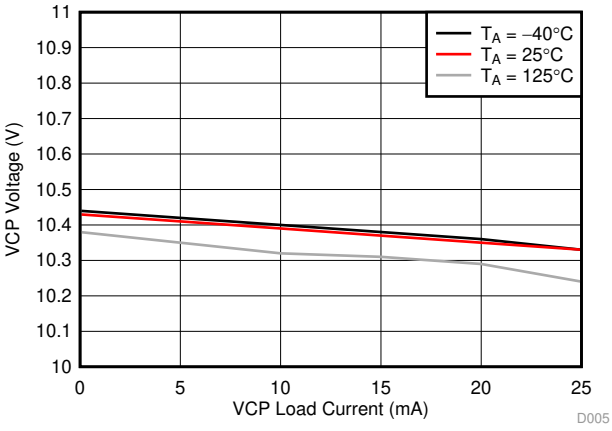

V_{VM} = 48-V

图 6. VCP Voltage Over Load

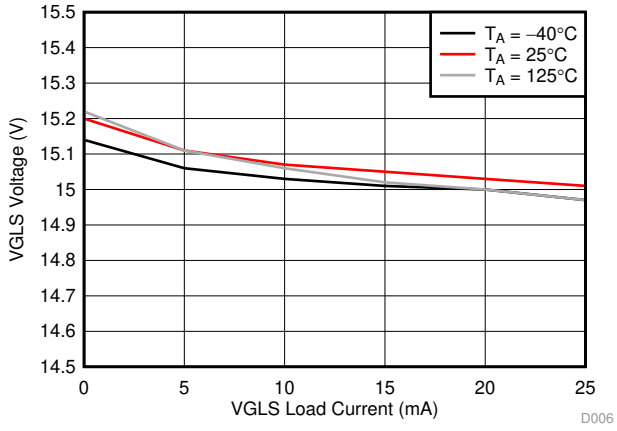

V_{VM} = 48-V

图 7. VGLS Voltage Over Load Current

Typical Characteristics (接下页)

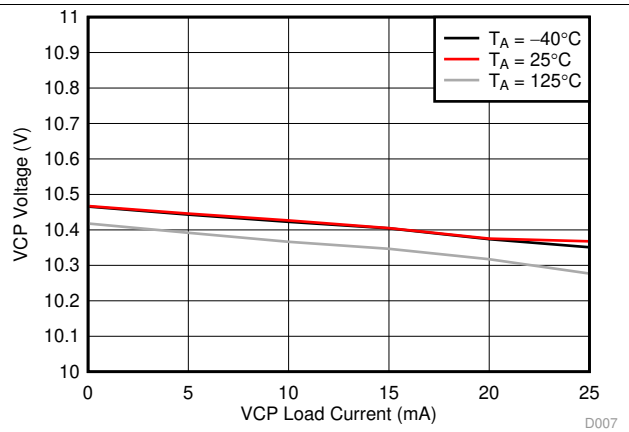

V_{VM} = 15-V

图 8. VCP Voltage Over Load Current

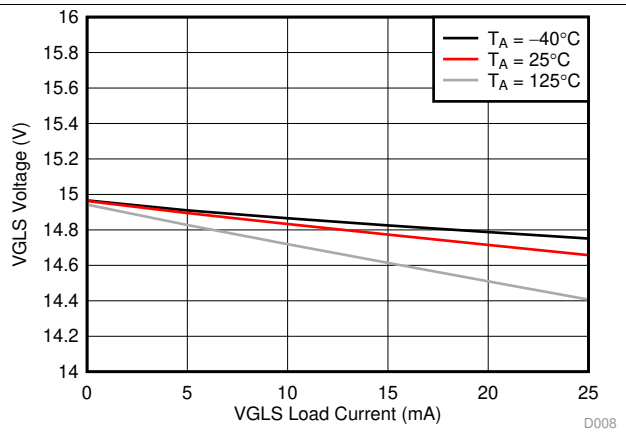

V_{VM} = 15-V

图 9. VGLS Voltage Over Load Current

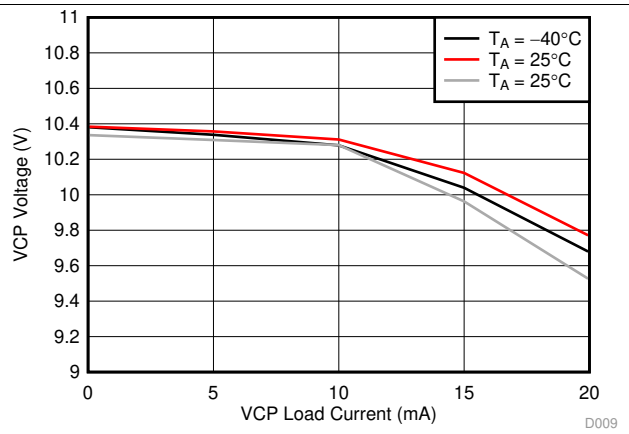

V_{VM} = 12-V

图 10. VCP Voltage Over Load Current

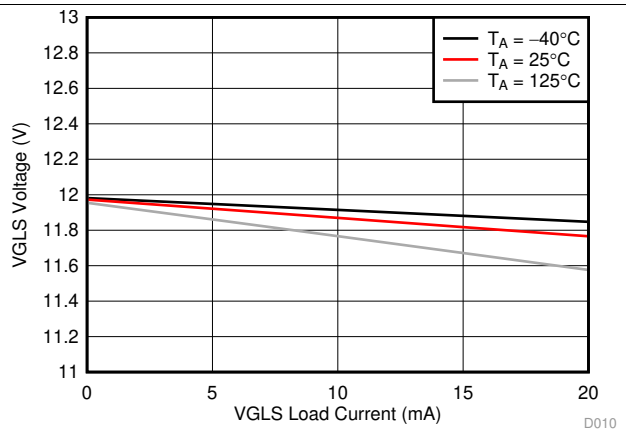

V_{VM} = 12-V

图 11. VGLS Voltage Over Load Current

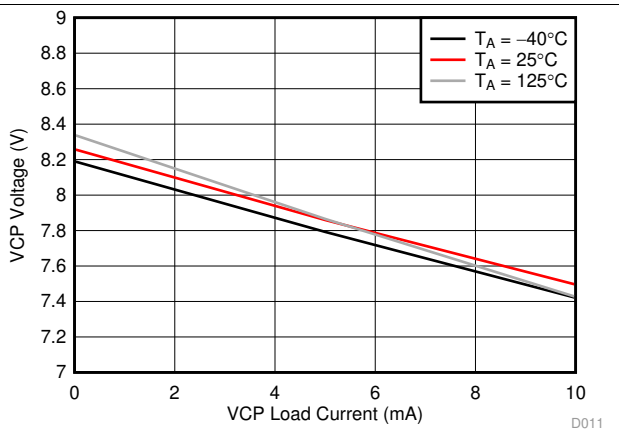

V_{VM} = 9-V

图 12. VCP Voltage Over Load Current

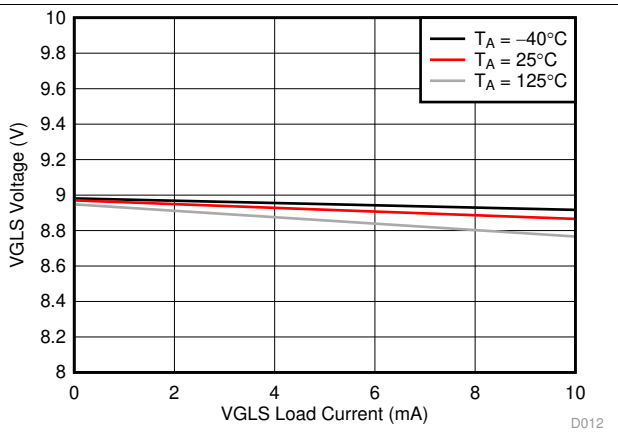

V_{VM} = 9-V

图 13. VGLS Voltage Over Load Current

版权 © 2018–2019, Texas Instruments Incorporated

8 Detailed Description

8.1 Overview

The DRV835x family of devices are integrated 100-V gate drivers for three-phase motor drive applications. These devices decrease system component count, cost, and complexity by integrating three independent half-bridge gate drivers, charge pump and linear regulator for the high-side and low-side gate driver supply voltages, optional triple current shunt amplifiers, and an optional 350-mA buck regulator. A standard serial peripheral interface (SPI) provides a simple method for configuring the various device settings and reading fault diagnostic information through an external controller. Alternatively, a hardware interface (H/W) option allows for configuring the most commonly used settings through fixed external resistors.

The gate drivers support external N-channel high-side and low-side power MOSFETs and can drive up to 1-A source, 2-A sink peak currents with a 25-mA average output current. The high-side gate drive supply voltage is generated using a doubler charge-pump architecture that regulates the VCP output to V_{VDRAIN} + 10.5-V. The low-side gate drive supply voltage is generated using a linear regulator from the VM power supply that regulates the VGLS output to 14.5-V. The VGLS supply is further regulated to 11-V on the GLx low-side gate driver outputs. A smart gate-drive architecture provides the ability to dynamically adjust the output gate-drive current strength allowing for the gate driver to control the power MOSFET V_{DS} switching speed. This allows for the removal of external gate drive resistors and diodes reducing BOM component count, cost, and PCB area. The architecture also uses an internal state machine to protect against gate-drive short-circuit events, control the half-bridge dead time, and protect against dV/dt parasitic turnon of the external power MOSFET.

The gate drivers can operate in either a single or dual supply architecture. In the single supply architecture, VM can be tied to VDRAIN and is regulated to the correct supply voltages internally. In the dual supply architecture, VM can be connected to a lower voltage supply from a more efficient switching regulator to improve the device efficiency. VDRAIN stays connected to the external MOSFETs to set the correct charge pump and overcurrent monitor reference.

The DRV8353 and DRV8353R devices integrate three, bidirectional current-shunt amplifiers for monitoring the current level through each of the external half-bridges using a low-side shunt resistor. The gain setting of the shunt amplifier can be adjusted through the SPI or hardware interface with the SPI providing additional flexibility to adjust the output bias point.

The DRV8350R and DRV8353R devices integrate a 350-mA buck regulator that can be used to power an external controller or other logic circuits. The buck regulator is implemented as a separate internal die that can use either the same or a different power supply from the gate driver.

In addition to the high level of device integration, the DRV835x family of devices provides a wide range of integrated protection features. These features include power-supply undervoltage lockout (UVLO), gate drive undervoltage lockout (GDUV), V_{DS} overcurrent monitoring (OCP), gate-driver short-circuit detection (GDF), and overtemperature shutdown (OTW/OTSD). Fault events are indicated by the nFAULT pin with detailed information available in the SPI registers on the SPI device version.

The DRV835x family of devices are available in 0.5-mm pin pitch, QFN surface-mount packages. The QFN sizes are 5 × 5 mm for the 32-pin package, 6 × 6 mm for the 40-pin package, and 7 × 7 mm for the 48-pin package.

8.2 Functional Block Diagram

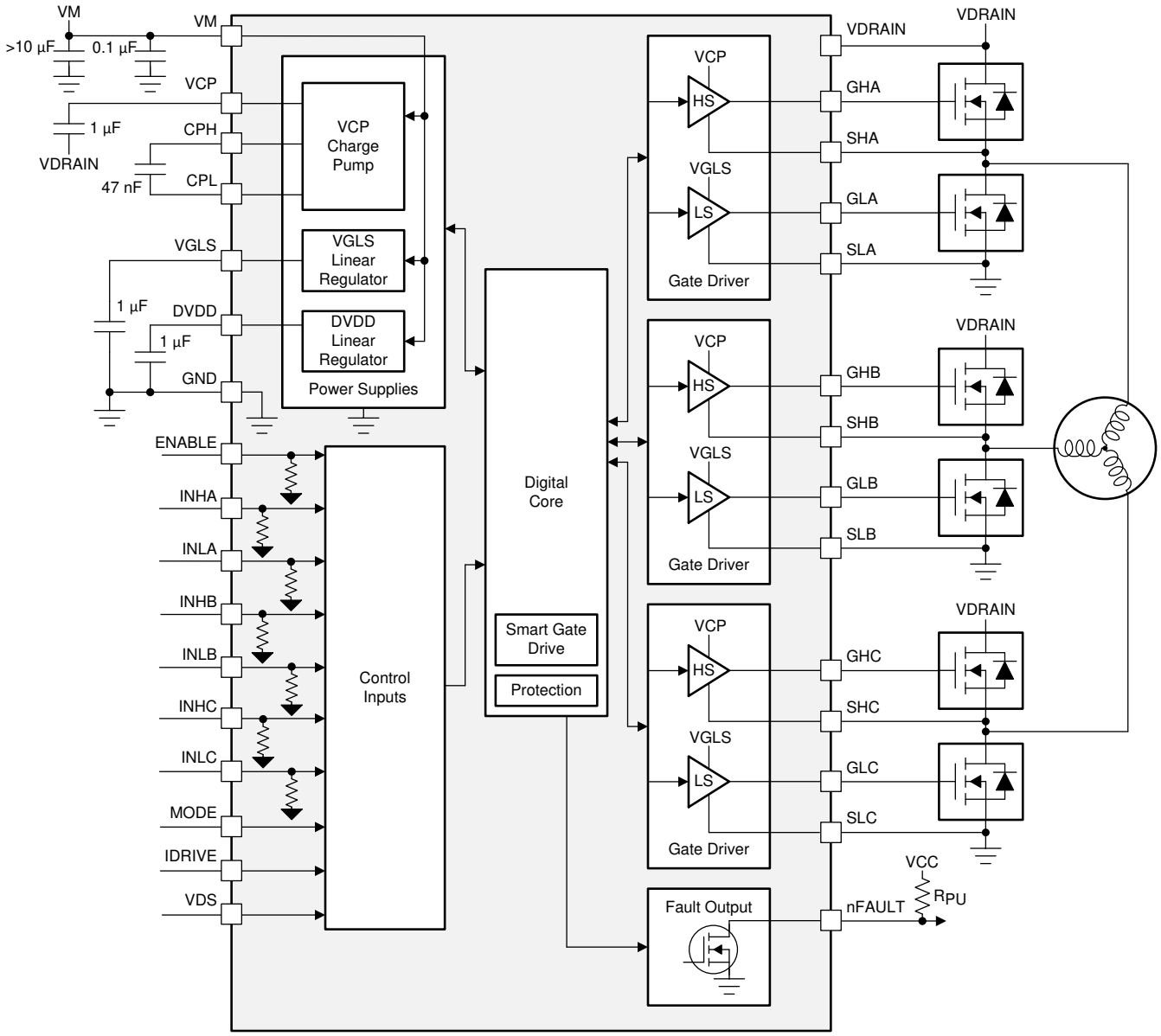

图 14. Block Diagram for DRV8350H

版权 © 2018–2019, Texas Instruments Incorporated

Functional Block Diagram (接下页)

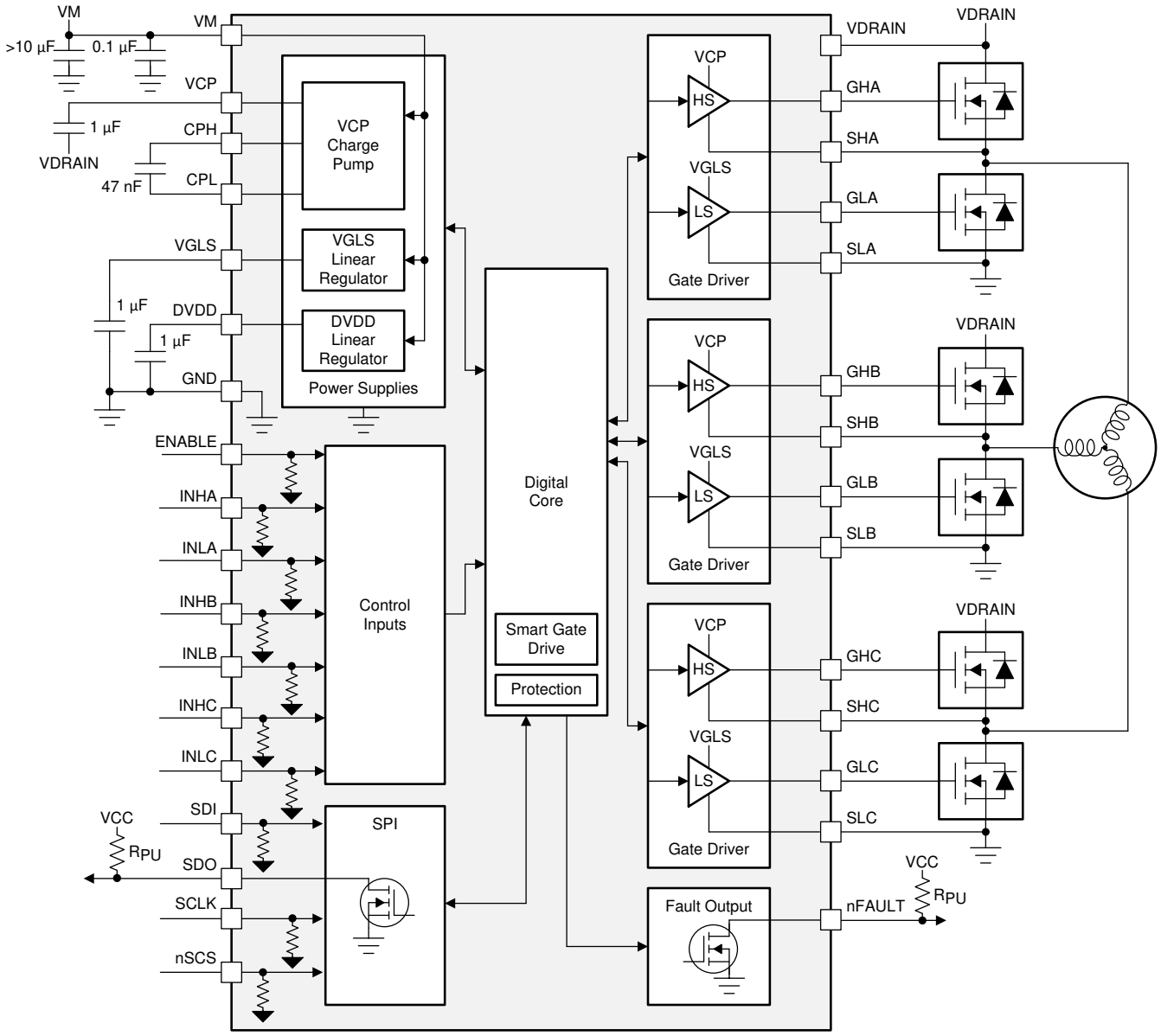

图 15. Block Diagram for DRV8350S

Functional Block Diagram (接下页)

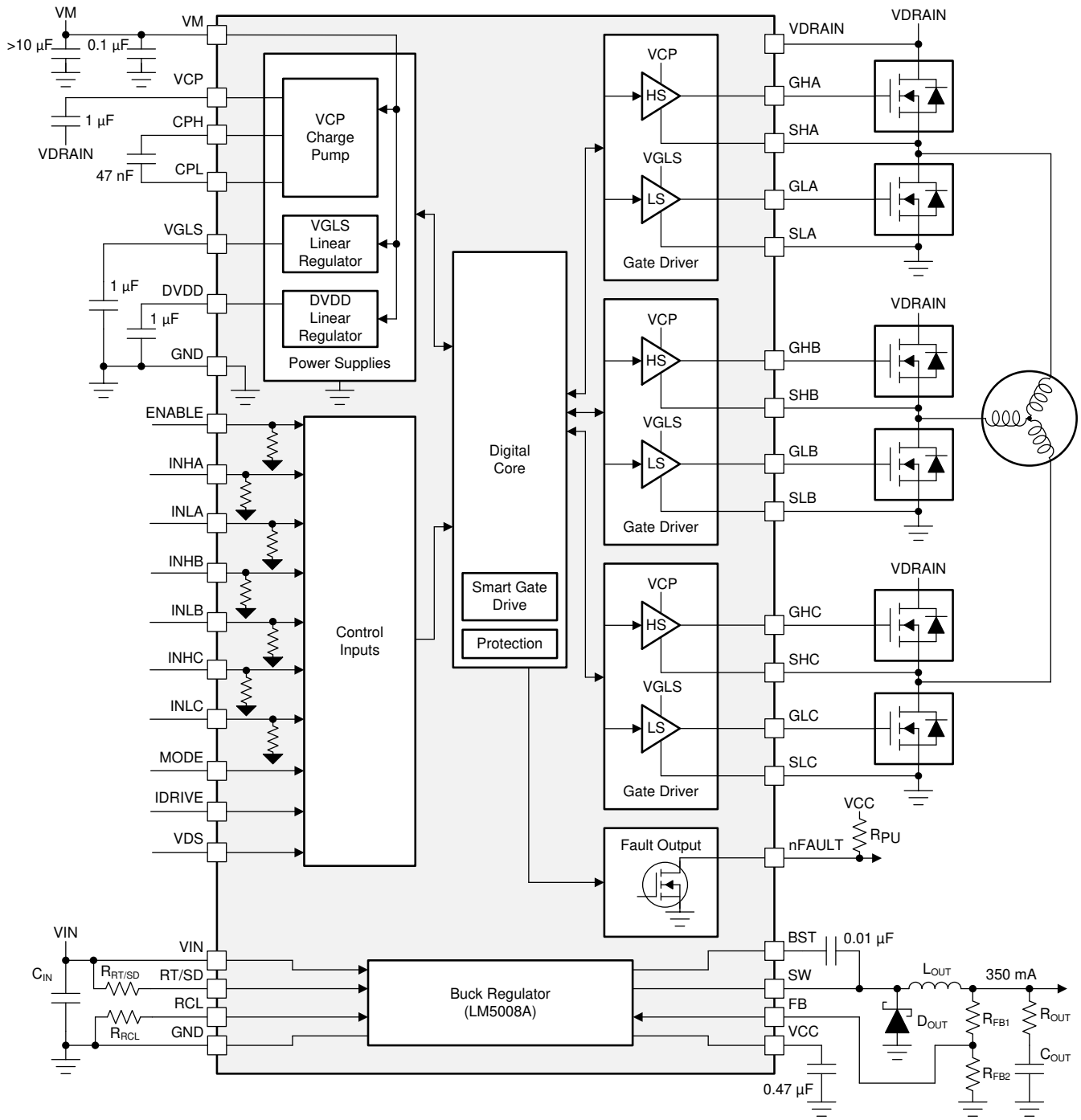

图 16. Block Diagram for DRV8350RH

版权 © 2018–2019, Texas Instruments Incorporated

Functional Block Diagram (接下页)

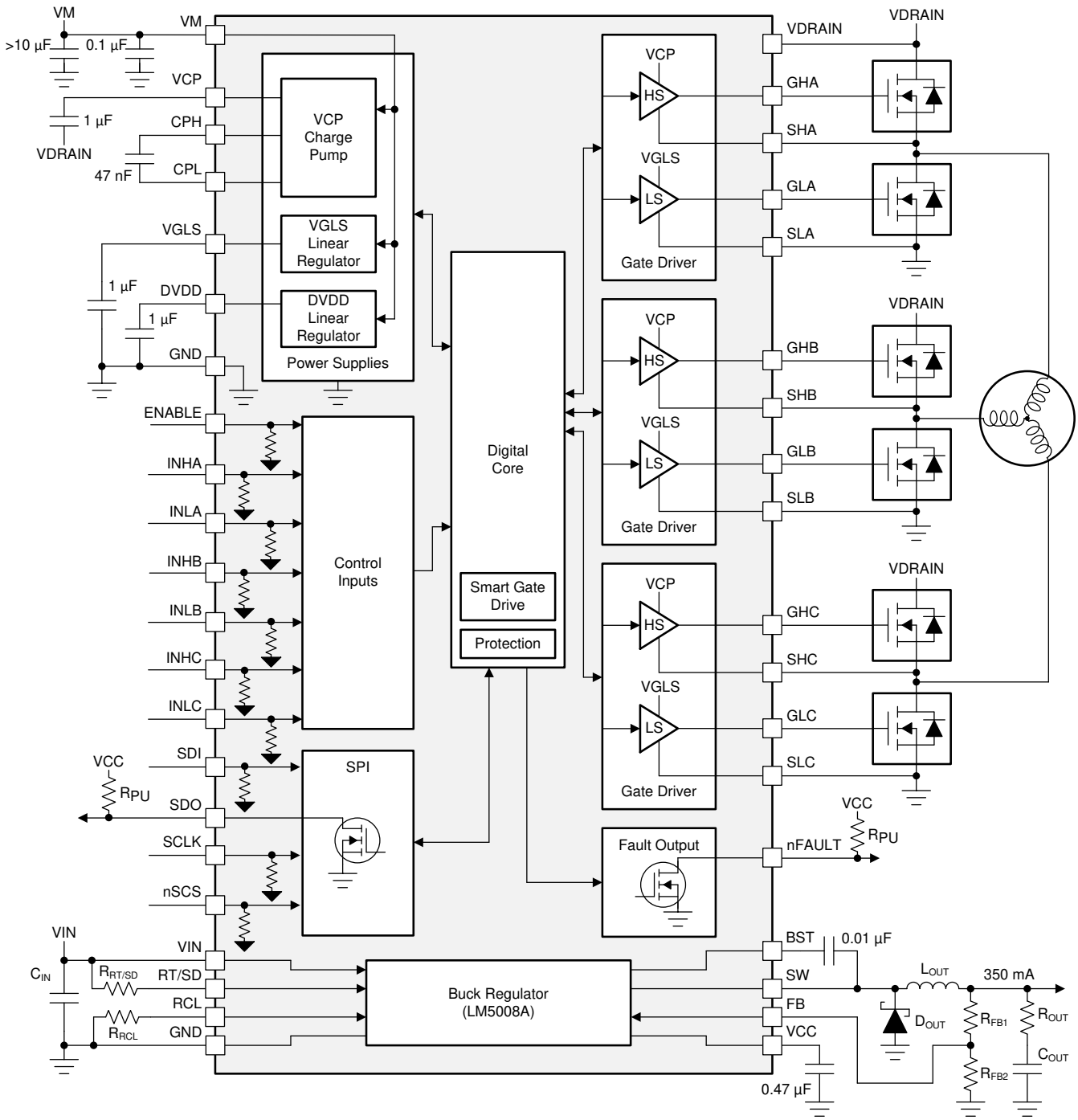

图 17. Block Diagram for DRV8350RS

Functional Block Diagram (接下页)

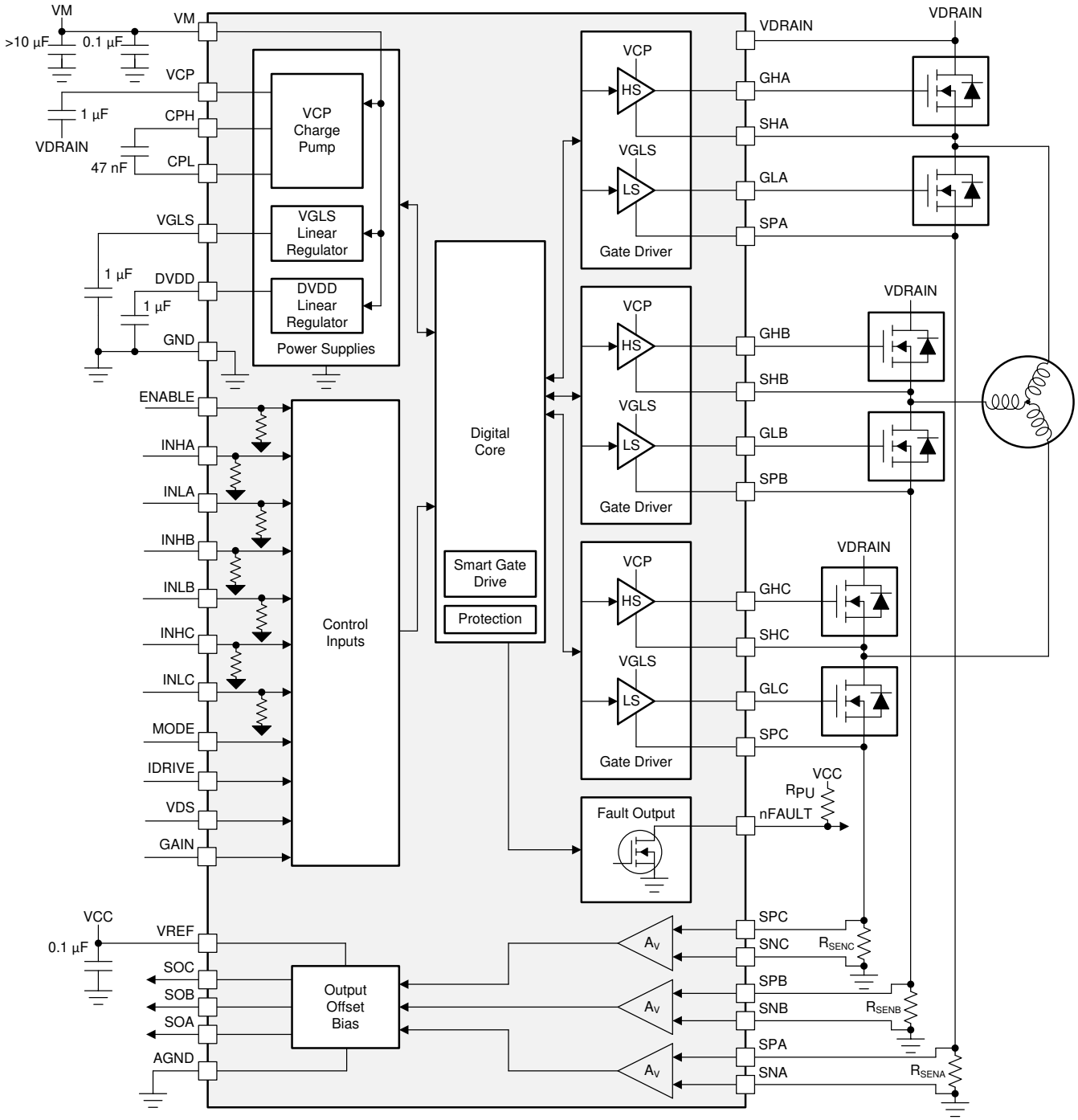

图 18. Block Diagram for DRV8353H

版权 © 2018–2019, Texas Instruments Incorporated

Functional Block Diagram (接下页)

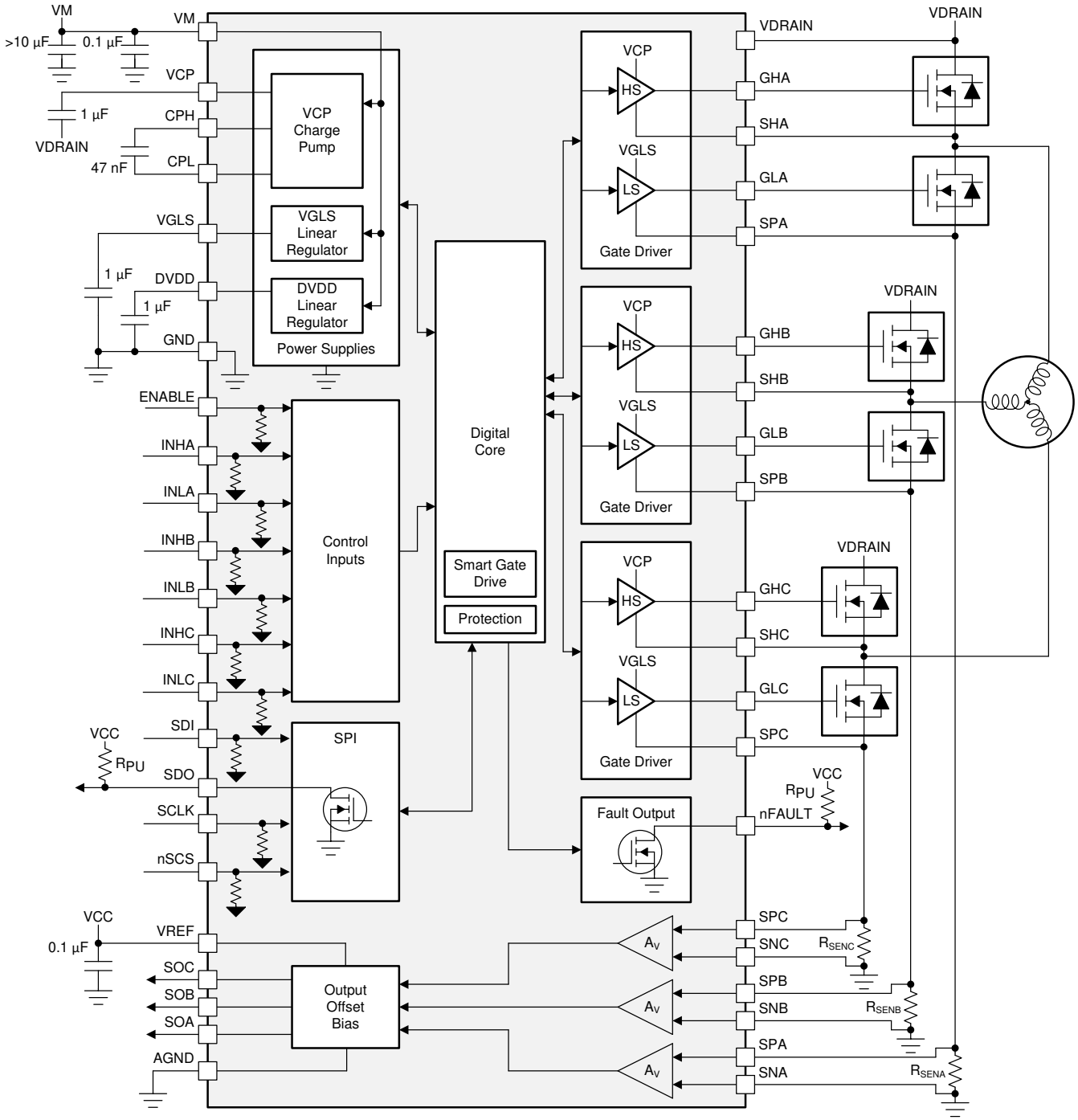

图 19. Block Diagram for DRV8353S

Functional Block Diagram (接下页)

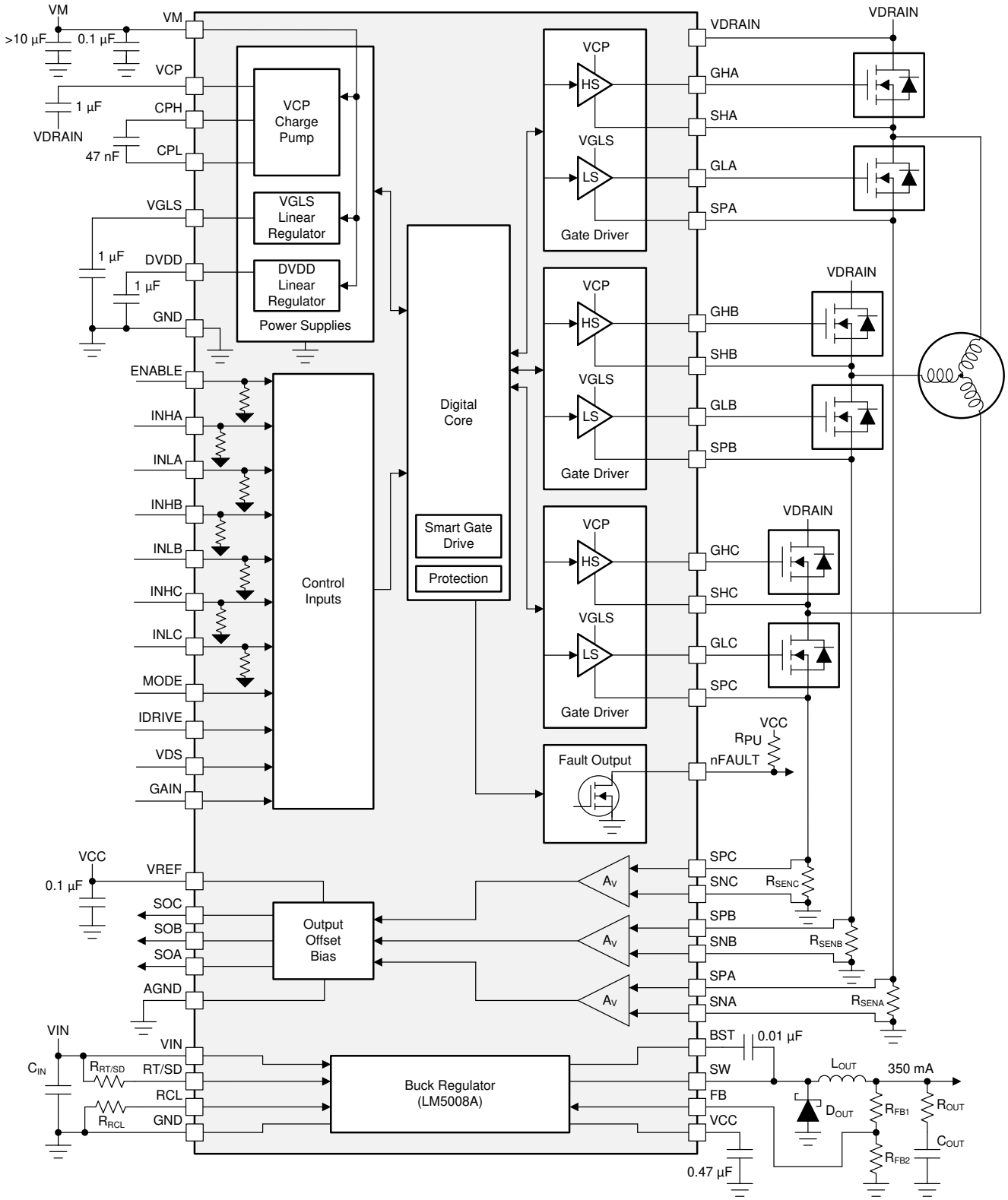

图 20. Block Diagram for DRV8353RH

版权 © 2018–2019, Texas Instruments Incorporated

Functional Block Diagram (接下页)

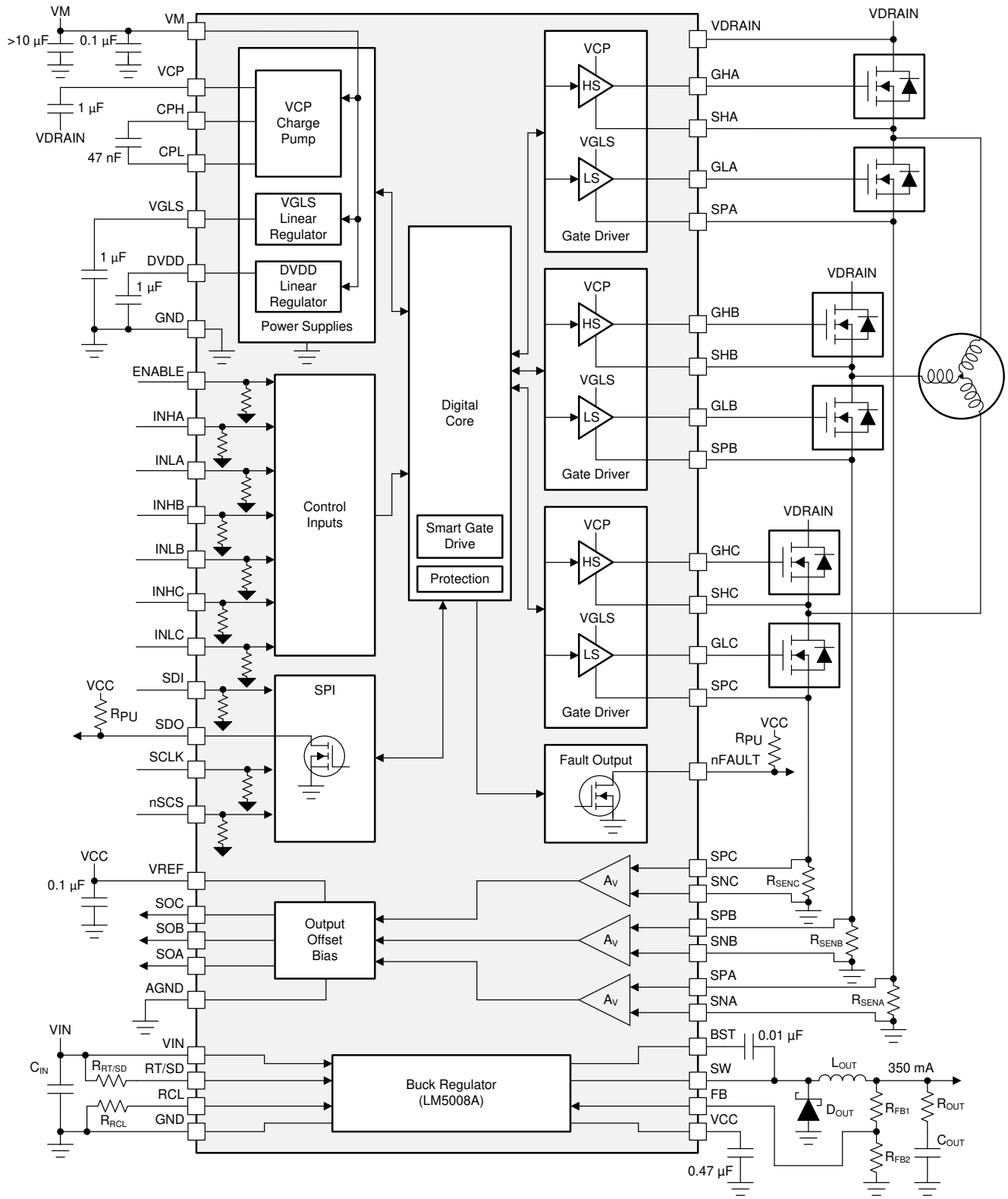

图 21. Block Diagram for DRV8353RS

8.3 Feature Description

8.3.1 Three Phase Smart Gate Drivers

The DRV835x family of devices integrates three, half-bridge gate drivers, each capable of driving high-side and low-side N-channel power MOSFETs. The VCP doubler charge pump provides the correct gate bias voltage to the high-side MOSFET across a wide operating voltage range in addition to providing 100% duty-cycle support. The internal VGLS linear regulator provides the gate-bias voltage for the low-side MOSFETs. The half-bridge gate drivers can be used in combination to drive a three-phase motor or separately to drive other types of loads.

The DRV835x family of devices implement a smart gate-drive architecture which allows the user to dynamically adjust the gate drive current without requiring external gate current limiting resistors. Additionally, this architecture provides a variety of protection features for the external MOSFETs including automatic dead-time insertion, parasitic dV/dt gate turnon prevention, and gate-fault detection.

8.3.1.1 PWM Control Modes

The DRV835x family of devices provides four different PWM control modes to support various commutation and control methods. Texas Instruments does not recommend changing the MODE pin or PWM_MODE register during operation of the power MOSFETs. Set all INHx and INLx pins to logic low before making a MODE or PWM_MODE change.

8.3.1.1.1 6x PWM Mode (PWM_MODE = 00b or MODE Pin Tied to AGND)

In this mode, each half-bridge supports three output states: low, high, or high-impedance (Hi-Z). The corresponding INHx and INLx signals control the output state as listed in 表 1.

表 1. 6x PWM Mode Truth Table

INLx	INHx	GLx	GHx	SHx
0	0	L	L	Hi-Z
0	1	L	H	H
1	0	H	L	L
1	1	L	L	Hi-Z

8.3.1.1.2 3x PWM Mode (PWM_MODE = 01b or MODE Pin = 47 kΩ to AGND)

In this mode, the INHx pin controls each half-bridge and supports two output states: low or high. The INLx pin is used to change the half-bridge to high impedance. If the high-impedance (Hi-Z) sate is not required, tie all INLx pins logic high. The corresponding INHx and INLx signals control the output state as listed in 表 2.

表 2. 3x PWM Mode Truth Table

INLx	INHx	GLx	GHx	SHx
0	X	L	L	Hi-Z
1	0	H	L	L
1	1	L	H	H

8.3.1.1.3 1x PWM Mode (PWM_MODE = 10b or MODE Pin = Hi-Z)

In this mode, the DRV835x family of devices uses 6-step block commutation tables that are stored internally. This feature allows for a three-phase BLDC motor to be controlled using a single PWM sourced from a simple controller. The PWM is applied on the INHA pin and determines the output frequency and duty cycle of the half-bridges.

The half-bridge output states are managed by the INLA, INHB, and INLB pins which are used as state logic inputs. The state inputs can be controlled by an external controller or connected directly to hall sensor digital outputs from the motor (INLA = HALL_A, INHB = HALL_B, INLB = HALL_C). The 1x PWM mode usually operates with synchronous rectification, however it can be configured to use asynchronous diode freewheeling rectification on SPI devices. This configuration is set using the 1PWM_COM bit through the SPI registers.

The INHC input controls the direction through the 6-step commutation table which is used to change the direction of the motor when hall sensors are directly controlling the INLA, INHB, and INLB state inputs. Tie the INHC pin low if this feature is not required.

版权 © 2018–2019, Texas Instruments Incorporated

The INLC input brakes the motor by turning off all high-side MOSFETs and turning on all low-side MOSFETs when it is pulled low. This brake is independent of the states of the other input pins. Tie the INLC pin high if this feature is not required.

表 3. Synchronous 1x PWM Mode

LOGIC AND HALL INPUTS							GATE-DRIVE OUTPUTS						
STATE	INHC = 0			INHC = 1			PHASE A		PHASE B		PHASE C		DESCRIPTION
	INLA	INHB	INLB	INLA	INHB	INLB	GHA	GLA	GHB	GLB	GHC	GLC	
Stop	0	0	0	0	0	0	L	L	L	L	L	L	Stop
Align	1	1	1	1	1	1	PWM	!PWM	L	H	L	H	Align
1	1	1	0	0	0	1	L	L	PWM	!PWM	L	H	B → C
2	1	0	0	0	1	1	PWM	!PWM	L	L	L	H	A → C
3	1	0	1	0	1	0	PWM	!PWM	L	H	L	L	A → B
4	0	0	1	1	1	0	L	L	L	H	PWM	!PWM	C → B
5	0	1	1	1	0	0	L	H	L	L	PWM	!PWM	C → A
6	0	1	0	1	0	1	L	H	PWM	!PWM	L	L	B → A

表 4. Asynchronous 1x PWM Mode 1PWM_COM = 1 (SPI Only)

LOGIC AND HALL INPUTS							GATE-DRIVE OUTPUTS						
STATE	INHC = 0			INHC = 1			PHASE A		PHASE B		PHASE C		DESCRIPTION
	INLA	INHB	INLB	INLA	INHB	INLB	GHA	GLA	GHB	GLB	GHC	GLC	
Stop	0	0	0	0	0	0	L	L	L	L	L	L	Stop
Align	1	1	1	1	1	1	PWM	L	L	H	L	H	Align
1	1	1	0	0	0	1	L	L	PWM	L	L	H	B → C
2	1	0	0	0	1	1	PWM	L	L	L	L	H	A → C
3	1	0	1	0	1	0	PWM	L	L	H	L	L	A → B
4	0	0	1	1	1	0	L	L	L	H	PWM	L	C → B
5	0	1	1	1	0	0	L	H	L	L	PWM	L	C → A
6	0	1	0	1	0	1	L	H	PWM	L	L	L	B → A

图 22 and 图 23 show the different possible configurations in 1x PWM mode.

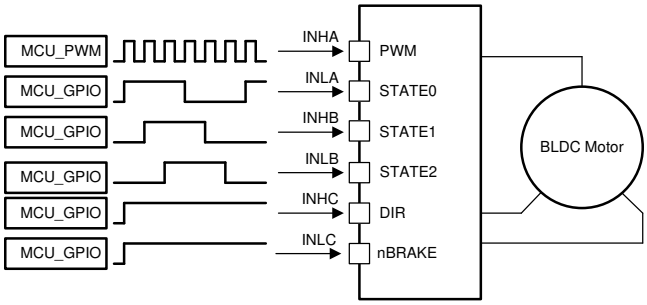

图 22. 1x PWM—Simple Controller

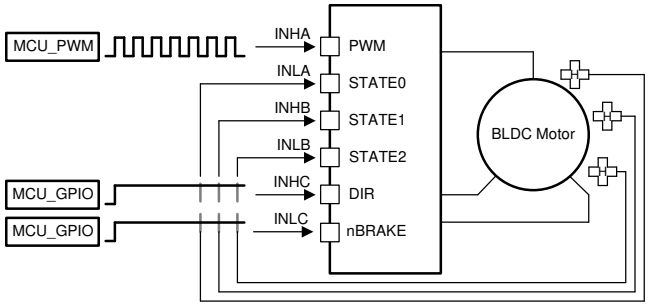

图 23. 1x PWM—Hall Sensor

8.3.1.1.4 Independent PWM Mode (PWM_MODE = 11b or MODE Pin Tied to DVDD)

In this mode, the corresponding input pin independently controls each high-side and low-side gate driver. This control mode allows for the external controller to bypass the internal dead-time handshake of the DRV835x or to utilize the high-side and low-side drivers to drive separate high-side and low-side loads with each half-bridge. These types of loads include unidirectional brushed DC motors, solenoids, and low-side and high-side switches. In this mode, If the system is configured in a half-bridge configuration, shoot-through occurs when the high-side and low-side MOSFETs are turned on at the same time.

表 5. Independent PWM Mode Truth Table

INLx	INHx	GLx	GHx
0	0	L	L
0	1	L	H
1	0	H	L
1	1	H	H

Because the high-side and low-side V_{DS} overcurrent monitors share the SHx sense line, using both of the monitors is not possible if both the high-side and low-side gate drivers are being operated independently.

In this case, connect the SHx pin to the high-side driver and disable the V_{DS} overcurrent monitors as shown in 图 24.

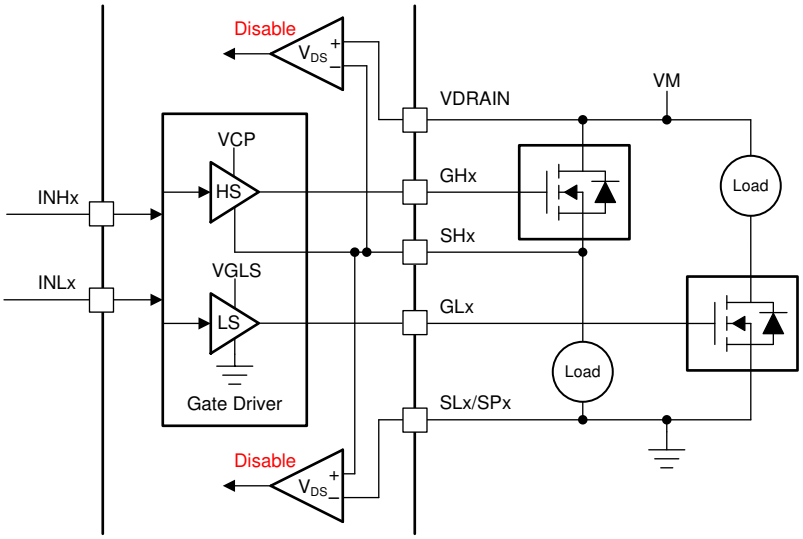

图 24. Independent PWM High-Side and Low-Side Drivers

If the half-bridge is used to implement only a high-side or low-side driver, using the V_{DS} overcurrent monitors is still possible. Connect the SHx pin as shown in 图 25 or 图 26. The unused gate driver and the corresponding input can be left disconnected.

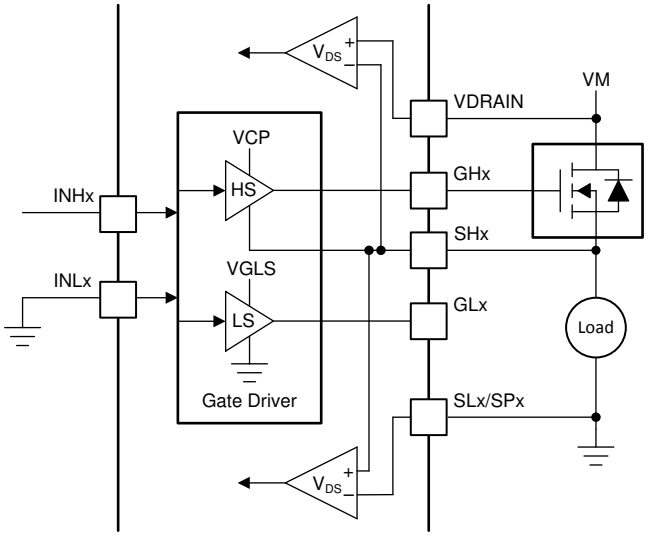

图 25. Single High-Side Driver

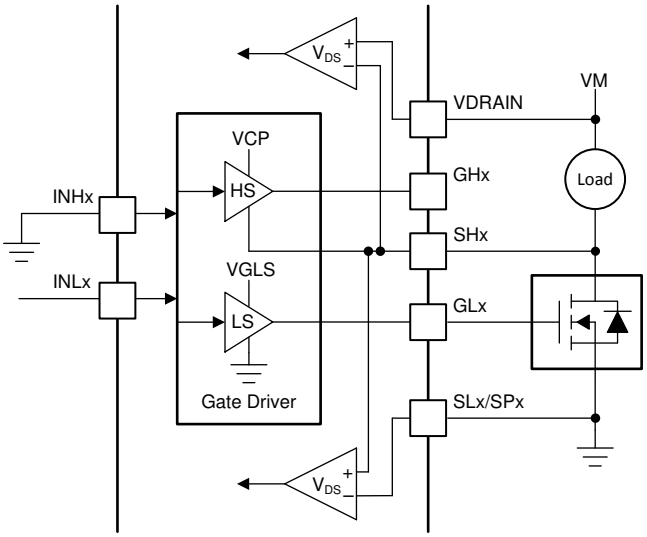

图 26. Single Low-Side Driver

版权 © 2018–2019, Texas Instruments Incorporated

8.3.1.2 Device Interface Modes

The DRV835x family of devices support two different interface modes (SPI and hardware) to allow the end application to design for either flexibility or simplicity. The two interface modes share the same four pins, allowing the different versions to be pin to pin compatible. This allows for application designers to evaluate with one interface version and potentially switch to another with minimal modifications to their design.

8.3.1.2.1 Serial Peripheral Interface (SPI)

The SPI devices support a serial communication bus that allows for an external controller to send and receive data with the DRV835x. This allows for the external controller to configure device settings and read detailed fault information. The interface is a four wire interface utilizing the SCLK, SDI, SDO, and nSCS pins.

- The SCLK pin is an input which accepts a clock signal to determine when data is captured and propagated on SDI and SDO.
- The SDI pin is the data input.
- The SDO pin is the data output. The SDO pin uses an open-drain structure and requires an external pullup resistor.
- The nSCS pin is the chip select input. A logic low signal on this pin enables SPI communication with the DRV835x.

For more information on the SPI, see the *SPI Communication* section.

8.3.1.2.2 Hardware Interface

Hardware interface devices convert the four SPI pins into four resistor configurable inputs, GAIN, IDRIVE, MODE, and VDS. This allows for the application designer to configure the most commonly used device settings by tying the pin logic high or logic low, or with a simple pullup or pulldown resistor. This removes the requirement for an SPI bus from the external controller. General fault information can still be obtained through the nFAULT pin.

- The GAIN pin configures the current shunt amplifier gain.
- The IDRIVE pin configures the gate drive current strength.
- The MODE pin configures the PWM control mode.
- The VDS pin configures the voltage threshold of the V_{DS} overcurrent monitors.

For more information on the hardware interface, see the *Pin Diagrams* section.

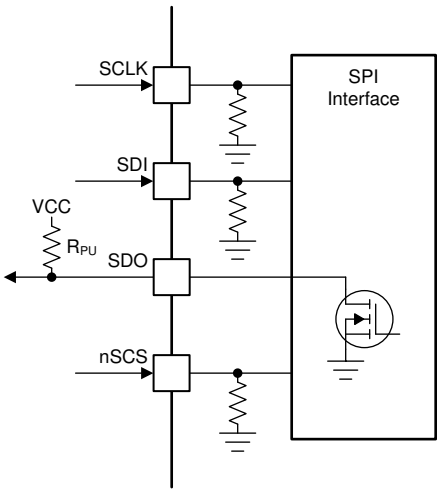

图 27. SPI

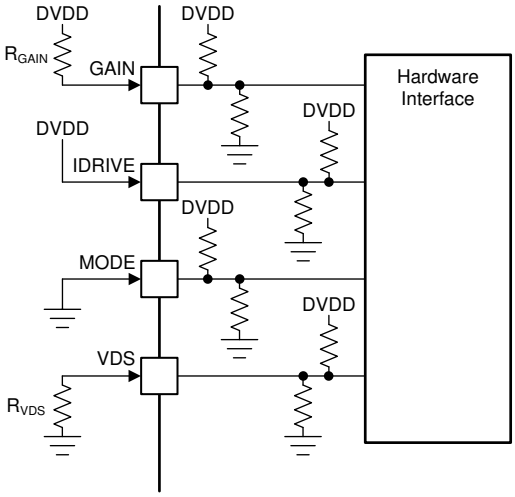

图 28. Hardware Interface

8.3.1.3 Gate Driver Voltage Supplies and Input Supply Configurations

The high-side gate-drive voltage supply is created using a doubler charge pump that operates from the VM and VDRAIN voltage supply inputs. The charge pump allows the gate driver to correctly bias the high-side MOSFET gate with respect to the source across a wide input supply voltage range. The charge pump is regulated to keep a fixed output voltage of V_{VDRAIN} + 10.5 V and supports an average output current of 25 mA. When V_{VM} is less than 12 V, the charge pump operates in full doubler mode and generates $V_{VCP} = 2 \times V_{VM} - 1.5$ V with respect to V_{VDRAIN} when unloaded. The charge pump is continuously monitored for undervoltage to prevent under-driven MOSFET conditions.

The charge pump requires a X5R or X7R, 1-µF, 16-V ceramic capacitor between the VDRAIN and VCP pins to act as the storage capacitor. Additionally, a X5R or X7R, 47-nF, VDRAIN-rated ceramic capacitor is required between the CPH and CPL pins to act as the flying capacitor.

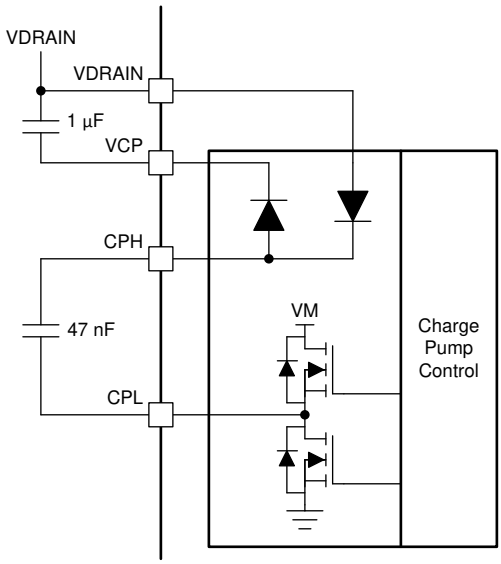

图 29. Charge Pump Architecture

The low-side gate drive voltage is created using a linear regulator that operates from the VM voltage supply input. The VGLS linear regulator allows the gate driver to correctly bias the low-side MOSFET gate with respect to ground. The VGLS linear regulator output is fixed at 14.5 V and further regulated to 11-V on the GLx outputs during operation. The VGLS regulator supports an output current of 25 mA. The VGLS linear regulator is monitored for undervoltage to prevent under driver MOSFET conditions. The VGLS linear regulator requires a X5R or X7R, 1-µF, 16-V ceramic capacitor between VGLS and GND.

Since the charge pump output is regulated to V_{VDRAIN} + 10.5 V this allows for VM to be supplied either directly from the high voltage motor supply (up to 75 V) to support a single supply system or from a low voltage gate driver power supply derived from a switching or linear regulator to improve the device efficiency or utilize an externally available power supply. On the DRV8350R and DRV8353R devices the integrated buck regulator can be used to create the efficient low voltage supply for VM without the need for an additional regulator. 图 30 and 图 31 show examples of the DRV835x configured in either single supply or dual supply configuration.

版权 © 2018–2019, Texas Instruments Incorporated

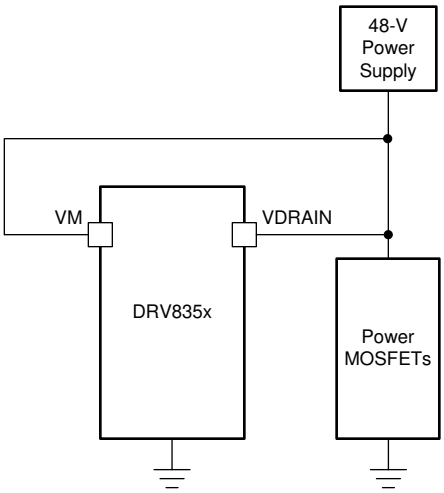

图 30. Single Supply Example

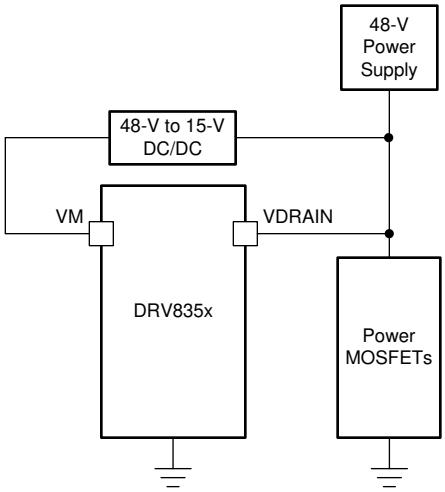

图 31. Dual Supply Example

8.3.1.4 Smart Gate Drive Architecture

The DRV835x gate drivers use an adjustable, complimentary, push-pull topology for both the high-side and low-side drivers. This topology allows for both a strong pullup and pulldown of the external MOSFET gates.

Additionally, the gate drivers use a smart gate-drive architecture to provide additional control of the external power MOSFETs, take additional steps to protect the MOSFETs, and allow for optimal tradeoffs between efficiency and robustness. This architecture is implemented through two components called IDRIVE and TDRIVE which are detailed in the *IDRIVE: MOSFET Slew-Rate Control* section and *TDRIVE: MOSFET Gate Drive Control* section. 图 32 shows the high-level functional block diagram of the gate driver.

The IDRIVE gate-drive current and TDRIVE gate-drive time should be initially selected based on the parameters of the external power MOSFET used in the system and the desired rise and fall times (see the *Application and Implementation* section).

The high-side gate driver also implements a Zener clamp diode to help protect the external MOSFET gate from overvoltage conditions in the case of external short-circuit events on the MOSFET.

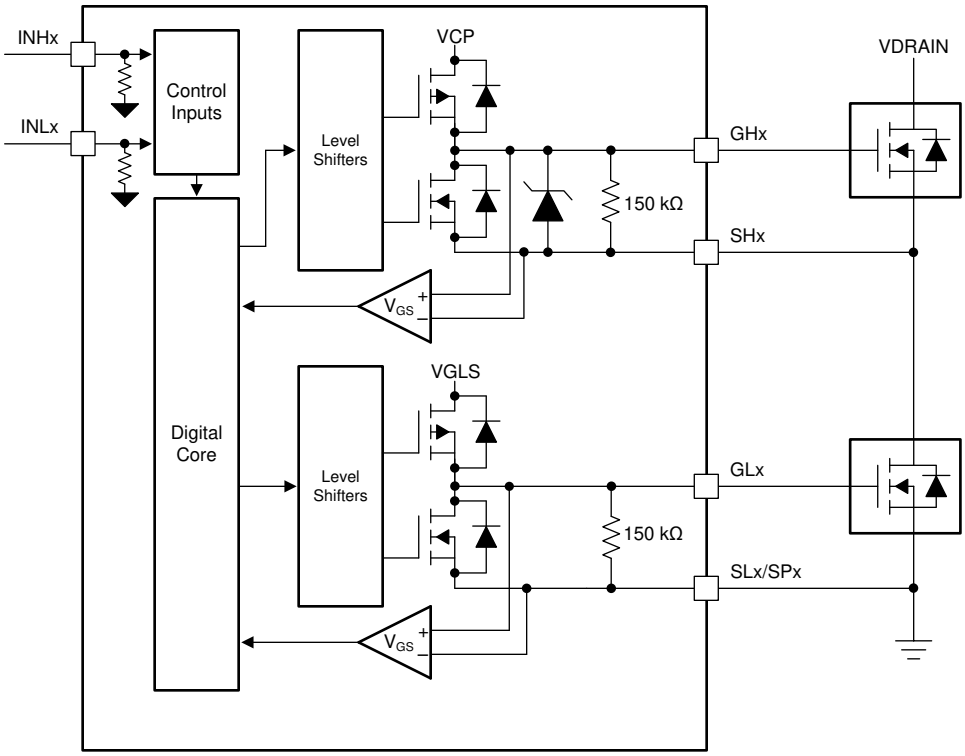

图 32. Gate Driver Block Diagram

8.3.1.4.1 IDRIVE: MOSFET Slew-Rate Control

The IDRIVE component implements adjustable gate-drive current to control the MOSFET V_{DS} slew rates. The MOSFET V_{DS} slew rates are a critical factor for optimizing radiated emissions, energy and duration of diode recovery spikes, dV/dt gate turnon leading to shoot-through, and switching voltage transients related to parasitics in the external half-bridge. IDRIVE operates on the principal that the MOSFET V_{DS} slew rates are predominately determined by the rate of gate charge (or gate current) delivered during the MOSFET Q_{GD} or Miller charging region. By allowing the gate driver to adjust the gate current, it can effectively control the slew rate of the external power MOSFETs.

IDRIVE allows the DRV835x family of devices to dynamically switch between gate drive currents either through a register setting on SPI devices or the IDRIVE pin on hardware interface devices. The SPI devices provide 16 I_{DRIVE} settings ranging between 50-mA to 1-A source and 100-mA to 2-A sink. Hardware interface devices provides 7 I_{DRIVE} settings between the same ranges. The gate drive current setting is delivered to the gate during the turnon and turnoff of the external power MOSFET for the t_{DRIVE} duration. After the MOSFET turnon or turnoff, the gate driver switches to a smaller hold I_{HOLD} current to improve the gate driver efficiency. Additional details on the IDRIVE settings are described in the *Register Maps* section for the SPI devices and in the *Pin Diagrams* section for the hardware interface devices.

8.3.1.4.2 TDRIVE: MOSFET Gate Drive Control

The TDRIVE component is an integrated gate-drive state machine that provides automatic dead time insertion through switching handshaking, parasitic dV/dt gate turnon prevention, and MOSFET gate-fault detection.

The first component of the TDRIVE state machine is automatic dead-time insertion. Dead time is period of time between the switching of the external high-side and low-side MOSFETs to make sure that they do not cross conduct and cause shoot-through. The DRV835x family of devices use V_{GS} voltage monitors to measure the MOSFET gate-to-source voltage and determine the correct time to switch instead of relying on a fixed time value. This feature allows the gate-driver dead time to adjust for variation in the system such a temperature drift and variation in the MOSFET parameters. An additional digital dead time (t_{DEAD}) can be inserted and is adjustable through the registers on SPI devices.

版权 © 2018–2019, Texas Instruments Incorporated

The automatic dead-time insertion has a limitation when the gate driver is transitioning from high-side MOSFET on to low-side MOSFET on when the phase current is coming into the external half-bridge. In this case, the high-side diode will conduct during the dead-time and hold up the switch-node voltage to VDRAIN. In this case, an additional delay of approximately 100-200 ns is introduced into the dead-time handshake. This is introduced due to the need to discharge the voltage present on the internal V_{GS} detection circuit.

The second component focuses on parasitic dV/dt gate turnon prevention. To implement this, the TDRIVE state machine enables a strong pulldown I_{STRONG} current on the opposite MOSFET gate whenever a MOSFET is switching. The strong pulldown last for the TDRIVE duration. This feature helps remove parasitic charge that couples into the MOSFET gate when the half-bridge switch-node voltage slews rapidly.

The third component implements a gate-fault detection scheme to detect pin-to-pin solder defects, a MOSFET gate failure, or a MOSFET gate stuck-high or stuck-low voltage condition. This implementation is done with a pair of V_{GS} gate-to-source voltage monitors for each half-bridge gate driver. When the gate driver receives a command to change the state of the half-bridge it starts to monitor the gate voltage of the external MOSFET. If at the end of the t_{DRIVE} period the V_{GS} voltage has not reached the correct threshold the gate driver will report a fault. To make sure that a false fault is not detected, a t_{DRIVE} time should be selected that is longer than the time required to charge or discharge the MOSFET gate. The t_{DRIVE} time does not increase the PWM time and will terminate if another PWM command is received while active. Additional details on the TDRIVE settings are described in the *Register Maps* section for SPI devices and in the *Pin Diagrams* section for hardware interface devices.

图 33 shows an example of the TDRIVE state machine in operation.

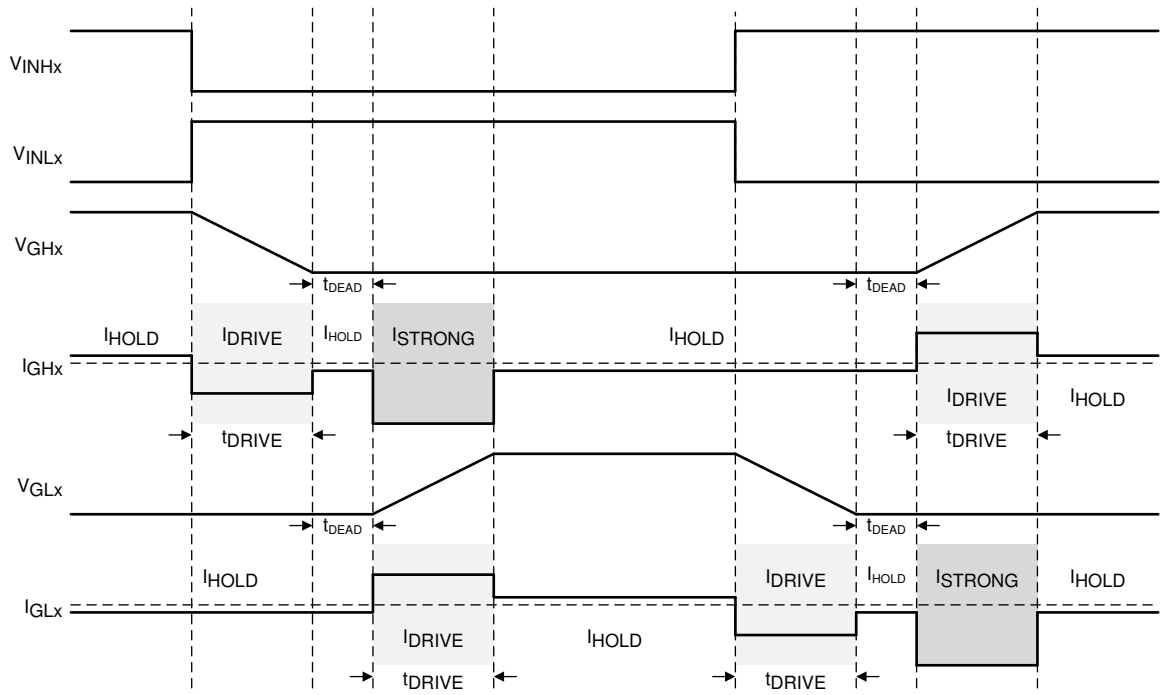

图 33. TDRIVE State Machine

8.3.1.4.3 Propagation Delay

The propagation delay time (t_{pd}) is measured as the time between an input logic edge to a detected output change. This time has three parts consisting of the digital input deglitcher delay, the digital propagation delay, and the delay through the analog gate drivers.

The input deglitcher prevents high-frequency noise on the input pins from affecting the output state of the gate drivers. To support multiple control modes and dead time insertion, a small digital delay is added as the input command propagates through the device. Lastly, the analog gate drivers have a small delay that contributes to the overall propagation delay of the device.

8.3.1.4.4 MOSFET V_{DS} Monitors

The gate drivers implement adjustable V_{DS} voltage monitors to detect overcurrent or short-circuit conditions on the external power MOSFETs. When the monitored voltage is greater than the V_{DS} trip point (V_{VDS_OCP}) for longer than the deglitch time (t_{OCP}), an overcurrent condition is detected and action is taken according to the device V_{DS} fault mode.

The high-side V_{DS} monitors measure the voltage between the VDRAIN and SHx pins. In devices with three current-shunt amplifiers (DRV8353 and DRV8353R), the low-side V_{DS} monitors measure the voltage between the SHx and SPx pins. If the current shunt amplifier is unused, tie the SP pins to the common ground point of the external half-bridges. On device options without the current shunt amplifiers (DRV8350 and DRV8350R) the low-side V_{DS} monitor measures between the SHx and SLx pins.

For the SPI devices, the low-side V_{DS} monitor reference point can be changed between the SPx and SNx pins if desired with the LS_REF register setting. This is only for the low-side V_{DS} monitor. The high-side V_{DS} monitor stays between the VDRAIN and SHx pins.

The V_{VDS_OCP} threshold is programmable between 0.06 V and 2 V on SPI device and between 0.06 V and 1 V on hardware interface devices. Additional information on the V_{DS} monitor levels are described in the *Register Maps* section for SPI devices and in the *Pin Diagrams* section hardware interface device.

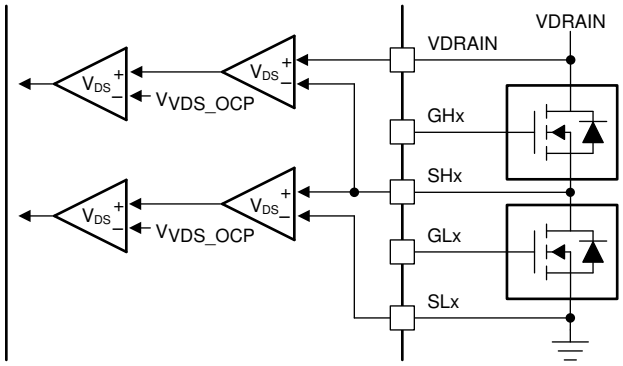

图 34. DRV8350 and DRV8350R V_{DS} Monitors

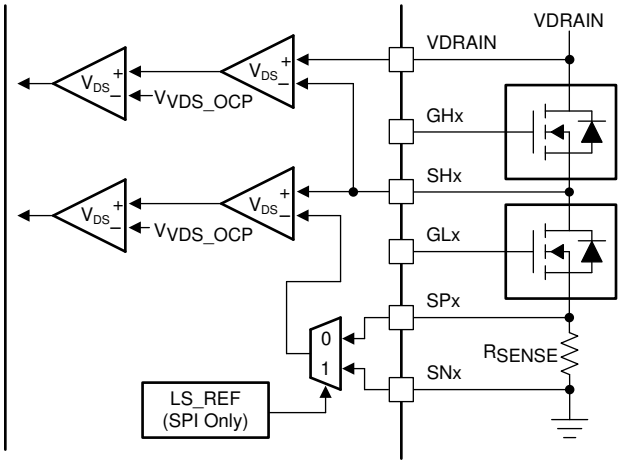

图 35. DRV8353 and DRV8353R V_{DS} Monitors

8.3.1.4.5 VDRAIN Sense and Reference Pin

The DRV835x family of devices provides a separate sense and reference pin for the common point of the high-side MOSFET drain. This pin is called VDRAIN. This pin allows the sense line for the overcurrent monitors (VDRAIN) and the power supply (VM) to stay separate and prevent noise on the VDRAIN sense line.

The VDRAIN pin serves as the reference point for the integrated charge pump. This makes sure that the charge pump reference stays with respect to the power MOSFET supply through voltage transient conditions.

Since the charge pump is referenced to VDRAIN, this also allows for VM to supplied either directed from the power MOSFET supply (VDRAIN) or from an independent supply. This allows for a configuration where VM can be supplied from an efficient low voltage supply to increase the device efficiency. On the DRV8350R and DRV8353R devices, the integrated buck regulator can be used to create the efficient low voltage supply.

8.3.2 DVDD Linear Voltage Regulator

A 5-V, 10-mA linear regulator is integrated into the DRV835x family of devices and is available for use by external circuitry. This regulator can provide the supply voltage for low-current supporting circuitry. The output of the DVDD regulator should be bypassed near the DVDD pin with a X5R or X7R, 1-µF, 6.3-V ceramic capacitor routed directly back to the adjacent DGND or GND ground pin.

The DVDD nominal, no-load output voltage is 5 V. When the DVDD load current exceeds 10 mA, the regulator functions like a constant-current source. The output voltage drops significantly with a current load greater than 10 mA.

版权 © 2018–2019, Texas Instruments Incorporated

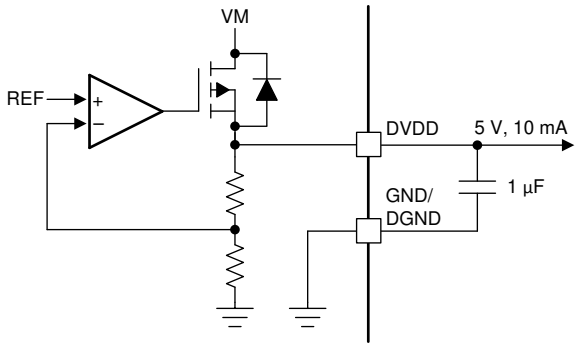

图 36. DVDD Linear Regulator Block Diagram

Use 公式 1 to calculate the power dissipated in the device because of the DVDD linear regulator.

$$P = (V_{VM} - V_{DVDD}) \times I_{DVDD} \tag{1}$$

For example, at V_{VM} = 24 V, drawing 20 mA out of DVDD results in a power dissipation as shown in 公式 2.

$$P = (24\ V - 3.3\ V) \times 20\ mA = 414\ mW \tag{2}$$

8.3.3 Pin Diagrams

图 37 shows the input structure for the logic-level pins, INHx, INLx, ENABLE, nSCS, SCLK, and SDI.

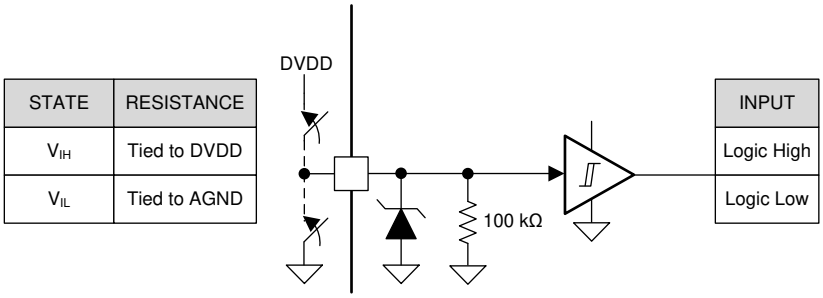

STATE	RESISTANCE
V_{IH}	Tied to DVDD
V_{IL}	Tied to AGND

INPUT
Logic High
Logic Low

图 37. Logic-Level Input Pin Structure

图 38 shows the structure of the four level input pins, MODE and GAIN, on hardware interface devices. The input can be set with an external resistor.

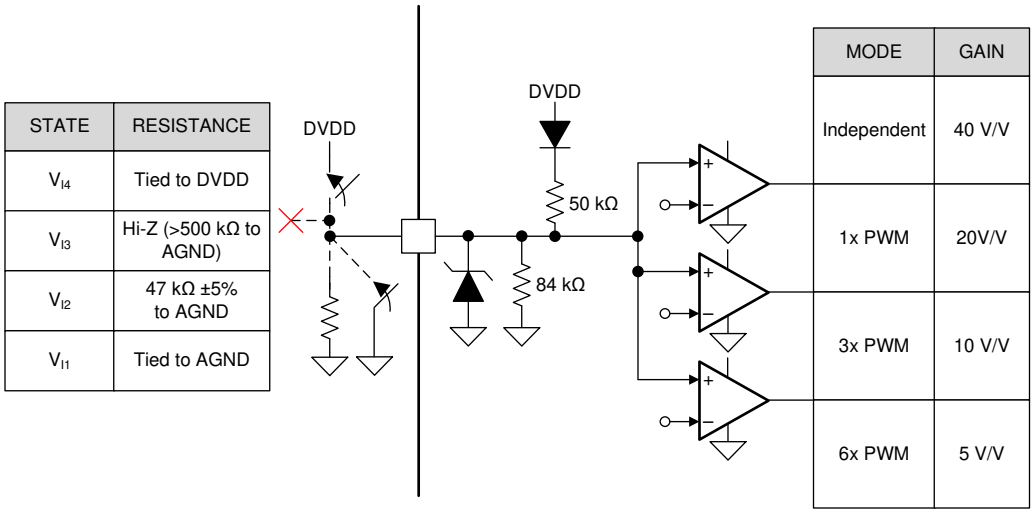

图 38. Four Level Input Pin Structure

图 39 shows the structure of the seven level input pins, IDRIVE and VDS, on hardware interface devices. The input can be set with an external resistor.

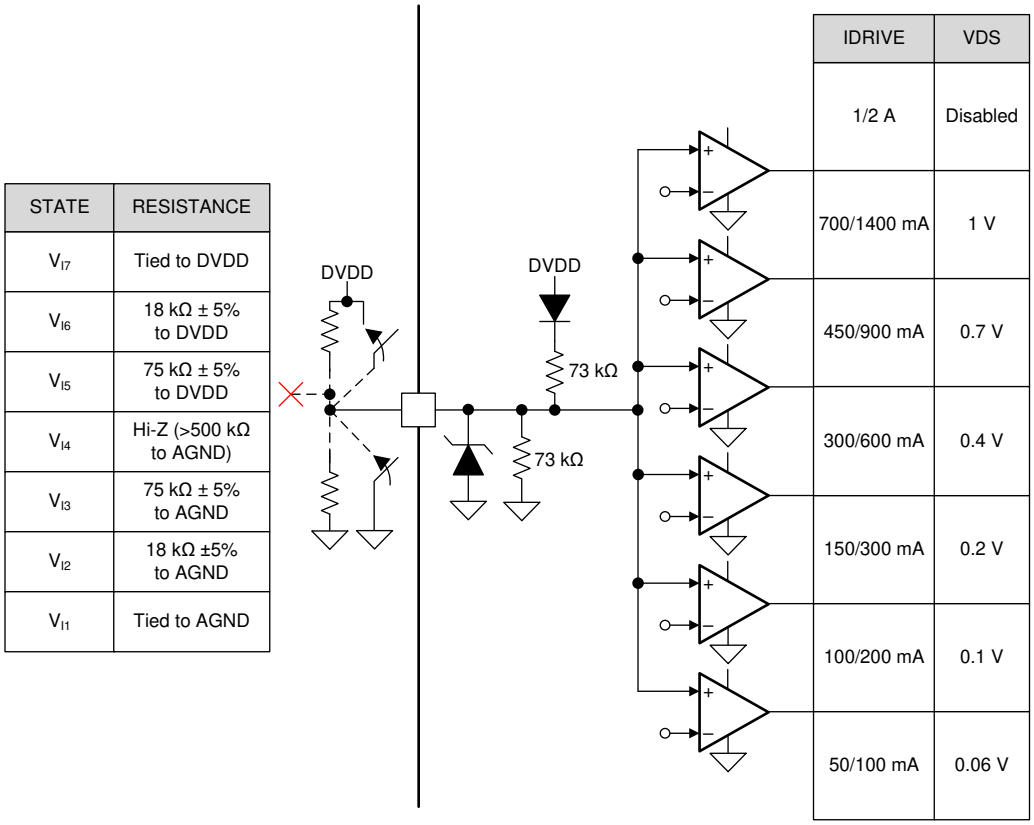

图 39. Seven Level Input Pin Structure

版权 © 2018–2019, Texas Instruments Incorporated

图 40 shows the structure of the open-drain output pins nFAULT and SDO. The open-drain output requires an external pullup resistor to function correctly.

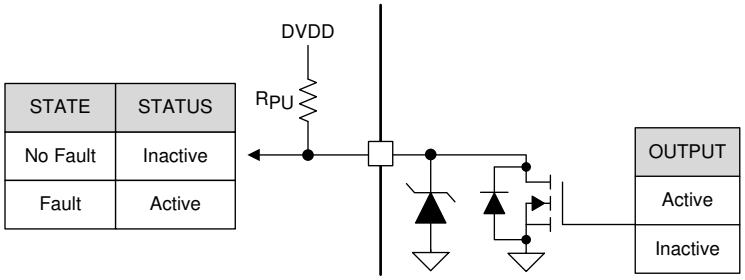

图 40. Open-Drain Output Pin Structure

8.3.4 Low-Side Current-Shunt Amplifiers (DRV8353 and DRV8353R Only)

The DRV8353 and DRV8353R integrate three, high-performance low-side current-shunt amplifiers for current measurements using low-side shunt resistors in the external half-bridges. Low-side current measurements are commonly used to implement overcurrent protection, external torque control, or brushless DC commutation with the external controller. All three amplifiers can be used to sense the current in each of the half-bridge legs or one amplifier can be used to sense the sum of the half-bridge legs. The current shunt amplifiers include features such as programmable gain, offset calibration, unidirectional and bidirectional support, and a voltage reference pin (VREF).

8.3.4.1 Bidirectional Current Sense Operation

The SOx pin on the DRV8353 and DRV8353R outputs an analog voltage equal to the voltage across the SPx and SNx pins multiplied by the gain setting (G_{CSA}). The gain setting is adjustable between four different levels (5 V/V, 10 V/V, 20 V/V, and 40 V/V). Use 公式 3 to calculate the current through the shunt resistor.

$$I = \frac{\frac{V_{VREF}}{2} - V_{SOx}}{G_{CSA} \times R_{SENSE}} \tag{3}$$

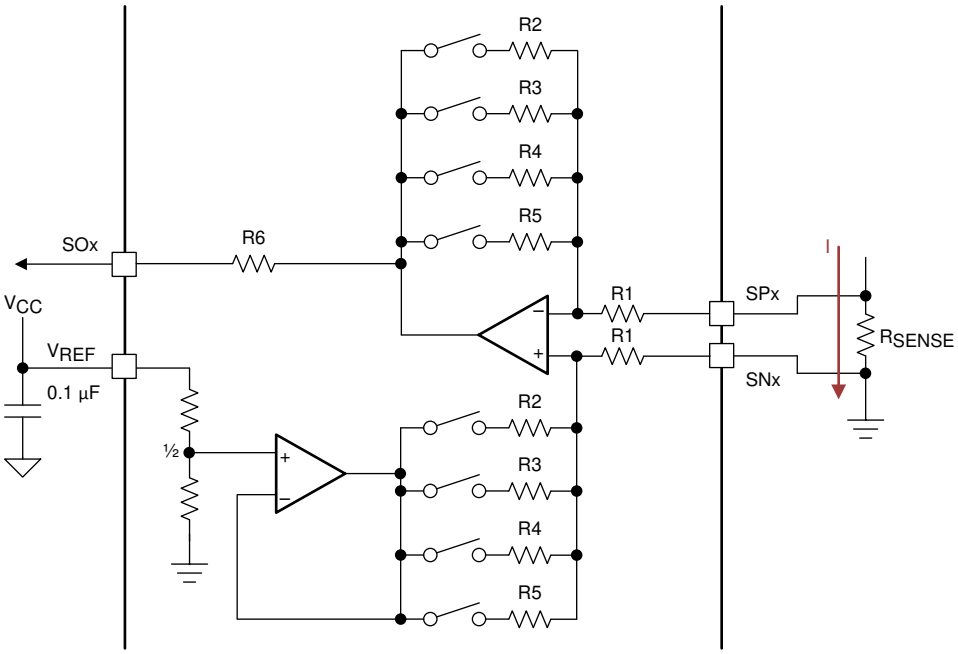

图 41. Bidirectional Current-Sense Configuration

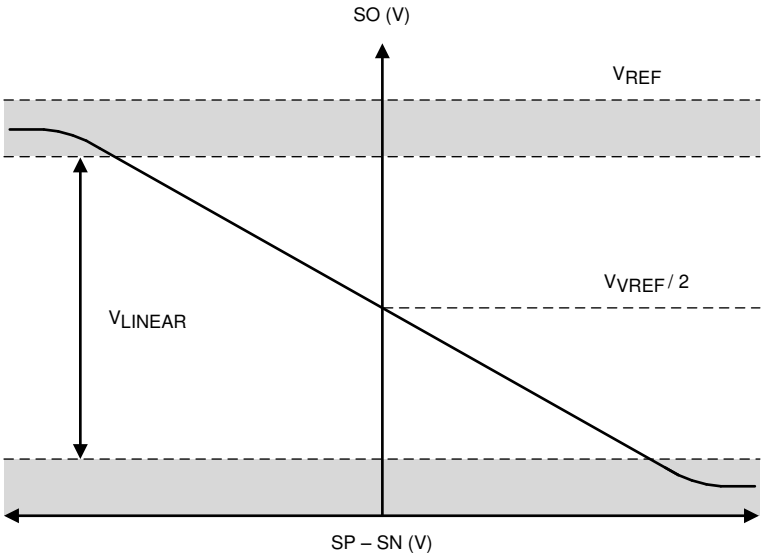

图 42. Bidirectional Current-Sense Output

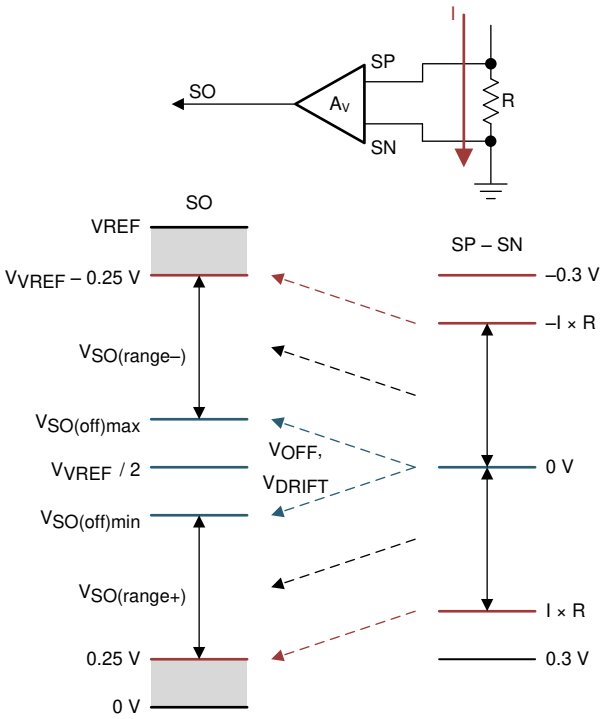

图 43. Bidirectional Current Sense Regions

版权 © 2018–2019, Texas Instruments Incorporated

8.3.4.2 Unidirectional Current Sense Operation (SPI only)

On the DRV8353 and DRV8353R SPI devices, use the VREF_DIV bit to remove the VREF divider. In this case the shunt amplifier operates unidirectionally and SOx outputs an analog voltage equal to the voltage across the SPx and SNx pins multiplied by the gain setting (G_{CSA}). Use 公式 4 to calculate the current through the shunt resistor.

$$I = \frac{V_{VREF} - V_{SOx}}{G_{CSA} \times R_{SENSE}} \tag{4}$$

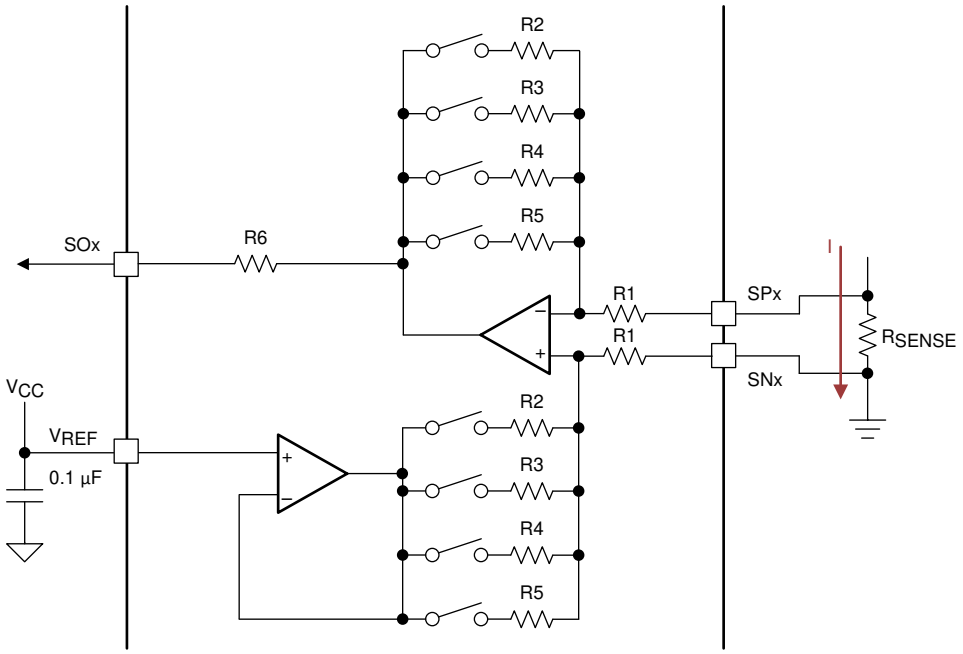

图 44. Unidirectional Current-Sense Configuration

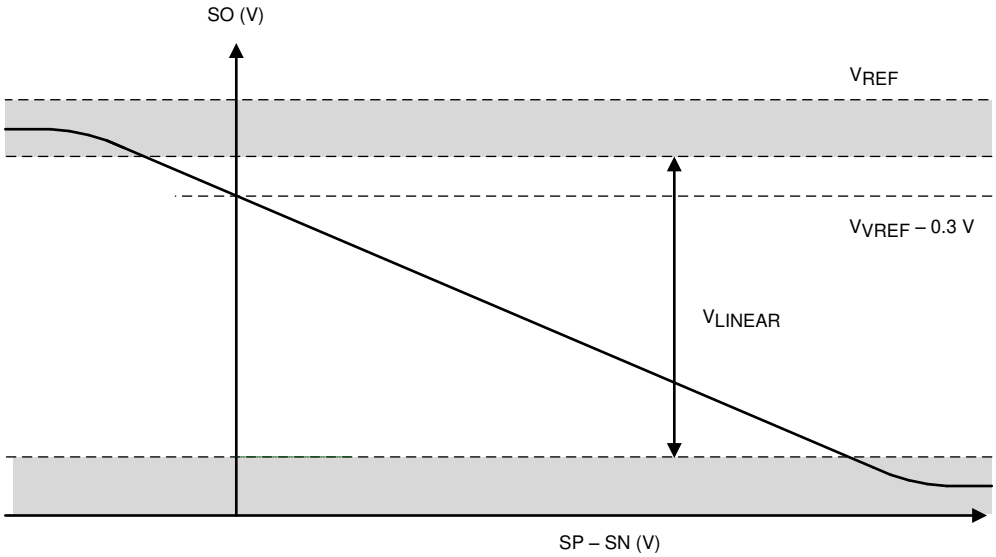

图 45. Unidirectional Current-Sense Output

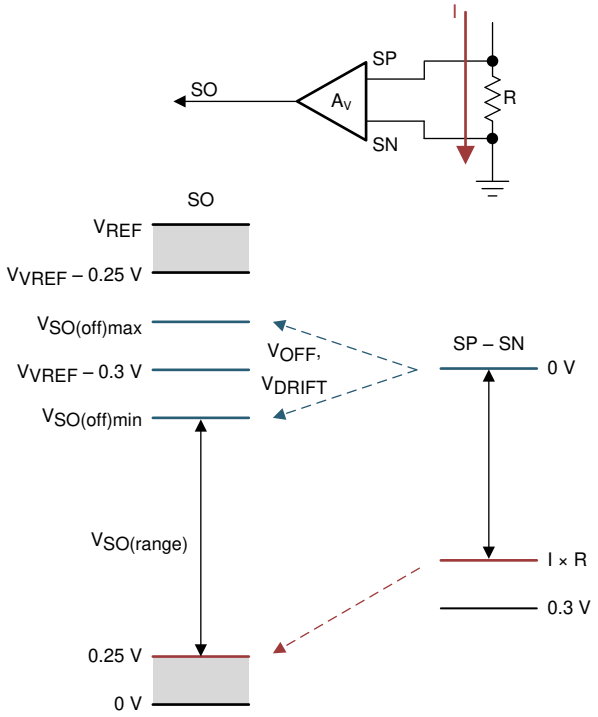

图 46. Unidirectional Current-Sense Regions

8.3.4.3 Amplifier Calibration Modes

To minimize DC offset and drift over temperature, a DC calibration mode is provided and enabled through the SPI register (CSA_CAL_X). This option is not available on hardware interface devices. When the calibration setting is enabled the inputs to the amplifier are shorted and the load is disconnected. DC calibration can be done at any time, even when the half-bridges are operating. For the best results, do the DC calibration during the switching OFF period to decrease the potential noise impact to the amplifier. A diagram of the calibration mode is shown below. When a CSA_CAL_X bit is enabled, the corresponding amplifier goes to the calibration mode.

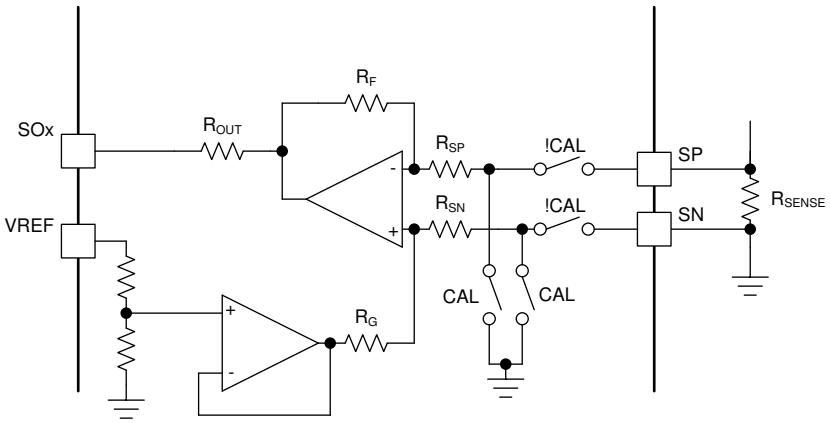

图 47. Amplifier Manual Calibration

In addition to the manual calibration method provided on the SPI devices versions, the DRV835x family of devices provide an auto calibration feature on both the hardware and SPI device versions in order to minimize the amplifier input offset after power up and during run time to account for temperature and device variation.

版权 © 2018–2019, Texas Instruments Incorporated

Auto calibration occurs automatically on device power up for both the hardware and SPI device options. The power up auto calibration starts immediately after the VREF pin crosses the minimum operational VREF voltage. 50 us should be allowed for the power up auto calibration routine to complete after the VREF pin voltage crosses the minimum VREF operational voltage. The auto calibration functions by doing a trim routine of the amplifier to minimize the amplifier input offset. After this the amplifiers are ready for normal operation.

For the SPI device options, auto calibration can also be done again during run time by enabling the AUTO_CAL register setting. Auto calibration can then be commanded with the corresponding CSA_CAL_X register setting to rerun the auto calibration routine. During auto calibration all of the amplifiers will be configured for the max gain setting in order to improve the accuracy of the calibration routine.

8.3.4.4 MOSFET V_{DS} Sense Mode (SPI Only)

The current-sense amplifiers on the DRV8353 and DRV8353R SPI devices can be configured to amplify the voltage across the external low-side MOSFET V_{DS}. This allows for the external controller to measure the voltage drop across the MOSFET $R_{DS(on)}$ without the shunt resistor and then calculate the half-bridge current level.

To enable this mode set the CSA_FET bit to 1. The positive input of the amplifier is then internally connected to the SHx pin with an internal clamp to prevent high voltage on the SHx pin from damaging the sense amplifier inputs. During this mode of operation, the SPx pins should stay connected to the source of the low-side MOSFET as it serves as the reference for the low-side gate driver. When the CSA_FET bit is set to 1, the negative reference for the low-side V_{DS} monitor is automatically set to SNx, regardless of the state of the LS_REF bit state. This setting is implemented to prevent disabling of the low-side V_{DS} monitor.

If the system operates in MOSFET V_{DS} sensing mode, route the SHx and SNx pins with Kelvin connections across the drain and source of the external low-side MOSFETs.

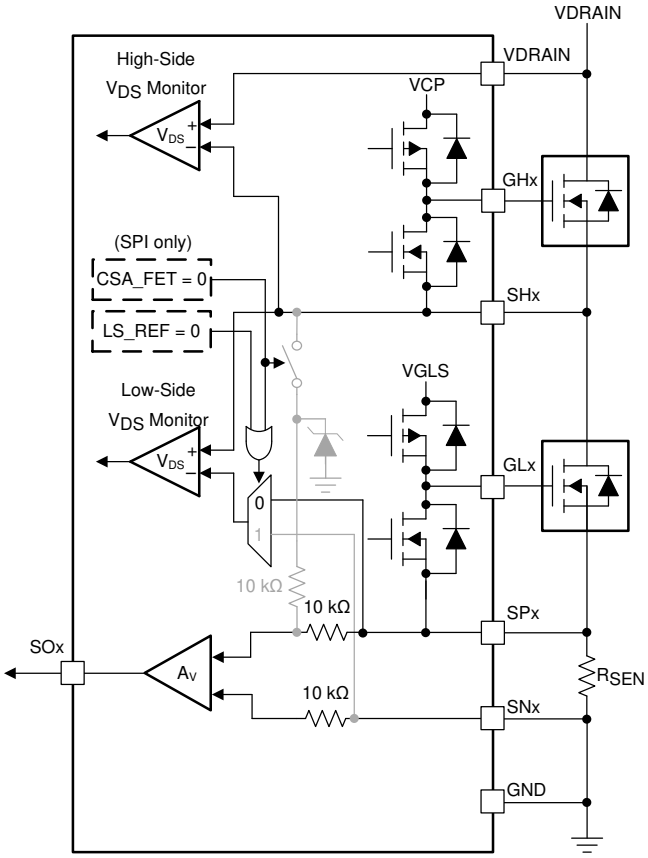

图 48. Resistor Sense Configuration

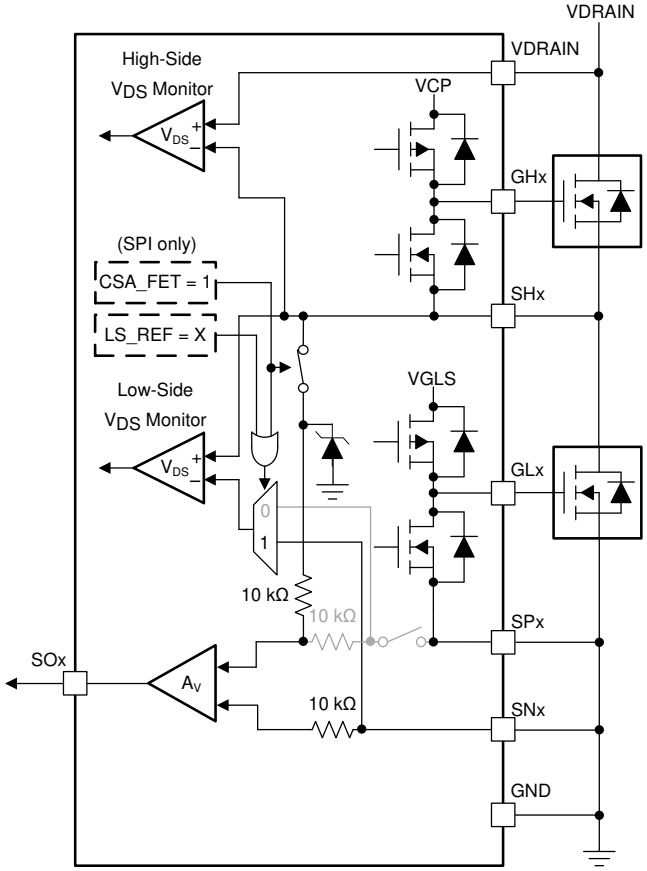

图 49. V_{DS} Sense Configuration

When operating in MOSFET V_{DS} sense mode, the amplifier is enabled at the end of the t_{DRIVE} time. At this time, the amplifier input is connected to the SHx pin, and the SOx output is valid. When the low-side MOSFET receives a signal to turn off, the amplifier inputs, SPx and SNx, are shorted together internally.

8.3.5 Step-Down Buck Regulator

The DRV8350R and DRV8353R have an integrated buck regulator (LM5008A) to supply power for an external controller or system voltage rail.

The LM5008A regulator is an easy-to-use buck (step-down) DC-DC regulator that operates from 6-V to 95-V supply voltage. The device is intended for step-down conversions from 12-V, 24-V, and 48-V unregulated, semi-regulated and fully-regulated supply rails. With integrated buck power MOSFET, the LM5008A delivers up to 350-mA DC load current with exceptional efficiency and low input quiescent current in a very small solution size.

Designed for simple implementation, an almost fixed-frequency, constant on-time (COT) operation with discontinuous conduction mode (DCM) at light loads is ideal for low-noise, high current, fast transient load requirements. Control loop compensation is not required reducing design time and external component count.

The LM5008A incorporates other features for comprehensive system requirements, including VCC undervoltage lockout (UVLO), gate drive undervoltage lockout, maximum duty cycle limiter, intelligent current limit off-timer, a precharge switch, and thermal shutdown with automatic recovery. These features enable a flexible and easy-to-use platform for a wide range of applications. The pin arrangement is designed for simple and optimized PCB layout, requiring only a few external components.

For additional details and design information refer to the *LM5008A 100-V 350-mA Constant On-Time Buck Switching Regulator* data sheet.

8.3.5.1 Functional Block Diagram

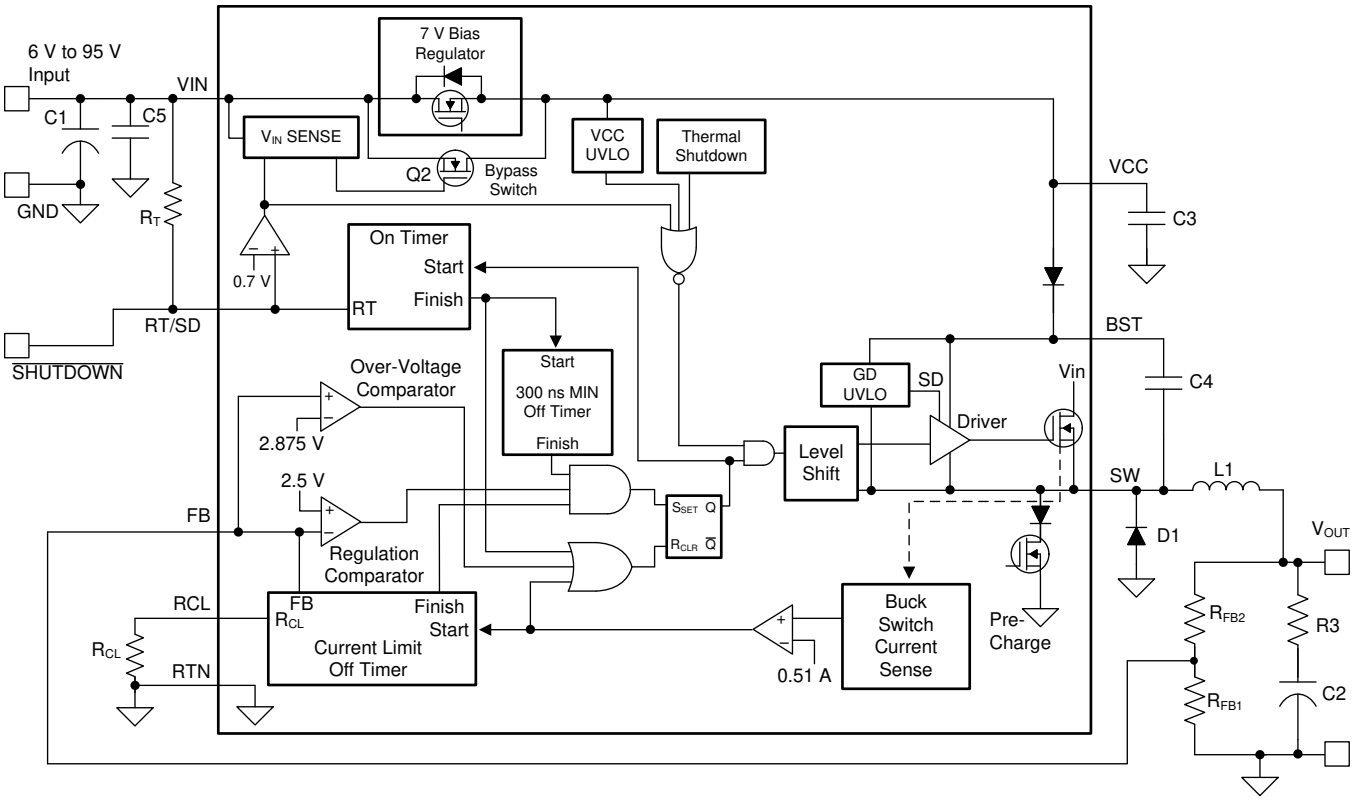

图 50. Functional Block Diagram

版权 © 2018–2019, Texas Instruments Incorporated

8.3.5.2 Feature Description

8.3.5.2.1 Control Circuit Overview

The LM5008A is a Buck DC-DC regulator that uses a control scheme in which the on-time varies inversely with line voltage (V_{IN}). Control is based on a comparator and the on-time one-shot, with the output voltage feedback (FB) compared to an internal reference (2.5 V). If the FB level is below the reference the buck switch is turned on for a fixed time determined by the line voltage and a programming resistor (R_T). Following the ON period, the switch stays off for at least the minimum off-timer period of 300 ns. If FB is still below the reference at that time, the switch turns on again for another on-time period. This continues until regulation is achieved.

The LM5008A operates in discontinuous conduction mode at light load currents, and continuous conduction mode at heavy load current. In discontinuous conduction mode, current through the output inductor starts at zero and ramps up to a peak during the on-time, then ramps back to zero before the end of the off-time. The next on-time period starts when the voltage at FB falls below the internal reference; until then, the inductor current stays zero. In this mode, the operating frequency is lower than in continuous conduction mode and varies with load current. Therefore, at light loads, the conversion efficiency is kept because the switching losses decrease with the reduction in load and frequency. The discontinuous operating frequency can be calculated with 公式 5.

$$F = \left(\frac{V_{OUT}^2 \times L \times 1.04 \times 10^{20}}{R_L \times (R_T)^2} \right)$$

where

- R_L = the load resistance (5)

In continuous conduction mode, current flows continuously through the inductor and never ramps down to zero. In this mode the operating frequency is greater than the discontinuous mode frequency and stays relatively constant with load and line variations. The approximate continuous mode operating frequency can be calculated with 公式 6.

$$F = \left(\frac{V_{OUT}}{1.385 \times 10^{-10} \times R_T} \right) \quad (6)$$

The output voltage (V_{OUT}) is programmed by two external resistors as shown in 图 50. The regulation point can be calculated with 公式 7.

$$V_{OUT} = 2.5 \times (R_{FB1} + R_{FB2}) / R_{FB1} \quad (7)$$

The LM5008A regulates the output voltage based on ripple voltage at the feedback input, requiring a minimum amount of ESR for the output capacitor C2. A minimum of 25 mV to 50 mV of ripple voltage at the feedback pin (FB) is required for the LM5008A. In cases where the capacitor ESR is too small, additional series resistance may be required (R3 in the *图 50*).

For applications where lower output voltage ripple is required, the output can be taken directly from a low-ESR output capacitor as shown in 图 51. However, R3 slightly degrades the load regulation.

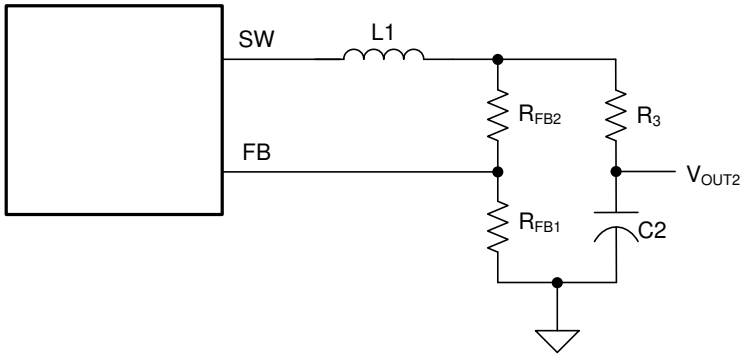

图 51. Low-Ripple Output Configuration

8.3.5.2.2 Start-Up Regulator (V_{CC})

The high voltage bias regulator is integrated within the LM5008A. The input pin (VIN) can be connected directly to line voltages between 6 V and 95 V, with transient capability to 100 V. Referring to the *图 50*, when V_{IN} is between 6 V and the bypass threshold (nominally 8.5 V), the bypass switch (Q2) is on, and V_{CC} tracks V_{IN} within 100 mV to 150 mV. The bypass switch on-resistance is approximately 100 Ω, with inherent current limiting at approximately 100 mA. When V_{IN} is above the bypass threshold Q2 is turned off, and V_{CC} is regulated at 7 V. The V_{CC} regulator output current is limited at approximately 9.2 mA. When the LM5008A is shut down using the RT/SD pin, the V_{CC} bypass switch is shut off regardless of the voltage at V_{IN}.

When VIN exceeds the bypass threshold, the time required for Q2 to shut off is approximately 2 µs to 3 µs. The capacitor at VCC (C3) must be a minimum of 0.47 µF to prevent the voltage at V_{CC} from rising above its absolute maximum rating in response to a step input applied at V_{IN}. C3 must be placed as near as possible to the VCC and RTN pins. In applications with a relatively high input voltage, power dissipation in the bias regulator is a concern. An auxiliary voltage of between 7.5 V and 14 V can be diode connected to the VCC pin to shut off the V_{CC} regulator, thereby reducing internal power dissipation. The current required into the VCC pin is shown in the typical characteristics curves. Internally a diode connects VCC to VIN requiring that the auxiliary voltage be less than V_{IN}.

The turnon sequence is shown in 图 52. During the initial delay (t1), VCC ramps up at a rate determined by its current limit and C3 while internal circuitry stabilizes. When V_{CC} reaches the upper threshold of its undervoltage lockout (UVLO, typically 5.3 V), the buck switch is enabled. The inductor current increases to the current limit threshold (I_{LIM}), and during t2 the V_{OUT} increases as the output capacitor charges up. When V_{OUT} reaches the intended voltage the average inductor current decreases (t3) to the nominal load current (I_O).

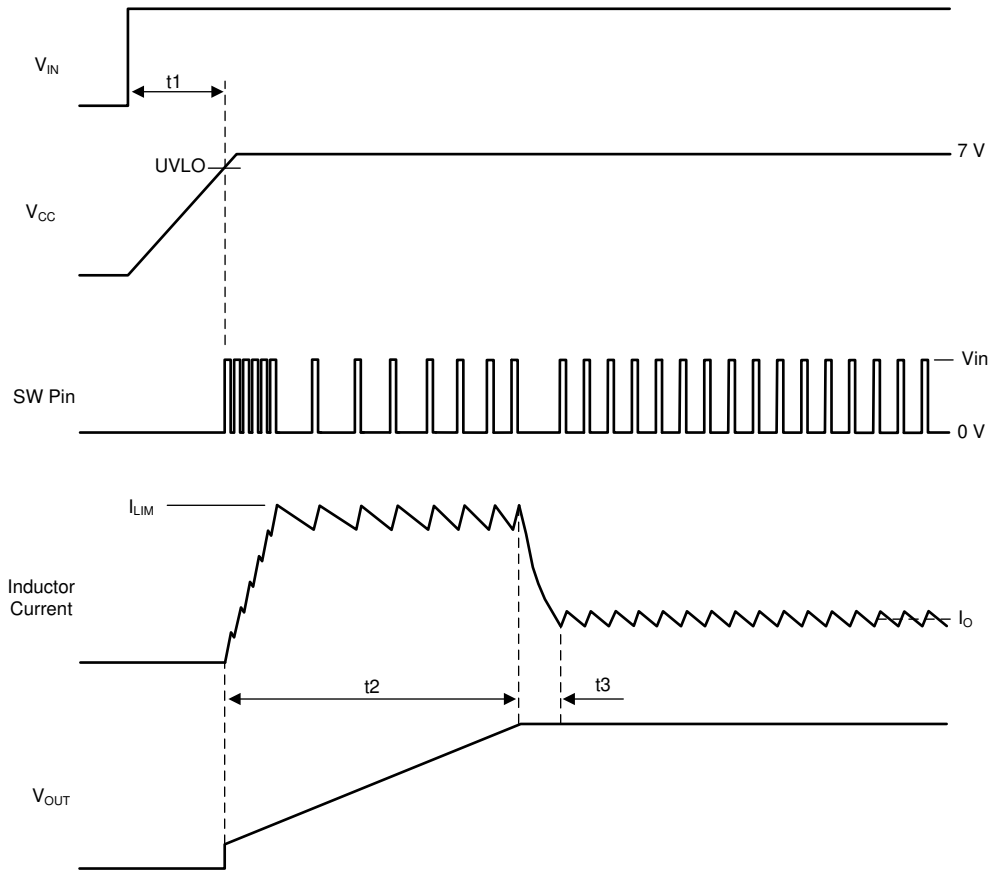

图 52. Start-Up Sequence

版权 © 2018–2019, Texas Instruments Incorporated

8.3.5.2.3 Regulation Comparator

The feedback voltage at FB is compared to an internal 2.5-V reference. In normal operation (the output voltage is regulated), an on-time period is initiated when the voltage at FB falls below 2.5 V. The buck switch stays on for the on-time, causing the FB voltage to rise above 2.5 V. After the on-time period, the buck switch stays off until the FB voltage again falls below 2.5 V. During start-up, the FB voltage is below 2.5 V at the end of each on-time, resulting in the minimum off-time of 300 ns. Bias current at the FB pin is nominally 100 nA.

8.3.5.2.4 Overvoltage Comparator

The feedback voltage at FB is compared to an internal 2.875-V reference. If the voltage at FB rises above 2.875 V, the on-time pulse is immediately terminated. This condition can occur if the input voltage or the output load change suddenly. The buck switch does not turn on again until the voltage at FB falls below 2.5 V.

8.3.5.2.5 On-Time Generator and Shutdown

The on-time for the LM5008A is determined by the R_T resistor and is inversely proportional to the input voltage (V_{IN}), resulting in an almost constant frequency as Vin is varied over its range. The on-time equation for the LM5008A is 公式 8.

$$T_{ON} = 1.385 \times 10^{-10} \times R_T / V_{IN} \tag{8}$$

R_T must be selected for a minimum on-time (at maximum V_{IN}) greater than 400 ns, for correct current limit operation. This requirement limits the maximum frequency for each application, depending on V_{IN} and V_{OUT}.

The LM5008A can be remotely disabled by taking the R_T/SD pin to ground. See 图 53. The voltage at the R_T/SD pin is between 1.5 V and 3 V, depending on V_{IN} and the value of the R_T resistor.

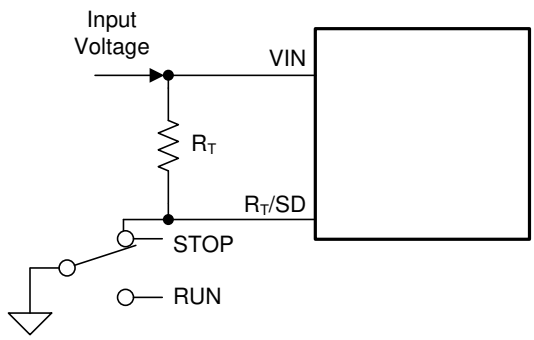

图 53. Shutdown Implementation

8.3.5.2.6 Current Limit

The LM5008A has an intelligent current limit OFF timer. If the current in the Buck switch exceeds 0.51 A the present cycle is immediately terminated and a non-resetable OFF timer is initiated. The length of off-time is controlled by an external resistor (R_{CL}) and the FB voltage. When FB = 0 V, a maximum off-time is required, and the time is preset to 35 µs. This condition occurs when the output is shorted and during the initial part of start-up. This amount of time makes sure that safe short-circuit operation occurs up to the maximum input voltage of 95 V. In cases of overload where the FB voltage is above zero volts (not a short circuit), the current limit off-time is less than 35 µs. Reducing the off-time during less severe overloads decreases the amount of foldback, recovery time, and the start-up time. The off-time is calculated from 公式 9.

$$T_{OFF} = \left(\frac{10^{-5}}{0.285 + \frac{V_{FB}}{\left(6.35 \times 10^{-6} \times R_{CL}\right)}} \right) \tag{9}$$

The current limit-sensing circuit is blanked for the first 50 ns to 70 ns of each on-time, so it is not falsely tripped by the current surge which occurs at turnon. The current surge is required by the re-circulating diode (D1) for its turnoff recovery.

8.3.5.2.7 N-Channel Buck Switch and Driver

The LM5008A integrates an N-Channel Buck switch and associated floating high voltage gate driver. The gate driver circuit works in conjunction with an external bootstrap capacitor and an internal high voltage diode. A 0.01-µF ceramic capacitor (C4) connected between the BST pin and SW pin provides the voltage to the driver during the on-time.

During each off-time, the SW pin is at approximately 0 V and the bootstrap capacitor charges from V_{CC} through the internal diode. The minimum off-timer, set to 300 ns, makes sure that a minimum time each cycle to recharge the bootstrap capacitor.

The internal precharge switch at the SW pin is turned on for ≅ 150 ns during the minimum off-time period, ensuring sufficient voltage exists across the bootstrap capacitor for the on-time. This feature helps prevent operating problems which can occur during very light-load conditions, involving a long off-time, during which the voltage across the bootstrap capacitor could otherwise decrease to less than the threshold for the gate drive UVLO. The precharge switch also helps prevent start-up problems which can occur if the output voltage is precharged prior to turnon. After current limit detection, the precharge switch is turned on for the entire duration of the forced off-time.

8.3.5.2.8 Thermal Protection

The LM5008A must be operated so the junction temperature does not exceed 125°C during normal operation. An internal Thermal Shutdown circuit is provided to shutdown the LM5008A in the event of a higher than normal junction temperature. When activated, typically at 165°C, the controller is forced into a low-power reset state by disabling the buck switch. This feature prevents catastrophic failures from accidental device overheating. When the junction temperature decreases below 140°C (typical hysteresis = 25°C), normal operation continues.

8.3.6 Gate Driver Protective Circuits

The DRV835x family of devices are fully protected against VM undervoltage, charge pump and low-side regulator undervoltage, MOSFET V_{DS} overcurrent, gate driver shorts, and overtemperature events.

8.3.6.1 VM Supply and VDRAIN Undervoltage Lockout (UVLO)

If at any time the input supply voltage on the VM pin falls below the V_{VM_UV} threshold or voltage on VDRAIN pin falls below the V_{VDR_UV}, all of the external MOSFETs are disabled, the charge pump is disabled, and the nFAULT pin is driven low. The FAULT and UVLO bits are also latched high in the registers on SPI devices. Normal operation continues (gate driver operation and the nFAULT pin is released) when the undervoltage condition is removed. The UVLO bit stays set until cleared through the CLR_FLT bit or an ENABLE pin reset pulse (t_{RST}).

VM supply or VDRAIN undervoltage may also lead to VCP charge pump or VGLS regulator undervoltage conditions to report. This behavior is expected because the VCP and VGLS supply voltages are dependent on VM and VDRAIN pin voltages.

8.3.6.2 VCP Charge-Pump and VGLS Regulator Undervoltage Lockout (GDUV)

If at any time the voltage on the VCP pin (charge pump) falls below the V_{VCP_UV} threshold or voltage on the VGLS pin falls below the V_{VGLS_UV} threshold, all of the external MOSFETs are disabled and the nFAULT pin is driven low. The FAULT and GDUV bits are also latched high in the registers on SPI devices. Normal operation continues (gate-driver operation and the nFAULT pin is released) when the undervoltage condition is removed. The GDUV bit stays set until cleared through the CLR_FLT bit or an ENABLE pin reset pulse (t_{RST}). Setting the DIS_GDUV bit high on the SPI devices disables this protection feature. On hardware interface devices, the GDUV protection is always enabled.

8.3.6.3 MOSFET V_{DS} Overcurrent Protection (VDS_OCP)

A MOSFET overcurrent event is sensed by monitoring the V_{DS} voltage drop across the external MOSFET $R_{DS(on)}$. If the voltage across an enabled MOSFET exceeds the V_{VDS_OCP} threshold for longer than the t_{OCP_DEG} deglitch time, a VDS_OCP event is recognized and action is done according to the OCP_MODE. On hardware interface devices, the V_{VDS_OCP} threshold is set with the VDS pin, the t_{OCP_DEG} is fixed at 4 µs, and the OCP_MODE is configured for 8-ms automatic retry but can be disabled by tying the VDS pin to DVDD. On SPI devices, the V_{VDS_OCP} threshold is set through the VDS_LVL SPI register, the t_{OCP_DEG} is set through the OCP_DEG SPI register, and the OCP_MODE bit can operate in four different modes: V_{DS} latched shutdown, V_{DS} automatic retry, V_{DS} report only, and V_{DS} disabled.

版权 © 2018–2019, Texas Instruments Incorporated

The MOSFET V_{DS} overcurrent protection operates in cycle-by-cycle (CBC) mode by default. This can be disabled on SPI device variants through the SPI registers. When in cycle-by-cycle (CBC) mode a new rising edge on the PWM inputs will clear an existing overcurrent fault.

Additionally, on SPI devices the OCP_ACT register setting can be set to change the VDS_OCP overcurrent response between linked and individual shutdown modes. When OCP_ACT is 0, a VDS_OCP fault will only effect the half-bridge in which it occurred. When OCP_ACT is 1, all three half-bridges will respond to a VDS_OCP fault on any of the other half-bridges. OCP_ACT defaults to 0, individual shutdown mode.

8.3.6.3.1 V_{DS} Latched Shutdown (OCP_MODE = 00b)

After a VDS_OCP event in this mode, all the external MOSFETs are disabled and the nFAULT pin is driven low. The FAULT, VDS_OCP, and corresponding MOSFET OCP bits are latched high in the SPI registers. Normal operation continues (gate driver operation and the nFAULT pin is released) when the VDS_OCP condition is removed and a clear faults command is issued either through the CLR_FLT bit or an ENABLE reset pulse (t_{RST}).

8.3.6.3.2 V_{DS} Automatic Retry (OCP_MODE = 01b)

After a VDS_OCP event in this mode, all the external MOSFETs are disabled and the nFAULT pin is driven low. The FAULT, VDS_OCP, and corresponding MOSFET OCP bits are latched high in the SPI registers. Normal operation continues automatically (gate driver operation and the nFAULT pin is released) after the t_{RETRY} time elapses. The FAULT, VDS_OCP, and MOSFET OCP bits stay latched until the t_{RETRY} period expires.

8.3.6.3.3 V_{DS} Report Only (OCP_MODE = 10b)

No protective action occurs after a VDS_OCP event in this mode. The overcurrent event is reported by driving the nFAULT pin low and latching the FAULT, VDS_OCP, and corresponding MOSFET OCP bits high in the SPI registers. The gate drivers continue to operate as normal. The external controller manages the overcurrent condition by acting appropriately. The reporting clears (nFAULT pin is released) when the VDS_OCP condition is removed and a clear faults command is issued either through the CLR_FLT bit or an ENABLE reset pulse (t_{RST}).

8.3.6.3.4 V_{DS} Disabled (OCP_MODE = 11b)

No action occurs after a VDS_OCP event in this mode.

8.3.6.4 V_{SENSE} Overcurrent Protection (SEN_OCP)

Half-bridge overcurrent is also monitored by sensing the voltage drop across the external current-sense resistor with the SP pin. If at any time, the voltage on the SP input of the current-sense amplifier exceeds the V_{SEN_OCP} threshold for longer than the t_{OCP_DEG} deglitch time, a SEN_OCP event is recognized and action is done according to the OCP_MODE. On hardware interface devices, the V_{SENSE} threshold is fixed at 1 V, t_{OCP_DEG} is fixed at 4 µs, and the OCP_MODE for V_{SENSE} is fixed for 8-ms automatic retry. On SPI devices, the V_{SENSE} threshold is set through the SEN_LVL SPI register, the t_{OCP_DEG} is set through the OCP_DEG SPI register, and the OCP_MODE bit can operate in four different modes: V_{SENSE} latched shutdown, V_{SENSE} automatic retry, V_{SENSE} report only, and V_{SENSE} disabled.

The V_{SENSE} overcurrent protection operates in cycle-by-cycle (CBC) mode by default. This can be disabled on SPI device variants through the SPI registers. When in cycle-by-cycle (CBC) mode a new rising edge on the PWM inputs will clear an existing overcurrent fault.

Additionally, on SPI devices the OCP_ACT register setting can be set to change the SEN_OCP overcurrent response between linked and individual shutdown modes. When OCP_ACT is 0, a SEN_OCP fault will only effect the half-bridge in which it occurred. When OCP_ACT is 1, all three half-bridges will respond to a SEN_OCP fault on any of the other half-bridges. OCP_ACT defaults to 0, individual shutdown mode.

8.3.6.4.1 V_{SENSE} Latched Shutdown (OCP_MODE = 00b)

After a SEN_OCP event in this mode, all the external MOSFETs are disabled and the nFAULT pin is driven low. The FAULT and SEN_OCP bits are latched high in the SPI registers. Normal operation continues (gate driver operation and the nFAULT pin is released) when the SEN_OCP condition is removed and a clear faults command is issued either through the CLR_FLT bit or an ENABLE reset pulse (t_{RST}).

8.3.6.4.2 V_{SENSE} Automatic Retry (OCP_MODE = 01b)

After a SEN_OCP event in this mode, all the external MOSFETs are disabled and the nFAULT pin is driven low. The FAULT, SEN_OCP, and corresponding sense OCP bits are latched high in the SPI registers. Normal operation continues automatically (gate driver operation and the nFAULT pin is released) after the t_{RETRY} time elapses. The FAULT , SEN_OCP, and sense OCP bits stay latched until the t_{RETRY} period expires.

8.3.6.4.3 V_{SENSE} Report Only (OCP_MODE = 10b)

No protective action occurs after a SEN_OCP event in this mode. The overcurrent event is reported by driving the nFAULT pin low and latching the FAULT and SEN_OCP bits high in the SPI registers. The gate drivers continue to operate. The external controller manages the overcurrent condition by acting appropriately. The reporting clears (nFAULT released) when the SEN_OCP condition is removed and a clear faults command is issued either through the CLR_FLT bit or an ENABLE reset pulse (t_{RST}).

8.3.6.4.4 V_{SENSE} Disabled (OCP_MODE = 11b or DIS_SEN = 1b)

No action occurs after a SEN_OCP event in this mode. The SEN_OCP bit can be disabled independently of the VDS_OCP bit by using the DIS_SEN SPI register.

8.3.6.5 Gate Driver Fault (GDF)

The GHx and GLx pins are monitored such that if the voltage on the external MOSFET gate does not increase or decrease after the t_{DRIVE} time, a gate driver fault is detected. This fault may be encountered if the GHx or GLx pins are shorted to the PGND, SHx, or VM pins. Additionally, a gate driver fault may be encountered if the selected I_{DRIVE} setting is not sufficient to turn on the external MOSFET within the t_{DRIVE} period. After a gate drive fault is detected, all external MOSFETs are disabled and the nFAULT pin driven low. In addition, the FAULT, GDF, and corresponding VGS bits are latched high in the SPI registers. Normal operation continues (gate driver operation and the nFAULT pin is released) when the gate driver fault condition is removed and a clear faults command is issued either through the CLR_FLT bit or an ENABLE reset pulse (t_{RST}). On SPI devices, setting the DIS_GDF_UVLO bit high disables this protection feature.

Gate driver faults can indicate that the selected I_{DRIVE} or t_{DRIVE} settings are too low to slew the external MOSFET in the desired time. Increasing either the I_{DRIVE} or t_{DRIVE} setting can resolve gate driver faults in these cases. Alternatively, if a gate-to-source short occurs on the external MOSFET, a gate driver fault is reported because of the MOSFET gate not turning on.

8.3.6.6 Overcurrent Soft Shutdown (OCP Soft)

In the case of a MOSFET V_{DS} or V_{SENSE} overcurrent fault the driver uses a special shutdown sequence to protect the driver and MOSFETs from large voltage switching transients. These large voltage transients can be created when rapidly switching off the external MOSFETs when a large drain to source current is present, such as during an overcurrent event.

To mitigate this issue, the DRV835x family of devices reduce the I_{DRIVEN} pull down current setting for both the high-side and low-side gate drivers during the MOSFET turn off in response to the fault event. If the programmed I_{DRIVEN} value is less than 1100 mA, the IDRIVEN value is set to the minimum I_{DRIVEN} setting. If the programmed I_{DRIVEN} value is greater than or equal to 1100mA, the I_{DRIVEN} value is reduced by seven code settings.

8.3.6.7 Thermal Warning (OTW)

If the die temperature exceeds the trip point of the thermal warning (T_{OTW}), the OTW bit is set in the registers of SPI devices. The device does no additional action and continues to function. When the die temperature falls below the hysteresis point of the thermal warning, the OTW bit clears automatically. The OTW bit can also be configured to report on the nFAULT pin and FAULT bit by setting the OTW_REP bit to 1 through the SPI registers.

版权 © 2018–2019, Texas Instruments Incorporated

8.3.6.8 Thermal Shutdown (OTSD)

If the die temperature exceeds the trip point of the thermal shutdown limit (T_{OTSD}), all the external MOSFETs are disabled, the charge pump is shut down, and the nFAULT pin is driven low. In addition, the FAULT and TSD bits are latched high. Normal operation continues (gate driver operation and the nFAULT pin is released) when the overtemperature condition is removed. The TSD bit stays latched high indicating that a thermal event occurred until a clear fault command is issued either through the CLR_FLT bit or an ENABLE reset pulse (t_{RST}). This protection feature cannot be disabled.

8.3.6.9 Fault Response Table

表 6. Fault Action and Response

FAULT	CONDITION	CONFIGURATION	REPORT	GATE DRIVER	RECOVERY
VM Undervoltage (VM_UV)	$V_{VM} < V_{VM_UV}$	—	nFAULT	Hi-Z	Automatic: $V_{VM} > V_{VM_UV}$
VDRAIN Undervoltage (VDR_UV)	$V_{VDRAIN} < V_{VDR_UV}$	—	nFAULT	Hi-Z	Automatic: $V_{VM} > V_{VDR_UV}$
Charge Pump Undervoltage (VCP_UV)	$V_{VCP} < V_{VCP_UV}$	DIS_GDUV = 0b	nFAULT	Hi-Z	Automatic: $V_{VCP} > V_{VCP_UV}$
		DIS_GDUV = 1b	None	Active	
VGLS Regulator Undervoltage (VGLS_UV)	$V_{VGLS} < V_{VGLS_UV}$	DIS_GDUV = 0b	nFAULT	Hi-Z	Automatic: $V_{VGLS} > V_{VGLS_UV}$
		DIS_GDUV = 1b	None	Active	
V_{DS} Overcurrent (VDS_OCP)	$V_{DS} > V_{VDS_OCP}$	OCP_MODE = 00b	nFAULT	Hi-Z	Latched: CLR_FLT, ENABLE Pulse
		OCP_MODE = 01b	nFAULT	Hi-Z	Retry: t_{RETRY}
		OCP_MODE = 10b	nFAULT	Active	No action
		OCP_MODE = 11b	None	Active	No action
V_{SENSE} Overcurrent (SEN_OCP)	$V_{SP} > V_{SEN_OCP}$	OCP_MODE = 00b	nFAULT	Hi-Z	Latched: CLR_FLT, ENABLE Pulse
		OCP_MODE = 01b	nFAULT	Hi-Z	Retry: t_{RETRY}
		OCP_MODE = 10b	nFAULT	Active	No action
		OCP_MODE = 11b or DIS_SEN = 1b	None	Active	No action
Gate Driver Fault (GDF)	V_{GS} Stuck > t_{DRIVE}	DIS_GDF = 0b	nFAULT	Hi-Z	Latched: CLR_FLT, ENABLE Pulse
		DIS_GDF = 1b	None	Active	No action
Thermal Warning (OTW)	$T_J > T_{OTW}$	OTW_REP = 1b	nFAULT	Active	Automatic: $T_J < T_{OTW} – T_{HYS}$
		OTW_REP = 0b	None	Active	No action
Thermal Shutdown (OTSD)	$T_J > T_{OTSD}$	—	nFAULT	Hi-Z	Automatic: $T_J < T_{OTSD} – T_{HYS}$

8.4 Device Functional Modes

8.4.1 Gate Driver Functional Modes

8.4.1.1 Sleep Mode

The ENABLE pin manages the state of the DRV835x family of devices. When the ENABLE pin is low, the device goes to a low-power sleep mode. In sleep mode, all gate drivers are disabled, all external MOSFETs are disabled, the VCP charge pump and VGLS regulator are disabled, the DVDD regulator is disabled, the sense amplifiers are disabled, and the SPI bus is disabled. In sleep mode all the device registers will reset to their default values. The t_{SLEEP} time must elapse after a falling edge on the ENABLE pin before the device goes to sleep mode. The device comes out of sleep mode automatically if the ENABLE pin is pulled high. The t_{WAKE} time must elapse before the device is ready for inputs.

In sleep mode and when $V_{VM} < V_{UVLO}$, all external MOSFETs are disabled. The high-side gate pins, GHx, are pulled to the SHx pin by an internal resistor and the low-side gate pins, GLx, are pulled to the PGND pin by an internal resistor.

Device Functional Modes (接下页)

8.4.1.2 Operating Mode

When the ENABLE pin is high and $V_{VM} > V_{UVLO}$, the device goes to operating mode. The t_{WAKE} time must elapse before the device is ready for inputs. In this mode the charge pump, low-side gate regulator, DVDD regulator, and SPI bus are active

8.4.1.3 Fault Reset (CLR_FLT or ENABLE Reset Pulse)

In the case of device latched faults, the DRV835x family of devices goes to a partial shutdown state to help protect the external power MOSFETs and system.

When the fault condition has been removed the device can reenter the operating state by either setting the CLR_FLT SPI bit on SPI devices or issuing a result pulse to the ENABLE pin on either interface variant. The ENABLE reset pulse (t_{RST}) consists of a high-to-low-to-high transition on the ENABLE pin. The low period of the sequence should fall with the t_{RST} time window or else the device will start the complete shutdown sequence. The reset pulse has no effect on any of the regulators, device settings, or other functional blocks

8.4.2 Buck Regulator Functional Modes

8.4.2.1 Shutdown Mode

The RT/SD pin provides ON and OFF control for the LM5008A. When V_{SD} is below approximately 0.7 V, the device is in shutdown mode. Both the internal LDO and the switching regulator are off. The quiescent current in shutdown mode drops to 110 µA (typical) at V_{IN} = 48 V. The LM5008A also employs V_{CC} bias rail undervoltage protection. If the V_{CC} bias supply voltage is below its UV threshold, the regulator stays off.

8.4.2.2 Active Mode

LM5008A is in active mode when the internal bias rail, VCC, is above its UV threshold. Depending on the load current, the device operates in either DCM or CCM mode.

Whenever the load current is decreased to a level less than half the peak-to-peak inductor ripple current, the device goes to discontinuous conduction mode (DCM). Calculate the critical conduction boundary using 公式 10.

$$I_{BOUNDARY} = \frac{\Delta I_L}{2} = \frac{V_{OUT} \times (1 - D)}{2 \times L_F \times f_{SW}} \tag{10}$$

When the inductor current reaches zero, the SW node becomes high impedance. Resonant ringing occurs at SW as a result of the LC tank circuit formed by the buck inductor and the parasitic capacitance at the SW node. At light loads, several pulses may be skipped in between switching cycles, effectively reducing the switching frequency and further improving light-load efficiency.

8.5 Programming

This section applies only to the DRV835x SPI devices.

8.5.1 SPI Communication

8.5.1.1 SPI

On DRV835x SPI devices, an SPI bus is used to set device configurations, operating parameters, and read out diagnostic information. The SPI operates in slave mode and connects to a master controller. The SPI input data (SDI) word consists of a 16 bit word, with a 5 bit command and 11 bits of data. The SPI output data (SDO) word consists of 11-bit register data. The first 5 bits are don’t care bits.

A valid frame must meet the following conditions:

- The SCLK pin should be low when the nSCS pin transitions from high to low and from low to high.
- The nSCS pin should be pulled high for at least 400 ns between words.
- When the nSCS pin is pulled high, any signals at the SCLK and SDI pins are ignored and the SDO pin is set Hi-Z.
- Data is captured on the falling edge of SCLK and data is propagated on the rising edge of SCLK.

版权 © 2018–2019, Texas Instruments Incorporated

Programming (接下页)

- The most significant bit (MSB) is shifted in and out first.
- A full 16 SCLK cycles must occur for transaction to be valid.
- If the data word sent to the SDI pin is not 16 bits, a frame error occurs and the data word is ignored.
- For a write command, the existing data in the register being written to is shifted out on the SDO pin following the 5 bit command data.
- The SDO pin is an open-drain output and requires an external pullup resistor.

8.5.1.1.1 SPI Format

The SDI input data word is 16 bits long and consists of the following format:

- 1 read or write bit, W (bit B15)
- 4 address bits, A (bits B14 through B11)
- 11 data bits, D (bits B11 through B0)

Set the read/write bit (W0, B15) to 0b for a write command. Set the read/write bit (W0, B15) to 1b for a read command.

The SDO output data word is 16 bits long and the first 5 bits are don't care bits. The response word is the data currently in the register being accessed.

表 7. SDI Input Data Word Format

R/W	ADDRESS				DATA										
B15	B14	B13	B12	B11	B10	B9	B8	B7	B6	B5	B4	B3	B2	B1	B0
W0	A3	A2	A1	A0	D10	D9	D8	D7	D6	D5	D4	D3	D2	D1	D0

表 8. SDO Output Data Word Format

DON'T CARE BITS					DATA										
B15	B14	B13	B12	B11	B10	B9	B8	B7	B6	B5	B4	B3	B2	B1	B0
X	X	X	X	X	D10	D9	D8	D7	D6	D5	D4	D3	D2	D1	D0

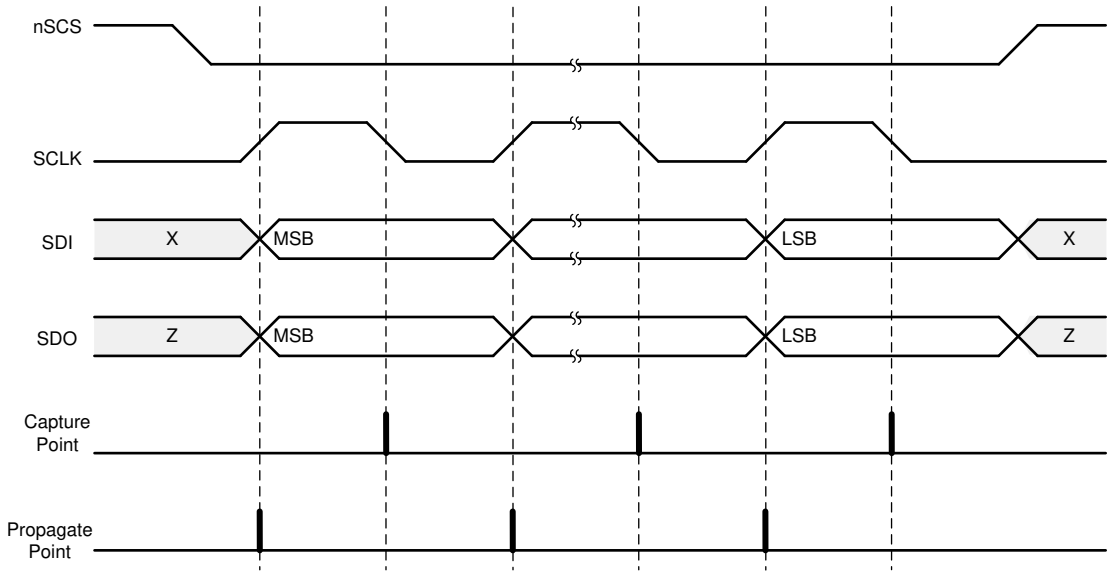

图 54. SPI Slave Timing Diagram

8.6 Register Maps

This section applies only to the DRV835x SPI devices.

注

Do not modify reserved registers or addresses not listed in the register maps (Table 9). Writing to these registers may have unintended effects. For all reserved bits, the default value is 0. To help prevent erroneous SPI writes from the master controller, set the LOCK bits to lock the SPI registers.

Table 9. Register Map

Name	10	9	8	7	6	5	4	3	2	1	0	Type	Address
DRV8350S and DRV8350RS													
Fault Status 1	FAULT	VDS_OCP	GDF	UVLO	OTSD	VDS_HA	VDS_LA	VDS_HB	VDS_LB	VDS_HC	VDS_LC	R	0h
VGS Status 2	SA_OC	SB_OC	SC_OC	OTW	GDUV	VGS_HA	VGS_LA	VGS_HB	VGS_LB	VGS_HC	VGS_LC	R	1h
Driver Control	OCP_ACT	DIS_GDUV	DIS_GDF	OTW_REP	PWM_MODE		1PWM_COM	1PWM_DIR	COAST	BRAKE	CLR_FLT	RW	2h
Gate Drive HS	LOCK			IDRIVEP_HS				IDRIVEN_HS				RW	3h
Gate Drive LS	CBC	TDRIVE		IDRIVEP_LS				IDRIVEN_LS				RW	4h
OCP Control	TRETRY	DEAD_TIME		OCP_MODE		OCP_DEG		VDS_LVL				RW	5h
Reserved	Reserved											RW	6h
Reserved	Reserved											RW	7h
DRV8353S and DRV8353RS													
Fault Status 1	FAULT	VDS_OCP	GDF	UVLO	OTSD	VDS_HA	VDS_LA	VDS_HB	VDS_LB	VDS_HC	VDS_LC	R	0h
VGS Status 2	SA_OC	SB_OC	SC_OC	OTW	GDUV	VGS_HA	VGS_LA	VGS_HB	VGS_LB	VGS_HC	VGS_LC	R	1h
Driver Control	OCP_ACT	DIS_GDUV	DIS_GDF	OTW_REP	PWM_MODE		1PWM_COM	1PWM_DIR	COAST	BRAKE	CLR_FLT	RW	2h
Gate Drive HS	LOCK			IDRIVEP_HS				IDRIVEN_HS				RW	3h
Gate Drive LS	CBC	TDRIVE		IDRIVEP_LS				IDRIVEN_LS				RW	4h
OCP Control	TRETRY	DEAD_TIME		OCP_MODE		OCP_DEG		VDS_LVL				RW	5h
CSA Control	CSA_FET	VREF_DIV	LS_REF	CSA_GAIN		DIS_SEN	CSA_CAL_A	CSA_CAL_B	CSA_CAL_C	SEN_LVL		RW	6h
Reserved	Reserved										CAL_MODE	RW	7h

Copyright © 2018–2019, Texas Instruments Incorporated

8.6.1 Status Registers

The status registers are used to reporting warning and fault conditions. The status registers are read-only registers

Complex bit access types are encoded to fit into small table cells. Table 10 shows the codes that are used for access types in this section.

Table 10. Status Registers Access Type Codes

Access Type	Code	Description
Read Type		
R	R	Read
Reset or Default Value		
-n		Value after reset or the default value

8.6.1.1 Fault Status Register 1 (address = 0x00h)

The fault status register 1 is shown in Figure 55 and described in Table 11.

Register access type: Read only

Figure 55. Fault Status Register 1

10	9	8	7	6	5	4	3	2	1	0
FAULT	VDS_OCP	GDF	UVLO	OTSD	VDS_HA	VDS_LA	VDS_HB	VDS_LB	VDS_HC	VDS_LC
R-0b	R-0b	R-0b	R-0b	R-0b	R-0b	R-0b	R-0b	R-0b	R-0b	R-0b

Table 11. Fault Status Register 1 Field Descriptions

Bit	Field	Type	Default	Description
10	FAULT	R	0b	Logic OR of FAULT status registers. Mirrors nFAULT pin.
9	VDS_OCP	R	0b	Indicates VDS monitor overcurrent fault condition
8	GDF	R	0b	Indicates gate drive fault condition
7	UVLO	R	0b	Indicates undervoltage lockout fault condition
6	OTSD	R	0b	Indicates overtemperature shutdown
5	VDS_HA	R	0b	Indicates VDS overcurrent fault on the A high-side MOSFET
4	VDS_LA	R	0b	Indicates VDS overcurrent fault on the A low-side MOSFET
3	VDS_HB	R	0b	Indicates VDS overcurrent fault on the B high-side MOSFET
2	VDS_LB	R	0b	Indicates VDS overcurrent fault on the B low-side MOSFET
1	VDS_HC	R	0b	Indicates VDS overcurrent fault on the C high-side MOSFET
0	VDS_LC	R	0b	Indicates VDS overcurrent fault on the C low-side MOSFET

Copyright © 2018–2019, Texas Instruments Incorporated

8.6.1.2 Fault Status Register 2 (address = 0x01h)

The fault status register 2 is shown in Figure 56 and described in Table 12.

Register access type: Read only

Figure 56. Fault Status Register 2

10	9	8	7	6	5	4	3	2	1	0
SA_OC	SB_OC	SC_OC	OTW	GDUV	VGS_HA	VGS_LA	VGS_HB	VGS_LB	VGS_HC	VGS_LC
R-0b	R-0b	R-0b	R-0b	R-0b	R-0b	R-0b	R-0b	R-0b	R-0b	R-0b

Table 12. Fault Status Register 2 Field Descriptions

Bit	Field	Type	Default	Description
10	SA_OC	R	0b	Indicates overcurrent on phase A sense amplifier (DRV8353xS)
9	SB_OC	R	0b	Indicates overcurrent on phase B sense amplifier (DRV8353xS)
8	SC_OC	R	0b	Indicates overcurrent on phase C sense amplifier (DRV8353xS)
7	OTW	R	0b	Indicates overtemperature warning
6	GDUV	R	0b	Indicates VCP charge pump and/or VGLS undervoltage fault condition
5	VGS_HA	R	0b	Indicates gate drive fault on the A high-side MOSFET
4	VGS_LA	R	0b	Indicates gate drive fault on the A low-side MOSFET
3	VGS_HB	R	0b	Indicates gate drive fault on the B high-side MOSFET
2	VGS_LB	R	0b	Indicates gate drive fault on the B low-side MOSFET
1	VGS_HC	R	0b	Indicates gate drive fault on the C high-side MOSFET
0	VGS_LC	R	0b	Indicates gate drive fault on the C low-side MOSFET

Copyright © 2018–2019, Texas Instruments Incorporated

8.6.2 Control Registers

The control registers are used to configure the device. The control registers are read and write capable

Complex bit access types are encoded to fit into small table cells. Table 13 shows the codes that are used for access types in this section.

Table 13. Control Registers Access Type Codes

Access Type	Code	Description
Read Type		
R	R	Read
Write Type		
W	W	Write
Reset or Default Value		
-n		Value after reset or the default value

8.6.2.1 Driver Control Register (address = 0x02h)

The driver control register is shown in Figure 57 and described in Table 14.

Register access type: Read/Write

Figure 57. Driver Control Register

10	9	8	7	6	5	4	3	2	1	0
OCP _ACT	DIS _GDUV	DIS _GDF	OTW _REP	PWM_MODE		1PWM _COM	1PWM _DIR	COAST	BRAKE	CLR _FLT
R/W-0b	R/W-0b	R/W-0b	R/W-0b	R/W-00b		R/W-0b	R/W-0b	R/W-0b	R/W-0b	R/W-0b

Table 14. Driver Control Field Descriptions

Bit	Field	Type	Default	Description
10	OCP_ACT	R/W	0b	**0b = Associated half-bridge is shutdown in response to VDS_OCP and SEN_OCP** 1b = All three half-bridges are shutdown in response to VDS_OCP and SEN_OCP
9	DIS_GDUV	R/W	0b	**0b =VCP and VGLS undervoltage lockout fault is enabled** 1b = VCP and VGLS undervoltage lockout fault is disabled
8	DIS_GDF	R/W	0b	**0b = Gate drive fault is enabled** 1b = Gate drive fault is disabled
7	OTW_REP	R/W	0b	**0b = OTW is not reported on nFAULT or the FAULT bit** 1b = OTW is reported on nFAULT and the FAULT bit
6-5	PWM_MODE	R/W	00b	**00b = 6x PWM Mode** 01b = 3x PWM mode 10b = 1x PWM mode 11b = Independent PWM mode
4	1PWM_COM	R/W	0b	**0b = 1x PWM mode uses synchronous rectification** 1b = 1x PWM mode uses asynchronous rectification
3	1PWM_DIR	R/W	0b	In 1x PWM mode this bit is ORed with the INHC (DIR) input
2	COAST	R/W	0b	Write a 1 to this bit to put all MOSFETs in the Hi-Z state
1	BRAKE	R/W	0b	Write a 1 to this bit to turn on all three low-side MOSFETs This bit is ORed with the INLC (BRAKE) input in 1x PWM mode.
0	CLR_FLT	R/W	0b	Write a 1 to this bit to clear latched fault bits. This bit automatically resets after being writen.

8.6.2.2 Gate Drive HS Register (address = 0x03h)

The gate drive HS register is shown in Figure 58 and described in Table 15.

Register access type: Read/Write

Figure 58. Gate Drive HS Register

10	9	8	7	6	5	4	3	2	1	0
LOCK			IDRIVEP_HS				IDRIVEn_HS			
R/W-011b			R/W-1111b				R/W-1111b			

Table 15. Gate Drive HS Field Descriptions

Bit	Field	Type	Default	Description
10-8	LOCK	R/W	011b	Write 110b to lock the settings by ignoring further register writes except to these bits and address 0x02h bits 0-2. Writing any sequence other than 110b has no effect when unlocked. Write 011b to this register to unlock all registers. Writing any sequence other than 011b has no effect when locked.
7-4	IDRIVEP_HS	R/W	1111b	0000b = 50 mA 0001b = 50 mA 0010b = 100 mA 0011b = 150 mA 0100b = 300 mA 0101b = 350 mA 0110b = 400 mA 0111b = 450 mA 1000b = 550 mA 1001b = 600 mA 1010b = 650 mA 1011b = 700 mA 1100b = 850 mA 1101b = 900 mA 1110b = 950 mA **1111b = 1000 mA**
3-0	IDRIVEN_HS	R/W	1111b	0000b = 100 mA 0001b = 100 mA 0010b = 200 mA 0011b = 300 mA 0100b = 600 mA 0101b = 700 mA 0110b = 800 mA 0111b = 900 mA 1000b = 1100 mA 1001b = 1200 mA 1010b = 1300 mA 1011b = 1400 mA 1100b = 1700 mA 1101b = 1800 mA 1110b = 1900 mA **1111b = 2000 mA**

Copyright © 2018–2019, Texas Instruments Incorporated

8.6.2.3 Gate Drive LS Register (address = 0x04h)

The gate drive LS register is shown in Figure 59 and described in Table 16.

Register access type: Read/Write

Figure 59. Gate Drive LS Register

10	9	8	7	6	5	4	3	2	1	0
CBC	TDRIVE		IDRIVEP_LS				IDRIVEN_LS			
R/W-1b	R/W-11b		R/W-1111b				R/W-1111b			

Table 16. Gate Drive LS Register Field Descriptions

Bit	Field	Type	Default	Description
10	CBC	R/W	1b	Active only when OCP_MODE = 01b 0b = For VDS_OCP and SEN_OCP, the fault is cleared after t_{RETRY} **1b = For VDS_OCP and SEN_OCP, the fault is cleared when a new PWM input is given or after t_{RETRY}**
9-8	TDRIVE	R/W	11b	00b = 500-ns peak gate-current drive time 01b = 1000-ns peak gate-current drive time 10b = 2000-ns peak gate-current drive time **11b = 4000-ns peak gate-current drive time**
7-4	IDRIVEP_LS	R/W	1111b	0000b = 50 mA 0001b = 50 mA 0010b = 100 mA 0011b = 150 mA 0100b = 300 mA 0101b = 350 mA 0110b = 400 mA 0111b = 450 mA 1000b = 550 mA 1001b = 600 mA 1010b = 650 mA 1011b = 700 mA 1100b = 850 mA 1101b = 900 mA 1110b = 950 mA **1111b = 1000 mA**
3-0	IDRIVEN_LS	R/W	1111b	0000b = 100 mA 0001b = 100 mA 0010b = 200 mA 0011b = 300 mA 0100b = 600 mA 0101b = 700 mA 0110b = 800 mA 0111b = 900 mA 1000b = 1100 mA 1001b = 1200 mA 1010b = 1300 mA 1011b = 1400 mA 1100b = 1700 mA 1101b = 1800 mA 1110b = 1900 mA **1111b = 2000 mA**

Copyright © 2018–2019, Texas Instruments Incorporated

8.6.2.4 OCP Control Register (address = 0x05h)

The OCP control register is shown in Figure 60 and described in Table 17.

Register access type: Read/Write

Figure 60. OCP Control Register

10	9	8	7	6	5	4	3	2	1	0
TRETRY	DEAD_TIME		OCP_MODE		OCP_DEG		VDS_LVL			
R/W-0b	R/W-01b		R/W-01b		R/W-01b		R/W-1101b			

Table 17. OCP Control Field Descriptions

Bit	Field	Type	Default	Description
10	TRETRY	R/W	0b	**0b = VDS_OCP and SEN_OCP retry time is 8 ms** 1b = VDS_OCP and SEN_OCP retry time is 50 µs
9-8	DEAD_TIME	R/W	01b	00b = 50-ns dead time **01b = 100-ns dead time** 10b = 200-ns dead time 11b = 400-ns dead time
7-6	OCP_MODE	R/W	01b	00b = Overcurrent causes a latched fault **01b = Overcurrent causes an automatic retrying fault** 10b = Overcurrent is report only but no action is taken 11b = Overcurrent is not reported and no action is taken
5-4	OCP_DEG	R/W	10b	00b = Overcurrent deglitch of 1 µs 01b = Overcurrent deglitch of 2 µs **10b = Overcurrent deglitch of 4 µs** 11b = Overcurrent deglitch of 8 µs
3-0	VDS_LVL	R/W	1001b	0000b = 0.06 V 0001b = 0.07 V 0010b = 0.08 V 0011b = 0.09 V 0100b = 0.1 V 0101b = 0.2 V 0110b = 0.3 V 0111b = 0.4 V 1000b = 0.5 V 1001b = 0.6 V 1010b = 0.7 V 1011b = 0.8 V 1100b = 0.9 V **1101b = 1 V** 1110b = 1.5 V 1111b = 2 V

Copyright © 2018–2019, Texas Instruments Incorporated

8.6.2.5 CSA Control Register (DRV8353 and DRV8353R Only) (address = 0x06h)

The CSA control register is shown in Figure 61 and described in Table 18.

Register access type: Read/Write
This register is only available with the DRV8353x family of devices.

Figure 61. CSA Control Register

10	9	8	7	6	5	4	3	2	1	0
CSA _FET	VREF _DIV	LS _REF	CSA _GAIN		DIS _SEN	CSA _CAL_A	CSA _CAL_B	CSA _CAL_C	SEN _LVL	
R/W-0b	R/W-1b	R/W-0b	R/W-10b		R/W-0b	R/W-0b	R/W-0b	R/W-0b	R/W-11b	

Table 18. CSA Control Field Descriptions

Bit	Field	Type	Default	Description
10	CSA_FET	R/W	0b	**0b = Sense amplifier positive input is SPx** 1b = Sense amplifier positive input is SHx (also automatically sets the LS_REF bit to 1)
9	VREF_DIV	R/W	1b	0b = Sense amplifier reference voltage is VREF (unidirectional mode) **1b = Sense amplifier reference voltage is VREF divided by 2**
8	LS_REF	R/W	0b	**0b = VDS_OCP for the low-side MOSFET is measured across SHx to SPx** 1b = VDS_OCP for the low-side MOSFET is measured across SHx to SNx
7-6	CSA_GAIN	R/W	10b	00b = 5-V/V shunt amplifier gain 01b = 10-V/V shunt amplifier gain **10b = 20-V/V shunt amplifier gain** 11b = 40-V/V shunt amplifier gain
5	DIS_SEN	R/W	0b	**0b = Sense overcurrent fault is enabled** 1b = Sense overcurrent fault is disabled
4	CSA_CAL_A	R/W	0b	**0b = Normal sense amplifier A operation** 1b = Short inputs to sense amplifier A for offset calibration
3	CSA_CAL_B	R/W	0b	**0b = Normal sense amplifier B operation** 1b = Short inputs to sense amplifier B for offset calibration
2	CSA_CAL_C	R/W	0b	**0b = Normal sense amplifier C operation** 1b = Short inputs to sense amplifier C for offset calibration
1-0	SEN_LVL	R/W	11b	00b = Sense OCP 0.25 V 01b = Sense OCP 0.5 V 10b = Sense OCP 0.75 V **11b = Sense OCP 1 V**

Copyright © 2018–2019, Texas Instruments Incorporated

8.6.2.6 Driver Configuration Register (DRV8353 and DRV8353R Only) (address = 0x07h)

The driver configuration register is shown in Figure 62 and described in Table 19.

Register access type: Read/Write
This register is only available with the DRV8353 and DRV8353R devices.

Figure 62. Driver Configuration Register

10	9	8	7	6	5	4	3	2	1	0
Reserved										CAL _MODE
R/W-000 0000 000b										R/W-0b

Table 19. Driver Configuration Field Descriptions

Bit	Field	Type	Default	Description
10-1	Reserved	R/W	000 0000 000b	Reserved
0	CAL_MODE	R/W	0b	**0b = Amplifier calibration operates in manual mode** 1b = Amplifier calibration uses internal auto calibration routine

版权 © 2018–2019, Texas Instruments Incorporated

9 Application and Implementation

注

Information in the following applications sections is not part of the TI component specification, and TI does not warrant its accuracy or completeness. TI's customers are responsible for determining suitability of components for their purposes. Customers should validate and test their design implementation to confirm system functionality.

9.1 Application Information

The DRV835x family of devices are primarily used in three-phase brushless DC motor control applications. The design procedures in the *Typical Application* section highlight how to use and configure the DRV835x family of devices.

9.2 Typical Application

9.2.1 Primary Application

The DRV8353R is shown being used for a single supply, three-phase BLDC motor drive with individual half-bridge current sense in this application example.

Typical Application（接下页）

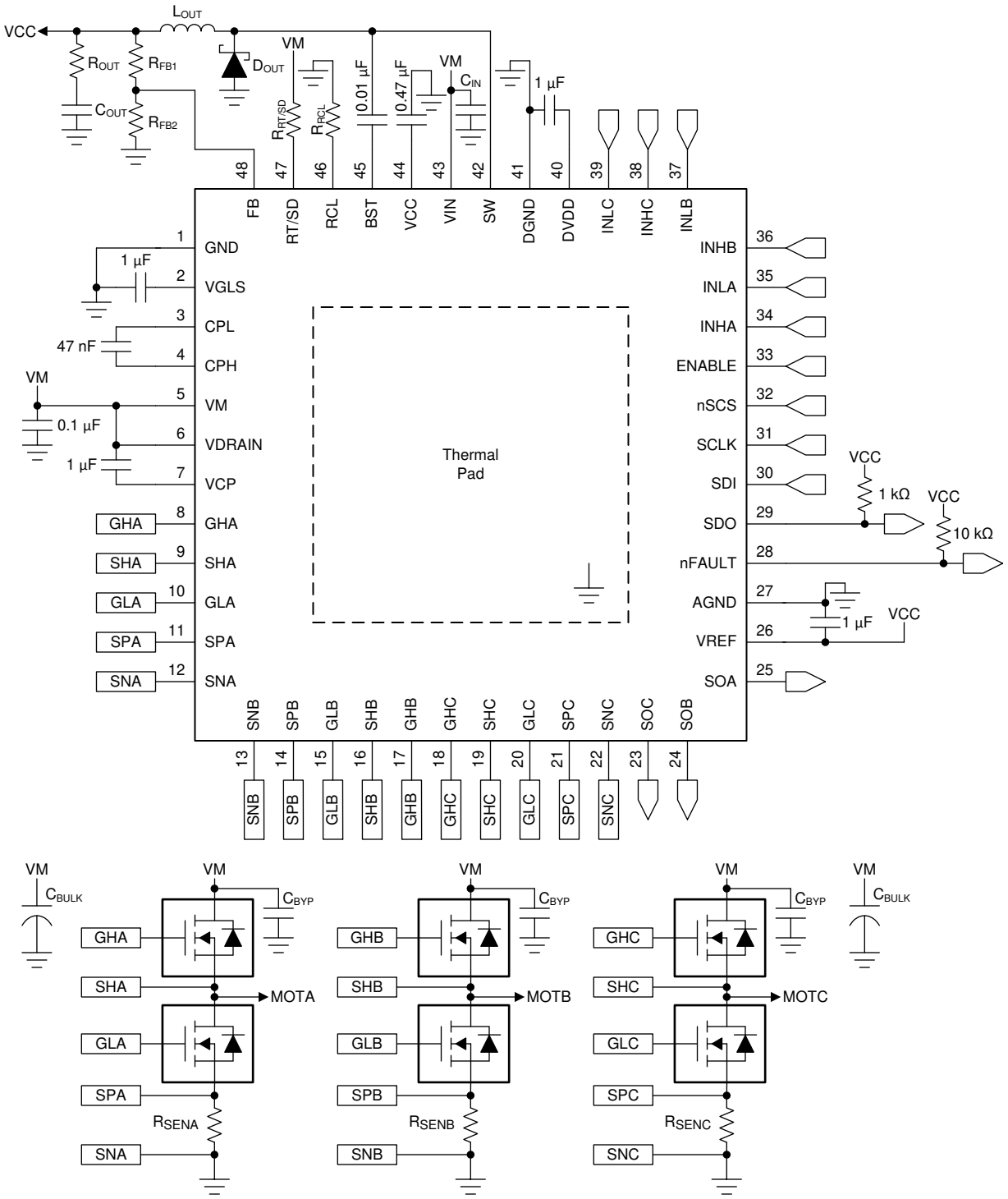

图 63. Primary Application Schematic

版权 © 2018–2019, Texas Instruments Incorporated

Typical Application (接下页)

9.2.1.1 Design Requirements

表 20 lists the example input parameters for the system design.

表 20. Design Parameters

EXAMPLE DESIGN PARAMETER	REFERENCE	EXAMPLE VALUE
Power supply voltage	V_{VM}, V_{VDRAIN}, V_{VIN}	48 V
MOSFET part number	MOSFET	CSD19535KCS
MOSFET total gate charge	Q_g	78 nC (typical) at V_{VGS} = 10 V
MOSFET gate to drain charge	Q_{gd}	13 nC (typical)
Target output rise time	t_r	100 to 300 ns
Target output fall time	t_f	50 to 150 ns
PWM frequency	f_{PWM}	45 kHz
Buck regulator output voltage	V_{VCC}	3.3 V
Buck regulator output current	I_{VCC}	100 mA
Maximum motor current	I_{max}	100 A
ADC reference voltage	V_{VREF}	3.3 V
Winding sense current range	I_{SENSE}	–40 A to +40 A
Motor RMS current	I_{RMS}	28.3 A
Sense resistor power rating	P_{SENSE}	3 W
System ambient temperature	T_A	–20°C to +60°C

9.2.1.2 Detailed Design Procedure

表 21 lists the recommended values of the external components for the gate driver. 表 22 lists the recommended values of the external components for the buck regulator.

表 21. DRV835x Gate-Driver External Components

COMPONENTS	PIN 1	PIN 2	RECOMMENDED
C_{VM1}	VM	GND	X5R or X7R, 0.1-µF, VM-rated capacitor
C_{VM2}	VM	GND	≥ 10 µF, VM-rated capacitor
C_{VCP}	VCP	VM	X5R or X7R, 1-µF, 16-V capacitor
C_{VGLS}	VGLS	GND	X5R or X7R, 1-µF, 16-V capacitor
C_{SW}	CPH	CPL	X5R or X7R, 47-nF, VDRAIN-rated capacitor
C_{DVDD}	DVDD	DGND	X5R or X7R, 1-µF, 6.3-V capacitor
R_{nFAULT}	VCC (1)	nFAULT	Pullup resistor
R_{SDO}	VCC (1)	SDO	Pullup resistor
R_{IDRIVE}	IDRIVE	GND or DVDD	DRV835x hardware interface
R_{VDS}	VDS	GND or DVDD	DRV835x hardware interface
R_{MODE}	MODE	GND or DVDD	DRV835x hardware interface
R_{GAIN}	GAIN	GND or DVDD	DRV835x hardware interface
C_{VREF}	VREF	GND or DGND	Optional capacitor rated for VREF
R_{ASENSE}	SPA	SNA and GND	Sense shunt resistor
R_{BSENSE}	SPB	SNB and GND	Sense shunt resistor
R_{CSENSE}	SPC	SNC and GND	Sense shunt resistor

(1) VCC is not a pin on the DRV835x family of devices, but a VCC supply voltage pullup is required for the open-drain output nFAULT and SDO. These pins can also be pulled up to DVDD.

表 22. DRV835xR Buck Regulator External Components

COMPONENT	PIN 1	PIN 2	RECOMMENDED
C_{IN} (1)	VIN	GND	X5R or X7R, VIN-rated capacitor
C_{BST} (1)	BST	SW	X5R or X7R, 0.01-µF, 16-V rated capacitor
C_{VCC} (1)	VCC	GND	X5R or X7R, 0.47-µF, 16-V rated capacitor
D_{SW} (1)	SW	GND	Schottky diode
L_{SW} (1)	SW	OUT (2)	Output filter inductor
C_{OUT} (1)	OUT (2)	GND	X5R or X7R, OUT-rated capacitor
R_{OUT} (1)	OUT (2)	GND	Output ripple resistor
R_{FB1} (1)	OUT (2)	FB	Resistor divider to set buck output voltage
R_{FB2} (1)	FB	GND	

(1) For detailed design procedures, refer to the *LM5008A 100-V 350-mA Constant On-Time Buck Switching Regulator* data sheet.
(2) OUT is not a pin on the DRV8350R and DRV8353R devices, but the regulated output voltage of the buck regulator after the output inductor.

9.2.1.2.1 External MOSFET Support

The DRV835x family of devices MOSFET support is based on the MOSFET gate charge, VCP charge-pump capacity, VGLS regulator capacity, and output PWM switching frequency. For a quick calculation of MOSFET driving capacity, use 公式 11 and 公式 12 for three phase BLDC motor applications.

Trapezoidal 120° Commutation: $I_{VCP/VGLS} > Q_g \times f_{PWM}$ (11)

Sinusoidal 180° Commutation: $I_{VCP/VGLS} > 3 \times Q_g \times f_{PWM}$

where

- f_{PWM} is the maximum desired PWM switching frequency.
- Q_g is the MOSFET total gate charge
- $I_{VCP/VGLS}$ is the charge pump or low-side regulator capacity, dependent on the VM pin voltage.
- The MOSFET multiplier based on the commutation control method, may vary based on implementation. (12)

9.2.1.2.1.1 MOSFET Example

If a system is using V_{VM} = 48 V (I_{VCP} = 25 mA) and a maximum PWM switching frequency of 45 kHz, then the VCP charge-pump and VGLS regulator can support MOSFETs using trapezoidal commutation with a Q_g < 556 nC, and MOSFETs using sinusoidal commutation with a Q_g < 185 nC.

9.2.1.2.2 IDRIVE Configuration

The gate drive current strength, I_{DRIVE}, is selected based on the gate-to-drain charge of the external MOSFETs and the target rise and fall times at the outputs. If I_{DRIVE} is selected to be too low for a given MOSFET, then the MOSFET may not turn on completely within the t_{DRIVE} time and a gate drive fault may be asserted. Additionally, slow rise and fall times will lead to higher switching power losses. TI recommends adjusting these values in system with the required external MOSFETs and motor to determine the best possible setting for any application.

The I_{DRIVEP} and I_{DRIVEN} current for both the low-side and high-side MOSFETs are independently adjustable on SPI devices through the SPI registers. On hardware interface devices, both source and sink settings are selected at the same time on the IDRIVE pin.

For MOSFETs with a known gate-to-drain charge Q_{gd}, desired rise time (t_r), and a desired fall time (t_f), use 公式 13 and 公式 14 to calculate the value of I_{DRIVEP} and I_{DRIVEN} (respectively).

$$I_{DRIVEP} > \frac{Q_{gd}}{t_r} \quad (13)$$

$$I_{DRIVEN} > \frac{Q_{gd}}{t_f} \quad (14)$$

9.2.1.2.2.1 IDRIVE Example

Use 公式 15 and 公式 16 to calculate the value of $I_{DRIVEP1}$ and $I_{DRIVEP2}$ (respectively) for a gate to drain charge of 13 nC and a rise time from 100 to 300 ns.

版权 © 2018–2019, Texas Instruments Incorporated

$$I_{DRIVEP1} = \frac{13\ nC}{100\ ns} = 130\ mA \tag{15}$$

$$I_{DRIVEP2} = \frac{13\ nC}{300\ ns} = 43\ mA \tag{16}$$

Select a value for I_{DRIVEP} that is between 43 mA and 130 mA. For this example, the value of I_{DRIVEP} was selected as 100-mA source.

Use 公式 17 and 公式 18 to calculate the value of $I_{DRIVEN1}$ and $I_{DRIVEN2}$ (respectively) for a gate to drain charge of 13 nC and a fall time from 50 to 150 ns.

$$I_{DRIVEN1} = \frac{13\ nC}{50\ ns} = 260\ mA \tag{17}$$

$$I_{DRIVEN2} = \frac{13\ nC}{150\ ns} = 87\ mA \tag{18}$$

Select a value for I_{DRIVEN} that is between 87 mA and 260 mA. For this example, the value of I_{DRIVEN} was selected as 200-mA sink.

9.2.1.2.3 V_{DS} Overcurrent Monitor Configuration

The V_{DS} monitors are configured based on the worst-case motor current and the $R_{DS(on)}$ of the external MOSFETs as shown in 公式 19.

$$V_{DS_OCP} > I_{max} \times R_{DS(on)max} \tag{19}$$

9.2.1.2.3.1 V_{DS} Overcurrent Example

The goal of this example is to set the V_{DS} monitor to trip at a current greater than 75 A. According to the *CSD19535KCS 100 V N-Channel NexFET™ Power MOSFET* data sheet, the $R_{DS(on)}$ value is 2.2 times higher at 175°C, and the maximum $R_{DS(on)}$ value at a V_{GS} of 10 V is 3.6 mΩ at T_A = 25°C. From these values, the approximate worst-case value of $R_{DS(on)}$ is 2.2 × 3.6 mΩ = 7.92 mΩ.

Using 公式 19 with a value of 7.92 mΩ for $R_{DS(on)}$ and a worst-case motor current of 75 A, 公式 20 shows the calculated desired value of the V_{DS} overcurrent monitors.

$$V_{DS_OCP} > 75\ A \times 7.92\ m\Omega$$

$$V_{DS_OCP} > 0.594\ V \tag{20}$$

For this example, the value of V_{DS_OCP} was selected as 0.6 V.

The SPI devices allow for adjustment of the deglitch time for the V_{DS} overcurrent monitor. The deglitch time can be set to 1 µs, 2 µs, 4 µs, or 8 µs.

9.2.1.2.4 Sense-Amplifier Bidirectional Configuration (DRV8353 and DRV8353R)

The sense amplifier gain on the DRV8353 and DRV8353R devices and sense resistor value are selected based on the target current range, VREF reference voltage, sense-resistor power rating, and operating temperature range. In bidirectional operation of the sense amplifier, the dynamic range at the output is approximately calculated as shown in 公式 21.

$$V_O = \left(V_{VREF} - 0.25\ V\right) - \frac{V_{VREF}}{2} \tag{21}$$

Use 公式 22 to calculate the approximate value of the selected sense resistor with V_O calculated using 公式 21.

$$R = \frac{V_O}{A_V \times I} \qquad P_{SENSE} > I_{RMS}^2 \times R \tag{22}$$

From 公式 21 and 公式 22, select a target gain setting based on the power rating of the target sense resistor.

9.2.1.2.4.1 Sense-Amplifier Example

In this system example, the value of VREF voltage is 3.3 V with a sense current from –40 to +40 A. The linear range of the SOx output is 0.25 V to V_{VREF} – 0.25 V (from the V_{LINEAR} specification). The differential range of the sense amplifier input is –0.3 to +0.3 V (V_{DIFF}).

$$V_O = (3.3\ V - 0.25\ V) - \frac{3.3\ V}{2} = 1.4\ V \tag{23}$$

$$R = \frac{1.4\ V}{A_V \times 40\ A} \qquad 2\ W > 28.3^2 \times R \rightarrow R < 2.5\ m\Omega \tag{24}$$

$$2.5\ m\Omega > \frac{1.4\ V}{A_V \times 40\ A} \rightarrow A_V > 14 \tag{25}$$

Therefore, the gain setting must be selected as 20 V/V or 40 V/V and the value of the sense resistor must be less than 2.5 mΩ to meet the power requirement for the sense resistor. For this example, the gain setting was selected as 20 V/V. The value of the resistor and worst case current can be verified that R < 2.5 mΩ and I_{max} = 40 A does not violate the differential range specification of the sense amplifier input (V_{SPxD}).

9.2.1.2.5 Single Supply Power Dissipation

Design care must be taken to make sure that the thermal ratings of the DRV835x are not violated during normal operation of the device. The is especially critical in higher voltage and higher ambient operation applications where power dissipation or the device ambient temperature are increased.

To determine the temperature of the device in single supply operation, first the power internal power dissipation must be calculated. The internal power dissipation has four primary components:

- VCP charge pump power dissipation (P_{VCP})
- VGLS low-side regulator power dissipation (P_{VGLS})
- VM device nominal power dissipation (P_{VM})
- VIN buck regulator power dissipation (P_{BUCK})

The values of P_{VCP} and P_{VGLS} can be approximated by referring to *External MOSFET Support* to first determine I_{VCP} and I_{VGLS} and then referring to 公式 26 and 公式 27.

$$P_{VCP} = I_{VCP} \times (V_{VM} + V_{VDRAIN}) \tag{26}$$

$$P_{VGLS} = I_{VGLS} \times V_{VM} \tag{27}$$

The value of P_{VM} can be calculated by referring to the data sheet parameter for I_{VM} current and 公式 28.

$$P_{VM} = I_{VM} \times V_{VM} \tag{28}$$

$$P_{BUCK} = (P_O / \eta) - P_O$$

where

$$P_O = V_{VCC} \times I_{VCC} \qquad (30) \tag{30}$$

The value of P_{BUCK} can be calculated with the buck output voltage (V_{VCC}), buck output current (I_{VCC}), and by referring to the typical characteristic curve for efficiency (η) in the LM5008A data sheet.

The total power dissipation is then calculated by summing the four components as shown in 公式 31.

$$P_{tot} = P_{VCP} + P_{VGLS} + P_{VM} + P_{BUCK} \tag{31}$$

Lastly, the device junction temperature can be estimate by referring to *Thermal Information* and 公式 32.

$$T_J max = T_A max + (R_{\theta JA} \times P_{tot}) \tag{32}$$

The information in *Thermal Information* is based off of a standardized test metric for package and PCB thermal dissipation. The actual values may vary based on the actual PCB design used in the application.

9.2.1.2.6 Single Supply Power Dissipation Example

In this application example the device is configured for single supply operation. This configuration requires only one power supply for the DRV835x but comes at the tradeoff of increased internal power dissipation. The junction temperature is estimated in the example below.

Use 公式 11 to calculate the value of I_{VCP} and I_{VGLS} for a MOSFET gate charge of 78 nC, all 3 high-side and 3 low-side MOSFETs switching, and a switching frequency of 45 kHz.

版权 © 2018–2019, Texas Instruments Incorporated

$$I_{VCP/VGLS} = 78\ nC \times 3 \times 45\ kHz = 10.5\ mA \quad (33)$$

Use 公式 26, 公式 27, 公式 28, 公式 29, and 公式 31 to calculate the value of P_{tot} for $V_{VM} = V_{VDRAIN} = V_{VIN} = 48$ V, $I_{VM} = 9.5$ mA, $I_{VCP} = 10.5$ mA, $I_{VGLS} = 10.5$ mA, $V_{VCC} = 3.3$ V, $I_{VCC} = 100$ mA, and $\eta = 86$ %.

$$P_{VCP} = 10.5\ mA \times (48\ V + 48\ V) = 1\ W \quad (34)$$

$$P_{VGLS} = 10.5\ mA \times 48\ V = 0.5\ W \quad (35)$$

$$P_{VM} = 9.5\ mA \times 48\ V = 0.5\ W \quad (36)$$

$$P_{BUCK} = [(3.3\ V \times 100\ mA) / 0.86] – (3.3\ V \times 100\ mA) = 0.054\ W \quad (37)$$

$$P_{tot} = 1\ W + 0.5\ W + 0.5\ W + 0.054 = 2.054\ W \quad (38)$$

Lastly, to estimate the device junction temperature during operation, use 公式 32 to calculate the value of $T_J$max for $T_A$max = 60°C, $R_{\theta JA}$ = 26.6°C/W for the RGZ package, and P_{tot} = 2.054 W. Again, please note that the $R_{\theta JA}$ is highly dependent on the PCB design used in the actual application and should be verified. For more information about traditional and new thermal metrics, see the *Semiconductor and IC Package Thermal Metrics* application report.

$$T_J max = 60°C + (26.6°C/W \times 2.054\ W) = 115°C \quad (39)$$

As shown in this example, the device is within its operational limits, but is operating almost to its maximum operational junction temperature. Design care should be taken in the single supply configuration to correctly manage the power dissipation of the device.

9.2.1.2.7 Buck Regulator Configuration (DRV8350R and DRV8353R)

For a detailed design procedure and information on selecting the correct buck regulator external components, refer to *LM5008A 100-V 350-mA Constant On-Time Buck Switching Regulator*.

9.2.1.3 Application Curves

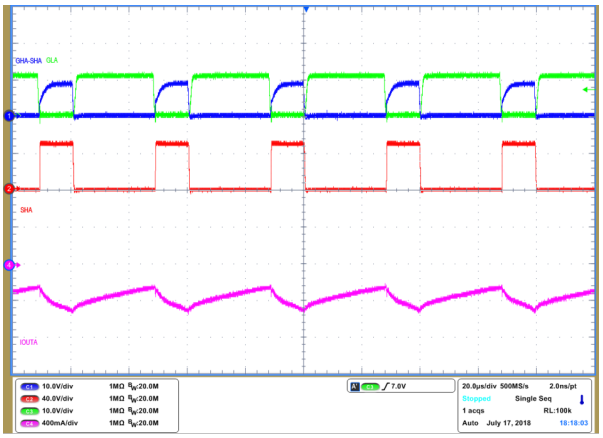

图 64. Gate Driver Operation 30% Duty Cycle

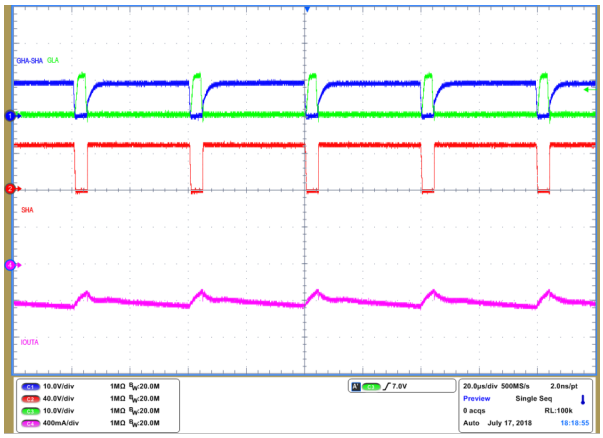

图 65. Gate Driver Operation 90% Duty Cycle

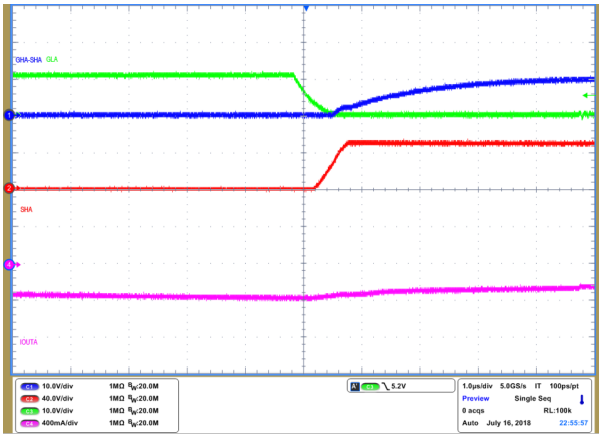

图 66. IDRIVE Minimum Setting Positive Current

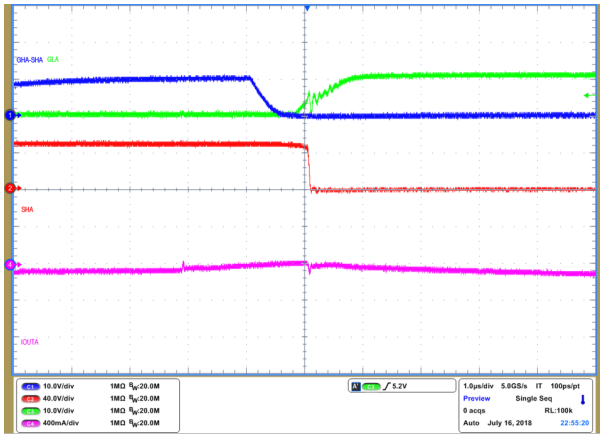

图 67. IDRIVE Minimum Setting Negative Current

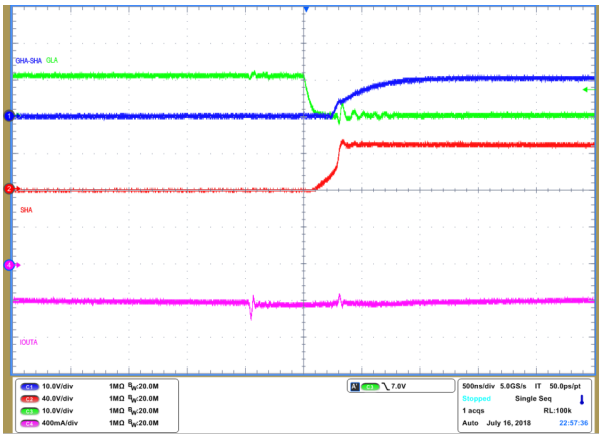

图 68. IDRIVE 300-mA and 600-mA Setting Positive Current

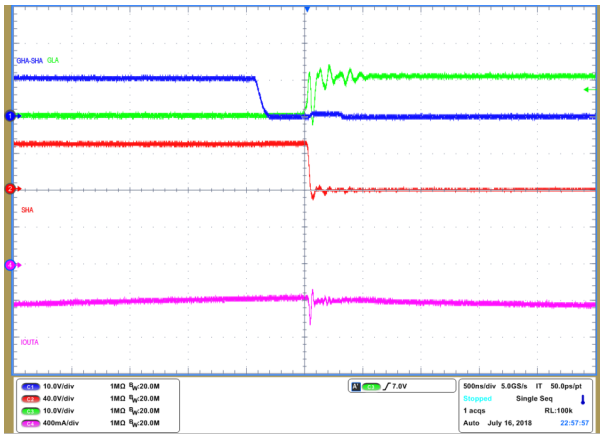

图 69. IDRIVE 300-mA and 600-mA Setting Negative Current

图 70. IDRIVE Maximum Setting Positive Current

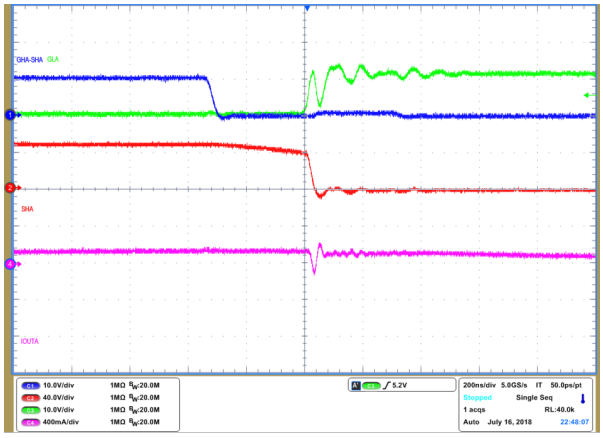

图 71. IDRIVE Maximum Setting Negative Current

版权 © 2018–2019, Texas Instruments Incorporated

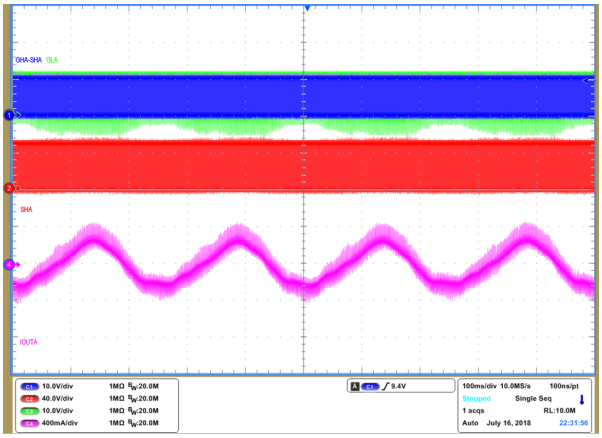

图 72. FOC Motor Commutation

9.2.2 Alternative Application

In this application, the DRV8353R is configured to use one sense amplifier in unidirectional mode for a summing current sense scheme often used in trapezoidal or hall-based BLDC commutation control. Additionally, the device is configured in dual supply mode using the integrated buck regulator for the VM gate drive voltage supply to decrease internal power dissipation.

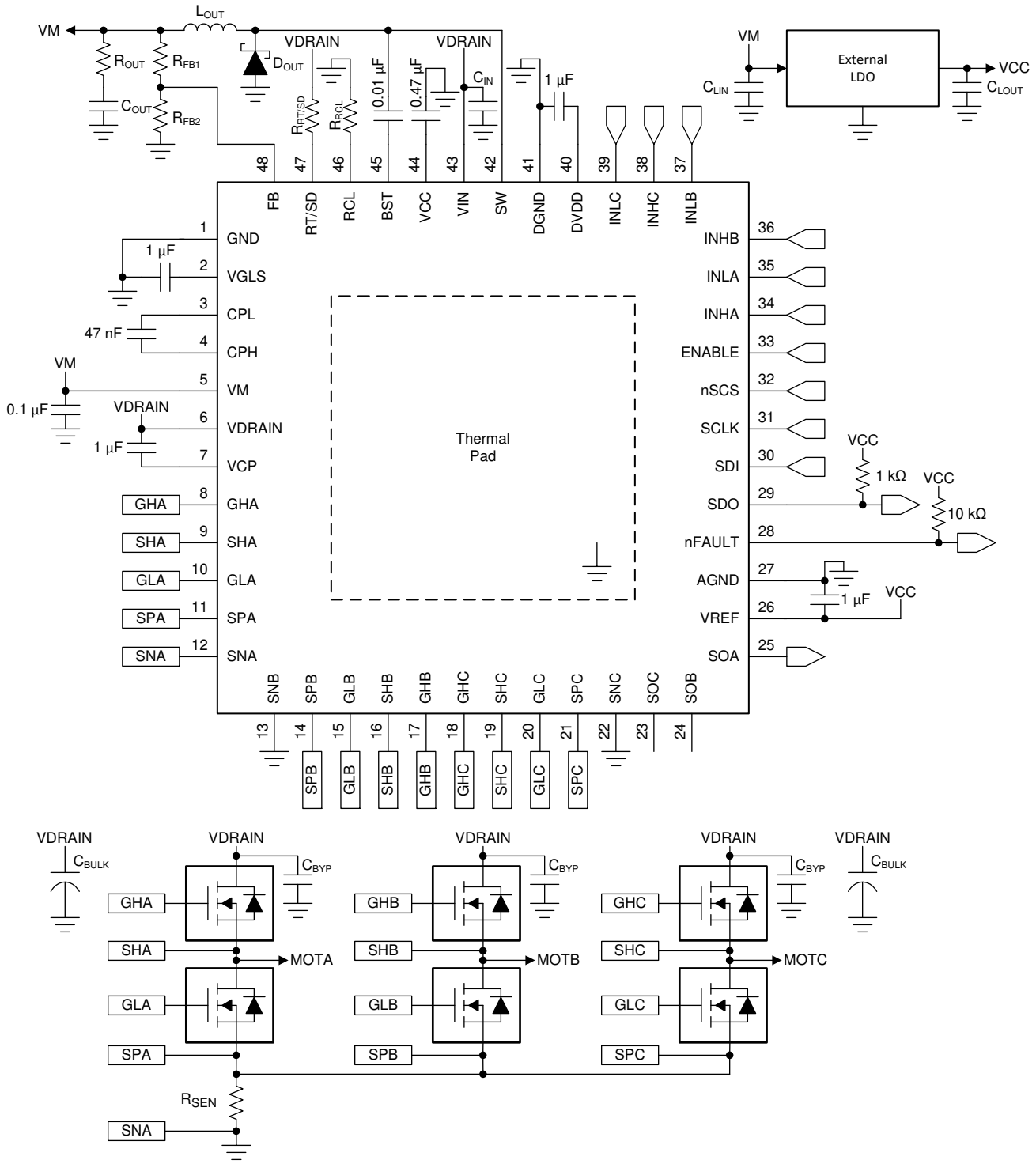

图 73. Alternative Application Schematic

版权 © 2018–2019, Texas Instruments Incorporated

9.2.2.1 Design Requirements

表 23 lists the example design input parameters for system design.

表 23. Design Parameters

EXAMPLE DESIGN PARAMETER	REFERENCE	EXAMPLE VALUE
Power supply voltage	V_{VM}	12 V
Buck supply voltage	V_{VIN}	48 V
MOSFET drain voltage	V_{VDRAIN}	48 V
MOSFET part number	MOSFET	CSD19535KCS
MOSFET total gate charge	Q_g	78 nC
PWM frequency	f_{PWM}	20 kHz
Buck regulator output voltage	V_{VCC}	12 V
Buck regulator output current	I_{VCC}	150 mA
ADC reference voltage	V_{VREF}	3.3 V
Winding sense current range	I_{SENSE}	0 to 40 A
Motor RMS current	I_{RMS}	28.3 A
Sense-resistor power rating	P_{SENSE}	3 W
System ambient temperature	T_A	–20°C to +105°C

9.2.2.2 Detailed Design Procedure

9.2.2.2.1 Sense Amplifier Unidirectional Configuration

The sense amplifiers are configured to be unidirectional through the registers on SPI devices by writing a 0 to the VREF_DIV bit.

The sense-amplifier gain and sense resistor values are selected based on the target current range, VREF, sense-resistor power rating, and operating temperature range. In unidirectional operation of the sense amplifier, use 公式 40 to calculate the approximate value of the dynamic range at the output.

$$V_O = (V_{VREF} - 0.25\ V) - 0.25\ V = V_{VREF} - 0.5\ V \tag{40}$$

Use 公式 41 to calculate the approximate value of the selected sense resistor.

$$R = \frac{V_O}{A_V \times I} \qquad P_{SENSE} > I_{RMS}^2 \times R$$

where

- $V_O = V_{VREF} - 0.5\ V$ (41)

From 公式 40 and 公式 41, select a target gain setting based on the power rating of a target sense resistor.

9.2.2.2.1.1 Sense-Amplifier Example

In this system example, the value of V_{VREF} is 3.3 V with a sense current from 0 to 40 A. The linear range of the SOx output for the DRV8353x device is 0.25 V to V_{VREF} – 0.25 V (from the V_{LINEAR} specification). The differential range of the sense-amplifier input is –0.3 to +0.3 V (V_{DIFF}).

$$V_O = 3.3\ V - 0.5\ V = 2.8\ V \tag{42}$$

$$R = \frac{2.8\ V}{A_V \times 40\ A} \qquad 3\ W > 28.3^2 \times R \rightarrow R < 3.75\ m\Omega \tag{43}$$

$$3.75\ m\Omega > \frac{2.8\ V}{A_V \times 40\ A} \rightarrow A_V > 18.7 \tag{44}$$

Therefore, the gain setting must be selected as 20 V/V or 40 V/V and the value of the sense resistor must be less than 3.75 mΩ to meet the power requirement for the sense resistor. For this example, the gain setting was selected as 20 V/V. The value of the resistor and worst-case current can be verified that R < 3.75 mΩ and I_{max} = 40 A does not violate the differential range specification of the sense amplifier input (V_{SPxD}).

9.2.2.2.1.2 Dual Supply Power Dissipation

Design care must be taken to make sure that the thermal ratings of the DRV835x are not violated during normal operation of the device. The is especially critical in higher voltage and higher ambient operation applications where power dissipation or the device ambient temperature are increased.

To determine the temperature of the device in dual supply operation, first the internal power dissipation must be calculated. The internal power dissipation has four primary components:

- VCP Charge pump power dissipation (P_{VCP})
- VGLS low-side regulator power dissipation (P_{VGLS})
- VM device nominal power dissipation (P_{VM})
- VIN buck regulator power dissipation (P_{BUCK})

The value of P_{VCP} and P_{VGLS} can be approximated by referring to *External MOSFET Support* to first determine I_{VCP} and I_{VGLS} and then referring to 公式 45 and 公式 46.

$$P_{VCP} = I_{VCP} \times (V_{VM} + V_{VDRAIN}) \quad (45)$$

$$P_{VGLS} = I_{VGLS} \times V_{VM} \quad (46)$$

The value of P_{VM} can be calculated by referring to the datasheet parameter for I_{VM} current and 公式 47.

$$P_{VM} = I_{VM} \times V_{VM} \quad (47)$$

$$P_{BUCK} = (P_O / \eta) - P_O$$

where

$$P_O = V_{VCC} \times I_{VCC} \quad (49) \quad (49)$$

The value of P_{BUCK} can be calculated with the buck output voltage (V_{VCC}), buck output current (I_{VCC}), and by referring to the typical characteristic curve for efficiency (η) in the LM5008A data sheet.

The total power dissipation is then calculated by summing the four components as shown in 公式 50.

$$P_{tot} = P_{VCP} + P_{VGLS} + P_{VM} + P_{BUCK} \quad (50)$$

Lastly, the device junction temperature can be estimate by referring to the *Thermal Information* and 公式 51.

$$T_J max = T_A max + (R_{\theta JA} \times P_{tot}) \quad (51)$$

Note that the information in the *Thermal Information* is based off of a standardized test metric for package and PCB thermal dissipation. The actual values may vary based on the actual PCB design used in the application.

9.2.2.2.1.3 Dual Supply Power Dissipation Example

In this application example the device is configured for dual supply operation. dual supply operation helps to decrease the internal power dissipation by providing the gate driver with a lower supply voltage. This can be derived from the internal buck regulator or an external power supply. The junction temperature is estimated in the example below.

Use 公式 11 to calculate the value of I_{VCP} and I_{VGLS} for a MOSFET gate charge of 78 nC, 1 high-side and 1 low-side MOSFETs switch at a time, and a switching frequency of 20 kHz.

$$I_{VCP/VGLS} = 78\ nC \times 1 \times 20\ kHz = 1.56\ mA \quad (52)$$

Use equation 公式 45, 公式 46, 公式 47, 公式 48, and 公式 50 to calculate the value of P_{tot} for V_{VM} = 12 V, V_{VDRAIN} = 48 V, V_{VIN} = 48 V, I_{VM} = 9.5 mA, I_{VCP} = 1.56 mA, I_{VGLS} = 1.56 mA, V_{VCC} = 12 V, I_{VCC} = 150 mA, and η = 86 %.

$$P_{VCP} = 1.56\ mA \times (12\ V + 48\ V) = 0.1\ W \quad (53)$$

$$P_{VGLS} = 1.56\ mA \times 12\ V = 0.02\ W \quad (54)$$

$$P_{VM} = 9.5\ mA \times 12\ V = 0.1\ W \quad (55)$$

$$P_{BUCK} = [(12\ V \times 150\ mA) / 0.86] - (12\ V \times 150\ mA) = 0.29\ W \quad (56)$$

$$P_{tot} = 0.1\ W + 0.02\ W + 0.1\ W + 0.29 = 0.51\ W \quad (57)$$

版权 © 2018–2019, Texas Instruments Incorporated

Lastly, to estimate the device junction temperature during operation, use 公式 51 to calculate the value of $T_J$max for $T_A$max = 105°C, $R_{\theta JA}$ = 26.6°C/W for the RGZ package, and P_{tot} = 0.51 W. Again, note that the $R_{\theta JA}$ is highly dependent on the PCB design used in the actual application and should be verified. For more information about traditional and new thermal metrics, refer to the *Semiconductor and IC Package Thermal Metrics* application report.

$$T_J\text{max} = 105°\text{C} + (26.6°\text{C/W} \times 0.51\ \text{W}) = 119°\text{C} \tag{58}$$

10 Power Supply Recommendations

The DRV835x family of devices are designed to operate from an input voltage supply (VM) range between 9 V and 75 V. A 0.1-µF ceramic capacitor rated for VM must be placed as near to the device as possible. In addition, a bulk capacitor must be included on the VM pin but can be shared with the bulk bypass capacitance for the external power MOSFETs. Additional bulk capacitance is required to bypass the external half-bridge MOSFETs and should be sized according to the application requirements.

10.1 Bulk Capacitance Sizing

Having appropriate local bulk capacitance is an important factor in motor drive system design. It is usually beneficial to have more bulk capacitance, while the disadvantages are increased cost and physical size. The amount of local capacitance depends on a variety of factors including:

- The highest current required by the motor system
- The power supply's type, capacitance, and ability to source current
- The amount of parasitic inductance between the power supply and motor system
- The acceptable supply voltage ripple
- Type of motor (brushed DC, brushless DC, stepper)
- The motor startup and braking methods

The inductance between the power supply and motor drive system will limit the rate current can change from the power supply. If the local bulk capacitance is too small, the system will respond to excessive current demands or dumps from the motor with a change in voltage. When adequate bulk capacitance is used, the motor voltage stays stable and high current can be quickly supplied.

The data sheet provides a recommended minimum value, but system level testing is required to determine the appropriate sized bulk capacitor.

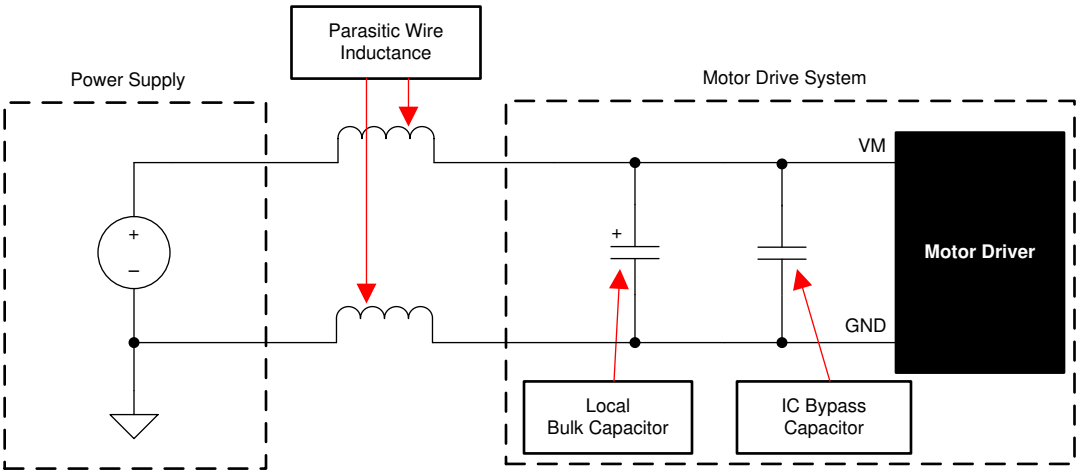

图 74. Motor Drive Supply Parasitics Example

11 Layout

11.1 Layout Guidelines

Bypass the VM pin to the GND pin using a low-ESR ceramic bypass capacitor with a recommended value of 0.1 µF. Place this capacitor as near to the VM pin as possible with a thick trace or ground plane connected to the GND pin. Additionally, bypass the VM pin using a bulk capacitor rated for VM. This component can be electrolytic. This capacitance must be at least 10 µF.

Additional bulk capacitance is required to bypass the high current path on the external MOSFETs. This bulk capacitance should be placed such that it minimizes the length of any high current paths through the external MOSFETs. The connecting metal traces should be as wide as possible, with numerous vias connecting PCB layers. These practices minimize inductance and allow the bulk capacitor to deliver high current.

Place a low-ESR ceramic capacitor between the CPL and CPH pins. This capacitor should be 47 nF, rated for VDRAIN, and be of type X5R or X7R. Additionally, place a low-ESR ceramic capacitor between the VCP and VDRAIN pins and VGLS and GNDs. These capacitors should be 1 µF, rated for 16 V, and be of type X5R or X7R.

Bypass the DVDD pin to the GND/DGND pin with a 1-µF low-ESR ceramic capacitor rated for 6.3 V and of type X5R or X7R. Place this capacitor as near to the pin as possible and minimize the path from the capacitor to the GND/DGND pin.

The VDRAIN pin can be shorted directly to the VM pin for single supply application configurations. However, if a significant distance is between the device and the external MOSFETs, use a dedicated trace to connect to the common point of the drains of the high-side external MOSFETs. Do not connect the SLx pins directly to GND. Instead, use dedicated traces to connect these pins to the sources of the low-side external MOSFETs. These recommendations allow for more accurate V_{DS} sensing of the external MOSFETs for overcurrent detection.

Minimize the loop length for the high-side and low-side gate drivers. The high-side loop is from the GHx pin of the device to the high-side power MOSFET gate, then follows the high-side MOSFET source back to the SHx pin. The low-side loop is from the GLx pin of the device to the low-side power MOSFET gate, then follows the low-side MOSFET source back to the SPx/SLx pins.

11.1.1 Buck-Regulator Layout Guidelines

Layout is a critical portion of good power supply design. The following guidelines will help users design a PCB with the best power conversion performance, thermal performance, and minimized generation of unwanted EMI:

- Put the feedback network resistors near the FB pin and away from the inductor to minimize coupling noise into the feedback pin.
- Put the input bypass capacitor near the VIN pin to decrease copper trace resistance which effects input voltage ripple of the device.
- Put the inductor near the SW pin to decrease magnetic and electrostatic noise.
- Put the output capacitor near the junction of the inductor and the diode. The inductor, diode, and C_{OUT} trace should be as short as possible to decrease conducted and radiated noise and increase overall efficiency.
- Make the ground connection for the diode, C_{VIN}, and C_{OUT} as small as possible and tie it to the system ground plane in only one spot (preferably at the C_{OUT} ground point) to minimize conducted noise in the system ground plane.

For more detail on switching power supply layout considerations refer to the *AN-1149 Layout Guidelines for Switching Power Supplies* application report.

版权 © 2018–2019, Texas Instruments Incorporated

11.2 Layout Example

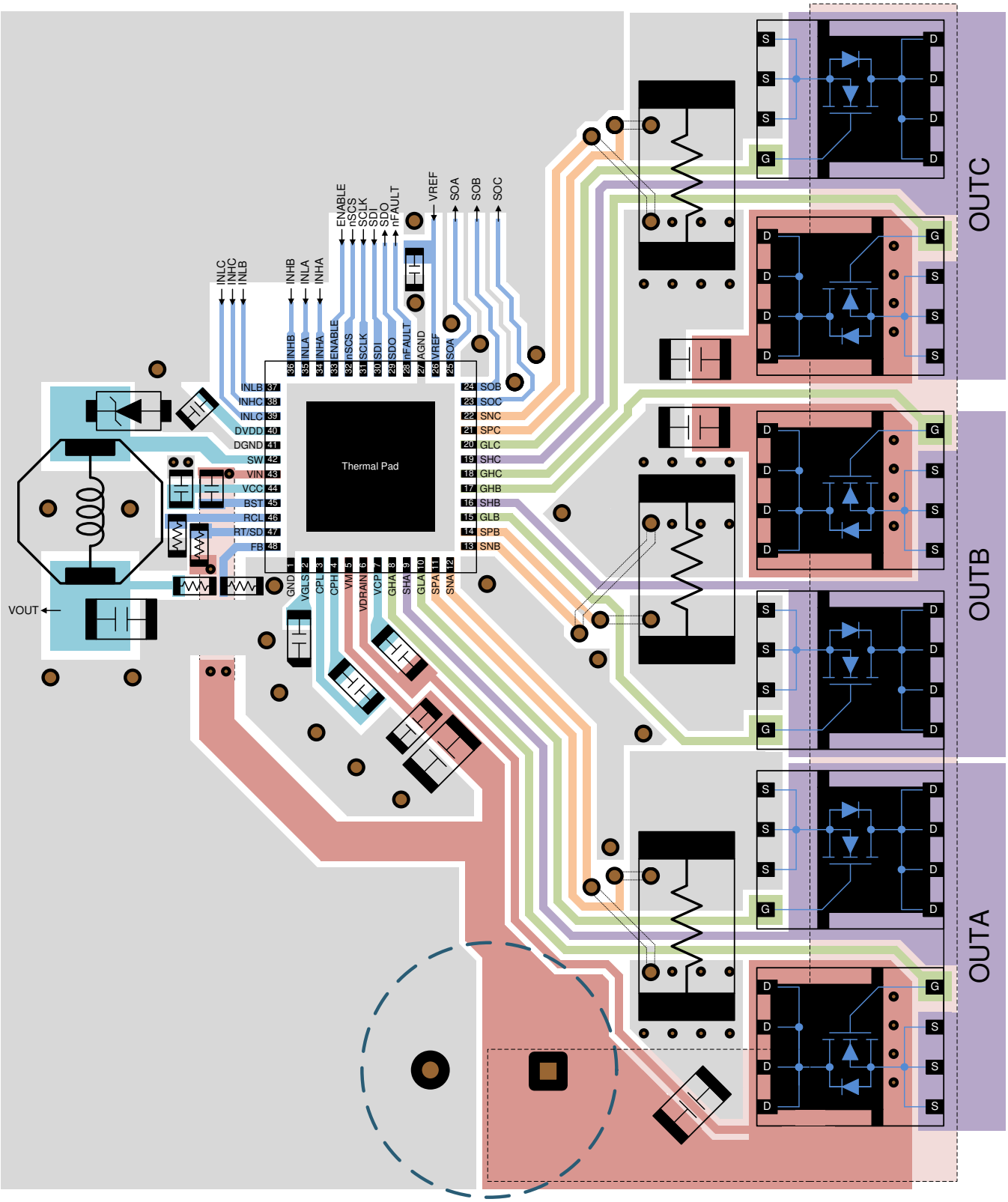

图 75. Layout Example

12 器件和文档支持

12.1 器件支持

12.1.1 器件命名规则

下图显示了说明完整器件名称的图例：

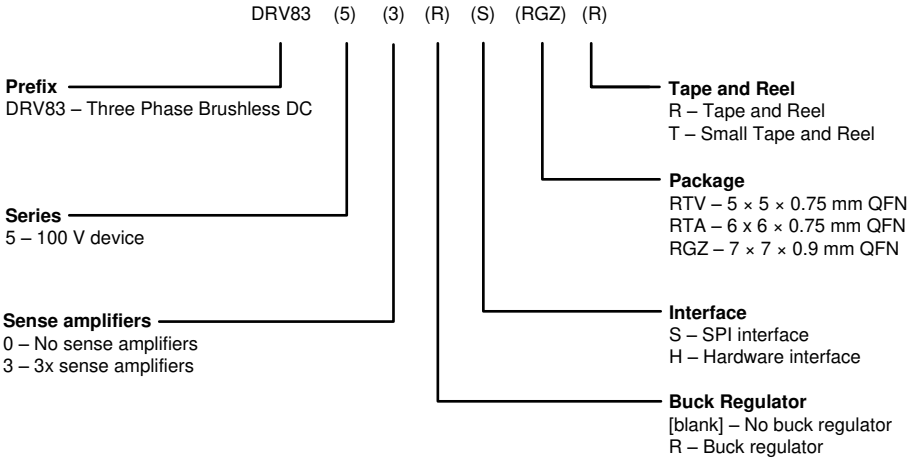

12.2 文档支持

12.2.1 相关文档

有关相关文档，请参阅：

- 德州仪器 (TI)，*《DRV8353Rx-EVM 用户指南》*
- 德州仪器 (TI)，*《DRV8353Rx-EVM GUI 用户指南》*
- 德州仪器 (TI)，*《DRV8353Rx-EVM InstaSPIN™ 软件快速入门指南》*
- 德州仪器 (TI)，*《LM5008A 100V 350mA 恒定导通时间降压开关稳压器》* 产品说明书
- 德州仪器 (TI)，*《CSD19535KCS 100V N 通道 NexFET™ 功率 MOSFET》* 产品说明书
- 德州仪器 (TI)，*《TI 电机栅极驱动器的 IDRIVE 和 TDRIVE 认知》*应用报告
- 德州仪器 (TI)，*《采用 TI 智能栅极驱动技术进行电机驱动保护》*TI 技术手册
- 德州仪器 (TI)，*《采用 TI 智能栅极驱动技术缩减电机驱动 BOM 和 PCB 面积》*TI 技术手册
- 德州仪器 (TI)，*《采用 TI 智能栅极驱动技术降低 EMI 辐射发射》*TI 技术手册
- 德州仪器 (TI)，*《采用 BLDC 电机的高效真空吸尘器硬件设计注意事项》*
- 德州仪器 (TI)，*《采用 BLDC 电机的电动自行车硬件设计注意事项》*
- 德州仪器 (TI)，*《工业电机驱动解决方案指南》*
- 德州仪器 (TI)，*《开关电源布局指南》*应用报告
- 德州仪器 (TI)，*《QFN/SON PCB 连接》*应用报告
- 德州仪器 (TI)，*《采用 MSP430™ 的传感器式三相 BLDC 电机控制》*应用报告
- 德州仪器 (TI)，*《AN-1149 开关电源布局指南》*应用报告

版权 © 2018–2019, Texas Instruments Incorporated

12.3 相关链接

下表列出了快速访问链接。类别包括技术文档、支持和社区资源、工具和软件，以及立即订购快速访问。

表 **24.** 相关链接

器件	产品文件夹	立即订购	技术文档	工具与软件	支持和社区
DRV8350	请单击此处	请单击此处	请单击此处	请单击此处	请单击此处
DRV8350R	请单击此处	请单击此处	请单击此处	请单击此处	请单击此处
DRV8353	请单击此处	请单击此处	请单击此处	请单击此处	请单击此处
DRV8353R	请单击此处	请单击此处	请单击此处	请单击此处	请单击此处

12.4 接收文档更新通知

要接收文档更新通知，请导航至 TI.com.cn 上的器件产品文件夹。单击右上角的*通知我* 进行注册，即可每周接收产品信息更改摘要。有关更改的详细信息，请查看任何已修订文档中包含的修订历史记录。

12.5 社区资源

The following links connect to TI community resources. Linked contents are provided "AS IS" by the respective contributors. They do not constitute TI specifications and do not necessarily reflect TI's views; see TI's Terms of Use.

TI E2E™ Online Community ***TI's Engineer-to-Engineer (E2E) Community.*** Created to foster collaboration among engineers. At e2e.ti.com, you can ask questions, share knowledge, explore ideas and help solve problems with fellow engineers.

Design Support ***TI's Design Support*** Quickly find helpful E2E forums along with design support tools and contact information for technical support.

12.6 商标

NexFET, InstaSPIN, MSP430, E2E are trademarks of Texas Instruments.
All other trademarks are the property of their respective owners.

12.7 静电放电警告

ESD 可能会损坏该集成电路。德州仪器 (TI) 建议通过适当的预防措施处理所有集成电路。如果不遵守正确的处理措施和安装程序，可能会损坏集成电路。

ESD 的损坏小至导致微小的性能降级，大至整个器件故障。 精密的集成电路可能更容易受到损坏，这是因为非常细微的参数更改都可能会导致器件与其发布的规格不相符。

12.8 Glossary

SLYZ022 — *TI Glossary*.

This glossary lists and explains terms, acronyms, and definitions.

13 机械、封装和可订购信息

以下页面包含机械、封装和可订购信息。这些信息是指定器件的最新可用数据。数据如有变更，恕不另行通知，且不会对此文档进行修订。如需获取此数据表的浏览器版本，请查阅左侧的导航栏。

重要声明和免责声明

TI 均以“原样”提供技术性及可靠性数据（包括数据表）、设计资源（包括参考设计）、应用或其他设计建议、网络工具、安全信息和其他资源，不保证其中不含任何瑕疵，且不做任何明示或暗示的担保，包括但不限于对适销性、适合某特定用途或不侵犯任何第三方知识产权的暗示担保。

所述资源可供专业开发人员应用TI 产品进行设计使用。您将对以下行为独自承担全部责任：(1) 针对您的应用选择合适的TI 产品；(2) 设计、验证并测试您的应用；(3) 确保您的应用满足相应标准以及任何其他安全、安保或其他要求。所述资源如有变更，恕不另行通知。TI 对您使用所述资源的授权仅限于开发资源所涉及TI 产品的相关应用。除此之外不得复制或展示所述资源，也不提供其它TI或任何第三方的知识产权授权许可。如因使用所述资源而产生任何索赔、赔偿、成本、损失及债务等，TI对此概不负责，并且您须赔偿由此对TI 及其代表造成的损害。

TI 所提供产品均受TI 的销售条款 (http://www.ti.com.cn/zh-cn/legal/termsofsale.html) 以及ti.com.cn上或随附TI产品提供的其他可适用条款的约束。TI提供所述资源并不扩展或以其他方式更改TI 针对TI 产品所发布的可适用的担保范围或担保免责声明。

邮寄地址：上海市浦东新区世纪大道 1568 号中建大厦 32 楼，邮政编码：200122
Copyright © 2019 德州仪器半导体技术（上海）有限公司

PACKAGING INFORMATION

Orderable Device	Status (1)	Package Type	Package Drawing	Pins	Package Qty	Eco Plan (2)	Lead finish/ Ball material (6)	MSL Peak Temp (3)	Op Temp (°C)	Device Marking (4/5)	Samples
DRV8350HRTVR	ACTIVE	WQFN	RTV	32	3000	RoHS & Green	NIPDAU	Level-2-260C-1 YEAR	-40 to 125	DRV8350H	Samples
DRV8350HRTVT	ACTIVE	WQFN	RTV	32	250	RoHS & Green	NIPDAU	Level-2-260C-1 YEAR	-40 to 125	DRV8350H	Samples
DRV8350RHRGZR	ACTIVE	VQFN	RGZ	48	2500	RoHS & Green	NIPDAUAG	Level-2-260C-1 YEAR	-40 to 125	DRV8350RH	Samples
DRV8350RHRGZT	ACTIVE	VQFN	RGZ	48	250	RoHS & Green	NIPDAUAG	Level-2-260C-1 YEAR	-40 to 125	DRV8350RH	Samples
DRV8350RSRGZR	ACTIVE	VQFN	RGZ	48	2500	RoHS & Green	NIPDAUAG	Level-2-260C-1 YEAR	-40 to 125	DRV8350RS	Samples
DRV8350RSRGZT	ACTIVE	VQFN	RGZ	48	250	RoHS & Green	NIPDAUAG	Level-2-260C-1 YEAR	-40 to 125	DRV8350RS	Samples
DRV8350SRTVR	ACTIVE	WQFN	RTV	32	3000	RoHS & Green	NIPDAU	Level-2-260C-1 YEAR	-40 to 125	DRV8350S	Samples
DRV8350SRTVT	ACTIVE	WQFN	RTV	32	250	RoHS & Green	NIPDAU	Level-2-260C-1 YEAR	-40 to 125	DRV8350S	Samples
DRV8353HRTAR	ACTIVE	WQFN	RTA	40	2000	RoHS & Green	NIPDAU	Level-2-260C-1 YEAR	-40 to 125	DRV8353H	Samples
DRV8353HRTAT	ACTIVE	WQFN	RTA	40	250	RoHS & Green	NIPDAU	Level-2-260C-1 YEAR	-40 to 125	DRV8353H	Samples
DRV8353RHRGZR	ACTIVE	VQFN	RGZ	48	2500	RoHS & Green	NIPDAUAG	Level-2-260C-1 YEAR	-40 to 125	DRV8353RH	Samples
DRV8353RHRGZT	ACTIVE	VQFN	RGZ	48	250	RoHS & Green	NIPDAUAG	Level-2-260C-1 YEAR	-40 to 125	DRV8353RH	Samples
DRV8353RSRGZR	ACTIVE	VQFN	RGZ	48	2500	RoHS & Green	NIPDAUAG	Level-2-260C-1 YEAR	-40 to 125	DRV8353RS	Samples
DRV8353RSRGZT	ACTIVE	VQFN	RGZ	48	250	RoHS & Green	NIPDAUAG	Level-2-260C-1 YEAR	-40 to 125	DRV8353RS	Samples
DRV8353SRTAR	ACTIVE	WQFN	RTA	40	2000	RoHS & Green	NIPDAU	Level-2-260C-1 YEAR	-40 to 125	DRV8353S	Samples
DRV8353SRTAT	ACTIVE	WQFN	RTA	40	250	RoHS & Green	NIPDAU	Level-2-260C-1 YEAR	-40 to 125	DRV8353S	Samples

(1) The marketing status values are defined as follows:
ACTIVE: Product device recommended for new designs.
LIFEBUY: TI has announced that the device will be discontinued, and a lifetime-buy period is in effect.
NRND: Not recommended for new designs. Device is in production to support existing customers, but TI does not recommend using this part in a new design.
PREVIEW: Device has been announced but is not in production. Samples may or may not be available.
OBSOLETE: TI has discontinued the production of the device.

(2) **RoHS:** TI defines "RoHS" to mean semiconductor products that are compliant with the current EU RoHS requirements for all 10 RoHS substances, including the requirement that RoHS substance do not exceed 0.1% by weight in homogeneous materials. Where designed to be soldered at high temperatures, "RoHS" products are suitable for use in specified lead-free processes. TI may reference these types of products as "Pb-Free".
RoHS Exempt: TI defines "RoHS Exempt" to mean products that contain lead but are compliant with EU RoHS pursuant to a specific EU RoHS exemption.
Green: TI defines "Green" to mean the content of Chlorine (Cl) and Bromine (Br) based flame retardants meet JS709B low halogen requirements of <=1000ppm threshold. Antimony trioxide based flame retardants must also meet the <=1000ppm threshold requirement.

(3) MSL, Peak Temp. - The Moisture Sensitivity Level rating according to the JEDEC industry standard classifications, and peak solder temperature.

(4) There may be additional marking, which relates to the logo, the lot trace code information, or the environmental category on the device.

(5) Multiple Device Markings will be inside parentheses. Only one Device Marking contained in parentheses and separated by a "~" will appear on a device. If a line is indented then it is a continuation of the previous line and the two combined represent the entire Device Marking for that device.

(6) Lead finish/Ball material - Orderable Devices may have multiple material finish options. Finish options are separated by a vertical ruled line. Lead finish/Ball material values may wrap to two lines if the finish value exceeds the maximum column width.

Important Information and Disclaimer: The information provided on this page represents TI's knowledge and belief as of the date that it is provided. TI bases its knowledge and belief on information provided by third parties, and makes no representation or warranty as to the accuracy of such information. Efforts are underway to better integrate information from third parties. TI has taken and continues to take reasonable steps to provide representative and accurate information but may not have conducted destructive testing or chemical analysis on incoming materials and chemicals. TI and TI suppliers consider certain information to be proprietary, and thus CAS numbers and other limited information may not be available for release.

In no event shall TI's liability arising out of such information exceed the total purchase price of the TI part(s) at issue in this document sold by TI to Customer on an annual basis.

TAPE AND REEL INFORMATION

REEL DIMENSIONS

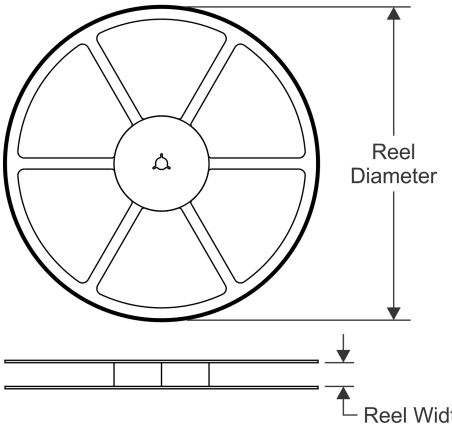

TAPE DIMENSIONS

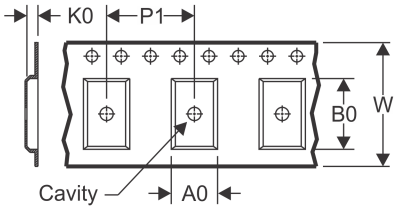

A0	Dimension designed to accommodate the component width
B0	Dimension designed to accommodate the component length
K0	Dimension designed to accommodate the component thickness
W	Overall width of the carrier tape
P1	Pitch between successive cavity centers

QUADRANT ASSIGNMENTS FOR PIN 1 ORIENTATION IN TAPE

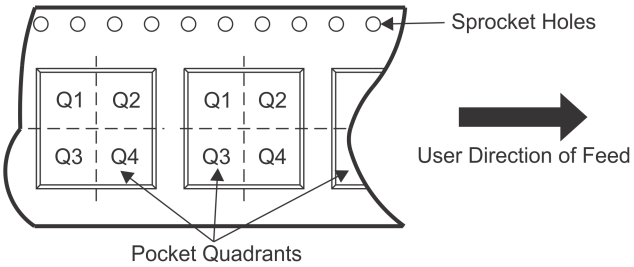

*All dimensions are nominal

Device	Package Type	Package Drawing	Pins	SPQ	Reel Diameter (mm)	Reel Width W1 (mm)	A0 (mm)	B0 (mm)	K0 (mm)	P1 (mm)	W (mm)	Pin1 Quadrant
DRV8350HRTVR	WQFN	RTV	32	3000	330.0	12.4	5.3	5.3	1.1	8.0	12.0	Q2
DRV8350HRTVT	WQFN	RTV	32	250	180.0	12.4	5.3	5.3	1.1	8.0	12.0	Q2
DRV8350RHRGZR	VQFN	RGZ	48	2500	330.0	16.4	7.25	7.25	1.1	12.0	16.0	Q2
DRV8350RHRGZT	VQFN	RGZ	48	250	330.0	16.4	7.25	7.25	1.1	12.0	16.0	Q2
DRV8350RSRGZR	VQFN	RGZ	48	2500	330.0	16.4	7.25	7.25	1.1	12.0	16.0	Q2
DRV8350RSRGZT	VQFN	RGZ	48	250	330.0	16.4	7.25	7.25	1.1	12.0	16.0	Q2
DRV8350SRTVR	WQFN	RTV	32	3000	330.0	12.4	5.3	5.3	1.1	8.0	12.0	Q2
DRV8350SRTVT	WQFN	RTV	32	250	180.0	12.4	5.3	5.3	1.1	8.0	12.0	Q2
DRV8353HRTAR	WQFN	RTA	40	2000	330.0	16.4	6.3	6.3	1.1	12.0	16.0	Q2
DRV8353HRTAT	WQFN	RTA	40	250	180.0	16.4	6.3	6.3	1.1	12.0	16.0	Q2
DRV8353RHRGZR	VQFN	RGZ	48	2500	330.0	16.4	7.25	7.25	1.1	12.0	16.0	Q2
DRV8353RHRGZT	VQFN	RGZ	48	250	330.0	16.4	7.25	7.25	1.1	12.0	16.0	Q2
DRV8353RSRGZR	VQFN	RGZ	48	2500	330.0	16.4	7.25	7.25	1.1	12.0	16.0	Q2
DRV8353RSRGZT	VQFN	RGZ	48	250	330.0	16.4	7.25	7.25	1.1	12.0	16.0	Q2
DRV8353SRTAR	WQFN	RTA	40	2000	330.0	16.4	6.3	6.3	1.1	12.0	16.0	Q2
DRV8353SRTAT	WQFN	RTA	40	250	180.0	16.4	6.3	6.3	1.1	12.0	16.0	Q2

TAPE AND REEL BOX DIMENSIONS

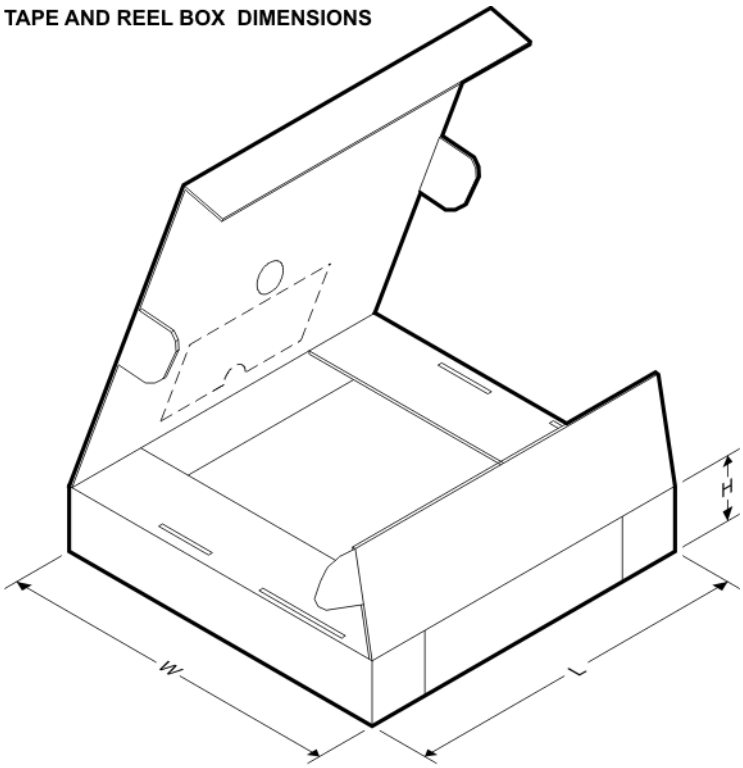

*All dimensions are nominal

Device	Package Type	Package Drawing	Pins	SPQ	Length (mm)	Width (mm)	Height (mm)
DRV8350HRTVR	WQFN	RTV	32	3000	367.0	367.0	35.0
DRV8350HRTVT	WQFN	RTV	32	250	210.0	185.0	35.0
DRV8350RHRGZR	VQFN	RGZ	48	2500	338.0	355.0	50.0
DRV8350RHRGZT	VQFN	RGZ	48	250	338.0	355.0	50.0
DRV8350RSRGZR	VQFN	RGZ	48	2500	338.0	355.0	50.0
DRV8350RSRGZT	VQFN	RGZ	48	250	338.0	355.0	50.0
DRV8350SRTVR	WQFN	RTV	32	3000	367.0	367.0	35.0
DRV8350SRTVT	WQFN	RTV	32	250	210.0	185.0	35.0
DRV8353HRTAR	WQFN	RTA	40	2000	367.0	367.0	35.0
DRV8353HRTAT	WQFN	RTA	40	250	210.0	185.0	35.0
DRV8353RHRGZR	VQFN	RGZ	48	2500	338.0	355.0	50.0
DRV8353RHRGZT	VQFN	RGZ	48	250	338.0	355.0	50.0
DRV8353RSRGZR	VQFN	RGZ	48	2500	338.0	355.0	50.0
DRV8353RSRGZT	VQFN	RGZ	48	250	338.0	355.0	50.0
DRV8353SRTAR	WQFN	RTA	40	2000	367.0	367.0	35.0
DRV8353SRTAT	WQFN	RTA	40	250	210.0	185.0	35.0

RTV (S-PWQFN-N32) PLASTIC QUAD FLATPACK NO-LEAD

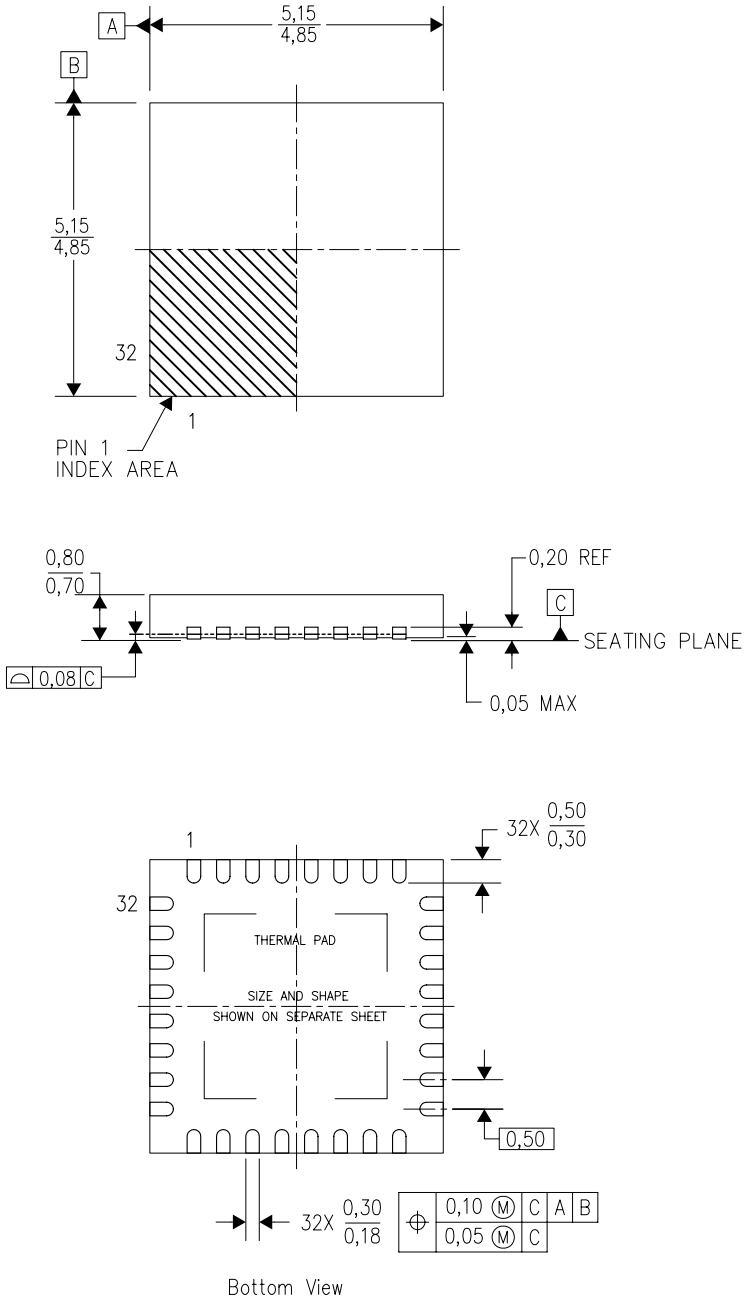

4206245/C 10/11

NOTES:
A. All linear dimensions are in millimeters. Dimensioning and tolerancing per ASME Y14.5-1994.
B. This drawing is subject to change without notice.
C. Quad Flatpack, No-Leads (QFN) package configuration.
D. The package thermal pad must be soldered to the board for thermal and mechanical performance.
E. See the additional figure in the Product Data Sheet for details regarding the exposed thermal pad features and dimensions.
F. Falls within JEDEC MO-220.

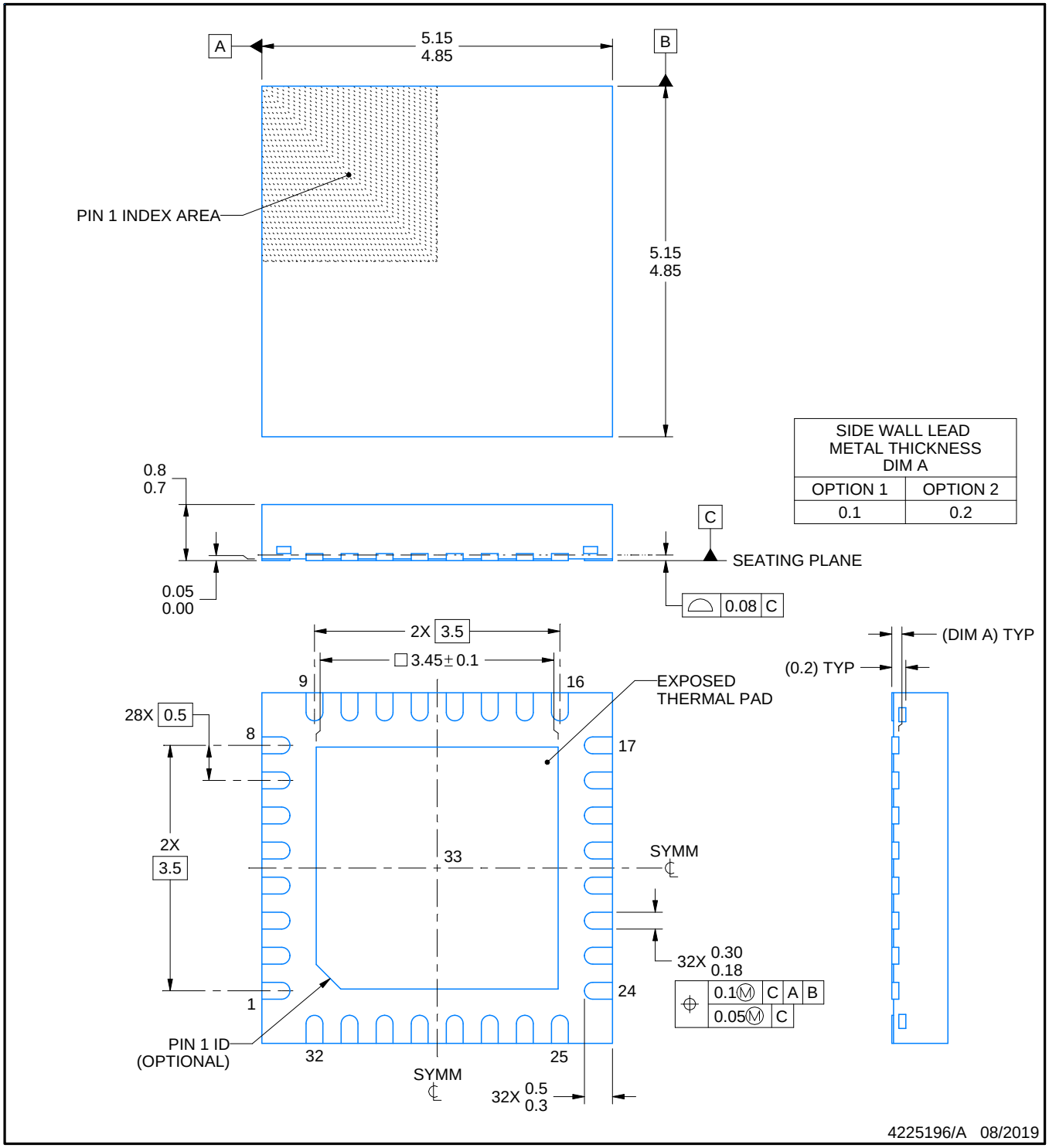

SIDE WALL LEAD METAL THICKNESS DIM A	
OPTION 1	OPTION 2
0.1	0.2

NOTES:

1. All linear dimensions are in millimeters. Any dimensions in parenthesis are for reference only. Dimensioning and tolerancing per ASME Y14.5M.
2. This drawing is subject to change without notice.
3. The package thermal pad must be soldered to the printed circuit board for thermal and mechanical performance.

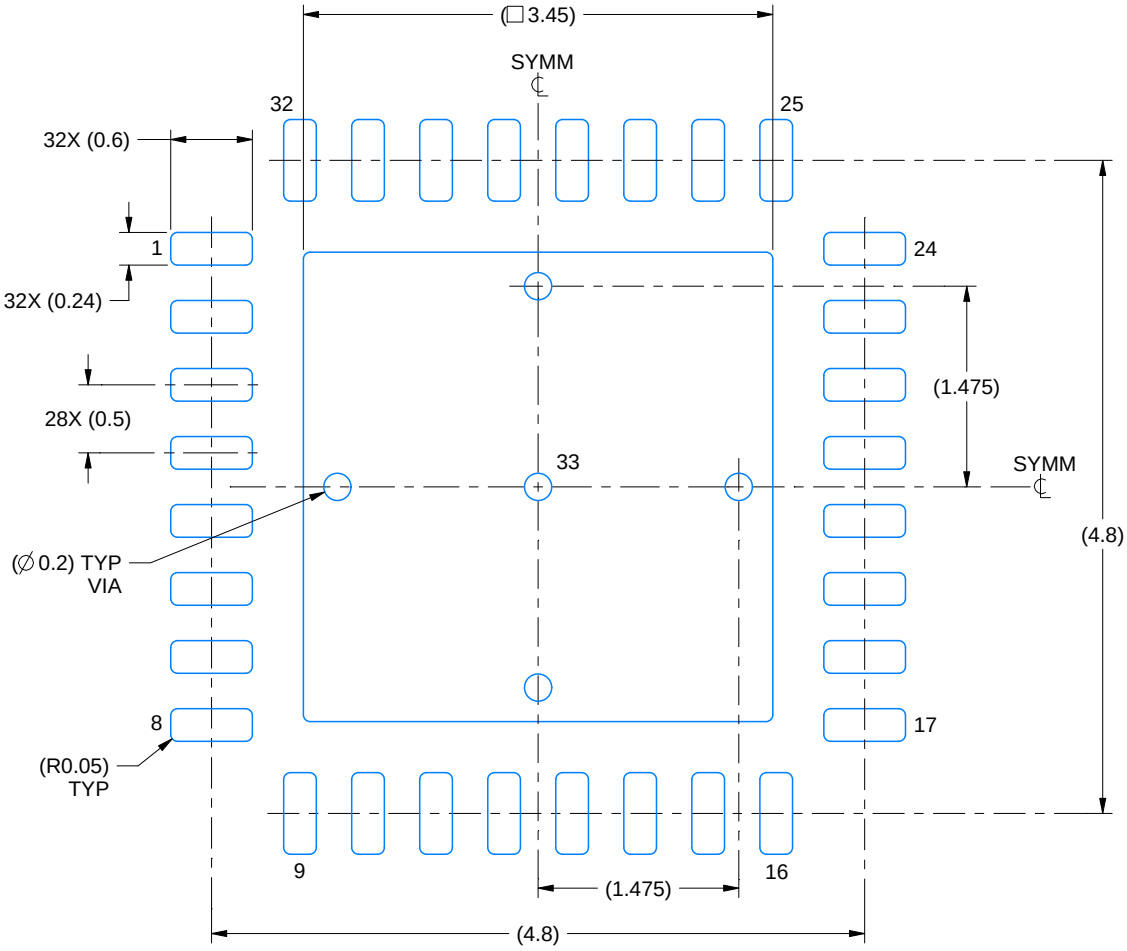

LAND PATTERN EXAMPLE
SCALE:18X

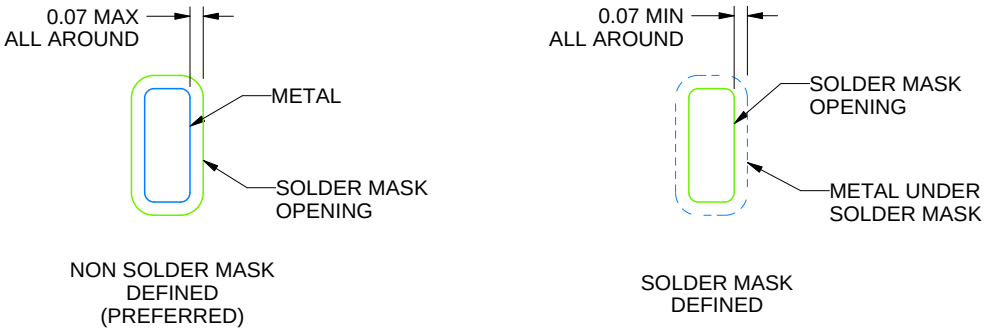

SOLDER MASK DETAILS

4225196/A 08/2019

NOTES: (continued)

4. This package is designed to be soldered to a thermal pad on the board. For more information, see Texas Instruments literature number SLUA271 (www.ti.com/lit/slua271).
5. Vias are optional depending on application, refer to device data sheet. If any vias are implemented, refer to their locations shown on this view. It is recommended that vias under paste be filled, plugged or tented.

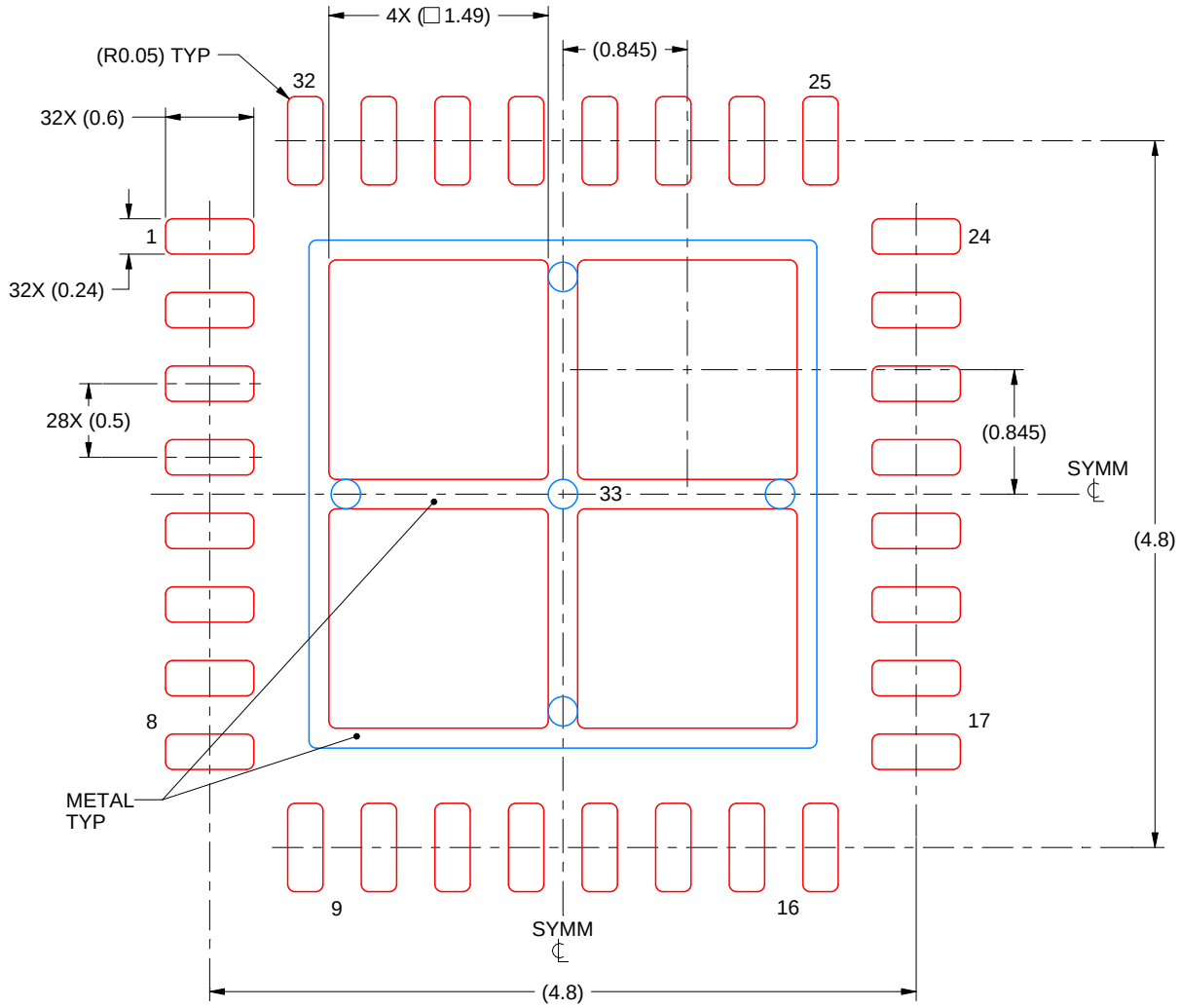

SOLDER PASTE EXAMPLE
BASED ON 0.125 mm THICK STENCIL

EXPOSED PAD 33:
75% PRINTED SOLDER COVERAGE BY AREA UNDER PACKAGE
SCALE:20X

4225196/A 08/2019

NOTES: (continued)

6. Laser cutting apertures with trapezoidal walls and rounded corners may offer better paste release. IPC-7525 may have alternate design recommendations.

GENERIC PACKAGE VIEW

RGZ 48

VQFN - 1 mm max height

7 x 7, 0.5 mm pitch

PLASTIC QUADFLAT PACK- NO LEAD

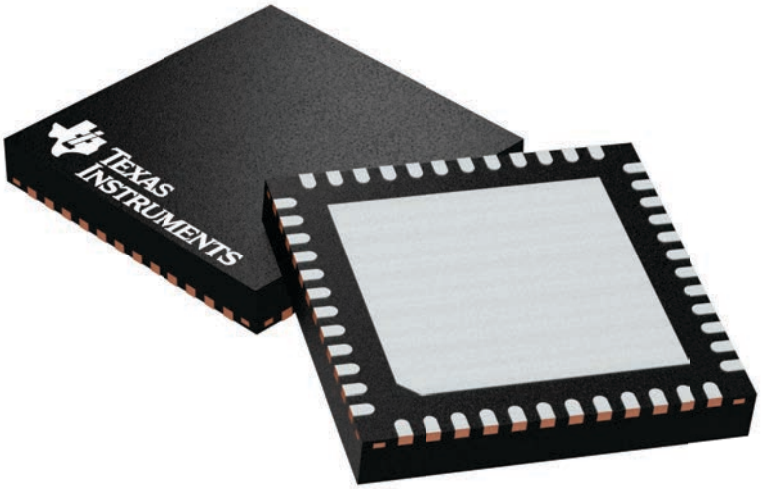

Images above are just a representation of the package family, actual package may vary.
Refer to the product data sheet for package details.

4224671/A

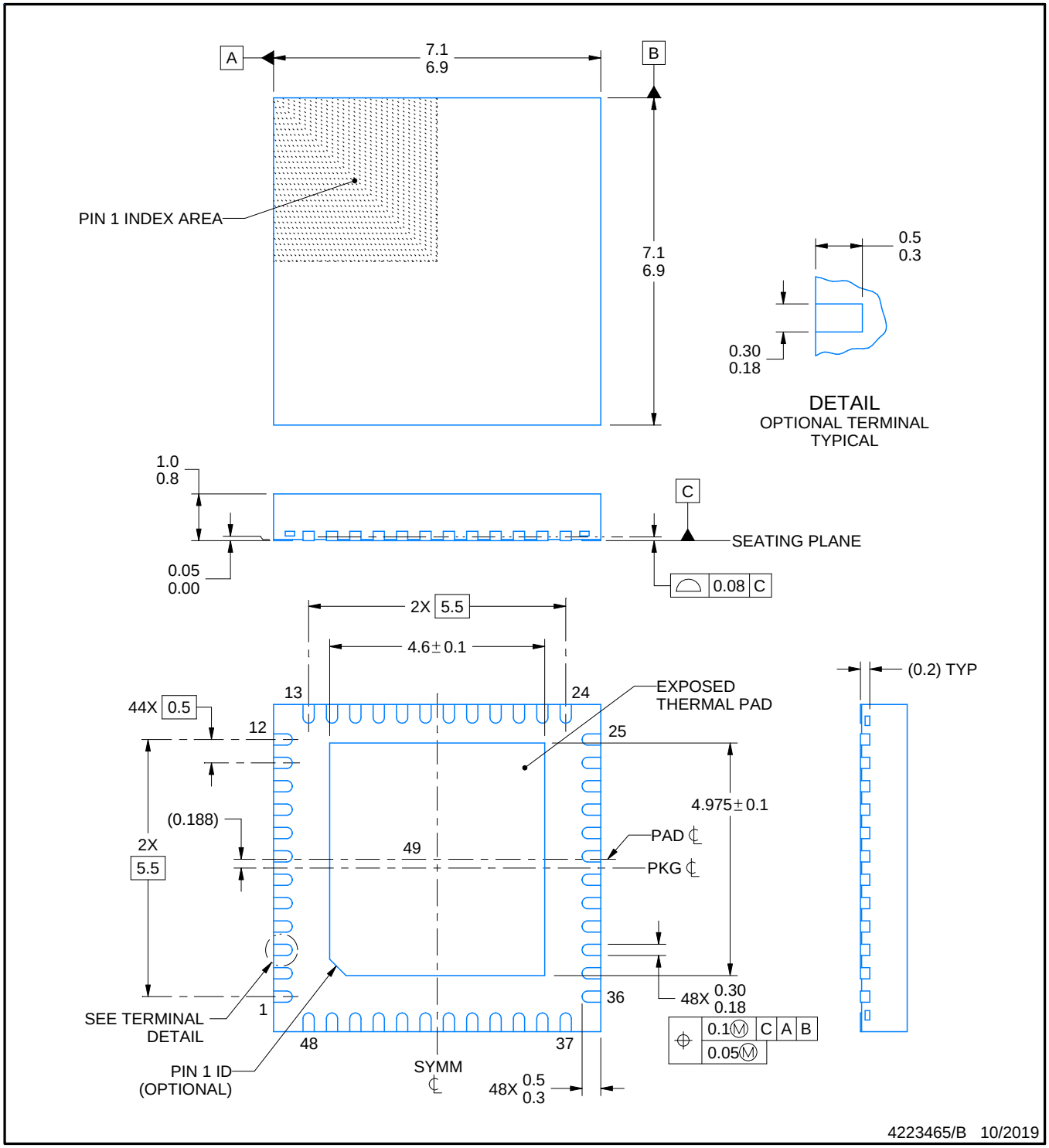

NOTES:

1. All linear dimensions are in millimeters. Any dimensions in parenthesis are for reference only. Dimensioning and tolerancing per ASME Y14.5M.
2. This drawing is subject to change without notice.
3. The package thermal pad must be soldered to the printed circuit board for thermal and mechanical performance.

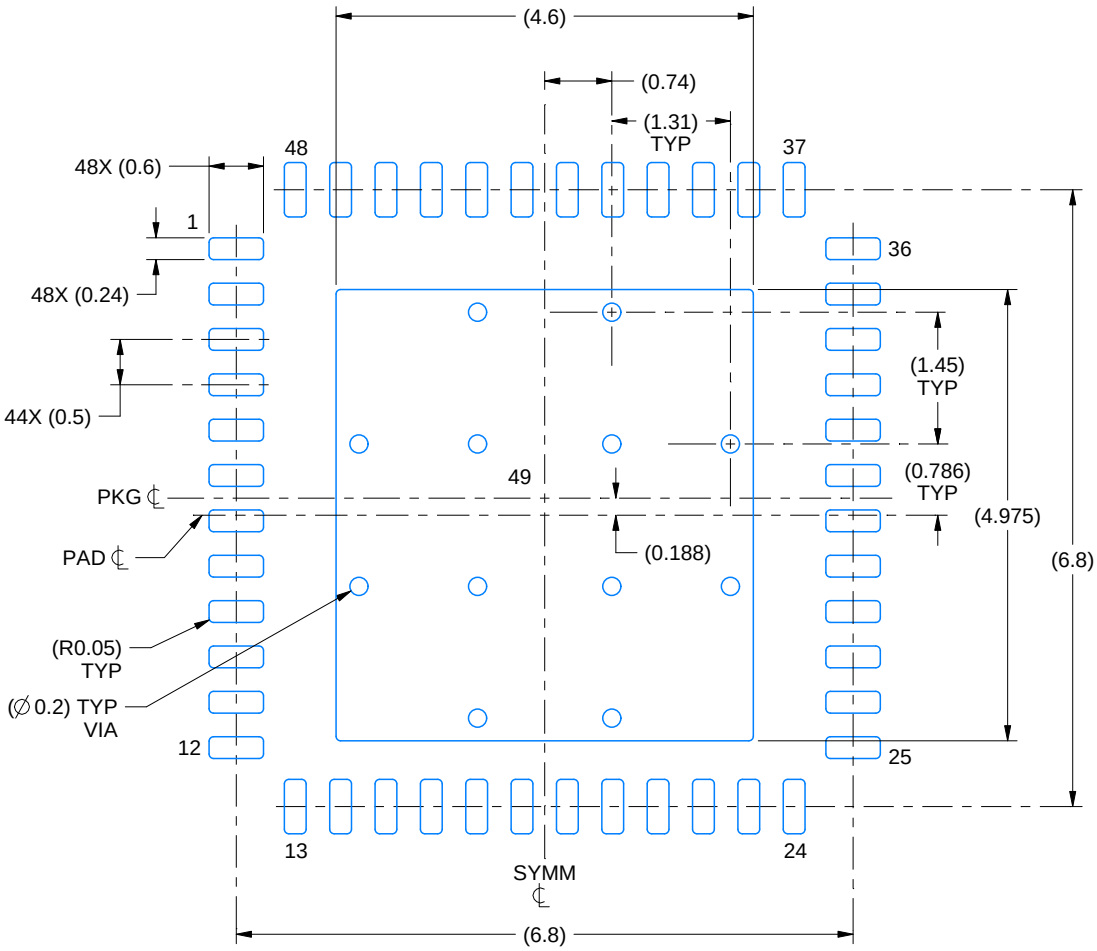

LAND PATTERN EXAMPLE
EXPOSED METAL SHOWN
SCALE:12X

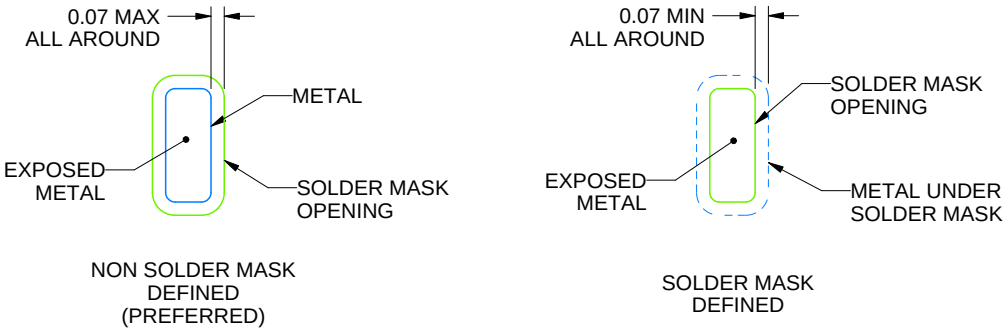

SOLDER MASK DETAILS

4223465/B 10/2019

NOTES: (continued)

4. This package is designed to be soldered to a thermal pad on the board. For more information, see Texas Instruments literature number SLUA271 (www.ti.com/lit/slua271).
5. Vias are optional depending on application, refer to device data sheet. If any vias are implemented, refer to their locations shown on this view. It is recommended that vias under paste be filled, plugged or tented.

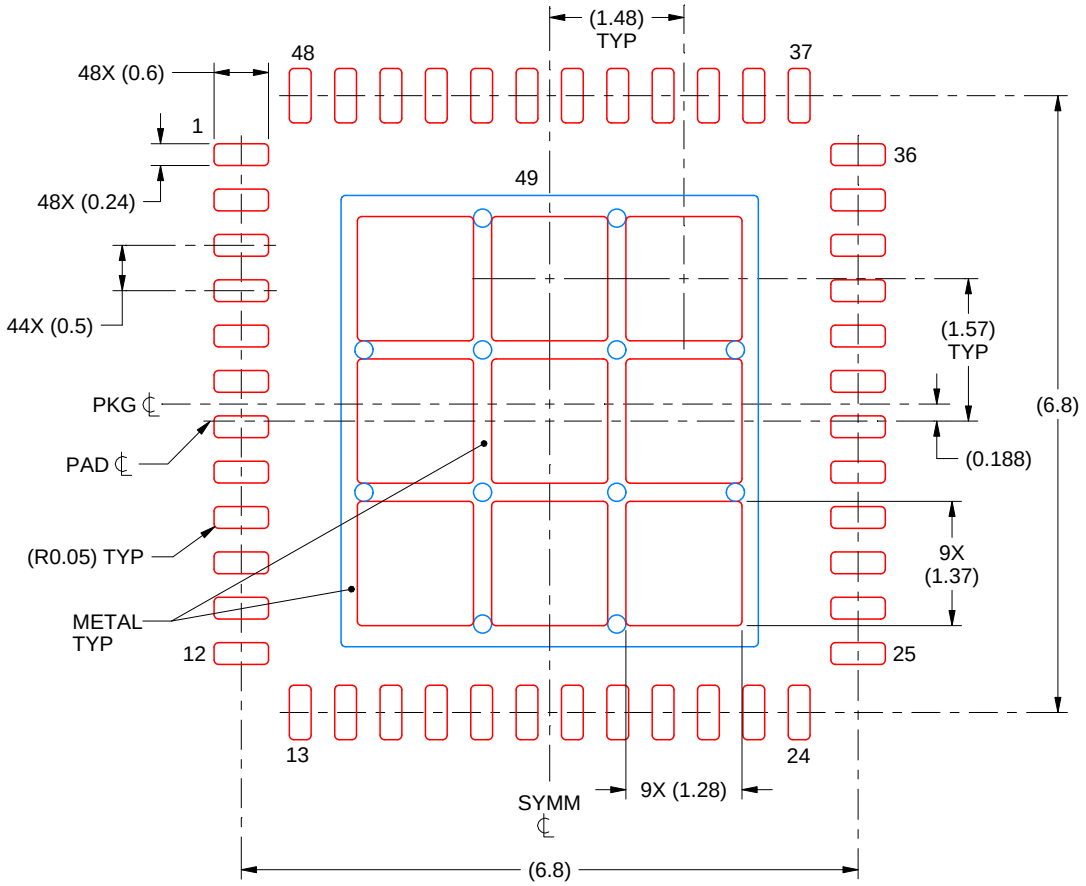

SOLDER PASTE EXAMPLE
BASED ON 0.125 mm THICK STENCIL

EXPOSED PAD 49
69% PRINTED SOLDER COVERAGE BY AREA UNDER PACKAGE
SCALE:12X

4223465/B 10/2019

NOTES: (continued)

6. Laser cutting apertures with trapezoidal walls and rounded corners may offer better paste release. IPC-7525 may have alternate design recommendations.

RTA (S–PQFP–N40) PLASTIC QUAD FLATPACK

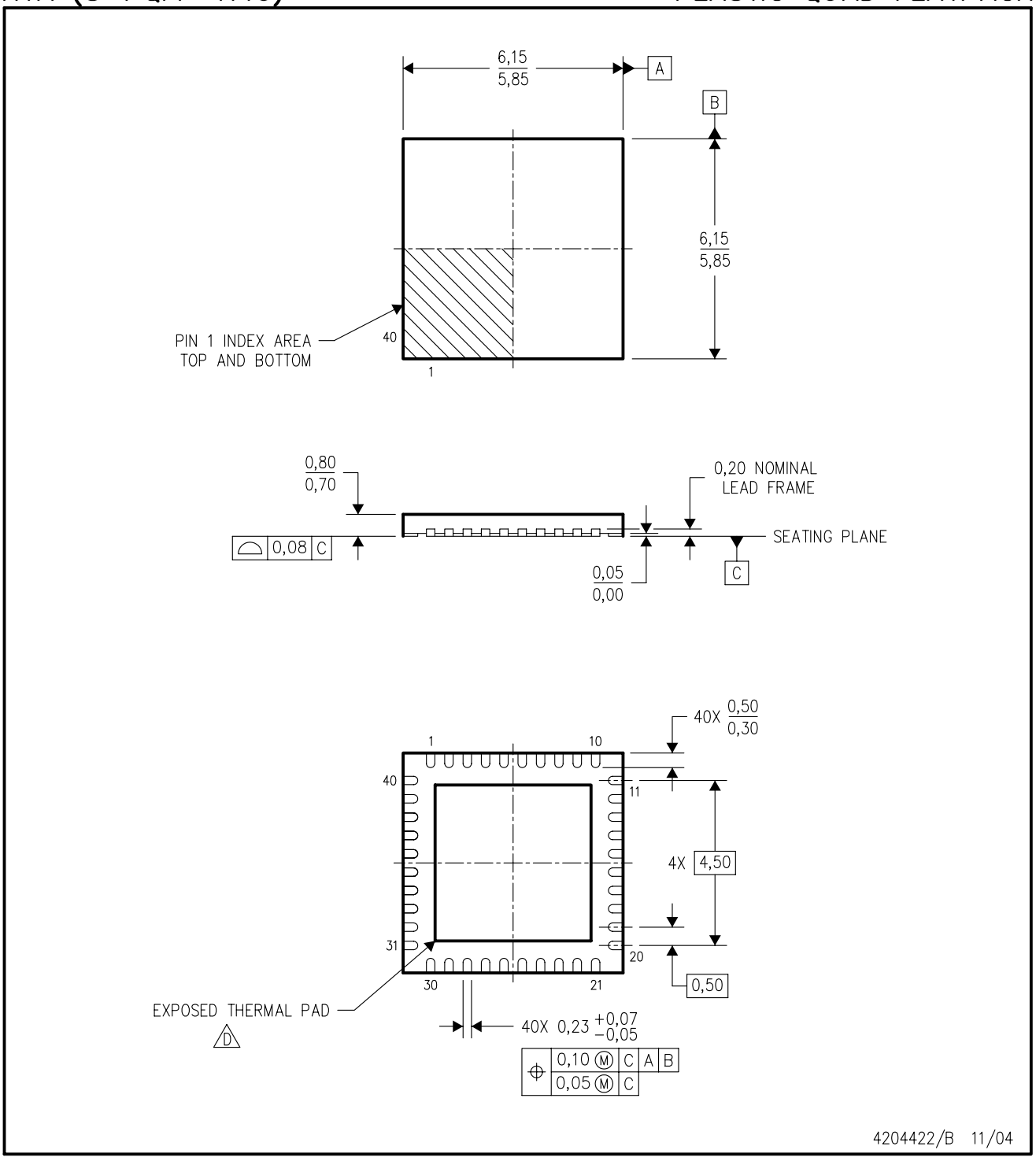

NOTES:
A. All linear dimensions are in millimeters. Dimensioning and tolerancing per ASME Y14.5M–1994.
B. This drawing is subject to change without notice.
C. QFN (Quad Flatpack No–Lead) Package configuration.
D. The package thermal pad must be soldered to the board for thermal and mechanical performance. See the Product Data Sheet for details regarding the exposed thermal pad dimensions.

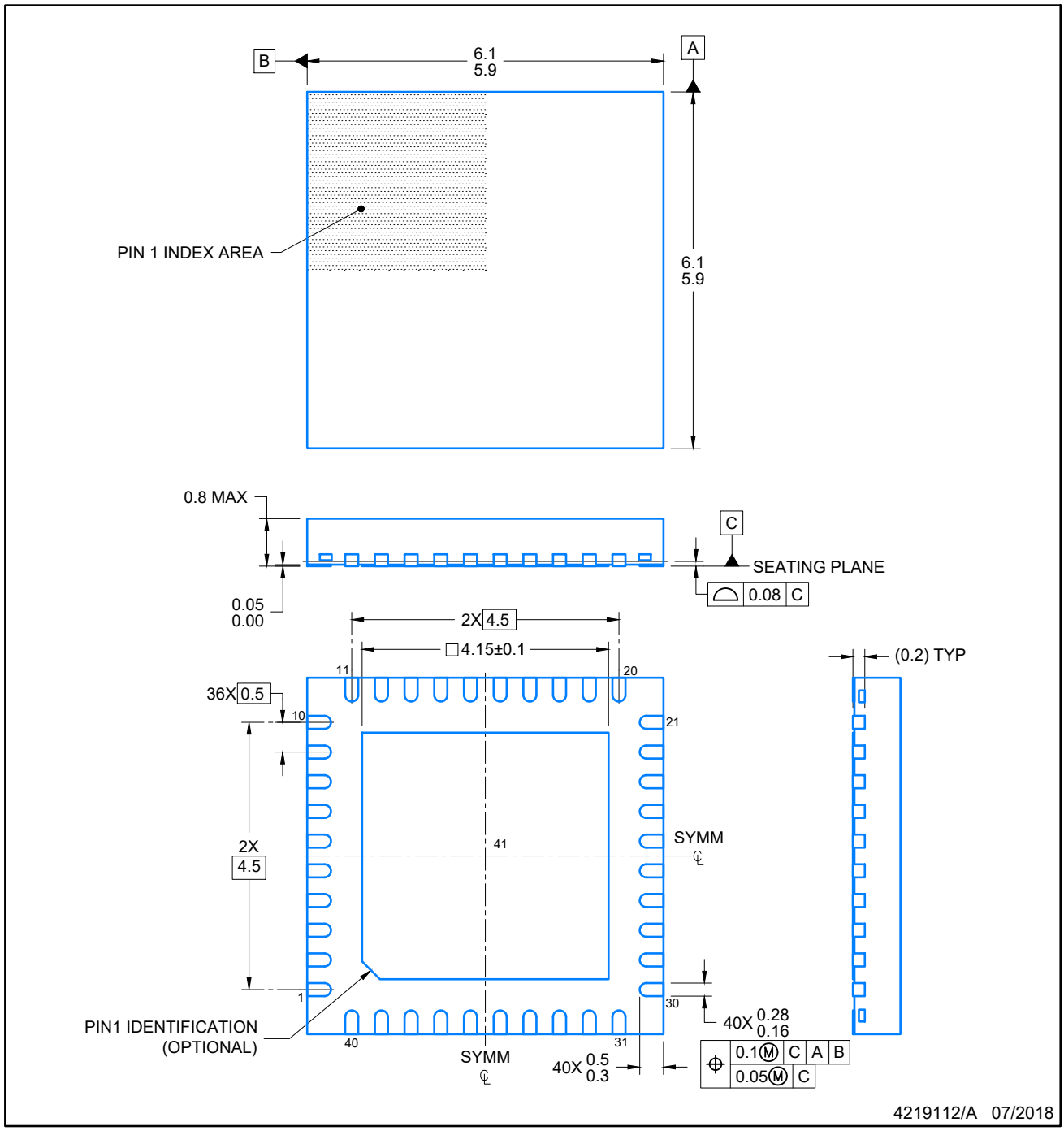

NOTES:

1. All linear dimensions are in millimeters. Any dimensions in parenthesis are for reference only. Dimensioning and tolerancing per ASME Y14.5M.
2. This drawing is subject to change without notice.
3. The package thermal pad must be soldered to the printed circuit board for optimal thermal and mechanical performance.

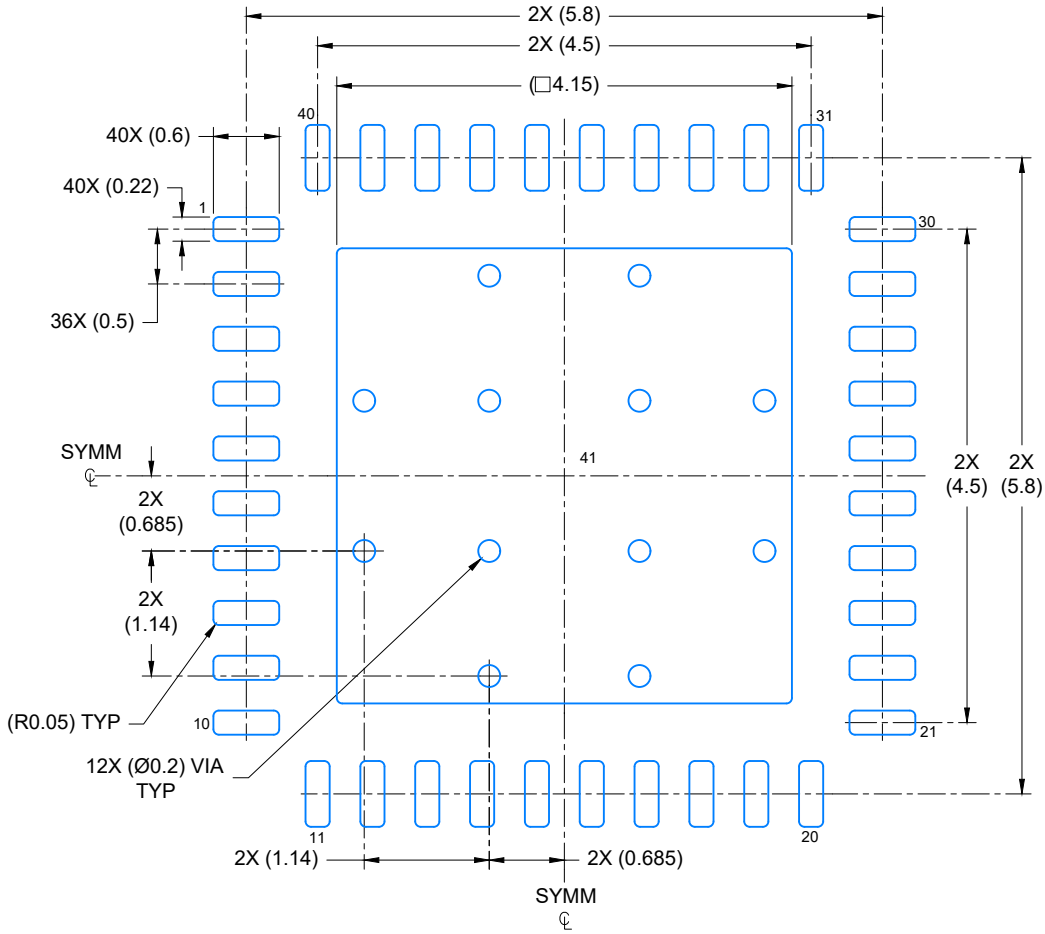

LAND PATTERN EXAMPLE

SCALE: 15X

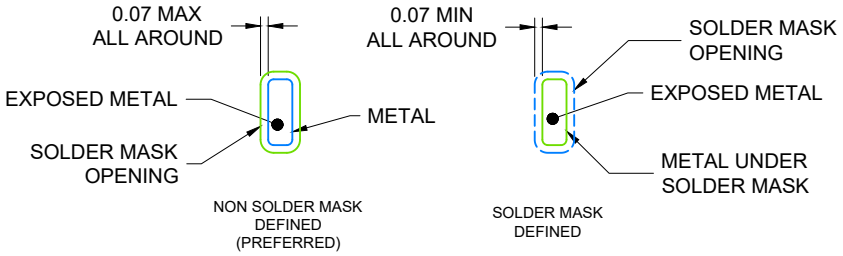

SOLDER MASK DETAILS

4219112/A 07/2018

NOTES: (continued)

4. This package is designed to be soldered to a thermal pad on the board. For more information, see Texas Instruments literature number SLUA271 (www.ti.com/lit/slua271).
5. Vias are optional depending on application, refer to device data sheet. If any vias are implemented, refer to their locations shown on this view. It is recommended that vias under paste be filled, plugged or tented.

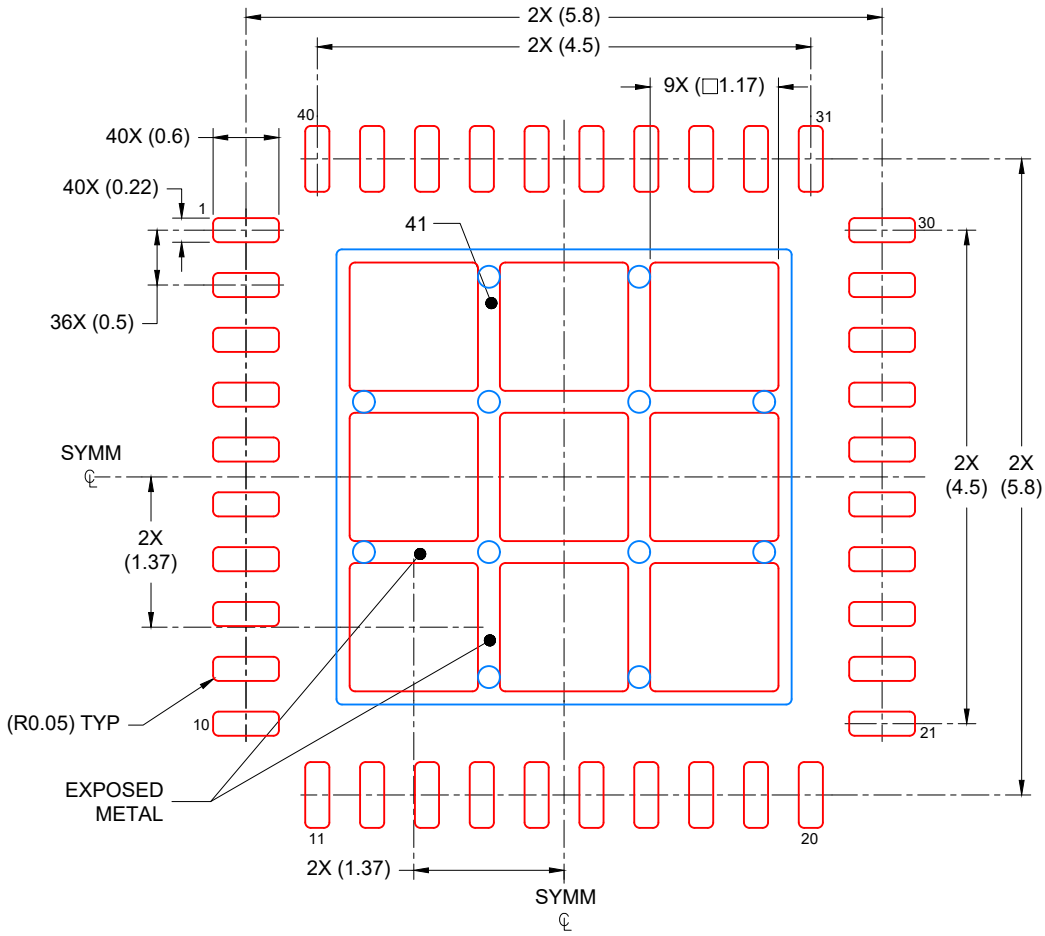

SOLDER PASTE EXAMPLE
BASED ON 0.125 mm THICK STENCIL

EXPOSED PAD
71% PRINTED COVERAGE BY AREA
SCALE: 15X

4219112/A 07/2018

NOTES: (continued)

6. Laser cutting apertures with trapezoidal walls and rounded corners may offer better paste release. IPC-7525 may have alternate design recommendations.

重要声明和免责声明

TI 均以“原样”提供技术性及可靠性数据（包括数据表）、设计资源（包括参考设计）、应用或其他设计建议、网络工具、安全信息和其他资源，不保证其中不含任何瑕疵，且不做任何明示或暗示的担保，包括但不限于对适销性、适合某特定用途或不侵犯任何第三方知识产权的暗示担保。

所述资源可供专业开发人员应用TI 产品进行设计使用。您将对以下行为独自承担全部责任：(1) 针对您的应用选择合适的TI 产品；(2) 设计、验证并测试您的应用；(3) 确保您的应用满足相应标准以及任何其他安全、安保或其他要求。所述资源如有变更，恕不另行通知。TI 对您使用所述资源的授权仅限于开发资源所涉及TI 产品的相关应用。除此之外不得复制或展示所述资源，也不提供其它TI或任何第三方的知识产权授权许可。如因使用所述资源而产生任何索赔、赔偿、成本、损失及债务等，TI对此概不负责，并且您须赔偿由此对TI 及其代表造成的损害。

TI 所提供产品均受TI 的销售条款 (http://www.ti.com.cn/zh-cn/legal/termsofsale.html) 以及ti.com.cn上或随附TI产品提供的其他可适用条款的约束。TI提供所述资源并不扩展或以其他方式更改TI 针对TI 产品所发布的可适用的担保范围或担保免责声明。

邮寄地址：上海市浦东新区世纪大道 1568 号中建大厦 32 楼，邮政编码：200122
Copyright © 2020 德州仪器半导体技术（上海）有限公司