DS16F95QML EIA-485/EIA-422A Differential Bus Transceiver

Check for Samples: DS16F95QML

FEATURES

- **Radiation Ensured 300 krad(Si)**
- **Meets EIA-485 and EIA-422A**
- **Meets SCSI-1 (5 MHZ) Specifications**
- **Designed for Multipoint Transmission**
- **Wide Positive and Negative Input/Output Bus Voltage Ranges**
- **Thermal Shutdown Protection**
- **Driver Positive and Negative Current-Limiting**
- **High Impedance Receiver Input**
- **Receiver Input Hysteresis of 50 mV Typical**
- **Operates from Single 5.0V Supply**
- **Reduced Power Consumption**
- **Pin Compatible with DS3695 and SN75176A**

DESCRIPTION

The DS16F95 Differential Bus Transceiver is a monolithic integrated circuit designed for bidirectional data communication on balanced multipoint bus transmission lines. The transceiver meets EIA standard RS-485 as well as RS-422A.

The DS16F95 offers improved performance due to the use of state-of-the-art L-FAST bipolar technology. The L-FAST technology allows for higher speeds and lower currents by utilizing extremely short gate delay times. Thus, the DS16F95QML features lower power, extended temperature range and improved specifications.

The DS16F95 combines a TRI-STATE differential line driver and a differential input line receiver, both of which operate from a single 5.0V power supply. The driver and receiver have an active Enable that can be externally connected to function as a direction control. The driver differential outputs and the receiver differential inputs are internally connected to form differential input/output (I/O) bus ports that are designed to offer minimum loading to the bus whenever the driver is disabled or when V_{CC} = 0V. These ports feature wide positive and negative common mode voltage ranges, making the device suitable for multipoint applications in noisy environments.

The driver is designed to accommodate loads of up to 60 mA of sink or source current and features positive and negative current limiting in addition to thermal shutdown for protection from line fault conditions.

The DS16F95 can be used in transmission line applications employing the DS96F172 and the DS96F174 quad differential line drivers and the DS96F173 and DS96F175 quad differential line receivers.

Please be aware that an important notice concerning availability, standard warranty, and use in critical applications of Texas Instruments semiconductor products and disclaimers thereto appears at the end of this data sheet.

All trademarks are the property of their respective owners.

PRODUCTION DATA information is current as of publication date. Products conform to specifications per the terms of the Texas Instruments standard warranty. Production processing does not necessarily include testing of all parameters.

Copyright © 2005–2013, Texas Instruments Incorporated

Connection Diagram

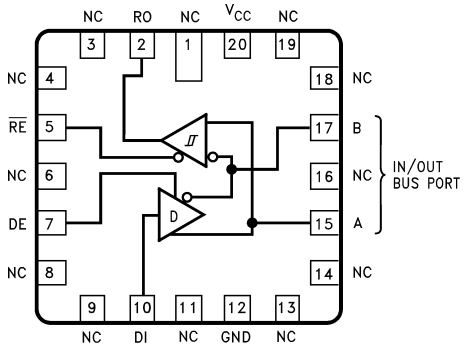

Figure 1. 20-Lead Ceramic Leadless Chip Carrier

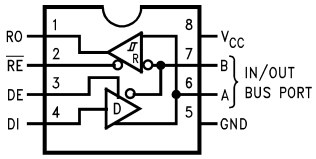

Figure 2. 8-Lead Dual-In-Line Package

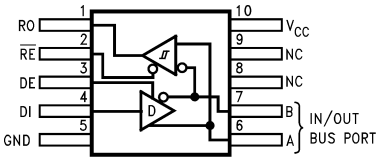

Figure 3. 10-Lead Flatpak Package

Logic Diagram

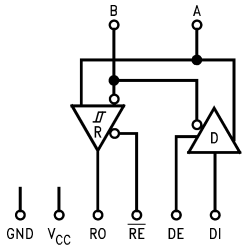

Function Tables

Table 1. Driver(1)

Driver Input	Enable	Outputs	
DI	**DE**	**A**	**B**
H	H	H	L
L	H	L	H
X	L	Z	Z

(1) H = High Level, L = Low Level, X = Immaterial, Z = High Impedance (Off)

Copyright © 2005–2013, Texas Instruments Incorporated

Table 2. Receiver(1)

Differential Inputs	Enable	Output
A–B	$\overline{\textbf{RE}}$	**RO**
$V_{ID} \geq 0.2V$	L	H
$V_{ID} \leq -0.2V$	L	L
X	H	Z

(1) H = High Level, L = Low Level, X = Immaterial, Z = High Impedance (Off)

Copyright © 2005–2013, Texas Instruments Incorporated

These devices have limited built-in ESD protection. The leads should be shorted together or the device placed in conductive foam during storage or handling to prevent electrostatic damage to the MOS gates.

Absolute Maximum Ratings(1)

Storage Temperature Range			-65°C ≤ T_A ≤ +175°C
Lead Temperature	(Soldering, 60 sec.)		300°C
Maximum Power Dissipation at 25°C(2)	LCCC 'NAJ' Package		1800 mW
	CDIP 'NAB' Package		1274 mW
	CLGA 'NAD' Package		725 mW
Supply Voltage			7.0V
Input Voltage (Bus Terminal)			+15V/−10V
Enable Input Voltage			5.5V
Junction Temperature (TJ)			+175°C
Thermal Resistance	θ_{JA}	LCCC 'NAJ' Package	83°C/W @ 0.5W
		CDIP 'NAB' Package	118°C/W @ 1.0W
		CLGA 'NAD' Package	207°C/W @ 0.5W
	θ_{JC}	LCCC 'NAJ' Package	17°C/W
		CDIP 'NAB' Package	14°C/W
		CLGA 'NAD' Package	18°C/W
ESD Tolerance(3)			500V

(1) Absolute Maximum Ratings are those values beyond which the safety of the device cannot be ensured. They are not meant to imply that the devices should be operated at these limits. The tables of Electrical Characteristics provide conditions for actual device operation.
(2) Above T_A = 25°C, derate NAJ package 12.1mW°C, NAB package 8.5 mW/°C, NAD package 4.8mW/°C.
(3) Human body model, 1.5kΩ in series with 100pF

Recommended Operating Conditions

Supply Voltage (V_{CC})		4.50 to 5.50V
Voltage at Any Bus Terminal	(Separately or Common Mode) (V_I or V_{CM})	-7.0V to +12V
Differential Input Voltage (V_{ID})		-7.0V to ±12V
Output Current HIGH (I_{OH}) Driver	Driver	-60mA
	Receiver	-400µA
Output Current LOW (I_{OL})	Driver	60mA
	Receiver	16mA
Operating Temperature (T_A)		-55°C to +125°C

Copyright © 2005–2013, Texas Instruments Incorporated

Quality Conformance Inspection

MIL-STD-883, Method 5005 - Group A

Subgroup	Description	Temp (°C)
1	Static tests at	+25
2	Static tests at	+125
3	Static tests at	-55
4	Dynamic tests at	+25
5	Dynamic tests at	+125
6	Dynamic tests at	-55
7	Functional tests at	+25
8A	Functional tests at	+125
8B	Functional tests at	-55
9	Switching tests at	+25
10	Switching tests at	+125
11	Switching tests at	-55

DC - Driver Electrical Characteristics(1)

The following conditions apply to all parameters, unless otherwise specified. V_{CC} = 5.5V

Symbol	Parameter	Conditions	Notes	Min	Max	Unit	Sub-group
VOD1	Differential Vout	V_{CC} = 5.5V, I_O = 0A, V_{IN} = .8V			6	V	1, 2, 3
		V_{CC} = 5.5V, I_O = 0A, V_{IN} = 2V			6	V	1, 2, 3
VOD2	Differential Vout (See Figure 4)	V_{CC} = 4.5V, R_L = 100Ω		2		V	1, 2, 3
		V_{CC} = 4.5V, R_L = 54Ω		1.5		V	1, 2, 3
ΔV_{OD}	Change In Differential Vout	V_{CC} = 4.5V, R_L = 100Ω	See(2)	-200	200	mV	1, 2, 3
		V_{CC} = 4.5V, R_L = 54Ω		-200	200	mV	1, 2, 3
ΔV_{OC}	Change In Common Mode Vout	V_{CC} = 4.5V, R_L = 100Ω	See(2)	-200	200	mV	1, 2, 3
		V_{CC} = 4.5V, R_L = 54Ω		-200	200	mV	1, 2, 3
V_{OC}	Common Mode Vout	R_L = 100Ω			3	V	1, 2, 3
		R_L = 54Ω			3	V	1, 2, 3
I_{IH}	Logical "1" Input Current	V_I = 2.4V			20	uA	1, 2, 3
I_O	Output Current	Output Disable, V_O = 12V			1	mA	1, 2, 3
		Output Disable, V_O = -7V	See(3)	-0.8		mA	1, 2, 3
		V_{CC} = 0, Output Disable, V_O = 12V			1	mA	1, 2, 3
		V_{CC} = 0, Output Disable, V_O = -7V	See(3)	-0.8		mA	1, 2, 3

(1) Pre and post irradiation limits are identical to those listed under A C and DC electrical characteristics. These parts may be dose rate sensitive in a space environment and demonstrate enhanced low dose rate effect. Radiation end point limits for the noted parameters are ensured only for the conditions as specified in MIL-STD 883, Method 1019, condition A.

(2) $\Delta|V_{OD}|$ and $\Delta|V_{OC}|$ are the changes in magnitude of V_{OD} and V_{OC}, respectively, that occur when the input is changed from a high level to a low level.

(3) Negative sign of the limits indicates the direction of the current flow only.

Copyright © 2005–2013, Texas Instruments Incorporated

DC - Driver Electrical Characteristics(1) (continued)

The following conditions apply to all parameters, unless otherwise specified. V_{CC} = 5.5V

Symbol	Parameter	Conditions	Notes	Min	Max	Unit	Sub-group
I_{OS}	Output Short Circuit	V_{IN} = 3V, V_{OUT} = V_{CC}			150	mA	1, 2, 3
		V_{IN} = 3V, V_{OUT} = -7V	See(4)	-250		mA	1, 2, 3
		V_{IN} = 3V, V_{OUT} = 0V		-150		mA	1, 2, 3
		V_{IN} = 3V, V_{OUT} = 12V			250	mA	1, 2, 3
		V_{IN} = 0V, V_{OUT} = 12V			250	mA	1, 2, 3
		V_{IN} = 0V, V_{OUT} = V_{CC}			150	mA	1, 2, 3
		V_{IN} = 0V, V_{OUT} = -7V	See(4)	-250		mA	1, 2, 3
		V_{IN} = 0V, V_{OUT} = 0V		-150		mA	1, 2, 3
V_{OH}	Logical "1" Output Voltage	V_{CC} = 4.5V, I_O = -20mA		3		V	1, 2, 3
V_{OL}	Logical "0" Output Voltage	V_{CC} = 4.5V, I_O = 20mA			2	V	1, 2, 3
VOD3	Differential Vout	V_{CM} = -7V to 12V		1		V	1, 2, 3

(4) Negative sign of the limits indicates the direction of the current flow only.

DC - Receiver Electrical Characteristics(1)

The following conditions apply to all parameters, unless otherwise specified. V_{CC} = 5.5V

Symbol	Parameter	Conditions	Notes	Min	Max	Unit	Sub-group
V_{OH}	Logical "1" Output Voltage (See Figure 5)	V_{CC} = 4.5V, V_{LD} = 200mV, I_{OH} = -400uA		2.5		V	1, 2, 3
V_{OL}	Logical "0" Output Voltage (See Figure 5)	V_{CC} = 4.5V, V_{LD} = -200mV, I_{OL} = 8mA			.45	V	1, 2, 3
		V_{CC} = 4.5V, V_{LD} = -200mV, I_{OL} = 16mA			.5	V	1, 2, 3
I_I	Line Input Current	Untested Input = 0V, V_I = 12V			1	mA	1, 2, 3
		Untested Input = 0V, V_I = -7V	See(2)	-.8		mA	1, 2, 3
		V_{CC} = 0V, Untested Input = 0V, V_I = 12V	See(2)		1	mA	1, 2, 3
		V_{CC} = 0V, Untested Input = 0V, V_I = -7V		-.8		mA	1, 2, 3
I_{IH}	Logical "1" Input Current	V_I = 2.7V (Receiver)			20	uA	1, 2, 3
R_{IN}	Input Resistance	Untested Input = 0V, V_I = 12V	See(3)	10		KΩ	1, 2, 3
		Untested Input = 0V, V_I = -7V		10		KΩ	1, 2, 3
		V_{CC} = 0V, Untested Input = 0V, V_I = 12V	See(3)	10		KΩ	1, 2, 3
		V_{CC} = 0V, Untested Input = 0V, V_I = -7V		10		KΩ	1, 2, 3
I_{OZ}	High Impedance State	V_I = 0.4V		-20	20	uA	1, 2, 3
		V_I = 2.4V		-20	20	uA	1, 2, 3

(1) Pre and post irradiation limits are identical to those listed under A C and DC electrical characteristics. These parts may be dose rate sensitive in a space environment and demonstrate enhanced low dose rate effect. Radiation end point limits for the noted parameters are ensured only for the conditions as specified in MIL-STD 883, Method 1019, condition A.
(2) Negative sign of the limits indicates the direction of the current flow only.
(3) R_{IN} is guaranteed by testing “Line Input Current” (II).

Copyright © 2005–2013, Texas Instruments Incorporated

DC - Receiver Electrical Characteristics(1) (continued)

The following conditions apply to all parameters, unless otherwise specified. V_{CC} = 5.5V

Symbol	Parameter	Conditions	Notes	Min	Max	Unit	Sub-group
I_{OS}	Output Short Circuit	V_{IN} = 1V, V_{OUT} = 0V		-85	-15	mA	1, 2, 3
V_{TH}	Differential Input High Threshold	V_{CC} = 4.5V, V_O = 2.5V, V_{CM} = 12V & 0V & -7V, I_O = -.4mA			.2	V	1, 2, 3
		V_{CC} = 5.5V, Vo = 2.5V, V_{CM} = 12V & 0V & -7V, I_O = -.4mA			.2	V	1, 2, 3
V_T1	Differential Input Low Threshold	V_{CC} = 4.5V, V_O = .5V, V_{CM} = 12V & 0V & -7V, I_O = 8mA		-.2		V	1, 2, 3
		V_{CC} = 5.5V, V_O = .5V, V_{CM} = 12V & 0V & -7V, I_O = 8mA		-.2		V	1, 2, 3
V_{TH}+ - (V_{TH}-)	Hyteresis	V_{CC} = 4.5V, V_{CM} = 0V		35		mV	1, 2, 3
		V_{CC} = 5.5V, V_{CM} = 0V		35		mV	1, 2, 3

DC - Both Driver and Receiver Electrical Characteristics(1)

The following conditions apply to all parameters, unless otherwise specified. V_{CC} = 5.5V

Symbol	Parameter	Conditions	Notes	Min	Max	Unit	Sub-group
I_{CC}	Supply Current I_{CC} Both Disable	$\overline{RE}$ = 2V, $\overline{DE}$ = .8V			25	mA	1, 2, 3
I_{CC}	Supply Current I_{CC} Both Enable	$\overline{RE}$ =.8V, $\overline{DE}$ = 2V			28	mA	1, 2, 3
V_{IC}	Input Clamp Volt	I_I = -18mA		-1.3		V	1, 2, 3
V_{IH}	Logical "1" Input Voltage			2		V	1, 2, 3
V_{IL}	Logical "0" Input Voltage				.8	V	1, 2, 3
V_{IH}	Logical "1" Enable Input Voltage			2		V	1, 2, 3
V_{IL}	Logical "0" Enable Input Voltage				.8	V	1, 2, 3
I_{IL}	Logical "0" Input Current	V_I = 0.4V	See(2)	-50		uA	1, 2, 3

(1) Pre and post irradiation limits are identical to those listed under A C and DC electrical characteristics. These parts may be dose rate sensitive in a space environment and demonstrate enhanced low dose rate effect. Radiation end point limits for the noted parameters are ensured only for the conditions as specified in MIL-STD 883, Method 1019, condition A.
(2) Negative sign of the limits indicates the direction of the current flow only.

AC - Driver Electrical Characteristics(1)

The following conditions apply to all parameters, unless otherwise specified.
V_{CC} = 5V, PRR = 1MH_Z, $T_R \le T_F \le$ 6nS, 50% duty cycle, AMP = 3V, VL_O, Z_{OUT} = 50Ω

Symbol	Parameter	Conditions	Notes	Min	Max	Unit	Sub-group
t_{DD}	Differential Output Delay Time (See Figure 6)	R_L = 60Ω	See(2)	8	25	nS	9
				8	30	nS	10, 11
t_{TD}	Differential Output Transition Time (See Figure 6)	R_L = 60Ω	See(2)(3)	8	25	nS	9
				8	30	nS	10, 11
t_{PLH}	Propagation Delay Time Low to High (See Figure 7)	R_L = 27Ω		6	18	nS	9
				6	25	nS	10, 11
t_{PHL}	Propagation Delay Time high to Low (See Figure 7)	R_L = 27Ω		6	18	nS	9
				6	25	nS	10, 11
t_{PZH}	Output Enable Time to H (See Figure 8)	R_L = 110Ω			35	nS	9
					45	nS	10, 11
t_{PZL}	Output Enable Time to L (See Figure 9)	R_L = 110Ω			40	nS	9
					50	nS	10, 11

(1) Pre and post irradiation limits are identical to those listed under A C and DC electrical characteristics. These parts may be dose rate sensitive in a space environment and demonstrate enhanced low dose rate effect. Radiation end point limits for the noted parameters are ensured only for the conditions as specified in MIL-STD 883, Method 1019, condition A.
(2) Rise time 20% to 80%, Fall time 80% to 20%.
(3) tTD = Non-inverting output rise time + inverting output fall time / 2, Non-inverting output fall time + inverting output rise time / 2.

Copyright © 2005–2013, Texas Instruments Incorporated

AC - Driver Electrical Characteristics[1] (continued)

The following conditions apply to all parameters, unless otherwise specified.
V_{CC} = 5V, PRR = 1MH$_Z$, $T_R \le T_F \le$ 6nS, 50% duty cycle, AMP = 3V, VL_O, Z_{OUT} = 50Ω

Symbol	Parameter	Conditions	Notes	Min	Max	Unit	Sub-group
t_{PHZ}	Output Disable Time to H (See Figure 8)	RL = 110Ω			30	nS	9
					40	nS	10, 11
t_{PLZ}	Output Disable Time to L (See Figure 9)	R_L = 110Ω			30	nS	9
					40	nS	10, 11
T_{SKEW}	Differential Output Skew Time (See Figure 6)				6	nS	9
					12	nS	10, 11

AC - Receiver Electrical Characteristics[1]

The following conditions apply to all parameters, unless otherwise specified.
V_{CC} = 5V, PRR = 1MH$_Z$, $T_R \le T_F \le$ 6nS, 50% duty cycle, AMP = 3V, VL_O, Z_{OUT} = 50Ω

Symbol	Parameter	Conditions	Notes	Min	Max	Unit	Sub-group
t_{PLH}	Propagation Delay Time Low to High (See Figure 10)	C_L = 15pF		10	27	nS	9
				10	38	nS	10, 11
t_{PHL}	Propagation Delay Time High to Low (See Figure 10)	C_L = 15pF		10	27	nS	9
				10	38	nS	10, 11
t_{PZH}	Output Enable Time to H (See Figure 11)	C_L = 15pF			20	nS	9
					30	nS	10, 11
t_{PZL}	Output Enable Time to L (See Figure 11)	C_L = 15pF			20	nS	9
					30	nS	10, 11
$\lvert t_{PLH} - t_{PHL} \rvert$	Output to Output Delay Time (See Figure 10)				8	nS	9
					16	nS	10, 11
t_{PHZ}	Output Disable Time From H (See Figure 11)	C_L = 20pF	See[2]		30	nS	9
					40	nS	10, 11
		C_L = 5pF	See[2]		20	nS	9
					30	nS	10, 11
t_{PLZ}	Output Disable Time From L (See Figure 11)	C_L = 5pF			20	nS	9
					30	nS	10, 11

(1) Pre and post irradiation limits are identical to those listed under A C and DC electrical characteristics. These parts may be dose rate sensitive in a space environment and demonstrate enhanced low dose rate effect. Radiation end point limits for the noted parameters are ensured only for the conditions as specified in MIL-STD 883, Method 1019, condition A.
(2) Testing at 20pF assures conformance to spec at 5pF.

Copyright © 2005–2013, Texas Instruments Incorporated

Parameter Measurement Information

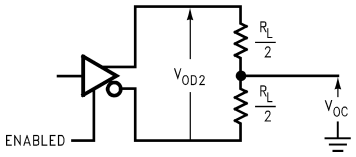

Figure 4. Driver V_{OD} and V_{OC}(1)

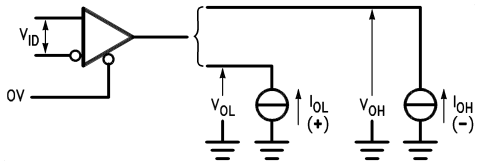

Figure 5. Receiver V_{OH} and V_{OL}

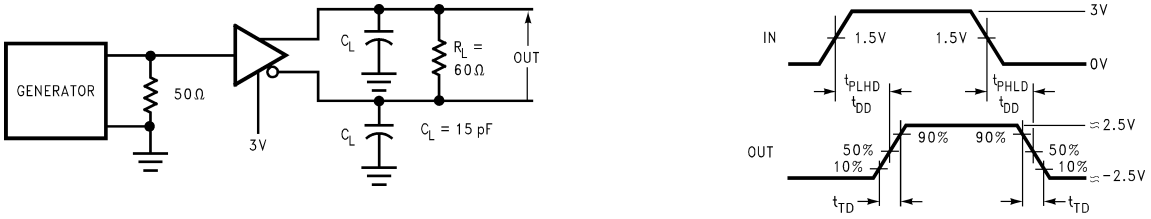

$t_{SKEW} = |t_{PLHD} - t_{PHLD}|$

Figure 6. Driver Differential Output Delay and Transition Times(2)(3)

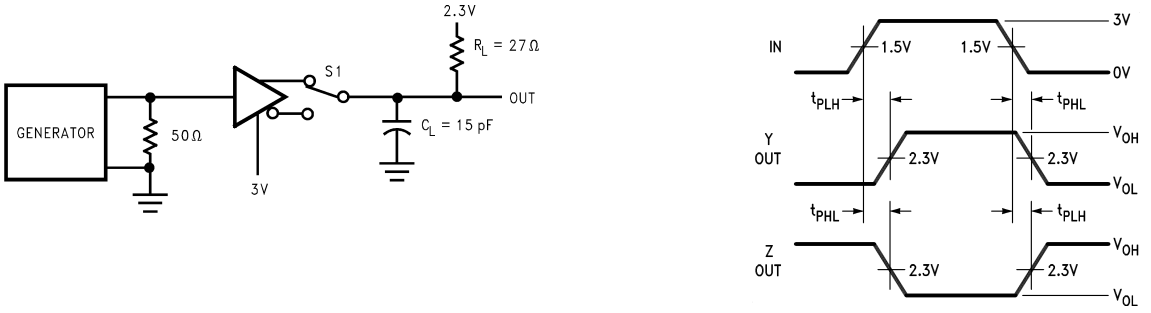

Figure 7. Driver Propagation Times(2)(4)

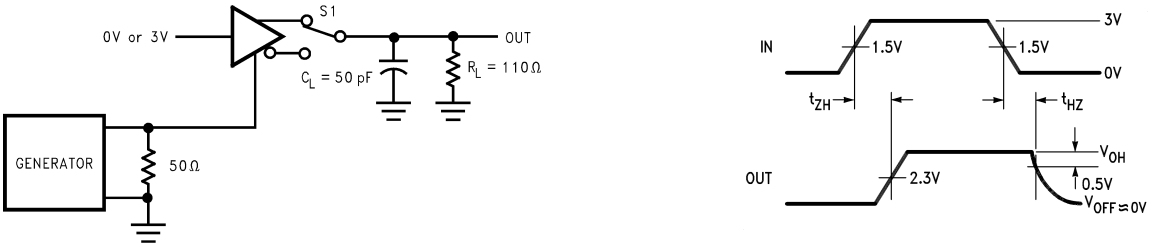

Figure 8. Driver Enable and Disable Times (t_{ZH}, t_{HZ})(2)(3)(4)

(1) All diodes are 1N916 or equivalent.
(2) The input pulse is supplied by a generator having the following characteristics: PRR = 1.0 MHz, 50% duty cycle, t_r ≤ 6.0 ns, t_f ≤ 6.0 ns, Z_O = 50Ω.
(3) DS16F95 Driver enable is Active-High.
(4) C_L includes probe and stray capacitance.

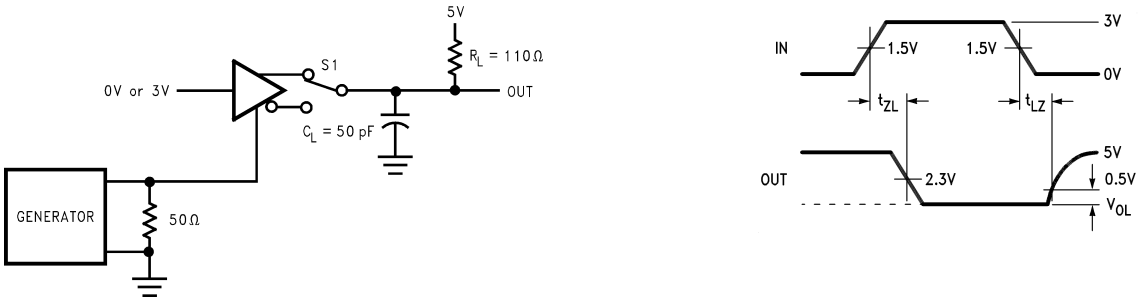

Figure 9. Driver Enable and Disable Times (t_{ZL}, t_{LZ})[(1)(2)(3)]



Figure 10. Receiver Propagation Delay Times[(1)(3)]

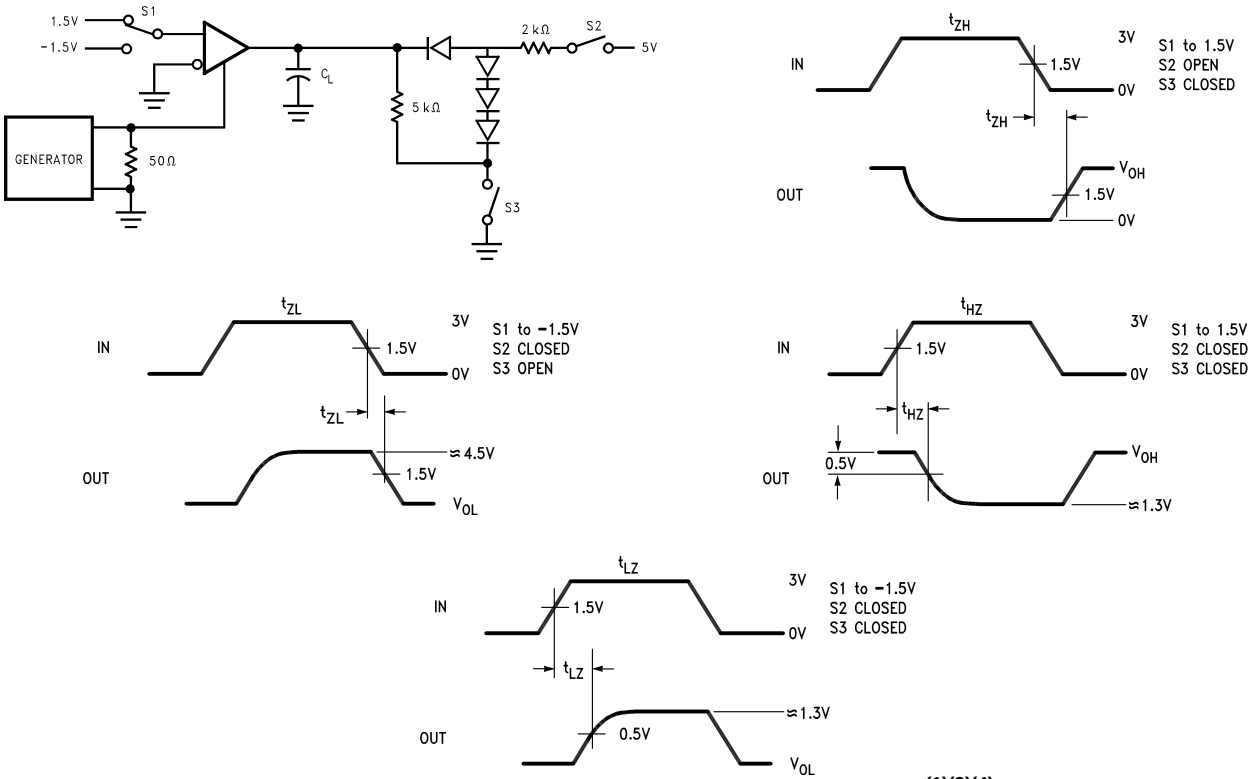

Figure 11. Receiver Enable and Disable Times[(1)(3)(4)]

(1) The input pulse is supplied by a generator having the following characteristics: PRR = 1.0 MHz, 50% duty cycle, t_r ≤ 6.0 ns, t_f ≤ 6.0 ns, Z_O = 50Ω.
(2) DS16F95 Driver enable is Active-High.
(3) C_L includes probe and stray capacitance.
(4) All diodes are 1N916 or equivalent.

Copyright © 2005–2013, Texas Instruments Incorporated

Typical Application

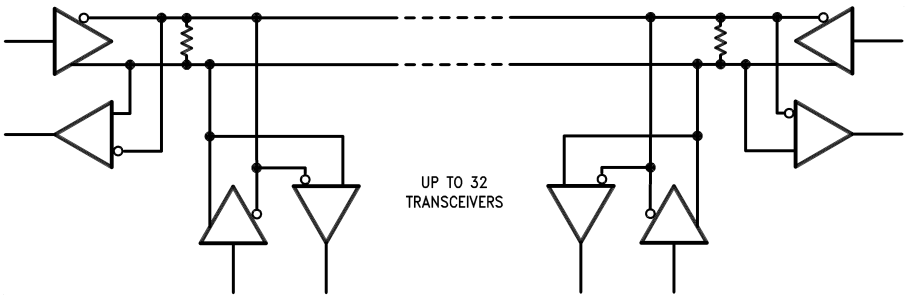

The line should be terminated at both ends in its characteristic impedance, typically 120Ω.
Stub lengths off the main line should be kept as short as possible.

Copyright © 2005–2013, Texas Instruments Incorporated

REVISION HISTORY

Date Released	Revision	Section	Changes
9/23/2005	A	New Release, Corporate format	1 MDS data sheet converted into Corporate data sheet format. MDS data sheet MNDS16F95-X-RH, Rev. 0A1 will be Archived.
10/26/2010	B	Features, Ordering Table, Connection Diagrams W pkg, Absolute Ratings, Electricals - DC Receiver V_T1, AC Driver conditions, Physical Dimensions Mkt drawing	Update with current device information and format. Correction to rad info., Code K NSID's removed, removed reference to WG pkg, typo correction to conditions, Removed WG pkg drawing. Revision A will be Archived
4/12/2013	B	All	Changed layout of National Data Sheet to TI format.

Copyright © 2005–2013, Texas Instruments Incorporated

PACKAGING INFORMATION

Orderable Device	Status (1)	Package Type	Package Drawing	Pins	Package Qty	Eco Plan (2)	Lead finish/ Ball material (6)	MSL Peak Temp (3)	Op Temp (°C)	Device Marking (4/5)	Samples
5962-89615012A	ACTIVE	LCCC	NAJ	20	50	RoHS-Exempt & Green	Call TI	Level-1-NA-UNLIM	-55 to 125	DS16F95E /883 Q 5962-89615 012A ACO 012A >T	Samples
5962-8961501PA	ACTIVE	CDIP	NAB	8	40	Non-RoHS & Green	Call TI	Level-1-NA-UNLIM	-55 to 125	DS16F95J/883 5962-89615 01PA Q ACO (DS9638J/883, DS96 38J/883) 01PA Q >T	Samples
5962F8961501VHA	ACTIVE	CFP	NAD	10	19	Non-RoHS & Green	Call TI	Level-1-NA-UNLIM	-55 to 125	DS16F95 WFQMLV Q 5962F89615 01VHA ACO 01VHA >T	Samples
DS16F95 MDR	ACTIVE	DIESALE	Y	0	34	RoHS & Green	Call TI	Level-1-NA-UNLIM	-55 to 125		Samples
DS16F95E/883	ACTIVE	LCCC	NAJ	20	50	RoHS-Exempt & Green	Call TI	Level-1-NA-UNLIM	-55 to 125	DS16F95E /883 Q 5962-89615 012A ACO 012A >T	Samples
DS16F95J/883	ACTIVE	CDIP	NAB	8	40	Non-RoHS & Green	Call TI	Level-1-NA-UNLIM	-55 to 125	DS16F95J/883 5962-89615 01PA Q ACO (DS9638J/883, DS96 38J/883) 01PA Q >T	Samples
DS16F95W/883	ACTIVE	CFP	NAD	10	19	Non-RoHS & Green	Call TI	Level-1-NA-UNLIM	-55 to 125	DS16F95W /883 Q ACO /883 Q >T	Samples
DS16F95WFQMLV	ACTIVE	CFP	NAD	10	19	Non-RoHS & Green	Call TI	Level-1-NA-UNLIM	-55 to 125	DS16F95 WFQMLV Q 5962F89615 01VHA ACO 01VHA >T	Samples

(1) The marketing status values are defined as follows:
ACTIVE: Product device recommended for new designs.
LIFEBUY: TI has announced that the device will be discontinued, and a lifetime-buy period is in effect.
NRND: Not recommended for new designs. Device is in production to support existing customers, but TI does not recommend using this part in a new design.
PREVIEW: Device has been announced but is not in production. Samples may or may not be available.
OBSOLETE: TI has discontinued the production of the device.

(2) **RoHS:** TI defines "RoHS" to mean semiconductor products that are compliant with the current EU RoHS requirements for all 10 RoHS substances, including the requirement that RoHS substance do not exceed 0.1% by weight in homogeneous materials. Where designed to be soldered at high temperatures, "RoHS" products are suitable for use in specified lead-free processes. TI may reference these types of products as "Pb-Free".
RoHS Exempt: TI defines "RoHS Exempt" to mean products that contain lead but are compliant with EU RoHS pursuant to a specific EU RoHS exemption.
Green: TI defines "Green" to mean the content of Chlorine (Cl) and Bromine (Br) based flame retardants meet JS709B low halogen requirements of <=1000ppm threshold. Antimony trioxide based flame retardants must also meet the <=1000ppm threshold requirement.

(3) MSL, Peak Temp. - The Moisture Sensitivity Level rating according to the JEDEC industry standard classifications, and peak solder temperature.

(4) There may be additional marking, which relates to the logo, the lot trace code information, or the environmental category on the device.

(5) Multiple Device Markings will be inside parentheses. Only one Device Marking contained in parentheses and separated by a "~" will appear on a device. If a line is indented then it is a continuation of the previous line and the two combined represent the entire Device Marking for that device.

(6) Lead finish/Ball material - Orderable Devices may have multiple material finish options. Finish options are separated by a vertical ruled line. Lead finish/Ball material values may wrap to two lines if the finish value exceeds the maximum column width.

Important Information and Disclaimer: The information provided on this page represents TI's knowledge and belief as of the date that it is provided. TI bases its knowledge and belief on information provided by third parties, and makes no representation or warranty as to the accuracy of such information. Efforts are underway to better integrate information from third parties. TI has taken and continues to take reasonable steps to provide representative and accurate information but may not have conducted destructive testing or chemical analysis on incoming materials and chemicals. TI and TI suppliers consider certain information to be proprietary, and thus CAS numbers and other limited information may not be available for release.

In no event shall TI's liability arising out of such information exceed the total purchase price of the TI part(s) at issue in this document sold by TI to Customer on an annual basis.

OTHER QUALIFIED VERSIONS OF DS16F95QML, DS16F95QML-SP :

- Military : DS16F95QML
- Space : DS16F95QML-SP

NOTE: Qualified Version Definitions:

- Military - QML certified for Military and Defense Applications
- Space - Radiation tolerant, ceramic packaging and qualified for use in Space-based application

TUBE

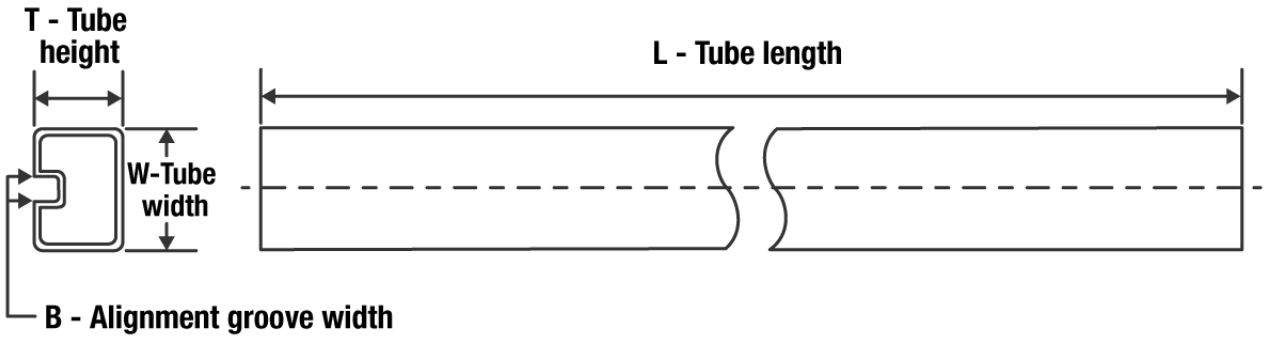

*All dimensions are nominal

Device	Package Name	Package Type	Pins	SPQ	L (mm)	W (mm)	T (µm)	B (mm)
5962-89615012A	NAJ	LCCC	20	50	470	11	3810	0
5962-8961501PA	NAB	CDIP	8	40	502	14	10668	4.32
5962F8961501VHA	NAD	CFP	10	19	502	23	9398	9.78
DS16F95E/883	NAJ	LCCC	20	50	470	11	3810	0
DS16F95J/883	NAB	CDIP	8	40	502	14	10668	4.32
DS16F95W/883	NAD	CFP	10	19	502	23	9398	9.78
DS16F95WFQMLV	NAD	CFP	10	19	502	23	9398	9.78

NAB0008A

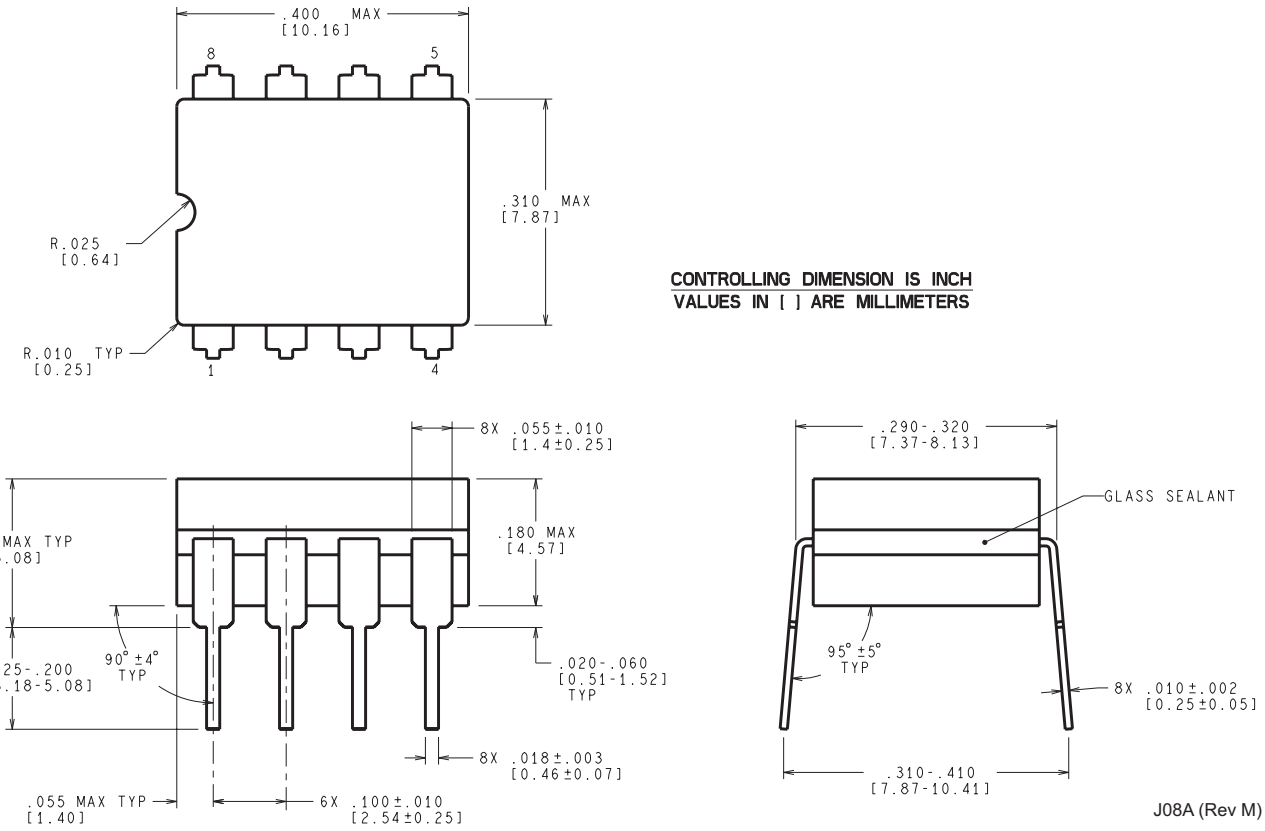
.400 MAX
[10.16]
8
5
.310 MAX
[7.87]
R.025
[0.64]
R.010 TYP
[0.25]
1
4
CONTROLLING DIMENSION IS INCH
VALUES IN [ ] ARE MILLIMETERS
8X .055±.010
[1.4±0.25]
.200 MAX TYP
[5.08]
.180 MAX
[4.57]
8X .125-.200
[3.18-5.08]
90° ±4°
TYP
.020-.060
[0.51-1.52]
TYP
8X .018±.003
[0.46±0.07]
.055 MAX TYP
[1.40]
6X .100±.010
[2.54±0.25]
.290-.320
[7.37-8.13]
GLASS SEALANT
95° ±5°
TYP
8X .010±.002
[0.25±0.05]
.310-.410
[7.87-10.41]
J08A (Rev M)

NAD0010A



PACKAGE OUTLINE

CFP - 2.03 mm max height

CERAMIC FLATPACK

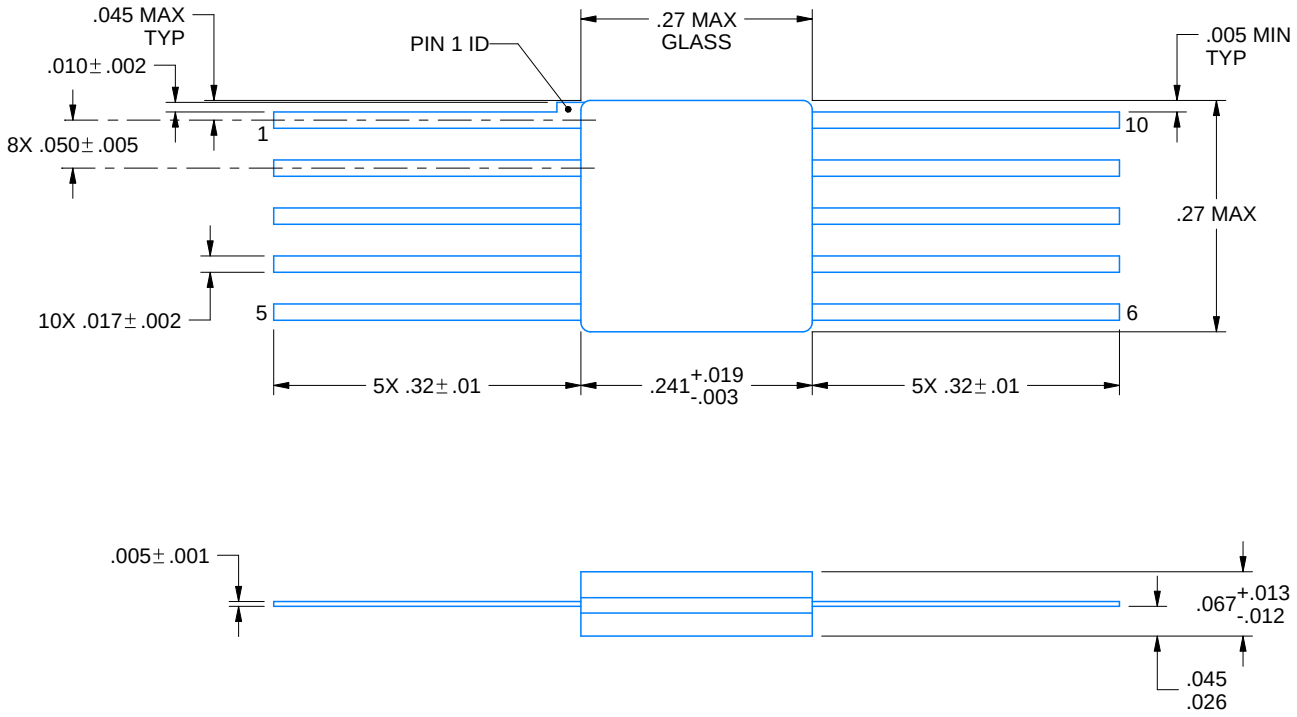

4215191/A 06/2021

NOTES:

1. All linear dimensions are in inches. Any dimensions in parenthesis are for reference only. Dimensioning and tolerancing per ASME Y14.5M.
2. This drawing is subject to change without notice.

NAJ0020A

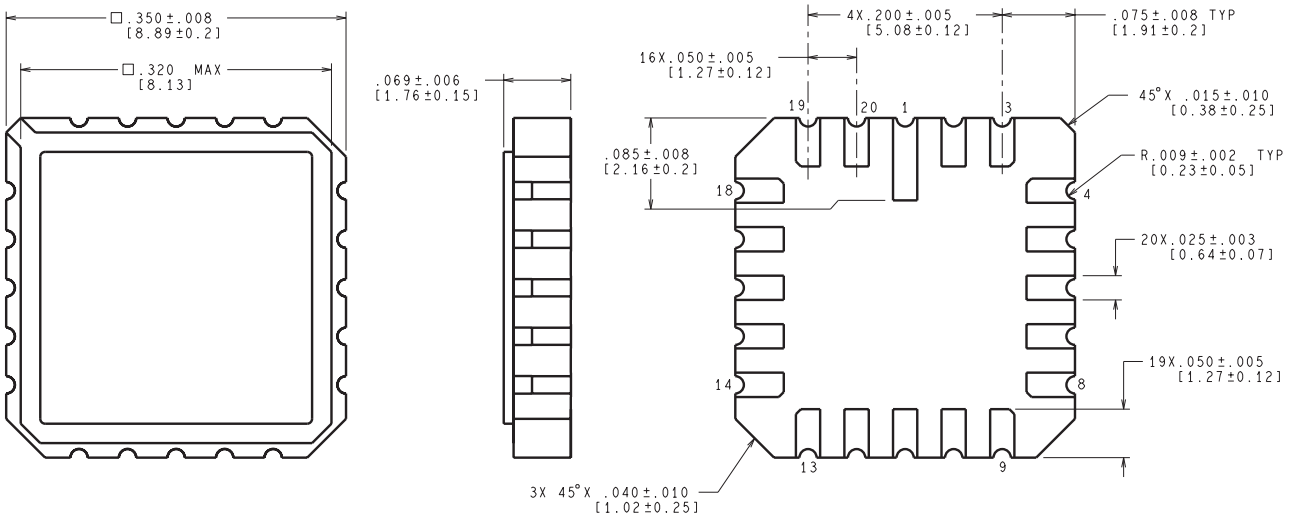

CONTROLLING DIMENSION IS INCH
VALUES IN [ ] ARE MILLIMETERS

E20A (Rev F)

IMPORTANT NOTICE AND DISCLAIMER

TI PROVIDES TECHNICAL AND RELIABILITY DATA (INCLUDING DATA SHEETS), DESIGN RESOURCES (INCLUDING REFERENCE DESIGNS), APPLICATION OR OTHER DESIGN ADVICE, WEB TOOLS, SAFETY INFORMATION, AND OTHER RESOURCES “AS IS” AND WITH ALL FAULTS, AND DISCLAIMS ALL WARRANTIES, EXPRESS AND IMPLIED, INCLUDING WITHOUT LIMITATION ANY IMPLIED WARRANTIES OF MERCHANTABILITY, FITNESS FOR A PARTICULAR PURPOSE OR NON-INFRINGEMENT OF THIRD PARTY INTELLECTUAL PROPERTY RIGHTS.

These resources are intended for skilled developers designing with TI products. You are solely responsible for (1) selecting the appropriate TI products for your application, (2) designing, validating and testing your application, and (3) ensuring your application meets applicable standards, and any other safety, security, regulatory or other requirements.

These resources are subject to change without notice. TI grants you permission to use these resources only for development of an application that uses the TI products described in the resource. Other reproduction and display of these resources is prohibited. No license is granted to any other TI intellectual property right or to any third party intellectual property right. TI disclaims responsibility for, and you will fully indemnify TI and its representatives against, any claims, damages, costs, losses, and liabilities arising out of your use of these resources.

TI’s products are provided subject to TI’s Terms of Sale or other applicable terms available either on ti.com or provided in conjunction with such TI products. TI’s provision of these resources does not expand or otherwise alter TI’s applicable warranties or warranty disclaimers for TI products.

TI objects to and rejects any additional or different terms you may have proposed.

Mailing Address: Texas Instruments, Post Office Box 655303, Dallas, Texas 75265
Copyright © 2022, Texas Instruments Incorporated