BURR - BROWN®

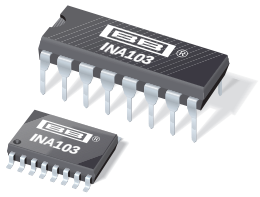

INA103

Low Noise, Low Distortion INSTRUMENTATION AMPLIFIER

FEATURES

- LOW NOISE: 1nV/√Hz
- LOW THD+N: 0.0009% at 1kHz, G = 100
- HIGH GBW: 100MHz at G = 1000
- WIDE SUPPLY RANGE: ±9V to ±25V
- HIGH CMRR: >100dB
- BUILT-IN GAIN SETTING RESISTORS: G = 1, 100
- UPGRADES AD625

APPLICATIONS

- HIGH QUALITY MICROPHONE PREAMPS (REPLACES TRANSFORMERS)
- MOVING-COIL PREAMPLIFIERS
- DIFFERENTIAL RECEIVERS
- AMPLIFICATION OF SIGNALS FROM:
  Strain Gages (Weigh Scale Applications)
  Thermocouples
  Bridge Transducers

DESCRIPTION

The INA103 is a very low noise, low distortion monolithic instrumentation amplifier. Its current-feedback circuitry achieves very wide bandwidth and excellent dynamic response. It is ideal for low-level audio signals such as balanced low-impedance microphones. The INA103 provides near-theoretical limit noise performance for 200Ω source impedances. Many industrial applications also benefit from its low noise and wide bandwidth.

Unique distortion cancellation circuitry reduces distortion to extremely low levels, even in high gain. Its balanced input, low noise and low distortion provide superior performance compared to transformer-coupled microphone amplifiers used in professional audio equipment.

The INA103's wide supply voltage (±9 to ±25V) and high output current drive allow its use in high-level audio stages as well. A copper lead frame in the plastic DIP assures excellent thermal performance.

The INA103 is available in 16-pin plastic DIP and SOL-16 surface-mount packages. Commercial and Industrial temperature range models are available.

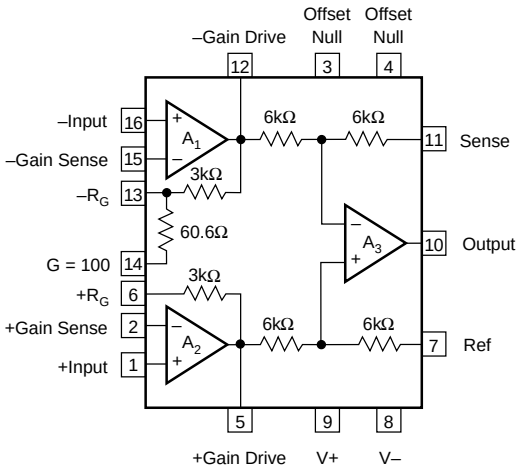

International Airport Industrial Park • Mailing Address: PO Box 11400, Tucson, AZ 85734 • Street Address: 6730 S. Tucson Blvd., Tucson, AZ 85706 • Tel: (520) 746-1111 • Twx: 910-952-1111
Internet: http://www.burr-brown.com/ • FAXLine: (800) 548-6133 (US/Canada Only) • Cable: BBRCORP • Telex: 066-6491 • FAX: (520) 889-1510 • Immediate Product Info: (800) 548-6132

©1990 Burr-Brown Corporation
PDS-1016H
Printed in U.S.A. March, 1998

SBOS003

SPECIFICATIONS

All specifications at T_A = +25°C, V_S = ±15V and R_L = 2kΩ, unless otherwise noted.

PARAMETER	CONDITIONS	INA103KP, KU MIN	TYP	MAX	UNITS
GAIN					
Range of Gain		1		1000	V/V
Gain Equation [1]			G = 1 + 6kΩ/R_G		V/V
Gain Error, DC G = 1	±10V Output		0.005	0.05	%
G = 100			0.07	0.25	%
Equation			0.05		%
Gain Temp. Co. G = 1	±10V Output		10		ppm/°C
G = 100			25		ppm/°C
Equation			25		ppm/°C
Nonlinearity, DC G = 1	±10V Output		0.0003	0.01	% of FS[2]
G = 100			0.0006	0.01	% of FS
OUTPUT					
Voltage, R_L = 600Ω	$T_A = T_{MIN}$ to T_{MAX}	±11.5	±12		V
R_L = 600Ω	V_S = ±25, T_A = 25°C	±20	±21		V
Current	$T_A = T_{MIN}$ to T_{MAX}	±40			mA
Short Circuit Current			±70		mA
Capacitive Load Stability			10		nF
INPUT OFFSET VOLTAGE					
Initial Offset RTI [3]			(30 + 1200/G)		µV
(KU Grade)				(250+ 5000/G)	µV
vs Temp G = 1 to 1000	$T_A = T_{MIN}$ to T_{MAX}		1 + 20/G		µV/°C
G = 1000	$T_A = T_{MIN}$ to T_{MAX}				µV/°C
vs Supply	±9V to ±25V		0.2 + 8/G	4 + 60/G	µV/V
INPUT BIAS CURRENT					
Initial Bias Current			2.5	12	µA
vs Temp	$T_A = T_{MIN}$ to T_{MAX}		15		nA/°C
Initial Offset Current			0.04	1	µA
vs Temp	$T_A = T_{MIN}$ to T_{MAX}		0.5		nA/°C
INPUT IMPEDANCE					
Differential Mode			60 || 2		MΩ || pF
Common-Mode			60 || 5		MΩ || pF
INPUT VOLTAGE RANGE					
Common-Mode Range [4]		±11	±12		V
CMR					
G = 1	DC to 60Hz	72	86		dB
G = 100	DC to 60Hz	100	125		dB
INPUT NOISE					
Voltage [5]	R_S = 0Ω				
10Hz			2		nV/√Hz
100Hz			1.2		nV/√Hz
1kHz			1		nV/√Hz
Current, 1kHz			2		pA/√Hz
OUTPUT NOISE					
Voltage	1kHz		65		nV/√Hz
A Weighted, 20Hz-20kHz	20Hz-20kHz		–100		dBu
DYNAMIC RESPONSE					
–3dB Bandwidth: G = 1	Small Signal		6		MHz
G = 100	Small Signal		800		kHz
Full Power Bandwidth	G = 1				
V_{OUT} = ±10V, R_L = 600Ω			240		kHz
Slew Rate	G = 1 to 500		15		V/µs
THD + Noise	G = 100, f = 1kHz		0.0009		%
Settling Time 0.1%					
G = 1	V_O = 20V Step		1.7		µs
G = 100			1.5		µs
Settling Time 0.01%					
G = 1	V_O = 20V Step		2		µs
G = 100			3.5		µs
Overload Recovery [6]	50% Overdrive		1		µs

NOTES: (1) Gains other than 1 and 100 can be set by adding an external resistor, R_G between pins 2 and 15. Gain accuracy is a function of R_G. (2) FS = Full Scale. (3) Adjustable to zero. (4) V_O = 0V, see Typical Curves for V_{CM} vs V_O. (5) $V_{NOISE\ RTI} = \sqrt{V^2_{N\ INPUT} + (V_{N\ OUTPUT}/Gain)^2 + 4KTR_G}$. See Typical Curves. (6) Time required for output to return from saturation to linear operation following the removal of an input overdrive voltage.

SPECIFICATIONS (CONT)

All specifications at T_A = +25°C, V_S = ±15V and R_L = 2kΩ, unless otherwise noted.

PARAMETER	CONDITIONS	INA103KP, KU MIN	TYP	MAX	UNITS
POWER SUPPLY					
Rated Voltage			±15		V
Voltage Range		±9		±25	V
Quiescent Current			9	12.5	mA
TEMPERATURE RANGE					
Specification		0		+70	°C
Operation		–40		+85	°C
Storage		–40		+100	°C
Thermal Resistance, θ_{JA}			100		°C/W

PIN CONFIGURATION

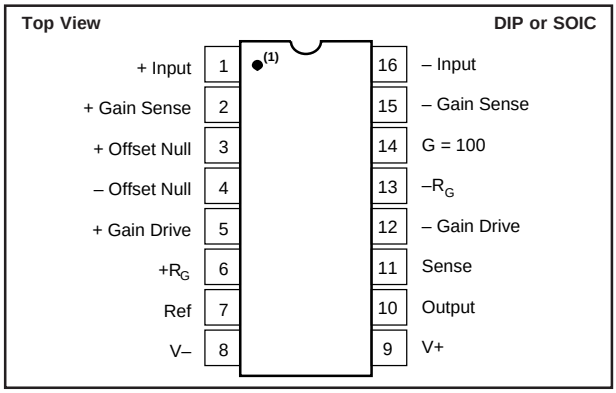

NOTE: (1) Pin 1 Marking—SOL-16 Package

PACKAGE/ORDERING INFORMATION

PRODUCT	PACKAGE	PACKAGE DRAWING NUMBER(1)	TEMPERATURE RANGE
INA103KP	Plastic DIP	180	0°C to +70°C
INA103KU	SOL-16	211	0°C to +70°C

NOTE: (1) For detailed drawing and dimension table, please see end of data sheet, or Appendix C of Burr-Brown IC Data Book.

ELECTROSTATIC DISCHARGE SENSITIVITY

Any integrated circuit can be damaged by ESD. Burr-Brown recommends that all integrated circuits be handled with appropriate precautions. Failure to observe proper handling and installation procedures can cause damage.

ESD damage can range from subtle performance degradation to complete device failure. Precision integrated circuits may be more susceptible to damage because very small parametric changes could cause the device not to meet published specifications.

ABSOLUTE MAXIMUM RATINGS(1)

Power Supply Voltage	±25V
Input Voltage Range, Continuous	$\pm V_S$
Operating Temperature Range:	–40°C to +85°C
Storage Temperature Range:	–40°C to +85°C
Junction Temperature:	
P, U Package	+125°C
Lead Temperature (soldering, 10s)	+300°C
Output Short Circuit to Common	Continuous

NOTE: (1) Stresses above these ratings may cause permanent damage.

The information provided herein is believed to be reliable; however, BURR-BROWN assumes no responsibility for inaccuracies or omissions. BURR-BROWN assumes no responsibility for the use of this information, and all use of such information shall be entirely at the user's own risk. Prices and specifications are subject to change without notice. No patent rights or licenses to any of the circuits described herein are implied or granted to any third party. BURR-BROWN does not authorize or warrant any BURR-BROWN product for use in life support devices and/or systems.

TYPICAL PERFORMANCE CURVES

At T_A = +25°C, V_S = ±15V, unless otherwise noted.

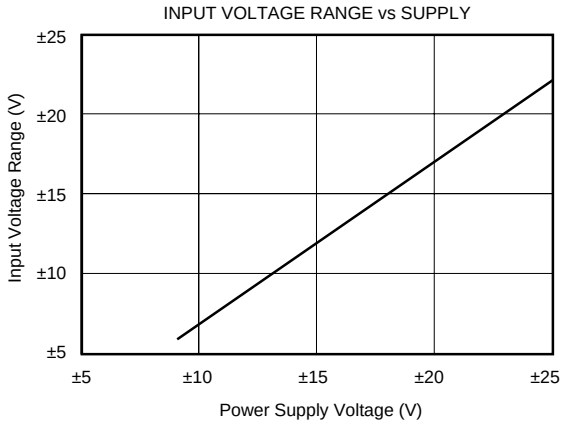

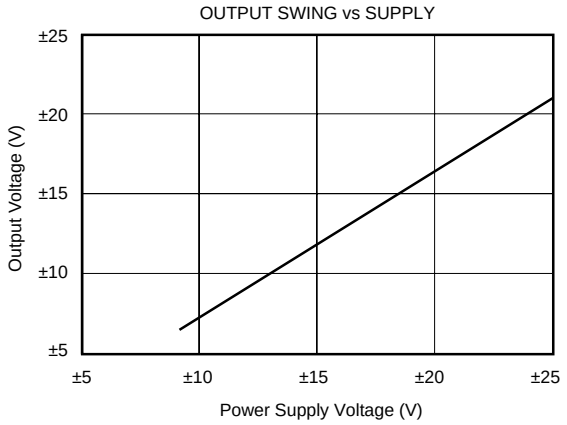

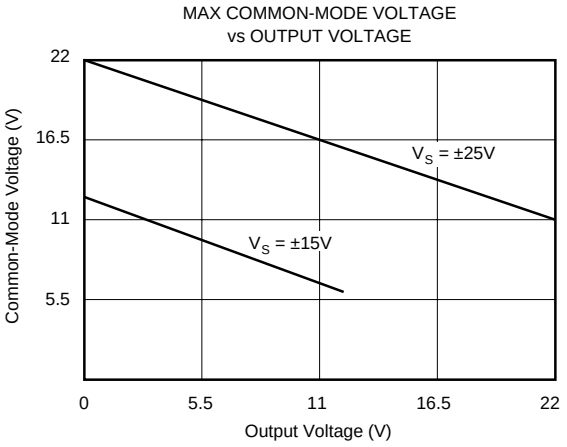

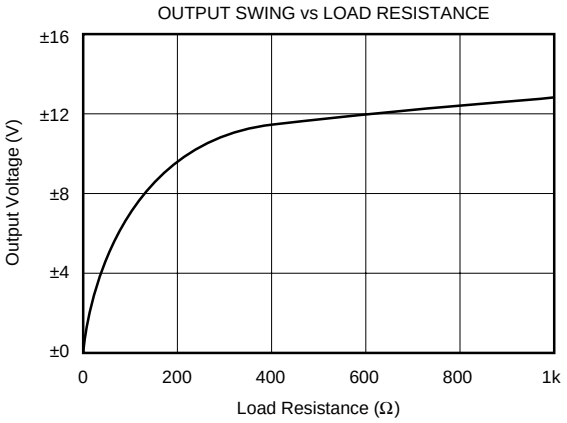

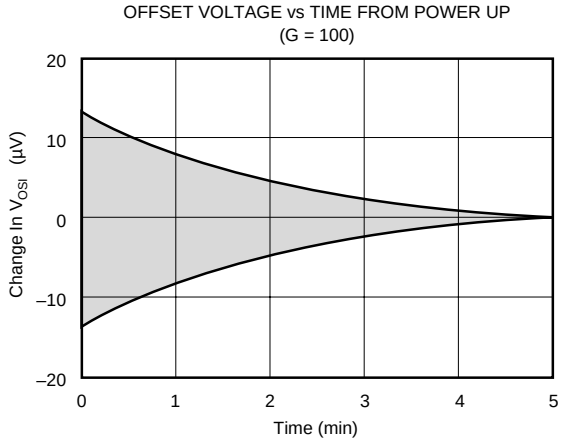

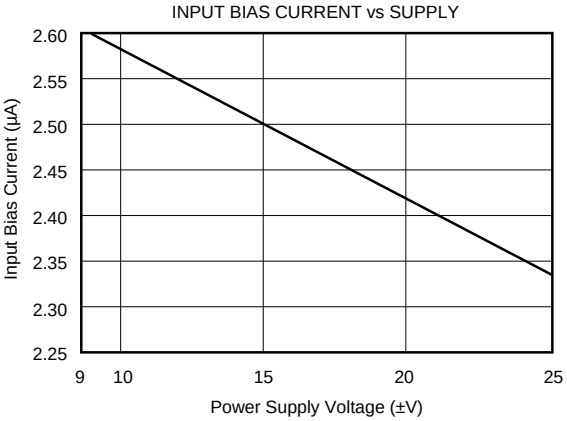

TYPICAL PERFORMANCE CURVES (CONT)

At T_A = +25°C, V_S = ±15V, unless otherwise noted.

INPUT BIAS CURRENT vs TEMPERATURE

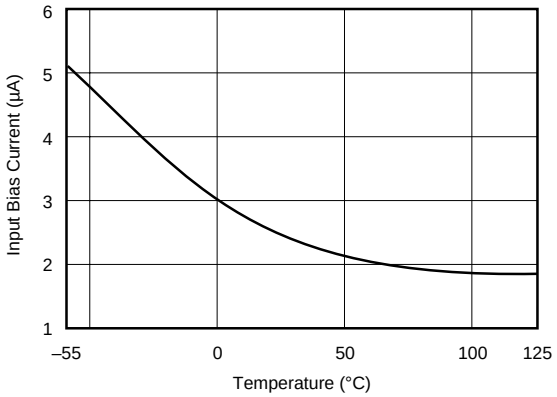

SMALL SIGNAL TRANSIENT RESPONSE
(G = 1)

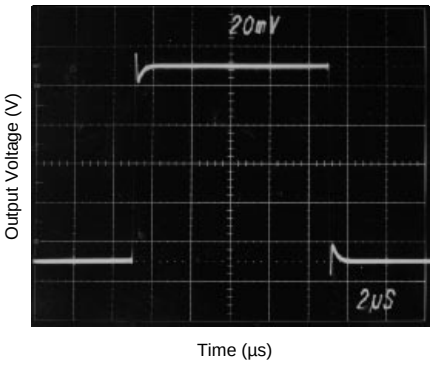

SMALL SIGNAL TRANSIENT RESPONSE
(G = 100)

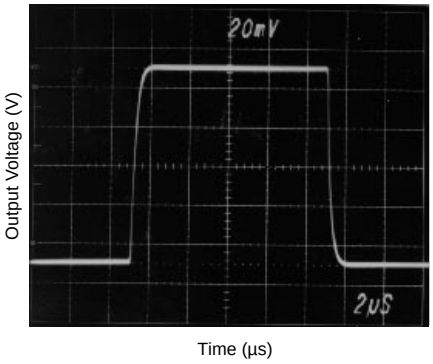

LARGE SIGNAL TRANSIENT RESPONSE
(G = 1)

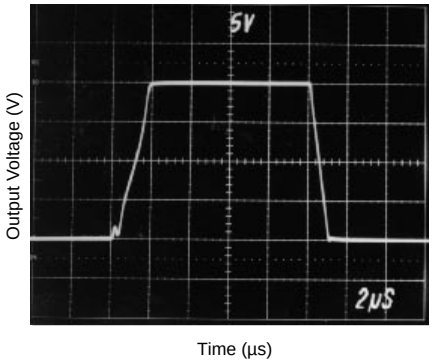

LARGE SIGNAL TRANSIENT RESPONSE
(G = 100)

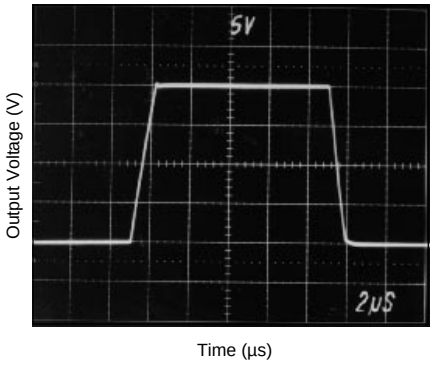

SETTLING TIME vs GAIN
(0.1%, 20V STEP)

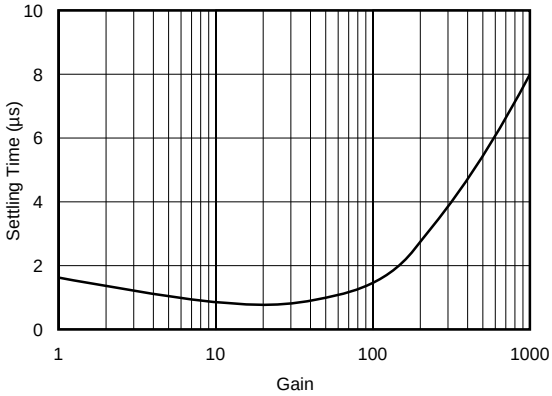

TYPICAL PERFORMANCE CURVES (CONT)

At T_A = +25°C, V_S = ±15V, unless otherwise noted.

SETTLING TIME vs GAIN
(0.01%, 20V STEP)

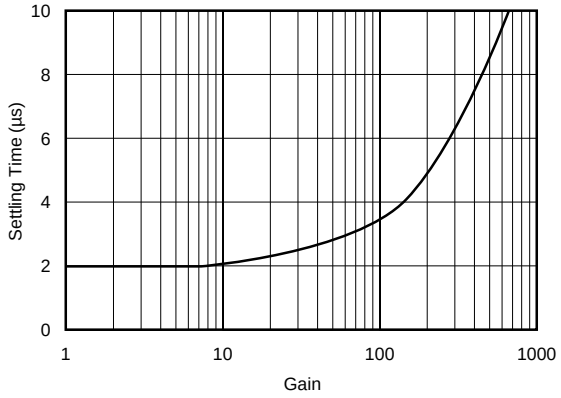

SMALL-SIGNAL FREQUENCY RESPONSE

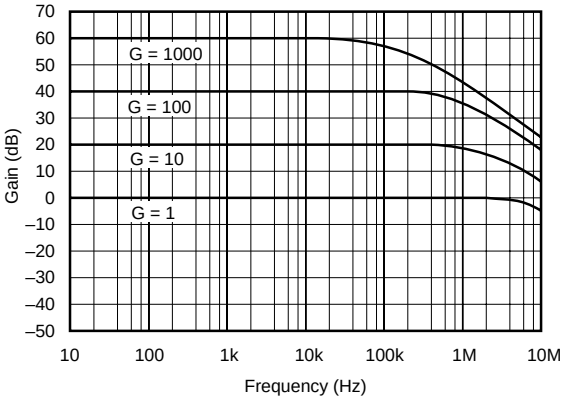

NOISE VOLTAGE (RTI) vs FREQUENCY

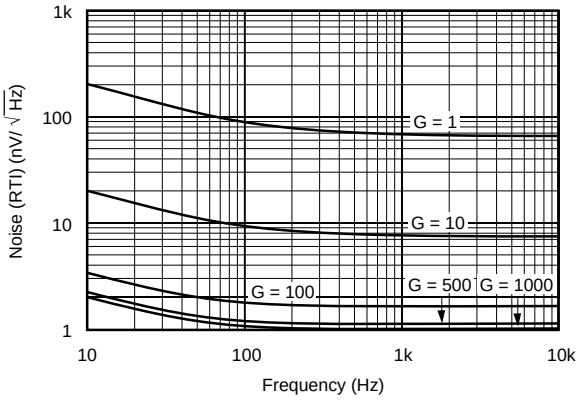

CMR vs FREQUENCY

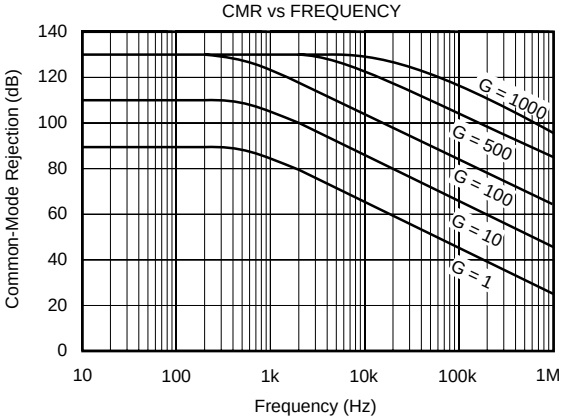

THD + N vs FREQUENCY

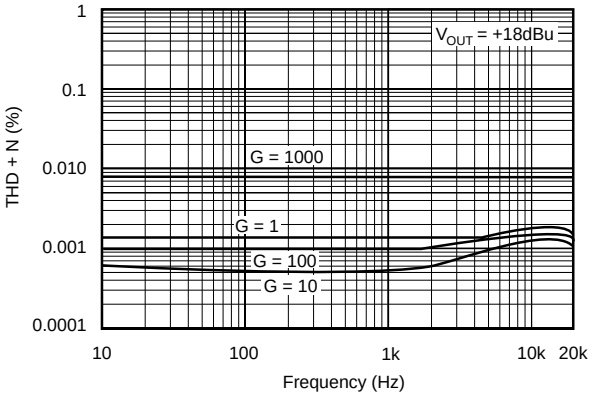

V+ POWER SUPPLY REJECTION
vs FREQUENCY

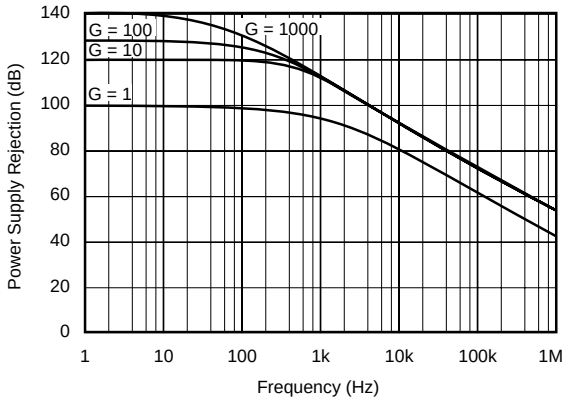

TYPICAL PERFORMANCE CURVES (CONT)

At T_A = +25°C, V_S = ±15V, unless otherwise noted.

V– POWER SUPPLY REJECTION vs FREQUENCY

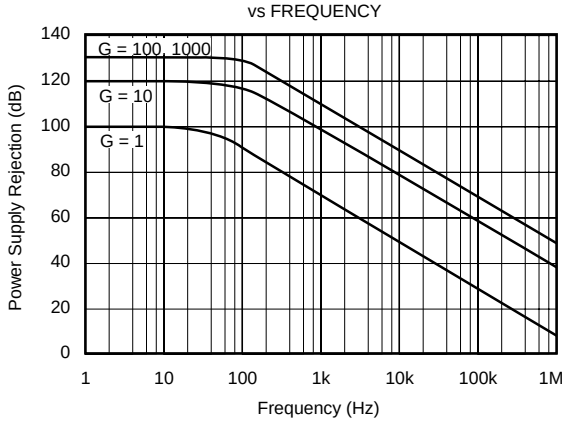

THD + N vs LEVEL

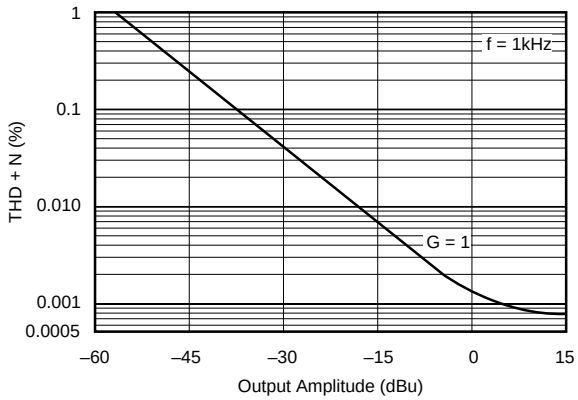

THD + N vs LOAD

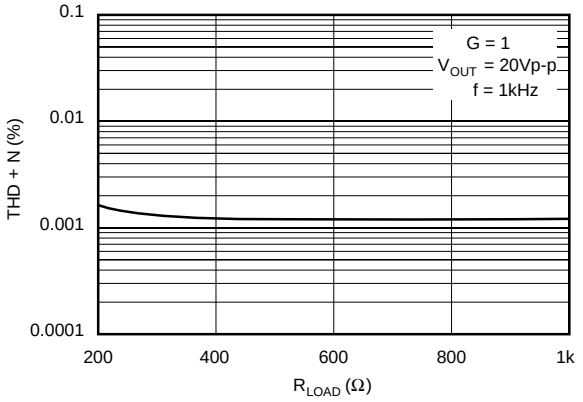

CCIF IMD vs AMPLITUDE

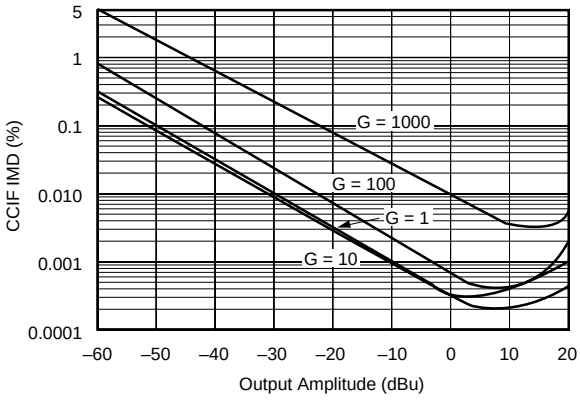

CCIF IMD vs FREQUENCY

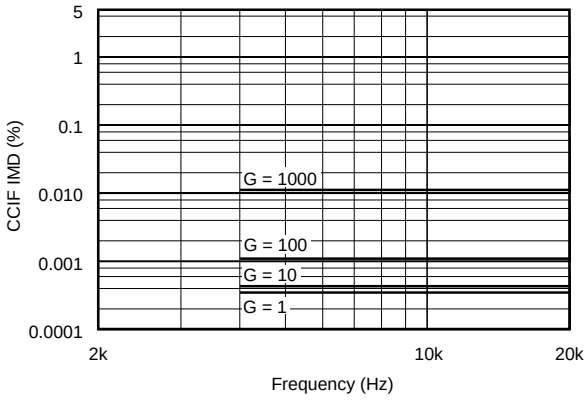

SMPTE IMD vs AMPLITUDE

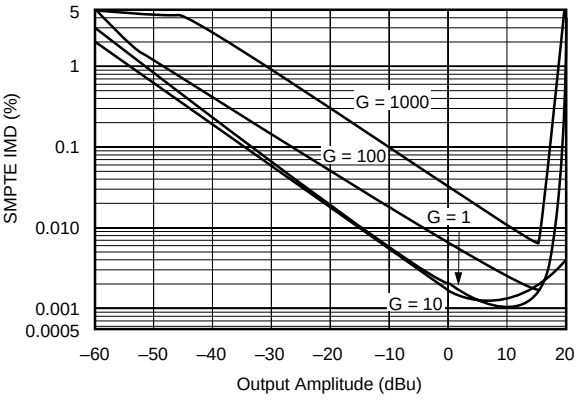

TYPICAL PERFORMANCE CURVES (CONT)

At T_A = +25°C, V_S = ±15V unless, otherwise noted.

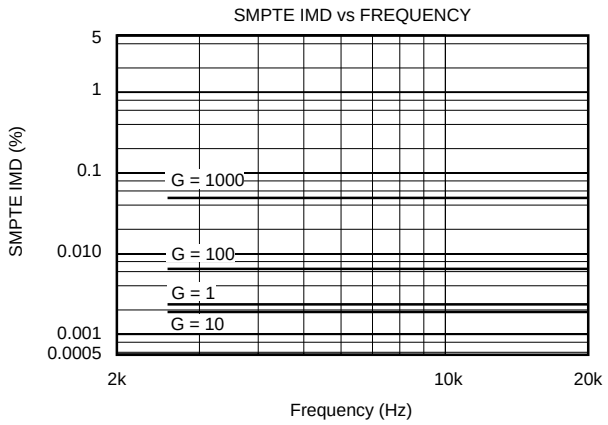

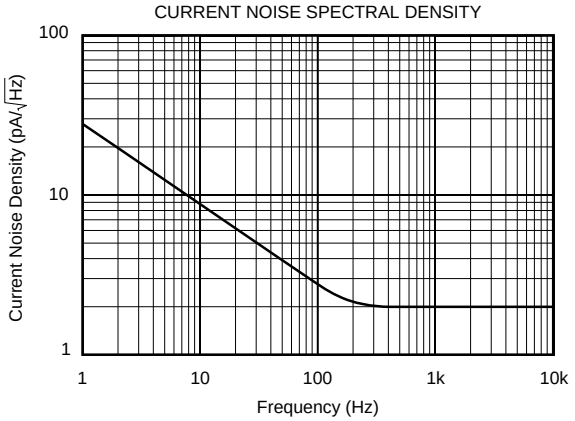

APPLICATIONS INFORMATION

Figure 1 shows the basic connections required for operation. Power supplies should be bypassed with 1µF tantalum capacitors near the device pins. The output Sense (pin 11) and output Reference (pin 7) should be low impedance connections. Resistance of a few ohms in series with these connections will degrade the common-mode rejection of the amplifier.

To avoid oscillations, make short, direct connection to the gain set resistor and gain sense connections. Avoid running output signals near these sensitive input nodes.

INPUT CONSIDERATIONS

Certain source impedances can cause the INA103 to oscillate. This depends on circuit layout and source or cable characteristics connected to the input. An input network consisting of a small inductor and resistor (Figure 2) can greatly reduce the tendancy to oscillate. This is especially useful if various input sources are connected to the INA103. Although not shown in other figures, this network can be used, if needed, with all applications shown.

GAIN SELECTION

Gains of 1 or 100V/V can be set without external resistors. For G = 1V/V (unity gain) leave pin 14 open (no connection)—see Figure 4. For G = 100V/V, connect pin 14 to pin 6—see Figure 5.

Gain can also be accurately set with a single external resistor as shown in Figure 1. The two internal feedback resistors are laser-trimmed to 3kΩ within approximately ±0.1%. The temperature coefficient of these resistors is approximately 50ppm/°C. Gain using an external R_G resistor is—

$$G = 1 + \frac{6k\Omega}{R_G}$$

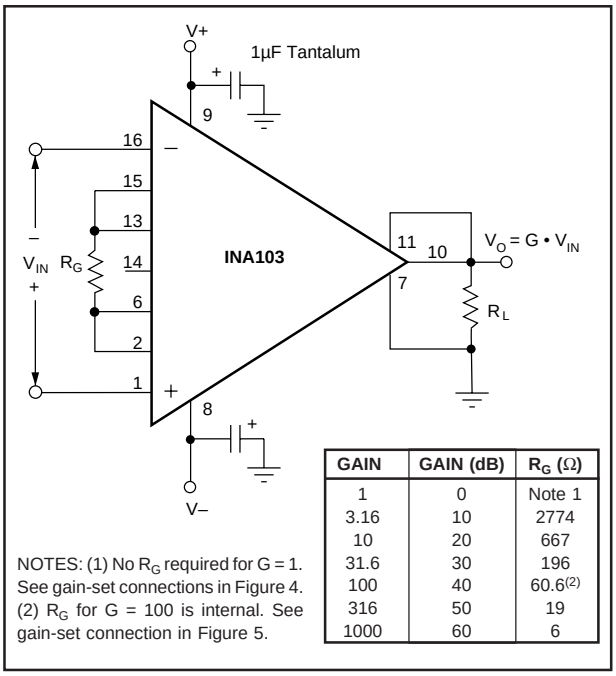

GAIN	GAIN (dB)	R_G (Ω)
1	0	Note 1
3.16	10	2774
10	20	667
31.6	30	196
100	40	60.6(2)
316	50	19
1000	60	6

NOTES: (1) No R_G required for G = 1. See gain-set connections in Figure 4. (2) R_G for G = 100 is internal. See gain-set connection in Figure 5.

FIGURE 1. Basic Circuit Configuration.

Accuracy and TCR of the external R_G will also contribute to gain error and temperature drift. These effects can be directly inferred from the gain equation.

Connections available on A_1 and A_2 allow external resistors to be substituted for the internal 3kΩ feedback resistors. A precision resistor network can be used for very accurate and stable gains. To preserve the low noise of the INA103, the value of external feedback resistors should be kept low. Increasing the feedback resistors to 20kΩ would increase noise of the INA103 to approximately $1.5nV/\sqrt{Hz}$. Due to the current-feedback input circuitry, bandwidth would also be reduced.

NOISE PERFORMANCE

The INA103 provides very low noise with low source impedance. Its $1nV/\sqrt{Hz}$ voltage noise delivers near theoretical noise performance with a source impedance of 200Ω.

Relatively high input stage current is used to achieve this low noise. This results in relatively high input bias current and input current noise. As a result, the INA103 may not provide best noise performance with source impedances greater than 10kΩ. For source impedance greater than 10kΩ, consider the INA114 (excellent for precise DC applications), or the INA111 FET-input IA for high speed applications.

OFFSET ADJUSTMENT

Offset voltage of the INA103 has two components: input stage offset voltage is produced by A_1 and A_2; and, output stage offset is produced by A_3. Both input and output stage offset are laser trimmed and may not need adjustment in many applications.

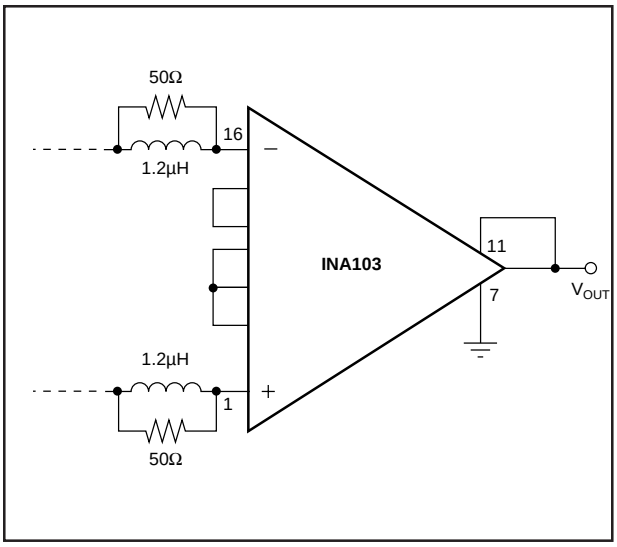

FIGURE 2. Input Stabilization Network.

Offset voltage can be trimmed with the optional circuit shown in Figure 3. This offset trim circuit primarily adjusts the output stage offset, but also has a small effect on input stage offset. For a 1mV adjustment of the output voltage, the input stage offset is adjusted approximately 1µV. Use this adjustment to null the INA103's offset voltage with zero differential input voltage. Do not use this adjustment to null offset produced by a sensor, or offset produced by subsequent stages, since this will increase temperature drift.

To offset the output voltage without affecting drift, use the circuit shown in Figure 4. The voltage applied to pin 7 is summed at the output. The op amp connected as a buffer provides a low impedance at pin 7 to assure good common-mode rejection.

Figure 5 shows a method to trim offset voltage in AC-coupled applications. A nearly constant and equal input bias current of approximately 2.5µA flows into both input terminals. A variable input trim voltage is created by adjusting the balance of the two input bias return resistances through which the input bias currents must flow.

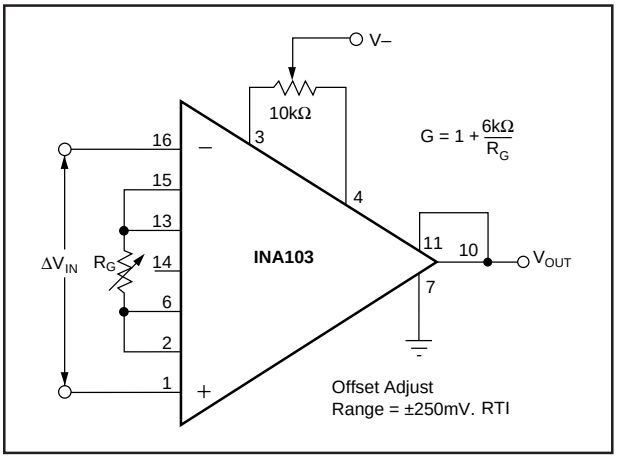

FIGURE 3. Offset Adjustment Circuit.

Figure 6 shows an active control loop that adjusts the output offset voltage to zero. A_2, R, and C form an integrator that produces an offsetting voltage applied to one input of the INA103. This produces a –6dB/octave low frequency roll-off like the capacitor input coupling in Figure 5.

COMMON-MODE INPUT RANGE

For proper operation, the combined differential input signal and common-mode input voltage must not cause the input amplifiers to exceed their output swing limits. The linear input range is shown in the typical performance curve "Maximum Common-Mode Voltage vs Output Voltage." For a given total gain, the input common-mode range can be increased by reducing the input stage gain and increasing the output stage gain with the circuit shown in Figure 7.

OUTPUT SENSE

An output sense terminal allows greater gain accuracy in driving the load. By connecting the sense connection at the load, I•R voltage loss to the load is included inside the feedback loop. Current drive can be increased by connecting a current booster inside the feedback loop as shown in Figure 11.

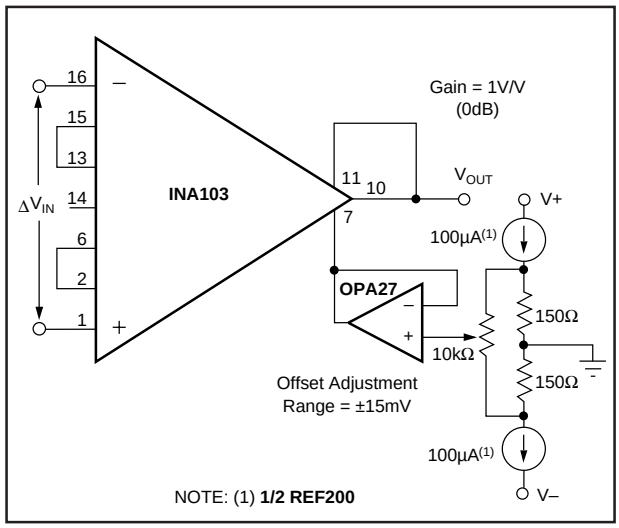

FIGURE 4. Output Offsetting.

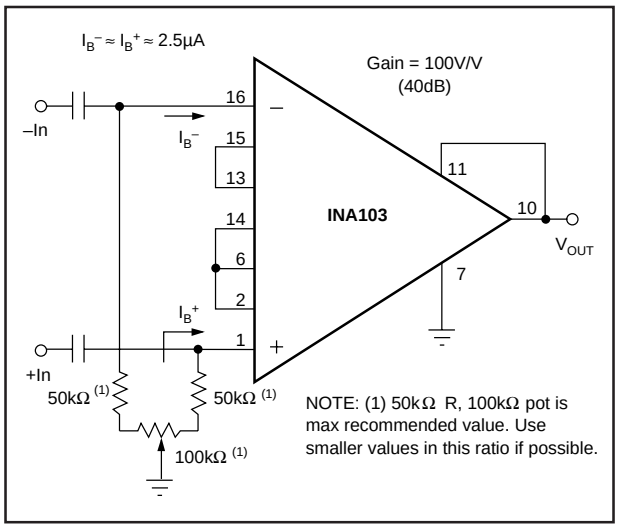

FIGURE 5. Input Offset Adjustment for AC-Coupled Inputs.

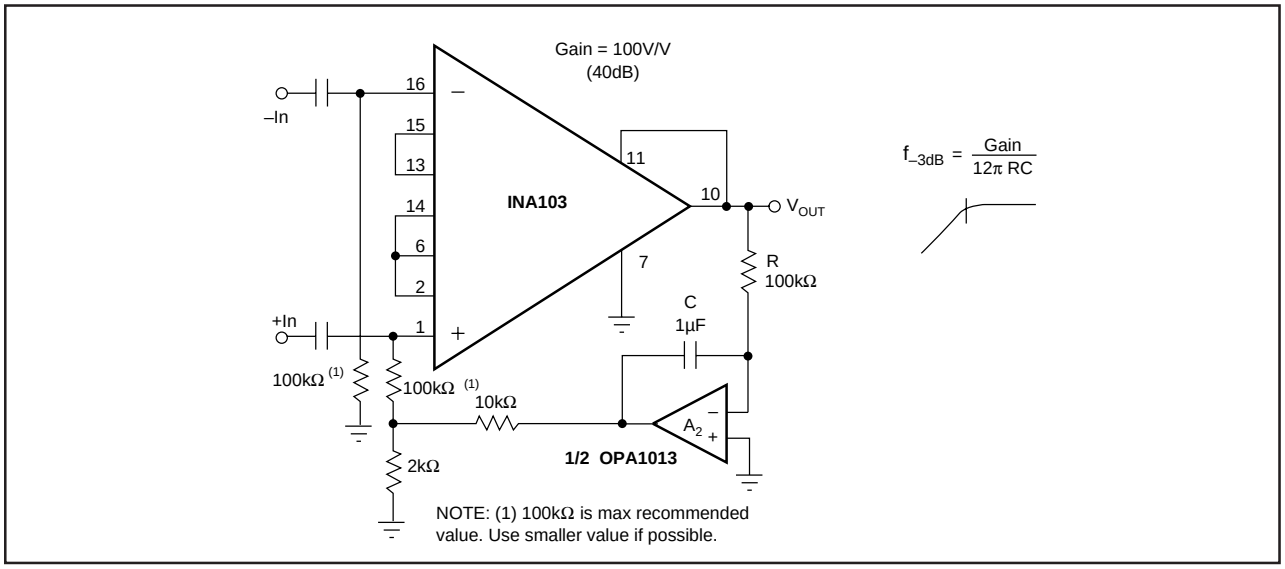

FIGURE 6. Automatic DC Restoration.

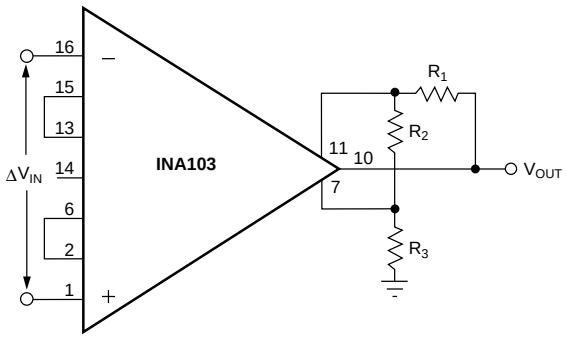

Output Stage Gain =

$$\frac{(R_2 \parallel 12k) + R_1 + R_3}{(R_2 \parallel 12k)}$$

OUTPUT STAGE GAIN	R_1 and R_3 (kΩ)	R_2 (Ω)
2	1k	2.4k
5	1.2k	632Ω
10	1.2k	273Ω

FIGURE 7. Gain Adjustment of Output Stage.

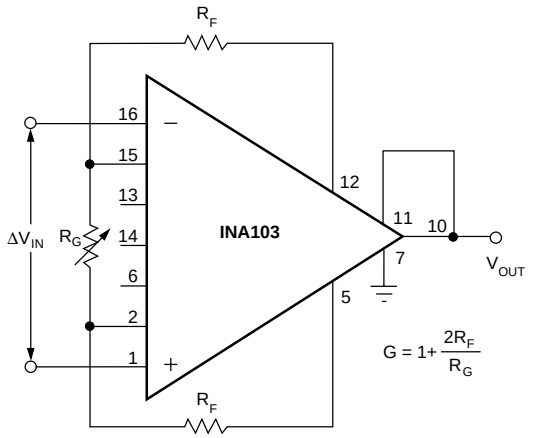

R_F > 10kΩ can increase noise and reduce bandwidth—see text.
NOTE: AD625 equivalent pinout.

FIGURE 8. Use of External Resistors for Gain Set.

(a) AD625 G = 1, V_{IN} = ±15V, R_L = 600Ω

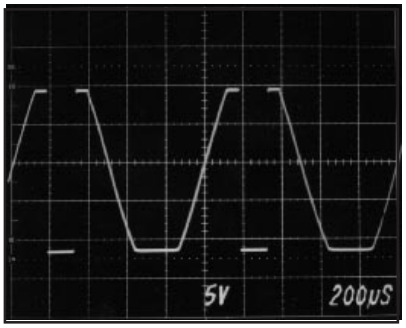

(b) INA103 G = 1, V_{IN} = ±15V, R_L = 600Ω

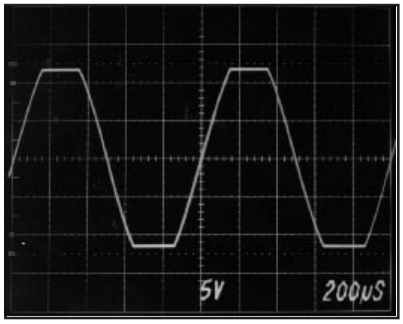

A common problem with many IC op amps and instrumentation amplifiers is shown in (a). Here, the amplifier's input is driven beyond its linear common-mode range, forcing the output of the amplifier into the supply rails. The output then "folds back", i.e., a more positive input voltage now causes the output of the amplifier to go negative. The INA103 has protection circuitry to prevent fold-back, and as shown in (b), limits cleanly.

FIGURE 9. INA103 Overload Condition Performance.

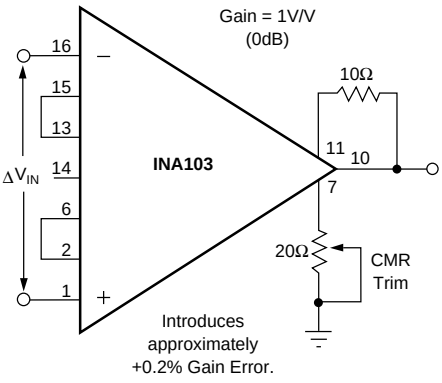

FIGURE 10. Optional Circuit for Externally Trimming CMR.

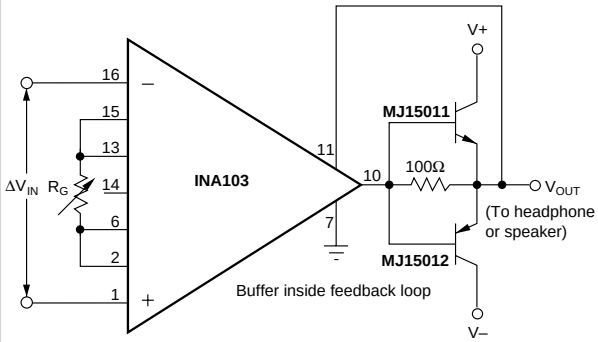

FIGURE 11. Increasing Output Circuit Drive.

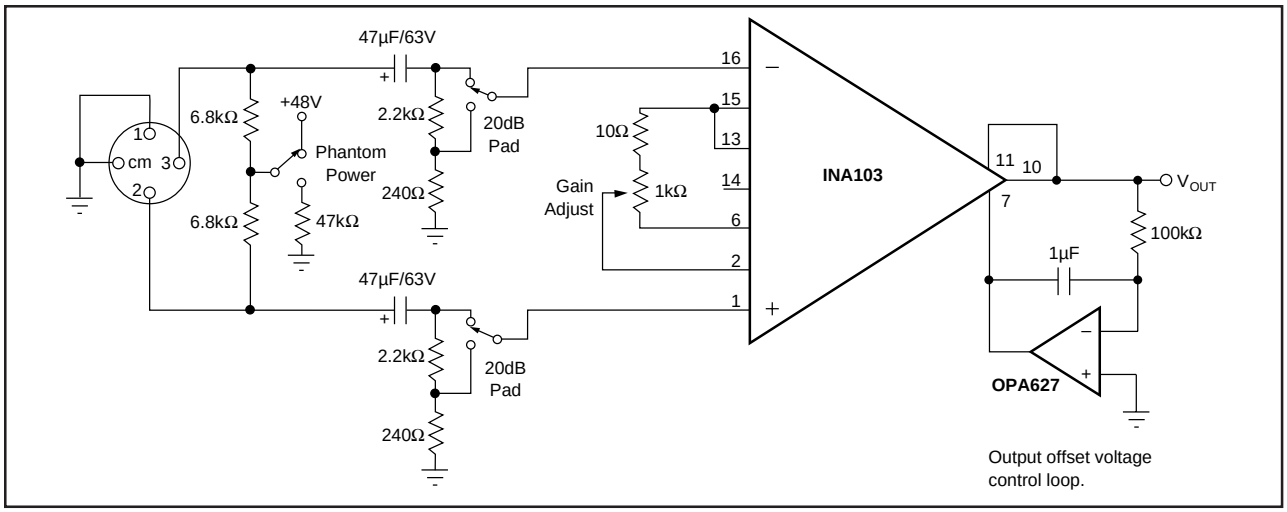

FIGURE 12. Microphone Preamplifier with Provision for Phantom Power Microphones.

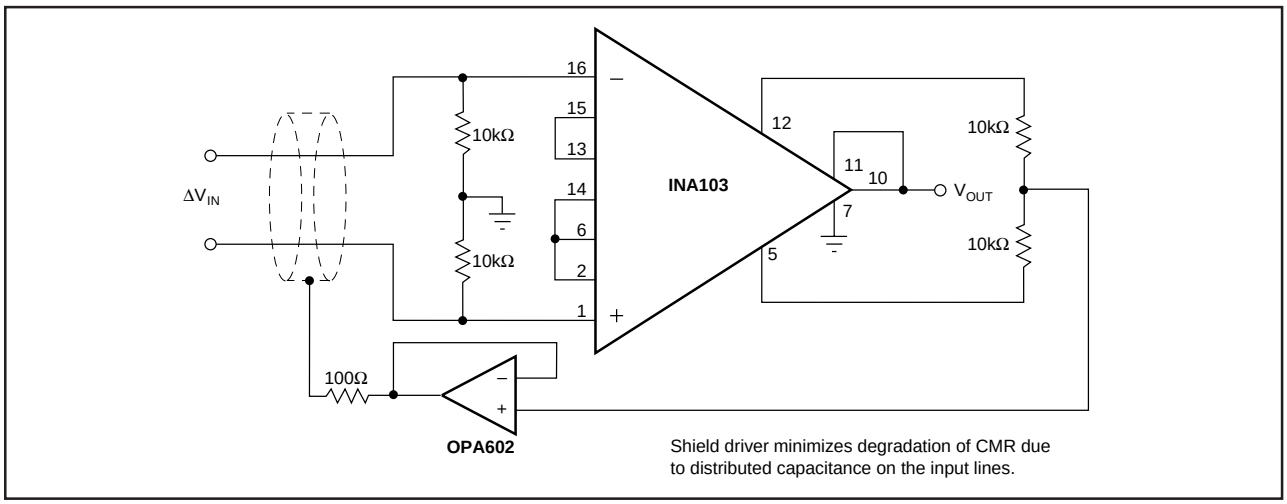

FIGURE 13. Instrumentation Amplifier with Shield Driver.

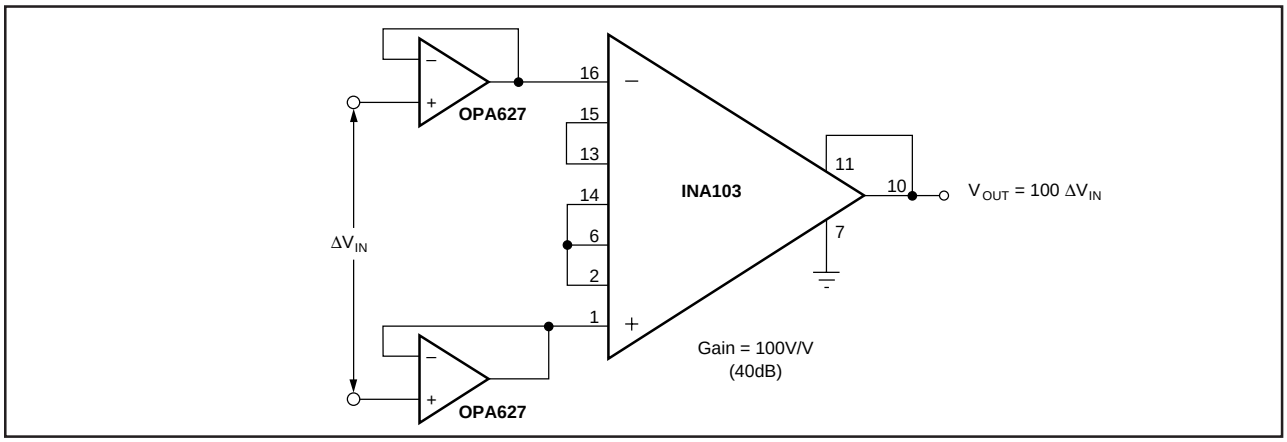

FIGURE 14. Gain-of-100 INA103 with FET Buffers.

PACKAGING INFORMATION

Orderable Device	Status (1)	Package Type	Package Drawing	Pins	Package Qty	Eco Plan (2)	Lead finish/ Ball material (6)	MSL Peak Temp (3)	Op Temp (°C)	Device Marking (4/5)	Samples
INA103KP	ACTIVE	PDIP	N	16	25	RoHS & Green	NIPDAU	N / A for Pkg Type	-40 to 85	INA103KP	Samples
INA103KPG4	ACTIVE	PDIP	N	16	25	RoHS & Green	NIPDAU	N / A for Pkg Type	-40 to 85	INA103KP	Samples
INA103KU	ACTIVE	SOIC	DW	16	40	RoHS & Green	NIPDAU-DCC	Level-3-260C-168 HR		INA103KU	Samples
INA103KU/1K	ACTIVE	SOIC	DW	16	1000	RoHS & Green	NIPDAU-DCC	Level-3-260C-168 HR		INA103KU	Samples
INA103KU/1KE4	ACTIVE	SOIC	DW	16	1000	RoHS & Green	NIPDAU-DCC	Level-3-260C-168 HR		INA103KU	Samples

(1) The marketing status values are defined as follows:
ACTIVE: Product device recommended for new designs.
LIFEBUY: TI has announced that the device will be discontinued, and a lifetime-buy period is in effect.
NRND: Not recommended for new designs. Device is in production to support existing customers, but TI does not recommend using this part in a new design.
PREVIEW: Device has been announced but is not in production. Samples may or may not be available.
OBSOLETE: TI has discontinued the production of the device.

(2) **RoHS:** TI defines "RoHS" to mean semiconductor products that are compliant with the current EU RoHS requirements for all 10 RoHS substances, including the requirement that RoHS substance do not exceed 0.1% by weight in homogeneous materials. Where designed to be soldered at high temperatures, "RoHS" products are suitable for use in specified lead-free processes. TI may reference these types of products as "Pb-Free".
RoHS Exempt: TI defines "RoHS Exempt" to mean products that contain lead but are compliant with EU RoHS pursuant to a specific EU RoHS exemption.
Green: TI defines "Green" to mean the content of Chlorine (Cl) and Bromine (Br) based flame retardants meet JS709B low halogen requirements of <=1000ppm threshold. Antimony trioxide based flame retardants must also meet the <=1000ppm threshold requirement.

(3) MSL, Peak Temp. - The Moisture Sensitivity Level rating according to the JEDEC industry standard classifications, and peak solder temperature.

(4) There may be additional marking, which relates to the logo, the lot trace code information, or the environmental category on the device.

(5) Multiple Device Markings will be inside parentheses. Only one Device Marking contained in parentheses and separated by a "~" will appear on a device. If a line is indented then it is a continuation of the previous line and the two combined represent the entire Device Marking for that device.

(6) Lead finish/Ball material - Orderable Devices may have multiple material finish options. Finish options are separated by a vertical ruled line. Lead finish/Ball material values may wrap to two lines if the finish value exceeds the maximum column width.

Important Information and Disclaimer: The information provided on this page represents TI's knowledge and belief as of the date that it is provided. TI bases its knowledge and belief on information provided by third parties, and makes no representation or warranty as to the accuracy of such information. Efforts are underway to better integrate information from third parties. TI has taken and continues to take reasonable steps to provide representative and accurate information but may not have conducted destructive testing or chemical analysis on incoming materials and chemicals. TI and TI suppliers consider certain information to be proprietary, and thus CAS numbers and other limited information may not be available for release.

In no event shall TI's liability arising out of such information exceed the total purchase price of the TI part(s) at issue in this document sold by TI to Customer on an annual basis.

TAPE AND REEL INFORMATION

REEL DIMENSIONS

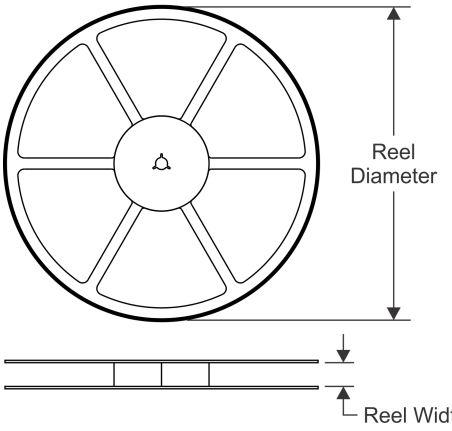

TAPE DIMENSIONS

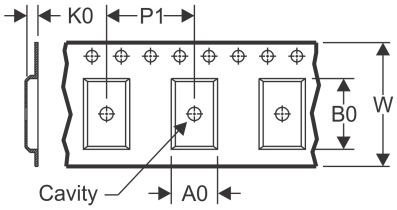

A0	Dimension designed to accommodate the component width
B0	Dimension designed to accommodate the component length
K0	Dimension designed to accommodate the component thickness
W	Overall width of the carrier tape
P1	Pitch between successive cavity centers

QUADRANT ASSIGNMENTS FOR PIN 1 ORIENTATION IN TAPE

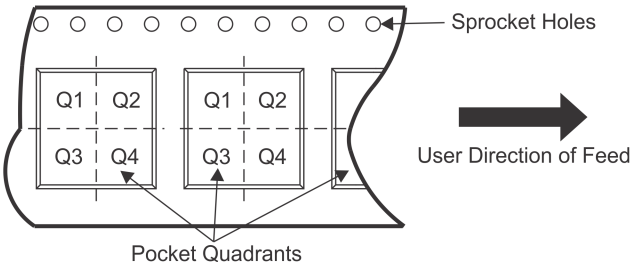

*All dimensions are nominal

Device	Package Type	Package Drawing	Pins	SPQ	Reel Diameter (mm)	Reel Width W1 (mm)	A0 (mm)	B0 (mm)	K0 (mm)	P1 (mm)	W (mm)	Pin1 Quadrant
INA103KU/1K	SOIC	DW	16	1000	330.0	16.4	10.75	10.7	2.7	12.0	16.0	Q1

TAPE AND REEL BOX DIMENSIONS

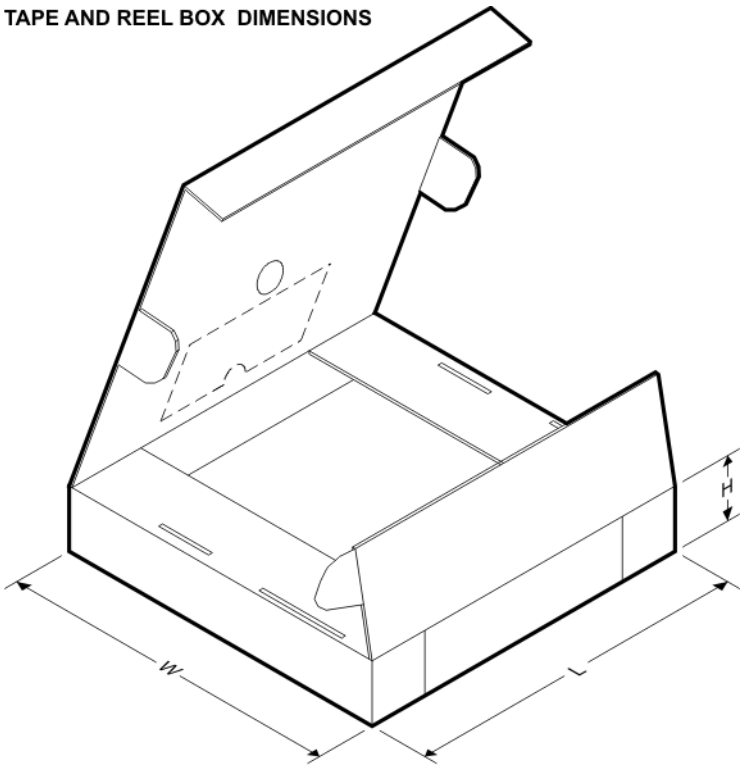

*All dimensions are nominal

Device	Package Type	Package Drawing	Pins	SPQ	Length (mm)	Width (mm)	Height (mm)
INA103KU/1K	SOIC	DW	16	1000	853.0	449.0	35.0

TUBE

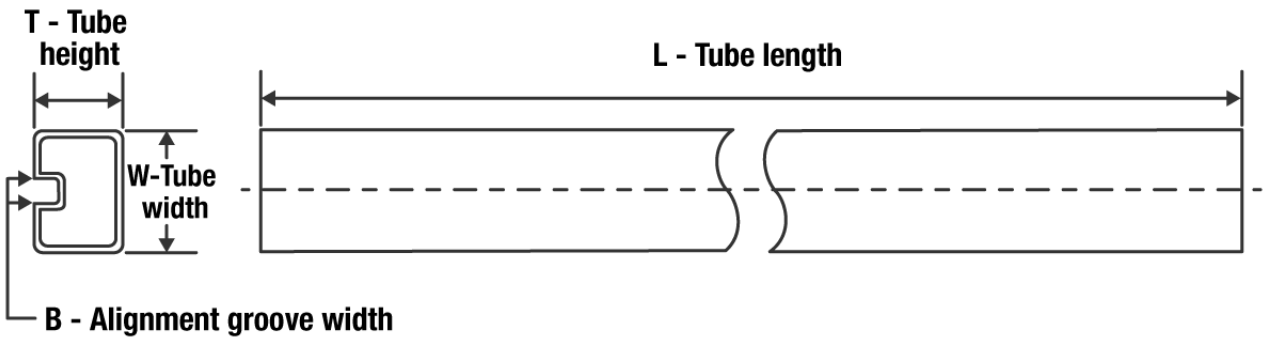

*All dimensions are nominal

Device	Package Name	Package Type	Pins	SPQ	L (mm)	W (mm)	T (µm)	B (mm)
INA103KP	N	PDIP	16	25	506	13.97	11230	4.32
INA103KPG4	N	PDIP	16	25	506	13.97	11230	4.32
INA103KU	DW	SOIC	16	40	507	12.83	5080	6.6

GENERIC PACKAGE VIEW

DW 16

SOIC - 2.65 mm max height

7.5 x 10.3, 1.27 mm pitch

SMALL OUTLINE INTEGRATED CIRCUIT

This image is a representation of the package family, actual package may vary.
Refer to the product data sheet for package details.

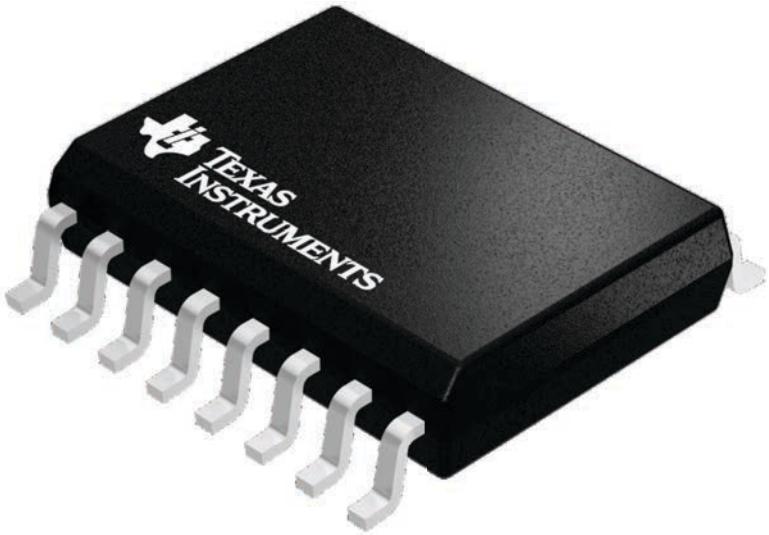

4224780/A

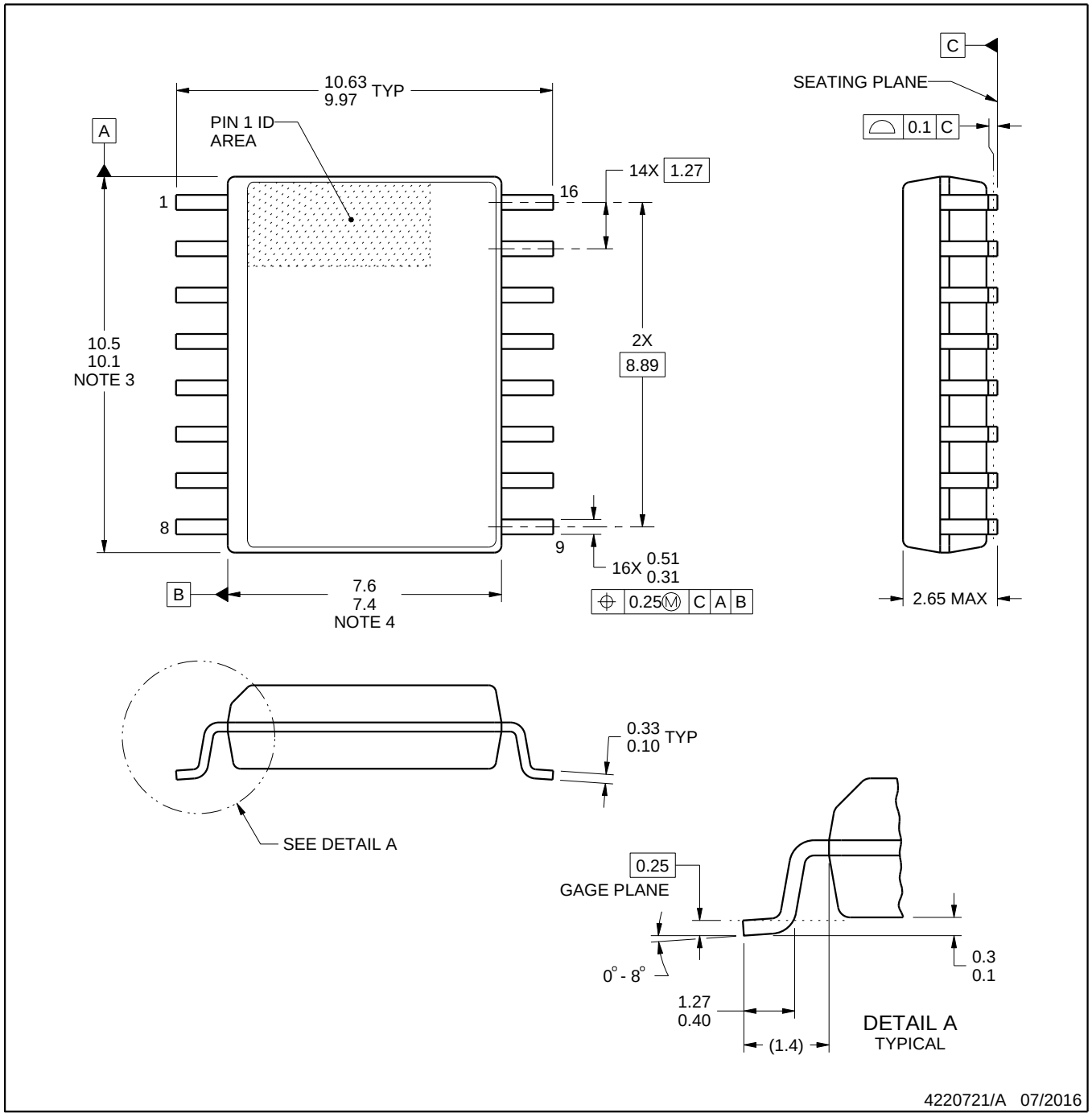

NOTES:

1. All linear dimensions are in millimeters. Dimensions in parenthesis are for reference only. Dimensioning and tolerancing per ASME Y14.5M.
2. This drawing is subject to change without notice.
3. This dimension does not include mold flash, protrusions, or gate burrs. Mold flash, protrusions, or gate burrs shall not exceed 0.15 mm, per side.
4. This dimension does not include interlead flash. Interlead flash shall not exceed 0.25 mm, per side.
5. Reference JEDEC registration MS-013.

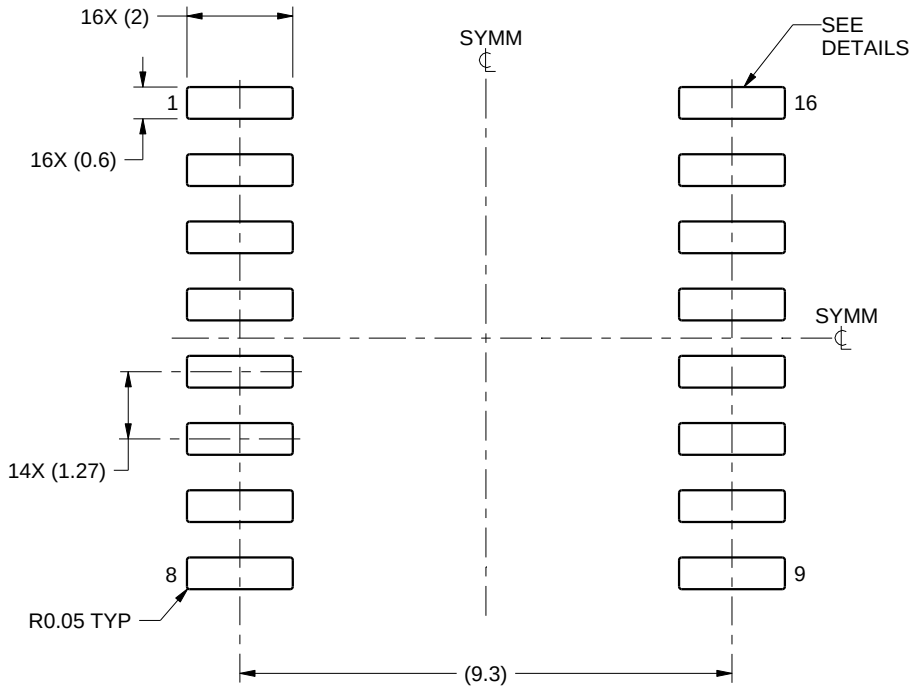

LAND PATTERN EXAMPLE
SCALE:7X

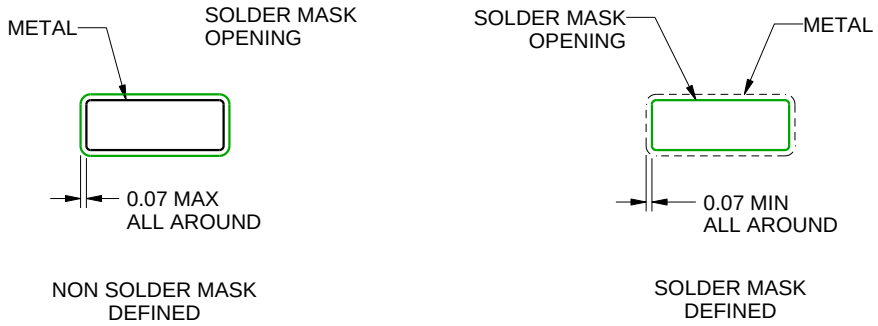

SOLDER MASK DETAILS

4220721/A 07/2016

NOTES: (continued)

6. Publication IPC-7351 may have alternate designs.
7. Solder mask tolerances between and around signal pads can vary based on board fabrication site.

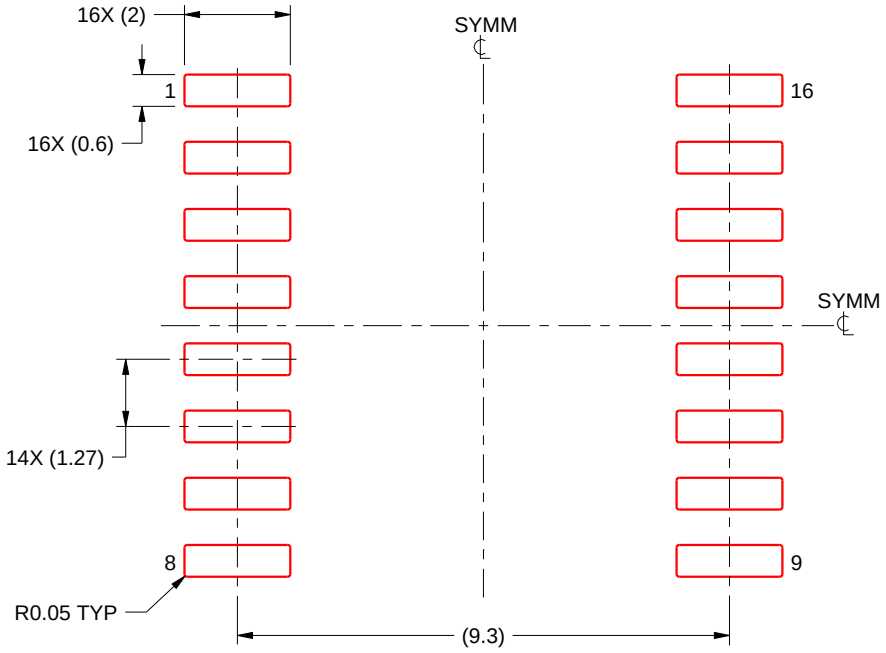

SOLDER PASTE EXAMPLE
BASED ON 0.125 mm THICK STENCIL
SCALE:7X

4220721/A 07/2016

NOTES: (continued)

8. Laser cutting apertures with trapezoidal walls and rounded corners may offer better paste release. IPC-7525 may have alternate design recommendations.
9. Board assembly site may have different recommendations for stencil design.

N (R–PDIP–T**) PLASTIC DUAL–IN–LINE PACKAGE

16 PINS SHOWN

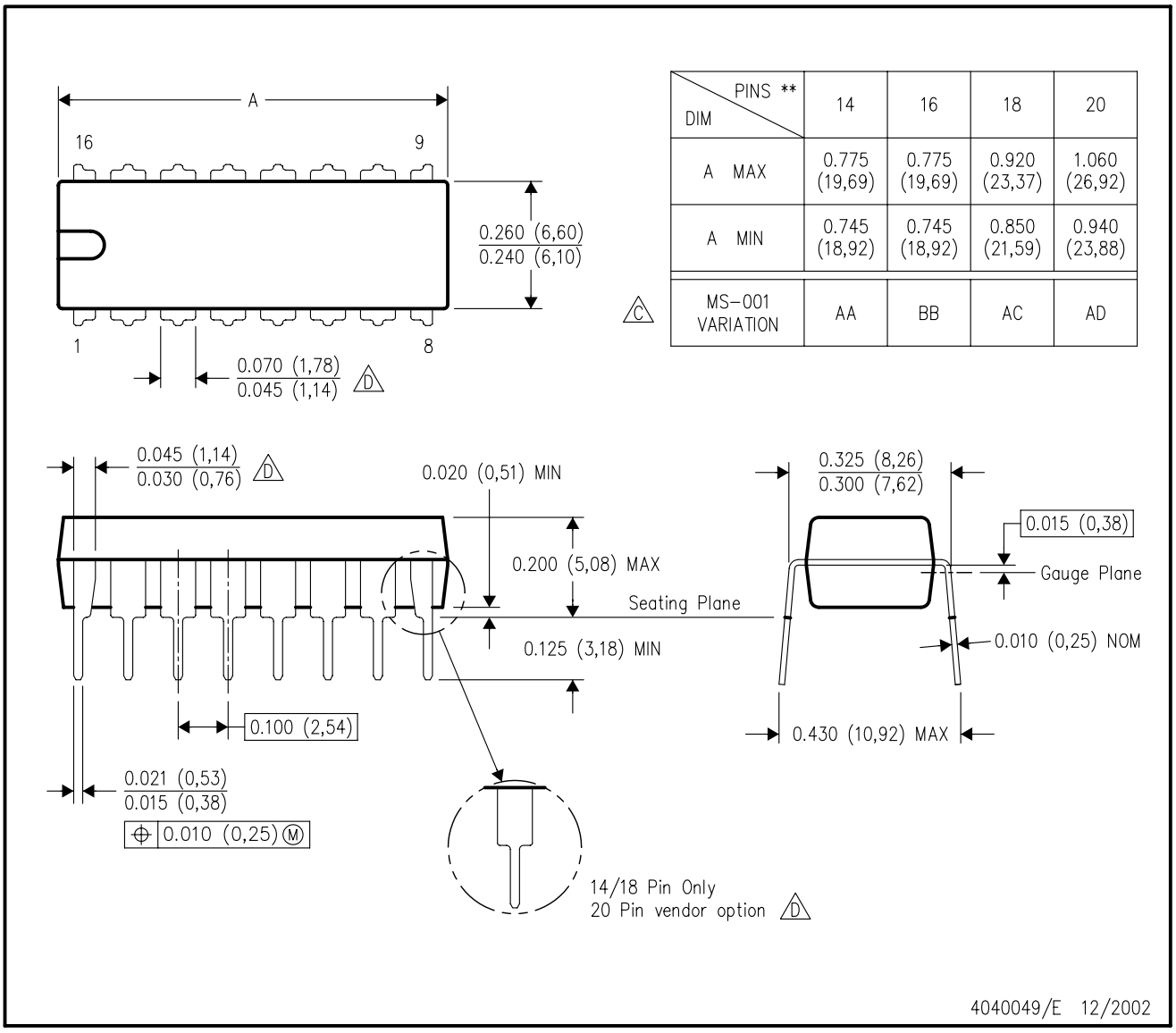

DIM \ PINS **	14	16	18	20
A MAX	0.775 (19,69)	0.775 (19,69)	0.920 (23,37)	1.060 (26,92)
A MIN	0.745 (18,92)	0.745 (18,92)	0.850 (21,59)	0.940 (23,88)
MS–001 VARIATION (C)	AA	BB	AC	AD

NOTES:
A. All linear dimensions are in inches (millimeters).
B. This drawing is subject to change without notice.
C. Falls within JEDEC MS–001, except 18 and 20 pin minimum body length (Dim A).
D. The 20 pin end lead shoulder width is a vendor option, either half or full width.

IMPORTANT NOTICE AND DISCLAIMER

TI PROVIDES TECHNICAL AND RELIABILITY DATA (INCLUDING DATA SHEETS), DESIGN RESOURCES (INCLUDING REFERENCE DESIGNS), APPLICATION OR OTHER DESIGN ADVICE, WEB TOOLS, SAFETY INFORMATION, AND OTHER RESOURCES “AS IS” AND WITH ALL FAULTS, AND DISCLAIMS ALL WARRANTIES, EXPRESS AND IMPLIED, INCLUDING WITHOUT LIMITATION ANY IMPLIED WARRANTIES OF MERCHANTABILITY, FITNESS FOR A PARTICULAR PURPOSE OR NON-INFRINGEMENT OF THIRD PARTY INTELLECTUAL PROPERTY RIGHTS.

These resources are intended for skilled developers designing with TI products. You are solely responsible for (1) selecting the appropriate TI products for your application, (2) designing, validating and testing your application, and (3) ensuring your application meets applicable standards, and any other safety, security, regulatory or other requirements.

These resources are subject to change without notice. TI grants you permission to use these resources only for development of an application that uses the TI products described in the resource. Other reproduction and display of these resources is prohibited. No license is granted to any other TI intellectual property right or to any third party intellectual property right. TI disclaims responsibility for, and you will fully indemnify TI and its representatives against, any claims, damages, costs, losses, and liabilities arising out of your use of these resources.

TI’s products are provided subject to TI’s Terms of Sale or other applicable terms available either on ti.com or provided in conjunction with such TI products. TI’s provision of these resources does not expand or otherwise alter TI’s applicable warranties or warranty disclaimers for TI products.

TI objects to and rejects any additional or different terms you may have proposed.

Mailing Address: Texas Instruments, Post Office Box 655303, Dallas, Texas 75265
Copyright © 2022, Texas Instruments Incorporated