INA293 –4V 至 110V、1.3MHz 超精密电流检测放大器

1 特性

- 宽共模电压：
  - 工作电压：-4 V 至 +110 V
  - 可承受电压：-20 V 至 +120 V
- 出色的共模抑制比 (CMRR)：
  - 160dB 直流 CMRR
  - 85dB 交流 CMRR（50kHz 时）
- 精度：
  - 增益：
    - 增益误差：±0.15%（最大值）
    - 增益漂移：±10ppm/°C（最大值）
  - 失调电压：
    - 失调电压：±15μV（典型值）
    - 温漂：±0.05μV/°C（典型值）
- 可用增益：
  - INA293A1、INA293B1：20V/V
  - INA293A2、INA293B2：50V/V
  - INA293A3、INA293B3：100V/V
  - INA293A4、INA293B4：200V/V
  - INA293A5、INA293B5：500V/V
- 高带宽：1.3 MHz
- 压摆率：2.5 V/μs
- 静态电流：1.5mA

2 应用

- 有源天线系统 mMIMO (AAS)
- 宏远程无线电单元 (RRU)
- 48V 机架式服务器
- 48V 商用网络和服务器电源 (PSU)
- 48V 电池管理系统 (BMS)

3 说明

INA293 是一款超精密电流检测放大器，可在 –4V 至 110V 的宽共模范围内测量分流电阻器上的压降。负共模电压允许器件的工作电压低于接地电压，从而可在半桥应用中精确测量再循环电流。低失调电压、小增益误差和高直流 CMRR 的组合可实现高精度的电流测量。INA293 不仅适用于直流电流测量，还适用于高速应用（例如快速过流保护），此类应用具有 1.3MHz 的高带宽和 85dB 交流 CMRR（50kHz 时）。

INA293 由 2.7V 至 20V 的单电源供电，电源电流为 1.5mA。INA293 提供五个增益选项：20V/V、50V/V、100V/V、200V/V 和 500V/V。这些增益选项可以满足宽动态范围电流检测应用。

INA293 的额定工作温度范围为 -40 °C 至 +125 °C，并且采用节省空间且配备两种引脚型号的 SOT-23 封装。

器件信息(1)

器件型号	封装	封装尺寸（标称值）
INA293	SOT-23 (5)	2.90mm × 1.60mm

(1) 如需了解所有可用封装，请参阅数据表末尾的封装选项附录。

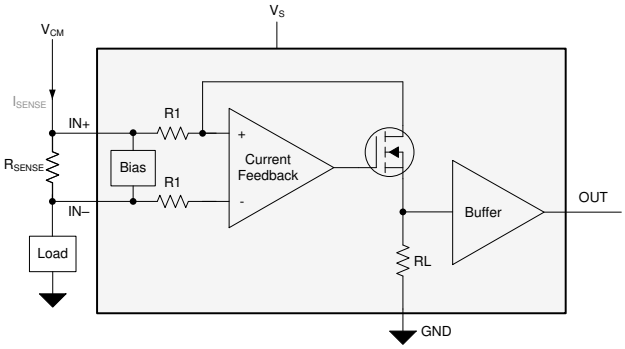

功能方框图

本文档旨在为方便起见，提供有关 TI 产品中文版本的信息，以确认产品的概要。有关适用的官方英文版本的最新信息，请访问 www.ti.com，其内容始终优先。TI 不保证翻译的准确性和有效性。在实际设计之前，请务必参考最新版本的英文版本。

Table of Contents

1 特性.... 1
2 应用.... 1
3 说明.... 1
4 Revision History.... 2
5 Pin Configuration and Functions.... 3
6 Specifications.... 4
6.1 Absolute Maximum Ratings 4
6.2 ESD Ratings 4
6.3 Recommended Operating Conditions 5
6.4 Thermal Information 5
6.5 Electrical Characteristics 5
6.6 Typical Characteristics.... 7
7 Detailed Description.... 13
7.1 Overview.... 13
7.2 Functional Block Diagram.... 13
7.3 Feature Description.... 13
7.4 Device Functional Modes.... 15
8 Application and Implementation.... 16
8.1 Application Information.... 16
8.2 Typical Application.... 18
9 Power Supply Recommendations.... 19
10 Layout.... 20
10.1 Layout Guidelines.... 20
10.2 Layout Example.... 20
11 Device and Documentation Support.... 21
11.1 Documentation Support.... 21
11.2 接收文档更新通知.... 21
11.3 支持资源.... 21
11.4 Trademarks.... 21
11.5 Electrostatic Discharge Caution.... 21
11.6 术语表.... 21
12 Mechanical, Packaging, and Orderable Information.... 21

4 Revision History

Changes from Revision * (December 2019) to Revision A (June 2021) **Page**

- 将数据表标题从“INA293 –4V 至 110V 1MHz 高精度电流检测放大器”更改为 INA293 –4-V 至 110-V、1.3-MHz、高精密电流感测放大器 1
- 更新了整个文档中的表格、图和交叉参考的编号格式.... 1
- 在 *说明* 部分中将“高精度”更改为“超精密”.... 1

Copyright © 2021 Texas Instruments Incorporated

5 Pin Configuration and Functions

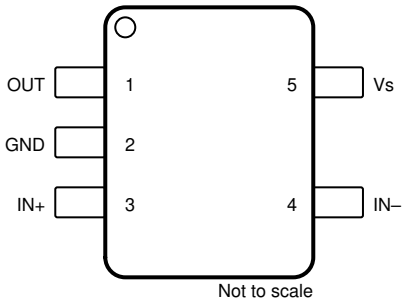

图 5-1. INA293A: DBV Package 5-Pin SOT-23 Top View

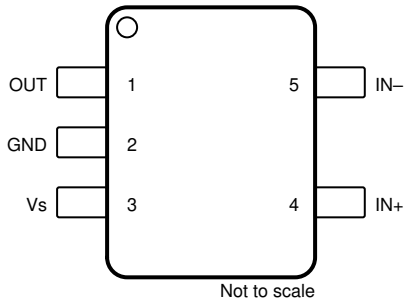

图 5-2. INA293B: DBV Package 5-Pin SOT-23 Top View

表 5-1. Pin Functions

PIN			TYPE	DESCRIPTION
NAME	INA293A	INA293B		
GND	2	2	Ground	Ground
OUT	1	1	Output	Output voltage
Vs	5	3	Power	Power supply
IN+	3	4	Input	Shunt resistor positive sense input
IN–	4	5	Input	Shunt resistor negative sense input

6 Specifications

6.1 Absolute Maximum Ratings

over operating free-air temperature range (unless otherwise noted)[1]

		MIN	MAX	UNIT
Supply Voltage (V_s)		–0.3	22	V
Analog Inputs, V_{IN+}, V_{IN-} [2]	Differential (V_{IN+}) – (V_{IN-}), INA293A5, INA293B5	–6	6	V
	Differential (V_{IN+}) – (V_{IN-}), All others	–12	12	
	Common - mode	–20	120	
Output		GND – 0.3	Vs + 0.3	V
T_A	Operating temperature	–55	150	°C
T_J	Junction temperature		150	°C
T_{stg}	Storage temperature	–65	150	°C

(1) Stresses beyond those listed under *Absolute Maximum Rating* may cause permanent damage to the device. These are stress ratings only, which do not imply functional operation of the device at these or any other conditions beyond those indicated under *Recommended Operating Condition*. Exposure to absolute-maximum-rated conditions for extended periods may affect device reliability.
(2) VIN+ and VIN– are the voltages at the IN+ and IN– pins, respectively.

6.2 ESD Ratings

			VALUE	UNIT
$V_{(ESD)}$	Electrostatic discharge	Human body model (HBM), per ANSI/ESDA/JEDEC JS-001, all pins[1]	±2000	V
		Charged device model (CDM), per JEDEC specification JESD22-C101, all pins[2]	±1000	

(1) JEDEC document JEP155 states that 500-V HBM allows safe manufacturing with a standard ESD control process.
(2) JEDEC document JEP157 states that 250-V CDM allows safe manufacturing with a standard ESD control process.

Copyright © 2021 Texas Instruments Incorporated

6.3 Recommended Operating Conditions

over operating free-air temperature range (unless otherwise noted)

		MIN	NOM	MAX	UNIT
V_{CM}	Common-mode input range	–4	48	110	V
V_S	Operating supply range	2.7	5	20	V
V_{SENSE}	Differential sense input range	0		V_S / G	V
T_A	Ambient temperature	–40		125	°C

6.4 Thermal Information

THERMAL METRIC[1]		INA293 DBV (SOT-23) 5 PINS	UNIT
$R_{\theta JA}$	Junction-to-ambient thermal resistance	184.7	°C/W
$R_{\theta JC(top)}$	Junction-to-case (top) thermal resistance	105.6	°C/W
$R_{\theta JB}$	Junction-to-board thermal resistance	47.2	°C/W
Ψ_{JT}	Junction-to-top characterization parameter	21.5	°C/W
Ψ_{JB}	Junction-to-board characterization parameter	46.9	°C/W
$R_{\theta JC(bot)}$	Junction-to-case (bottom) thermal resistance	N/A	°C/W

(1) For more information about traditional and new thermal metrics, see the Semiconductor and IC Package Thermal Metrics application report.

6.5 Electrical Characteristics

at T_A = 25 °C, V_S = 5 V, V_{SENSE} = V_{IN+} - V_{IN-} = 0.5 V / Gain, V_{CM} = V_{IN-} = 48 V (unless otherwise noted)

PARAMETER		TEST CONDITIONS	MIN	TYP	MAX	UNIT
INPUT						
V_{CM}	Common-mode input range[1]	T_A = -40°C to +125°C	–4		110	V
CMRR	Common-mode rejection ratio, input referred	-4 V ≤ V_{CM} ≤ 110 V, T_A = -40°C to +125°C	140	160		dB
		f = 50 kHz		85		dB
V_{os}	Offset voltage, input referred	INA293x1		±30	±150	μV
		INA293x2		±15	±80	
		INA293x3		±10	±50	
		INA293x4		±5	±30	
		INA293x5		±2	±20	
dV_{os}/dT	Offset voltage drift	T_A = -40℃ to +125℃, INA293x1, INA293x2, INA293x3		±0.05	±0.5	μV/℃
		T_A = -40℃ to +125℃, INA293x4, INA293x5		±0.025	±0.25	
PSRR	Power supply rejection ratio, input referred	INA293x1, 2.7 V ≤ V_S ≤ 20 V, T_A = -40°C to +125°C		±1	±8	μV/V
		INA293x2, INA293x3, 2.7 V ≤ V_S ≤ 20 V, T_A = -40°C to +125°C		±0.3	±3	
		INA293x4, INA293x5, 2.7 V ≤ V_S ≤ 20 V, T_A = -40°C to +125°C		±0.1	±1	
I_B	Input bias current	I_{B+}, V_{SENSE} = 0 V	10	20	30	uA
		I_{B-}, V_{SENSE} = 0 V	10	20	30	uA

6.5 Electrical Characteristics (continued)

at T_A = 25 °C, V_S = 5 V, V_{SENSE} = V_{IN+} - V_{IN-} = 0.5 V / Gain, V_{CM} = V_{IN-} = 48 V (unless otherwise noted)

PARAMETER		TEST CONDITIONS	MIN	TYP	MAX	UNIT
OUTPUT						
G	Gain	INA293x1		20		V/V
		INA293x2		50		V/V
		INA293x3		100		V/V
		INA293x4		200		V/V
		INA293x5		500		V/V
G_{ERR}	Gain error	GND + 50 mV ≤ V_{OUT} ≤ V_S – 200 mV		±0.02	±0.15	%
		T_A = -40°C to +125°C		±1	±10	ppm/°C
NL_{ERR}	Nonlinearity error			0.01		%
	Maximum capacitive load	No sustained oscillations, no isolation resistor		500		pF
VOLTAGE OUTPUT						
	Swing to Vs (Power supply rail)	R_{LOAD} = 10 kΩ, T_A = -40°C to +125°C		Vs – 0.07	Vs – 0.15	V
	Swing to ground	R_{LOAD} = 10 kΩ, V_{SENSE} = 0 V, T_A = -40°C to +125°C		0.005	0.02	V
FREQUENCY RESPONSE						
BW	Bandwidth	INA293x1, C_{LOAD} = 5 pF, V_{SENSE} = 200 mV		1300		kHz
		INA293x2, C_{LOAD} = 5 pF, V_{SENSE} = 80 mV		1300		
		INA293x3, C_{LOAD} = 5 pF, V_{SENSE} = 40 mV		1000		
		INA293x4, C_{LOAD} = 5 pF, V_{SENSE} = 20 mV		900		
		INA293x5, C_{LOAD} = 5 pF, V_{SENSE} = 8 mV		900		
SR	Slew rate	Rising edge		2.5		V/µs
	Settling time	V_{OUT} = 4 V ± 0.1 V step, Output settles to 0.5%		10		µs
		V_{OUT} = 4 V ± 0.1 V step, Output settles to 1%		5		
		V_{OUT} = 4 V ± 0.1 V step, Output settles to 5%		1		
NOISE						
Ven	Voltage noise density			50		nV/√Hz
POWER SUPPLY						
Vs	Supply voltage	T_A = –40°C to +125°C	2.7		20	V
I_Q	Quiescent current			1.5	2	mA
		T_A = -40°C to +125°C			2.25	mA

(1) Common-mode voltage at both V_{IN+} and V_{IN-} must not exceed the specified common-mode input range.

Copyright © 2021 Texas Instruments Incorporated

6.6 Typical Characteristics

All specifications at T_A = 25 °C, V_S = 5 V, V_{SENSE} = V_{IN+} – V_{IN-} = 0.5 V / Gain, V_{CM} = $V_{IN–}$ = 48 V, unless otherwise noted.

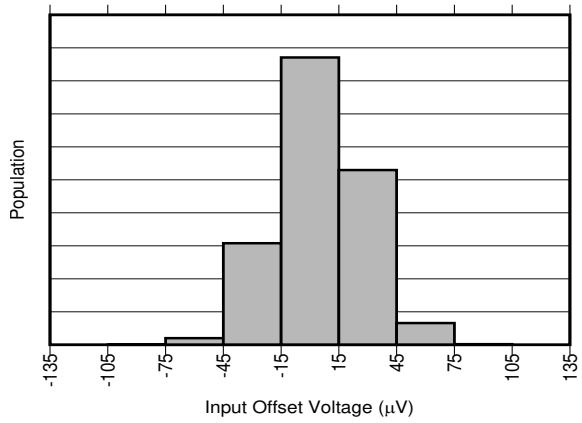

图 6-1. INA293x1 Input Offset Production Distribution

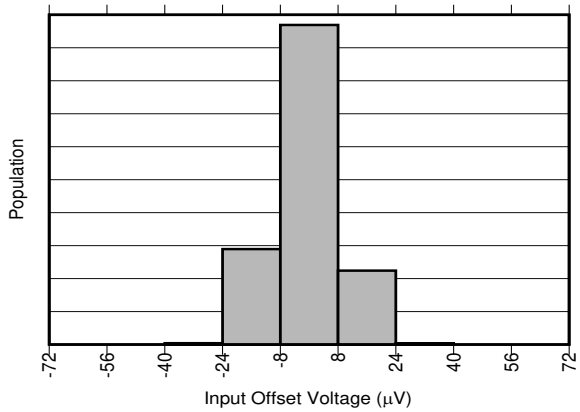

图 6-2. INA293x2 Input Offset Production Distribution

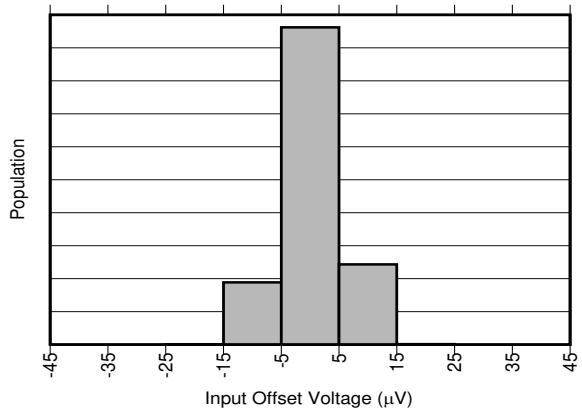

图 6-3. INA293x3 Input Offset Production Distribution

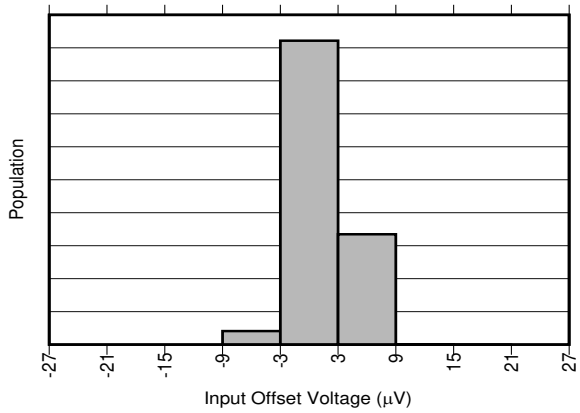

图 6-4. INA293x4 Input Offset Production Distribution

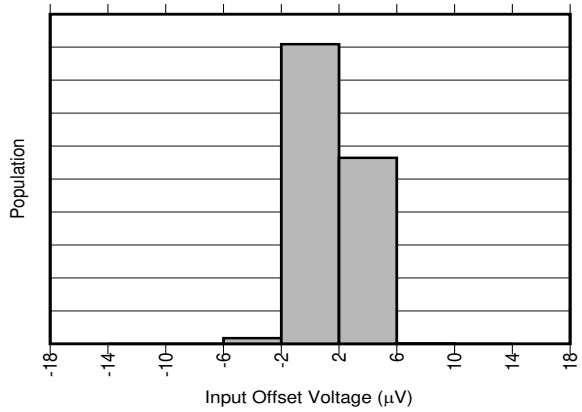

图 6-5. INA293x5 Input Offset Production Distribution

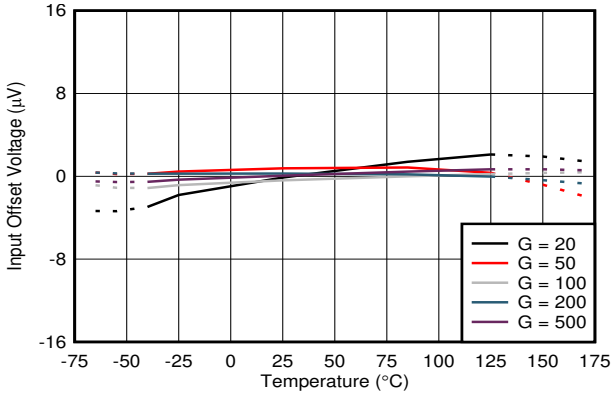

图 6-6. Input Offset Voltage vs Temperature

6.6 Typical Characteristics (continued)

All specifications at T_A = 25 °C, V_S = 5 V, V_{SENSE} = V_{IN+} – V_{IN-} = 0.5 V / Gain, V_{CM} = V_{IN-} = 48 V, unless otherwise noted.

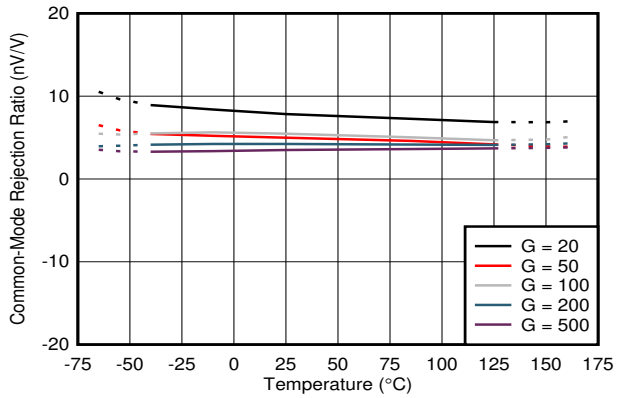

图 6-7. Common-Mode Rejection Ratio vs Temperature

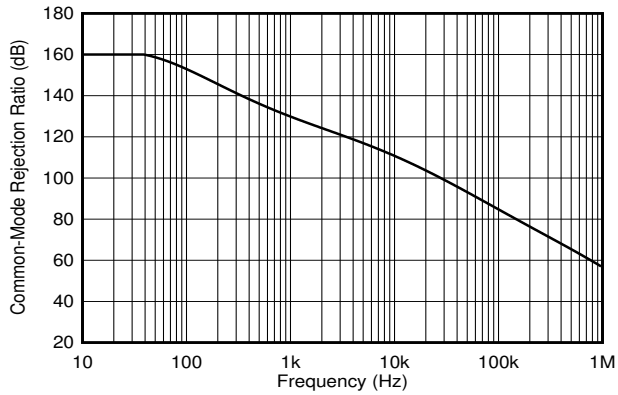

图 6-8. Common-Mode Rejection Ratio vs Frequency

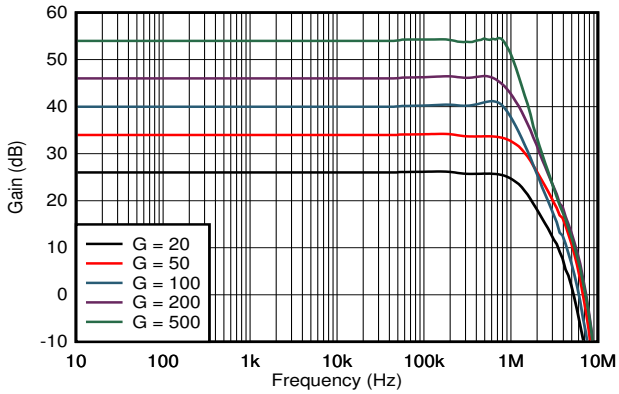

图 6-9. Gain vs Frequency

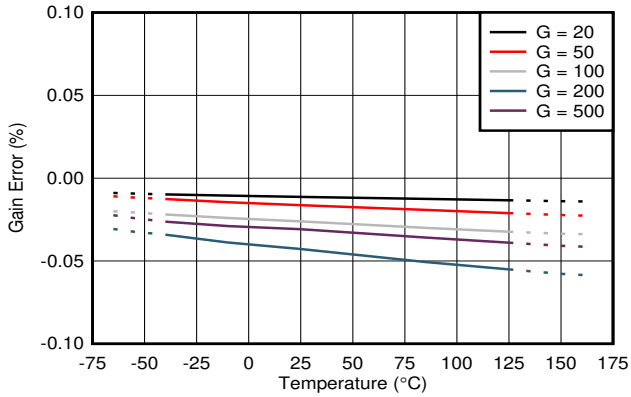

图 6-10. Gain Error vs Temperature

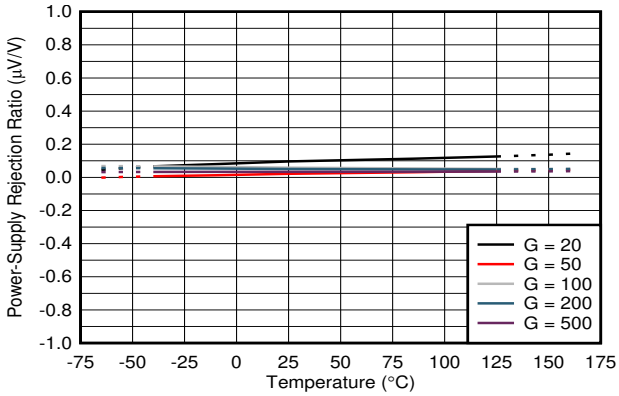

图 6-11. Power-Supply Rejection Ratio vs Temperature

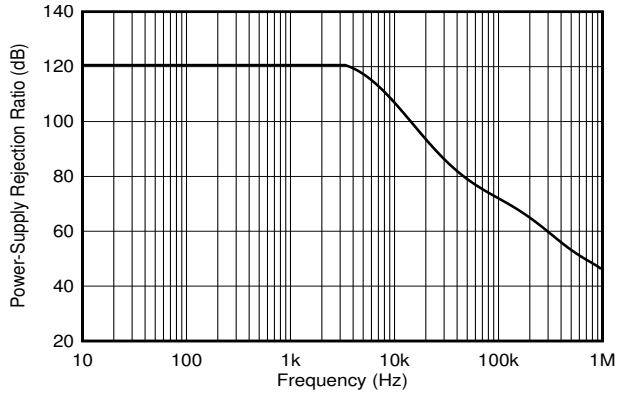

图 6-12. Power-Supply Rejection Ratio vs Frequency

Copyright © 2021 Texas Instruments Incorporated

6.6 Typical Characteristics (continued)

All specifications at T_A = 25 °C, V_S = 5 V, V_{SENSE} = V_{IN+} – V_{IN-} = 0.5 V / Gain, V_{CM} = $V_{IN–}$ = 48 V, unless otherwise noted.

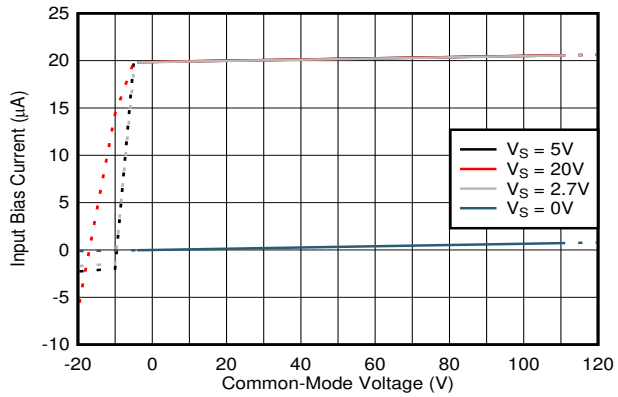

V_{SENSE} = 0 V

图 6-13. Input Bias Current vs Common-Mode Voltage

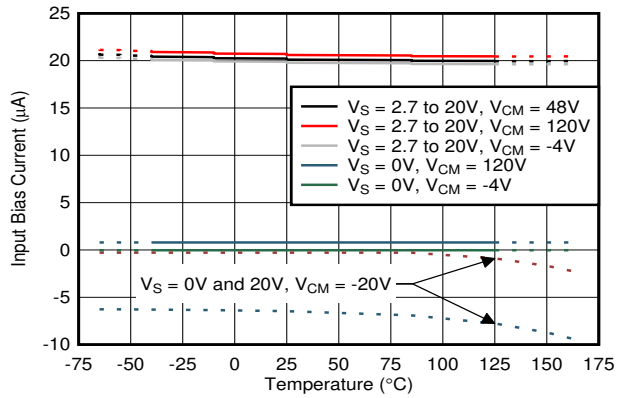

图 6-14. Input Bias Current vs Temperature

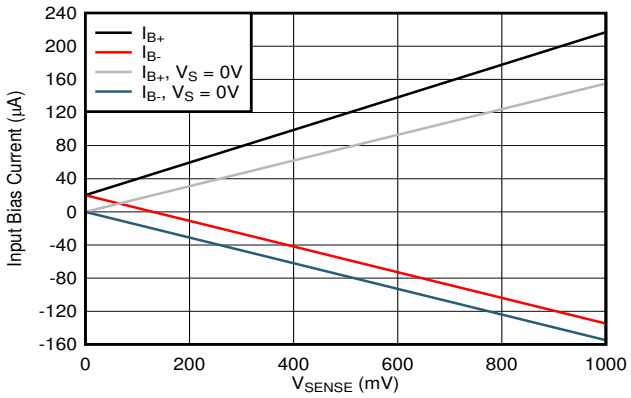

图 6-15. INA293x1 Input Bias Current vs V_{SENSE}

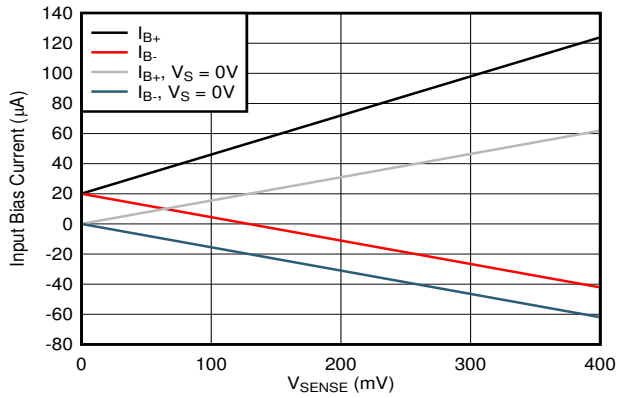

图 6-16. INA293x2, INA293x3 Input Bias Current vs V_{SENSE}

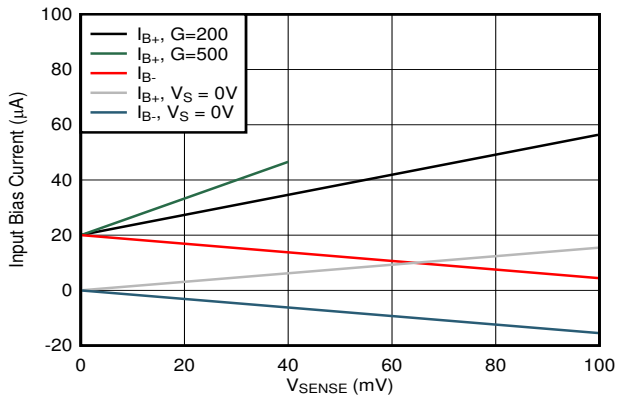

图 6-17. INA293x4, INA293x5 Input Bias Current vs V_{SENSE}

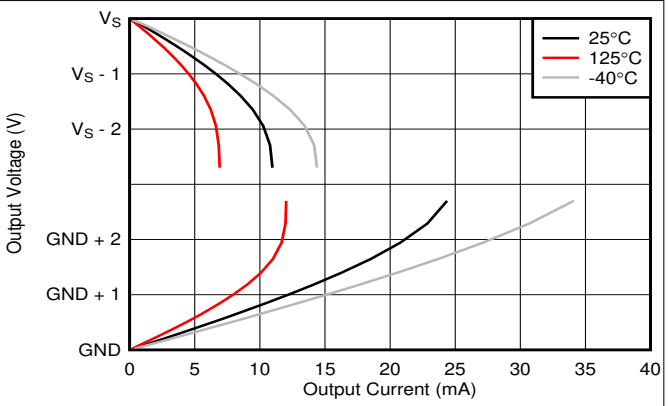

V_S = 2.7 V

图 6-18. Output Voltage vs Output Current

6.6 Typical Characteristics (continued)

All specifications at T_A = 25 °C, V_S = 5 V, V_{SENSE} = V_{IN+} – V_{IN-} = 0.5 V / Gain, V_{CM} = $V_{IN–}$ = 48 V, unless otherwise noted.

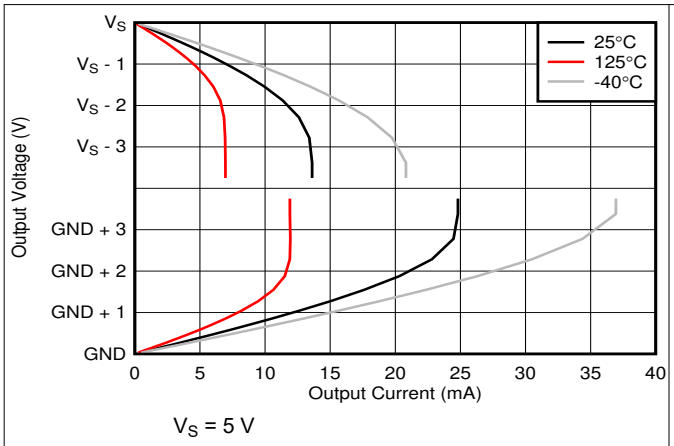

图 6-19. Output Voltage vs Output Current

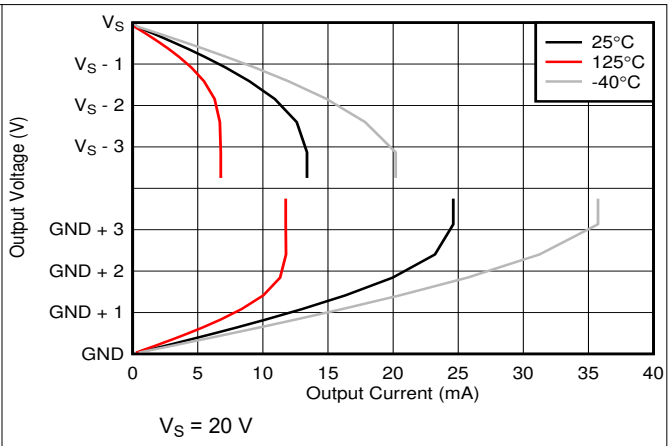

图 6-20. Output Voltage vs Output Current

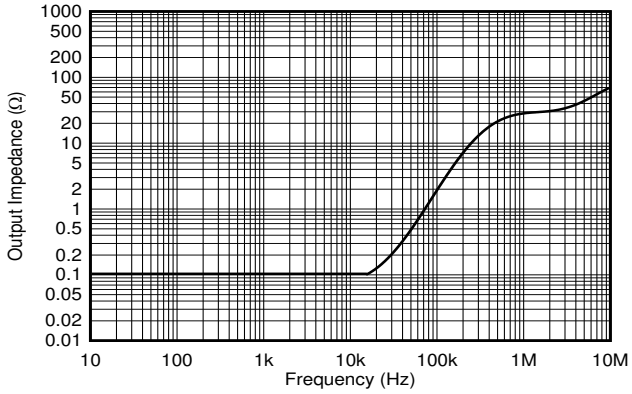

图 6-21. Output Impedance vs Frequency

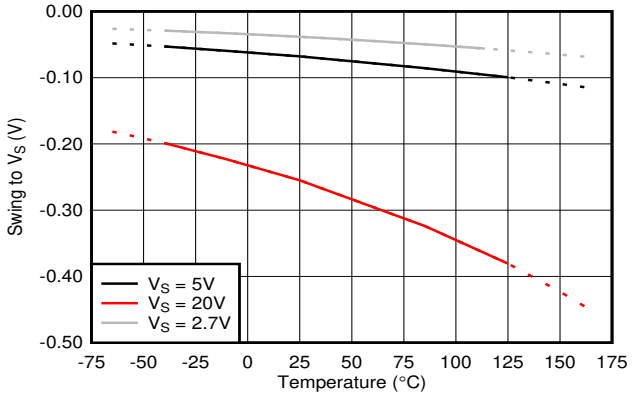

图 6-22. Swing to Supply vs Temperature

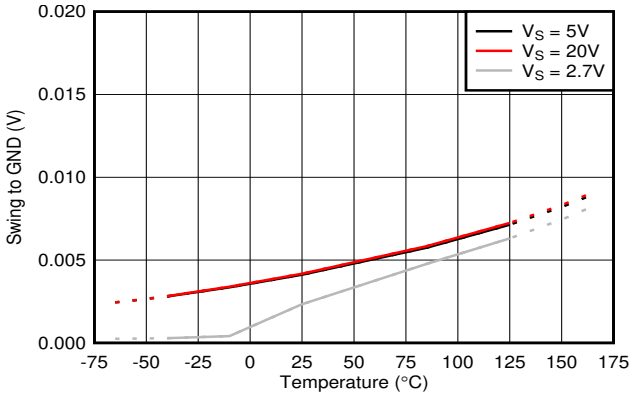

图 6-23. Swing to GND vs Temperature

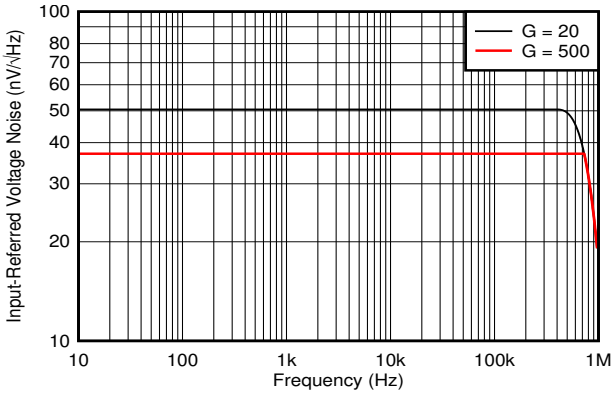

图 6-24. Input Referred Noise vs Frequency

Copyright © 2021 Texas Instruments Incorporated

6.6 Typical Characteristics (continued)

All specifications at T_A = 25 °C, V_S = 5 V, V_{SENSE} = V_{IN+} – V_{IN-} = 0.5 V / Gain, V_{CM} = $V_{IN–}$ = 48 V, unless otherwise noted.

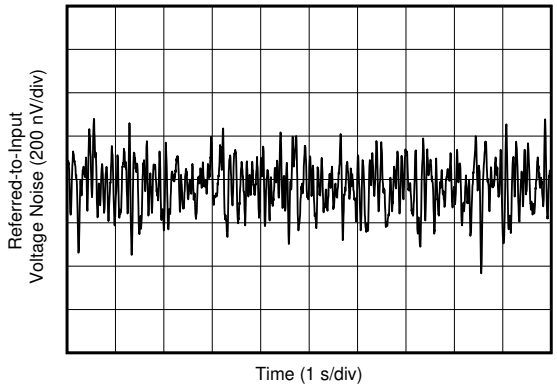

图 6-25. Input Referred Noise

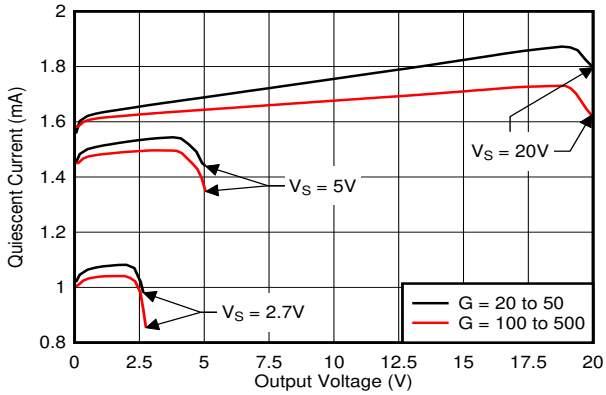

图 6-26. Quiescent Current vs Output Voltage

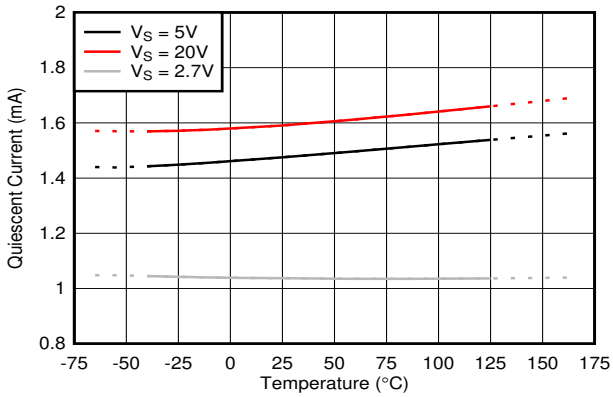

图 6-27. Quiescent Current vs Temperature

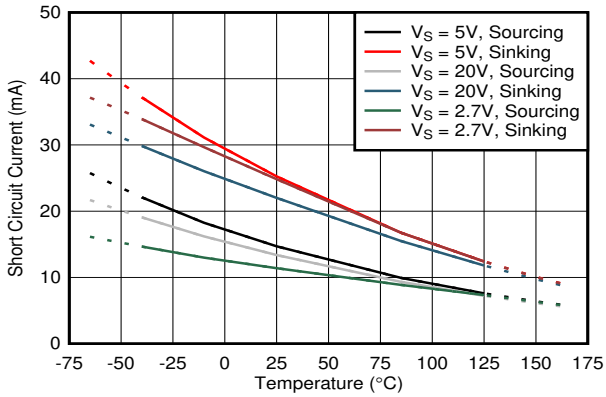

图 6-28. Short-Circuit Current vs Temperature

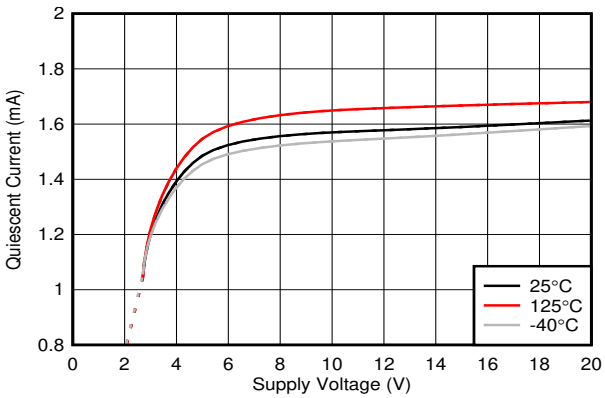

图 6-29. Quiescent Current vs Supply Voltage

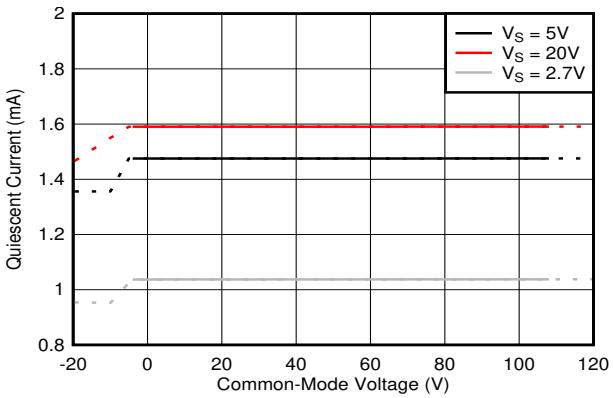

图 6-30. Quiescent Current vs Common-Mode Voltage

6.6 Typical Characteristics (continued)

All specifications at T_A = 25 °C, V_S = 5 V, V_{SENSE} = V_{IN+} – V_{IN-} = 0.5 V / Gain, V_{CM} = $V_{IN–}$ = 48 V, unless otherwise noted.

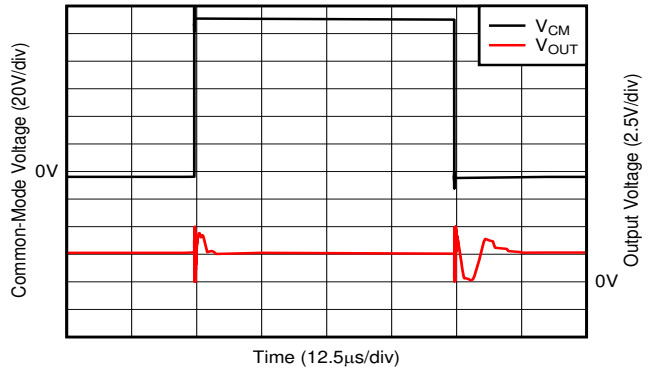

图 6-31. Common-Mode Voltage Fast Transient Pulse

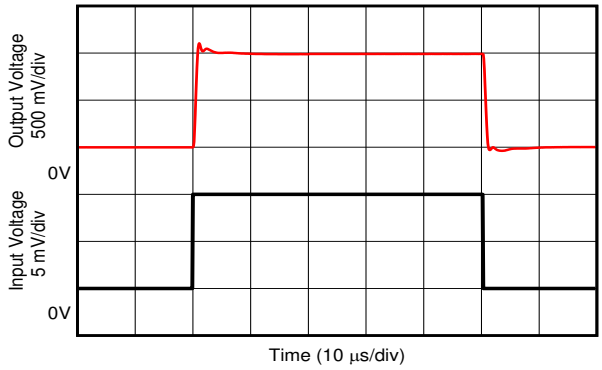

图 6-32. INA293x3 Step Response

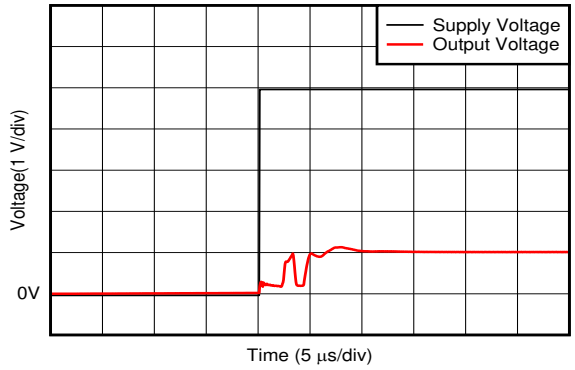

图 6-33. Start-Up Response

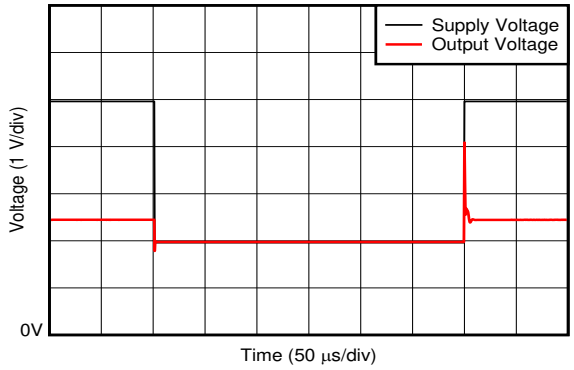

图 6-34. Supply Transient Response

Copyright © 2021 Texas Instruments Incorporated

7 Detailed Description

7.1 Overview

The INA293 is a high- or low-side current-sense amplifier that offers a wide common-mode range, precision zero-drift topology, excellent common-mode rejection ratio (CMRR), high bandwidth and fast slew rate. Different gain versions are available to optimize the output dynamic range based on the application. The INA293 is designed using a transconductance architecture with a current-feedback amplifier that enables low bias currents of 20 µA with a common-mode voltage of 110 V.

7.2 Functional Block Diagram

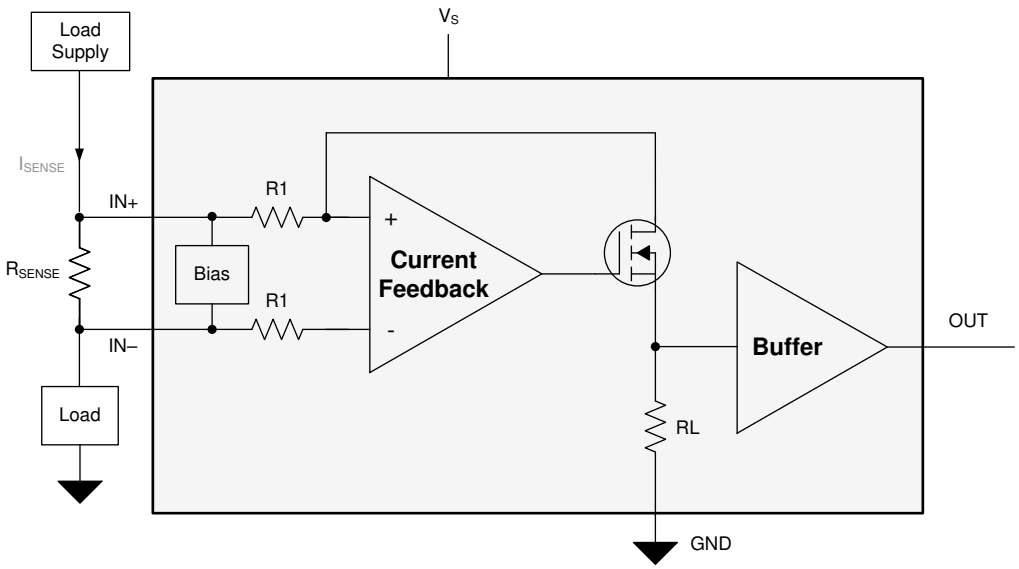

7.3 Feature Description

7.3.1 Amplifier Input Common-Mode Signal

The INA293 supports large input common-mode voltages from –4 V to +110 V. Because of the internal topology, the common-mode range is not restricted by the power-supply voltage (V_S). This allows for the INA293 to be used for both low and high side current-sensing applications.

7.3.1.1 Input-Signal Bandwidth

The INA293 –3-dB bandwidth is gain dependent, with several gain options of 20 V/V, 50 V/V, 100 V/V, 200 V/V, and 500 V/V. The unique multistage design enables the amplifier to achieve high bandwidth at all gains. This high bandwidth provides the throughput and fast response that is required for the rapid detection and processing of overcurrent events.

The bandwidth of the device also depends on the applied V_{SENSE} voltage. 图 7-1 shows the bandwidth performance profile of the device over frequency as output voltage increases for each gain variation. As shown in 图 7-1, the device exhibits the highest bandwidth with higher V_{SENSE} voltages, and the bandwidth is higher with lower device gain options. Individual requirements determine the acceptable limits of error for high frequency current-sensing applications. Testing and evaluation in the end application or circuit is required to determine the acceptance criteria, and to validate that the performance levels meet the system specifications.

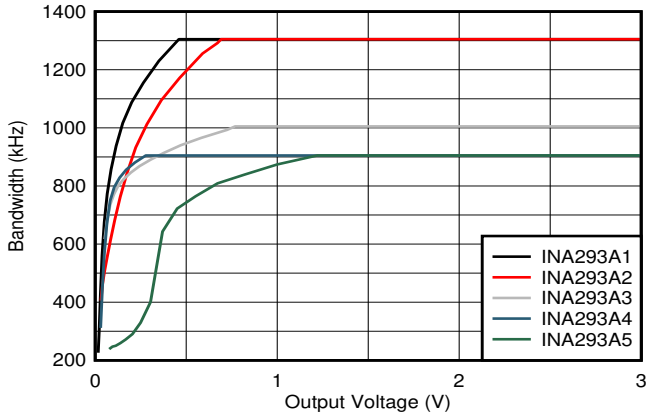

图 7-1. Bandwidth vs Output Voltage

7.3.1.2 Low Input Bias Current

The INA293 inputs draw a 20-µA (typical) bias current at a common-mode voltage as high as 110 V, which enables precision current sensing on applications that require lower current leakage.

7.3.1.3 Low V_{SENSE} Operation

The INA293 operates with high performance across the entire valid V_{SENSE} range. The zero-drift input architecture of the INA293 provides the low offset voltage and low offset drift needed to measure low V_{SENSE} levels accurately across the wide operating temperature of –40 °C to +125 °C. Low V_{SENSE} operation is particularly beneficial when using low ohmic shunts for low current measurements, as power losses across the shunt are significantly reduced.

7.3.1.4 Wide Fixed Gain Output

The INA293 gain error is < 0.15% at room temperature, with a maximum drift of 10 ppm/°C over the full temperature range of –40°C to +125°C. The INA293 is available in multiple gain options of 20 V/V, 50 V/V, 100 V/V, 200 V/V, and 500 V/V, which the system designer should select based on their desired signal-to-noise ratio and other system requirements.

The INA293 closed-loop gain is set by a precision, low drift internal resistor network. The ratio of these resistors are excellently matched, while the absolute values may vary significantly. Adding additional resistance around the INA293 to change the effective gain is not recommended, however, because of this variation. The typical values of the gain resistors are described in 表 7-1.

表 7-1. Fixed Gain Resistor

GAIN	R1	RL
20 (V/V)	25 kΩ	500 kΩ
50 (V/V)	10 kΩ	500 kΩ
100 (V/V)	10 kΩ	1000 kΩ
200 (V/V)	5 kΩ	1000 kΩ
500 (V/V)	2 kΩ	1000 kΩ

7.3.1.5 Wide Supply Range

The INA293 operates with a wide supply range from 2.7 V to 20 V. The output stage supports a wide output range while INA293x1 (gain of 20 V/V) at a supply voltage of 20 V allows a maximum acceptable differential input of 1 V. When paired with the small input offset voltage of the INA293, systems with very wide dynamic range of current measurement can be supported.

Copyright © 2021 Texas Instruments Incorporated

7.4 Device Functional Modes

7.4.1 Unidirectional Operation

The INA293 measures the differential voltage developed by current flowing through a resistor, commonly referred to as a current-sensing resistor or a current-shunt resistor. The INA293 operates in unidirectional mode only, meaning it only senses current sourced from a power supply to a system load as shown in 图 7-2.

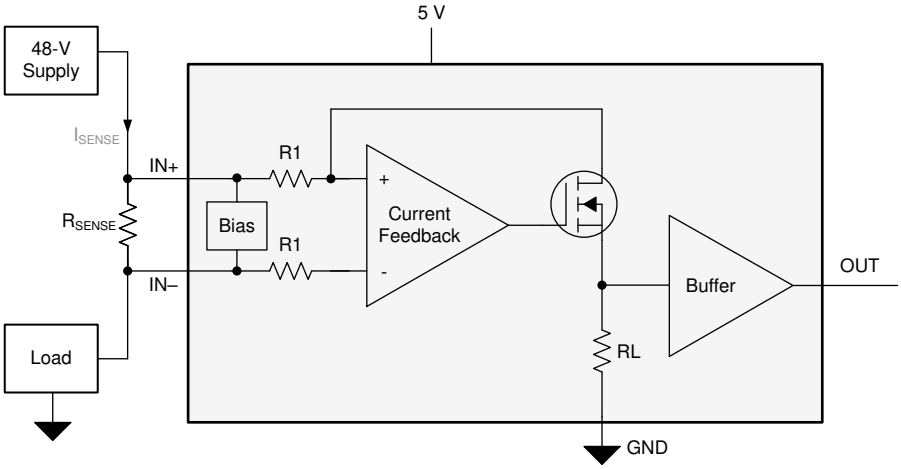

图 7-2. Unidirectional Application

The linear range of the output stage is limited to how close the output voltage can approach ground under zero-input conditions. The zero current output voltage of the INA293 is very small, with a maximum of GND + 20 mV. Make sure to apply a differential input voltage of (20 mV / Gain) or greater to keep the INA293 output in the linear region of operation.

7.4.2 High Signal Throughput

With a bandwidth of 1.3 MHz at a gain of 20 V/V and a slew rate of 2.5 V/µs, the INA293 is specifically designed for detecting and protecting applications from fast inrush currents. As shown in 表 7-2, the INA293 responds in less than 2 µs for a system measuring a 75-A threshold on a 2-mΩ shunt.

表 7-2. Response Time

PARAMETER		EQUATION	INA293 AT V_S = 5 V
G	Gain		20 V/V
I_{MAX}	Maximum current		100 A
$I_{Threshold}$	Threshold current		75 A
R_{SENSE}	Current sense resistor value		2 mΩ
V_{OUT_MAX}	Output voltage at maximum current	$V_{OUT_MAX} = I_{MAX} \times R_{SENSE} \times G$	4 V
V_{OUT_THR}	Output voltage at threshold current	$V_{OUT_THR} = I_{THR} \times R_{SENSE} \times G$	3 V
SR	Slew rate		2.5 V/µs
	Output response time	$T_{response} = V_{OUT_THR} / SR$	< 2 µs

8 Application and Implementation

Note

以下应用部分中的信息不属于 TI 器件规格的范围，TI 不担保其准确性和完整性。TI 的客 户应负责确定器件是否适用于其应用。客户应验证并测试其设计，以确保系统功能。

8.1 Application Information

The INA293 amplifies the voltage developed across a current-sensing resistor as current flows through the resistor to the load. The wide input common-mode voltage range and high common-mode rejection of the INA293 make it usable over a wide range of voltage rails while still maintaining an accurate current measurement.

8.1.1 R_{SENSE} and Device Gain Selection

The accuracy of any current-sense amplifier is maximized by choosing the current-sense resistor to be as large as possible. A large sense resistor maximizes the differential input signal for a given amount of current flow and reduces the error contribution of the offset voltage. However, there are practical limits as to how large the current-sense resistor can be in a given application because of the resistor size and maximum allowable power dissipation. 方程式 1 gives the maximum value for the current-sense resistor for a given power dissipation budget:

$$R_{SENSE} < \frac{PD_{MAX}}{I_{MAX}^2} \tag{1}$$

where:

- PD_{MAX} is the maximum allowable power dissipation in R_{SENSE}.
- I_{MAX} is the maximum current that will flow through R_{SENSE}.

An additional limitation on the size of the current-sense resistor and device gain is due to the power-supply voltage, V_S, and device swing-to-rail limitations. To make sure that the current-sense signal is properly passed to the output, both positive and negative output swing limitations must be examined. 方程式 2 provides the maximum values of R_{SENSE} and GAIN to keep the device from exceeding the positive swing limitation.

$$I_{MAX} \times R_{SENSE} \times GAIN < V_{SP} \tag{2}$$

where:

- I_{MAX} is the maximum current that will flow through R_{SENSE}.
- GAIN is the gain of the current-sense amplifier.
- V_{SP} is the positive output swing as specified in the data sheet.

To avoid positive output swing limitations when selecting the value of R_{SENSE}, there is always a trade-off between the value of the sense resistor and the gain of the device under consideration. If the sense resistor selected for the maximum power dissipation is too large, then it is possible to select a lower-gain device in order to avoid positive swing limitations.

The negative swing limitation places a limit on how small the sense resistor value can be for a given application. 方程式 3 provides the limit on the minimum value of the sense resistor.

$$I_{MIN} \times R_{SENSE} \times GAIN > V_{SN} \tag{3}$$

where:

- I_{MIN} is the minimum current that will flow through R_{SENSE}.
- GAIN is the gain of the current-sense amplifier.
- V_{SN} is the negative output swing of the device.

Copyright © 2021 Texas Instruments Incorporated

表 8-1 shows an example of the different results obtained from using five different gain versions of the INA293. From the table data, the highest gain device allows a smaller current-shunt resistor and decreased power dissipation in the element.

表 8-1. R_{SENSE} Selection and Power Dissipation(1)

PARAMETER		EQUATION	RESULTS AT V_S = 5 V				
			A1, B1 DEVICES	A2, B2 DEVICES	A3, B3 DEVICES	A4, B4 DEVICES	A5, B5 DEVICES
G	Gain		20 V/V	50 V/V	100 V/V	200 V/V	500 V/V
V_{DIFF}	Ideal differential input voltage	$V_{DIFF} = V_{OUT} / G$	250 mV	100 mV	50 mV	25 mV	10 mV
R_{SENSE}	Current sense resistor value	$R_{SENSE} = V_{DIFF} / I_{MAX}$	25 mΩ	10 mΩ	5 mΩ	2.5 mΩ	1 mΩ
P_{SENSE}	Current-sense resistor power dissipation	$R_{SENSE} \times I_{MAX}2$	2.5 W	1 W	0.5W	0.25 W	0.1 W

(1) Design example with 10-A full-scale current with maximum output voltage set to 5 V.

8.1.2 Input Filtering

Note

Input filters are not required for accurate measurements using the INA293, and use of filters in this location is not recommended. If filter components are used on the input of the amplifier, follow the guidelines in this section to minimize the effects on performance.

Based strictly on user design requirements, external filtering of the current signal may be desired. The initial location that can be considered for the filter is at the output of the current sense amplifier. Although placing the filter at the output satisfies the filtering requirements, this location changes the low output impedance measured by any circuitry connected to the output voltage pin. The other location for filter placement is at the current sense amplifier input pins. This location satisfies the filtering requirement also, however the components must be carefully selected to minimally impact device performance. 图 8-1 shows a filter placed at the input pins.

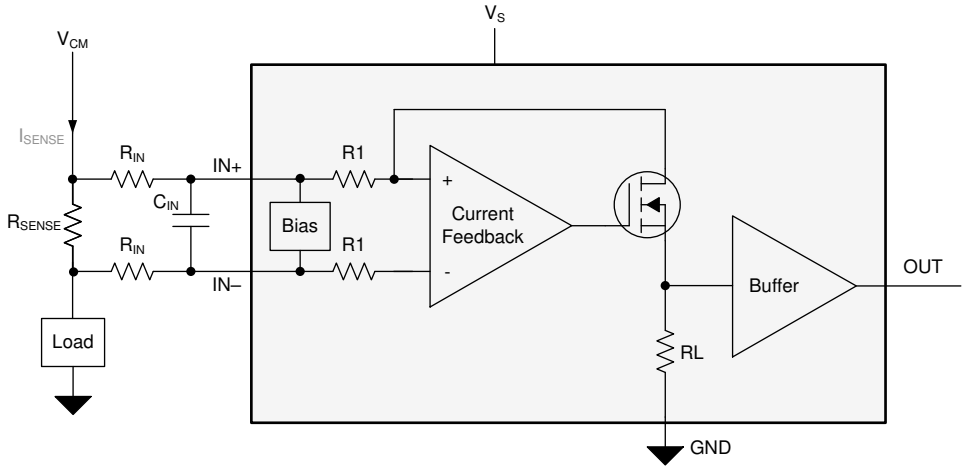

图 8-1. Filter at Input Pins

External series resistance provides a source of additional measurement error, so keep the value of these series resistors to 10 Ω or less to reduce loss of accuracy. The internal bias network shown in 图 8-1 creates a mismatch in input bias currents (see 图 6-15, 图 6-16 and 图 6-17) when a differential voltage is applied between the input pins. If additional external series filter resistors are added to the circuit, a mismatch is created in the voltage drop across the filter resistors. This voltage is a differential error voltage in the shunt resistor voltage. In addition to the absolute resistor value, mismatch resulting from resistor tolerance can significantly impact the error because this value is calculated based on the actual measured resistance.

The measurement error expected from the additional external filter resistors can be calculated using 方程式 4, where the gain error factor is calculated using 方程式 5.

$$\text{Gain Error (\%)} = 100 - (100 \times \text{Gain Error Factor}) \quad (4)$$

The gain error factor, shown in 方程式 4, can be calculated to determine the gain error introduced by the additional external series resistance. 方程式 4 calculates the deviation of the shunt voltage, resulting from the attenuation and imbalance created by the added external filter resistance. 表 8-2 provides the gain error factor and gain error for several resistor values.

$$\text{Gain Error Factor} = \frac{4000 \times R_1}{(4000 \times R_1 + 4000 \times R_S + R_S \times R_1)} \quad (5)$$

Where:

- R_S is the external filter resistance value
- R_1 is the INA293 input resistance value specified in 表 7-1

表 8-2. Example Gain Error Factor and Gain Error for 10-Ω External Filter Input Resistors

DEVICE (GAIN)	GAIN ERROR FACTOR	GAIN ERROR (%)
INA293x1 (20)	0.997108386	-0.289161432
INA293x2 (50)	0.996512207	-0.348779273
INA293x3 (100)	0.996512207	-0.348779273
INA293x4 (200)	0.995520159	-0.447984072
INA293x5 (500)	0.992555831	-0.744416873

8.2 Typical Application

The INA293 is a unidirectional, current-sense amplifier capable of measuring currents through a resistive shunt with shunt common-mode voltages from –4 V to +110 V.

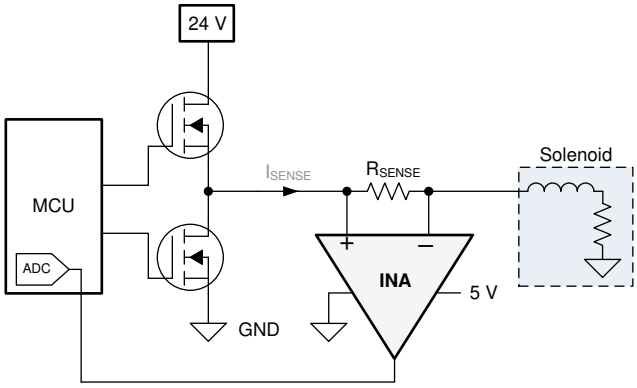

图 8-2. Current Sensing in a Solenoid Application

8.2.1 Design Requirements

In this example application, the common-mode voltage ranges from 0 V to 24 V. The maximum sense current is 1.5 A, and a 5-V supply is available for the INA293. Following the design guidelines from the *R_{SENSE} and Device Gain Selection* section, a R_{SENSE} of 50 mΩ and a gain of 50 V/V are selected to provide good output dynamic range. 表 8-3 lists the design setup for this application.

表 8-3. Design Parameters

DESIGN PARAMETERS	EXAMPLE VALUE
Power supply voltage	5 V
Common-mode voltage range	0 V to 24 V
Maximum sense current	1.5 A
R_{SENSE} resistor	50 mΩ

Copyright © 2021 Texas Instruments Incorporated

表 8-3. Design Parameters (continued)

DESIGN PARAMETERS	EXAMPLE VALUE
Gain option	50 V/V

8.2.2 Detailed Design Procedure

The INA293 is designed to measure current in a typical solenoid application. The INA293 measures current across the 50-mΩ shunt that is placed at the output of the half-bridge. The INA293 measures the differential voltage across the shunt resistor, and the signal is internally amplified with a gain of 50 V/V. The output of the INA293 is connected to the analog-to-digital converter (ADC) of an MCU to digitize the current measurements.

Solenoid loads are highly inductive and are often prone to failure. Solenoids are often used for position control, precise fluid control, and fluid regulation. Measuring real-time current on the solenoid continuously can indicate premature failure of the solenoid which can lead to a faulty control loop in the system. Measuring high-side current also indicates if there are any ground faults on the solenoid or the FETs that can be damaged in an application. The INA293, with high bandwidth and slew rate, can be used to detect fast overcurrent conditions to prevent the solenoid damage from short-to-ground faults.

8.2.2.1 Overload Recovery With Negative V_{SENSE}

The INA293 is a unidirectional current sense amplifier that is meant to operate with a positive differential input voltage (V_{SENSE}). If negative V_{SENSE} is applied, the device is placed in an overload condition and requires time to recover once V_{SENSE} returns positive. The required overload recovery time increases with more negative V_{SENSE}.

8.2.3 Application Curve

图 8-3 shows the output response of a solenoid.

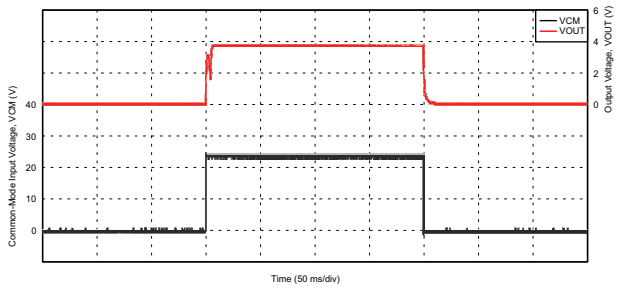

图 8-3. Solenoid Control Current Response

9 Power Supply Recommendations

The INA293 power supply can be 5 V, whereas the input common-mode voltage can vary between –4 V to 110 V. The output voltage range of the OUT pin, however, is limited by the voltage on the power-supply pin.

10 Layout

10.1 Layout Guidelines

Attention to good layout practices is always recommended.

- Connect the input pins to the sensing resistor using a Kelvin or 4-wire connection. This connection technique makes sure that only the current-sensing resistor impedance is detected between the input pins. Poor routing of the current-sensing resistor commonly results in additional resistance present between the input pins. Given the very low ohmic value of the current resistor, any additional high-current carrying impedance can cause significant measurement errors.
- Place the power-supply bypass capacitor as close as possible to the device power supply and ground pins. The recommended value of this bypass capacitor is 0.1 µF. Additional decoupling capacitance can be added to compensate for noisy or high-impedance power supplies.

10.2 Layout Example

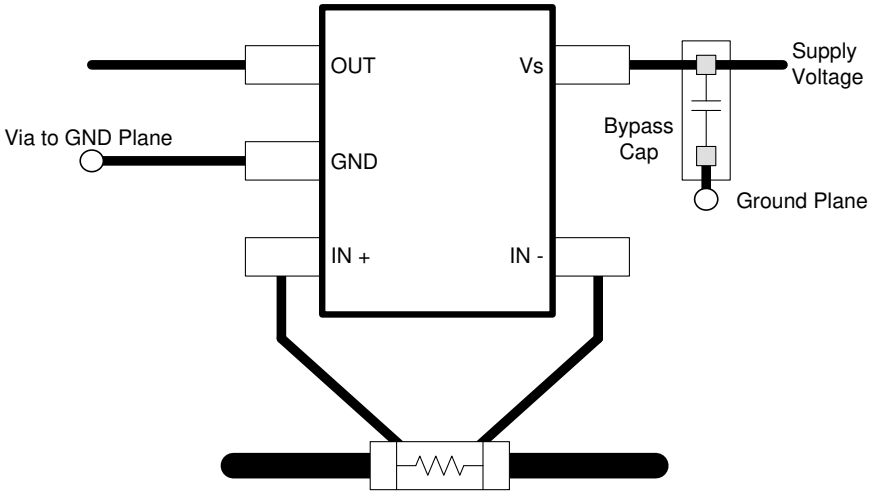

图 10-1. INA293A Recommended Layout

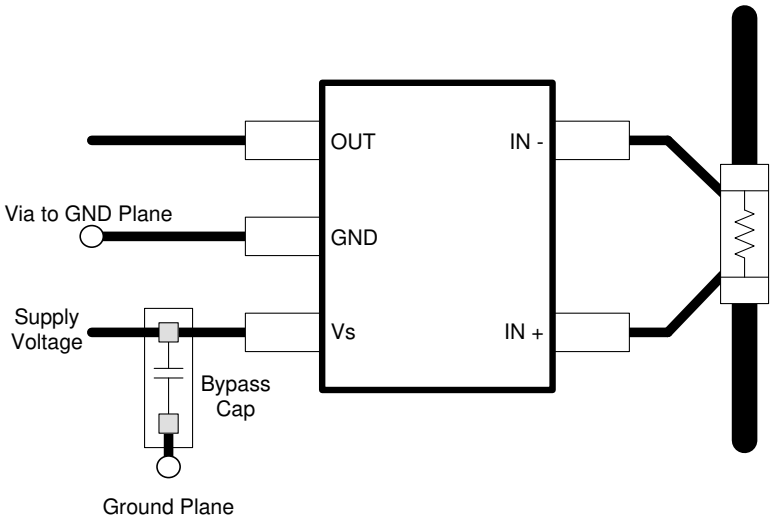

图 10-2. INA293B Recommended Layout

Copyright © 2021 Texas Instruments Incorporated

11 Device and Documentation Support

11.1 Documentation Support

11.1.1 Related Documentation

For related documentation see the following: Texas Instruments, *INA293EVM* user's guide

11.2 接收文档更新通知

要接收文档更新通知，请导航至 ti.com 上的器件产品文件夹。点击*订阅更新* 进行注册，即可每周接收产品信息更改摘要。有关更改的详细信息，请查看任何已修订文档中包含的修订历史记录。

11.3 支持资源

TI E2E™ 支持论坛是工程师的重要参考资料，可直接从专家获得快速、经过验证的解答和设计帮助。搜索现有解答或提出自己的问题可获得所需的快速设计帮助。

链接的内容由各个贡献者“按原样”提供。这些内容并不构成 TI 技术规范，并且不一定反映 TI 的观点；请参阅 TI 的《使用条款》。

11.4 Trademarks

TI E2E™ is a trademark of Texas Instruments.
所有商标均为其各自所有者的财产。

11.5 Electrostatic Discharge Caution

This integrated circuit can be damaged by ESD. Texas Instruments recommends that all integrated circuits be handled with appropriate precautions. Failure to observe proper handling and installation procedures can cause damage.

ESD damage can range from subtle performance degradation to complete device failure. Precision integrated circuits may be more susceptible to damage because very small parametric changes could cause the device not to meet its published specifications.

11.6 术语表

TI 术语表　　本术语表列出并解释了术语、首字母缩略词和定义。

12 Mechanical, Packaging, and Orderable Information

The following pages include mechanical, packaging, and orderable information. This information is the most current data available for the designated devices. This data is subject to change without notice and revision of this document. For browser-based versions of this data sheet, refer to the left-hand navigation.

重要声明和免责声明

TI 提供技术和可靠性数据（包括数据表）、设计资源（包括参考设计）、应用或其他设计建议、网络工具、安全信息和其他资源，不保证没有瑕疵且不做出任何明示或暗示的担保，包括但不限于对适销性、某特定用途方面的适用性或不侵犯任何第三方知识产权的暗示担保。

这些资源可供使用 TI 产品进行设计的熟练开发人员使用。您将自行承担以下全部责任：(1) 针对您的应用选择合适的 TI 产品，(2) 设计、验证并测试您的应用，(3) 确保您的应用满足相应标准以及任何其他安全、安保或其他要求。这些资源如有变更，恕不另行通知。TI 授权您仅可将这些资源用于研发本资源所述的 TI 产品的应用。严禁对这些资源进行其他复制或展示。您无权使用任何其他 TI 知识产权或任何第三方知识产权。您应全额赔偿因在这些资源的使用中对 TI 及其代表造成的任何索赔、损害、成本、损失和债务，TI 对此概不负责。

TI 提供的产品受 TI 的销售条款 (https:www.ti.com/legal/termsofsale.html) 或 ti.com 上其他适用条款/TI 产品随附的其他适用条款的约束。TI 提供这些资源并不会扩展或以其他方式更改 TI 针对 TI 产品发布的适用的担保或担保免责声明。

邮寄地址：Texas Instruments, Post Office Box 655303, Dallas, Texas 75265
Copyright © 2021，德州仪器 (TI) 公司

PACKAGING INFORMATION

Orderable Device	Status (1)	Package Type	Package Drawing	Pins	Package Qty	Eco Plan (2)	Lead finish/ Ball material (6)	MSL Peak Temp (3)	Op Temp (°C)	Device Marking (4/5)	Samples
INA293A1IDBVR	ACTIVE	SOT-23	DBV	5	3000	RoHS & Green	NIPDAU	Level-1-260C-UNLIM	-40 to 125	1XWC	Samples
INA293A1IDBVT	ACTIVE	SOT-23	DBV	5	250	RoHS & Green	NIPDAU	Level-1-260C-UNLIM	-40 to 125	1XWC	Samples
INA293A2IDBVR	ACTIVE	SOT-23	DBV	5	3000	RoHS & Green	NIPDAU	Level-1-260C-UNLIM	-40 to 125	1XXC	Samples
INA293A2IDBVT	ACTIVE	SOT-23	DBV	5	250	RoHS & Green	NIPDAU	Level-1-260C-UNLIM	-40 to 125	1XXC	Samples
INA293A3IDBVR	ACTIVE	SOT-23	DBV	5	3000	RoHS & Green	NIPDAU	Level-1-260C-UNLIM	-40 to 125	1XZC	Samples
INA293A3IDBVT	ACTIVE	SOT-23	DBV	5	250	RoHS & Green	NIPDAU	Level-1-260C-UNLIM	-40 to 125	1XZC	Samples
INA293A4IDBVR	ACTIVE	SOT-23	DBV	5	3000	RoHS & Green	NIPDAU	Level-1-260C-UNLIM	-40 to 125	1Z1C	Samples
INA293A4IDBVT	ACTIVE	SOT-23	DBV	5	250	RoHS & Green	NIPDAU	Level-1-260C-UNLIM	-40 to 125	1Z1C	Samples
INA293A5IDBVR	ACTIVE	SOT-23	DBV	5	3000	RoHS & Green	NIPDAU	Level-1-260C-UNLIM	-40 to 125	1Z7C	Samples
INA293A5IDBVT	ACTIVE	SOT-23	DBV	5	250	RoHS & Green	NIPDAU	Level-1-260C-UNLIM	-40 to 125	1Z7C	Samples
INA293B1IDBVR	ACTIVE	SOT-23	DBV	5	3000	RoHS & Green	NIPDAU	Level-1-260C-UNLIM	-40 to 125	1Z2C	Samples
INA293B1IDBVT	ACTIVE	SOT-23	DBV	5	250	RoHS & Green	NIPDAU	Level-1-260C-UNLIM	-40 to 125	1Z2C	Samples
INA293B2IDBVR	ACTIVE	SOT-23	DBV	5	3000	RoHS & Green	NIPDAU	Level-1-260C-UNLIM	-40 to 125	1Z3C	Samples
INA293B2IDBVT	ACTIVE	SOT-23	DBV	5	250	RoHS & Green	NIPDAU	Level-1-260C-UNLIM	-40 to 125	1Z3C	Samples
INA293B3IDBVR	ACTIVE	SOT-23	DBV	5	3000	RoHS & Green	NIPDAU	Level-1-260C-UNLIM	-40 to 125	1Z4C	Samples
INA293B3IDBVT	ACTIVE	SOT-23	DBV	5	250	RoHS & Green	NIPDAU	Level-1-260C-UNLIM	-40 to 125	1Z4C	Samples
INA293B4IDBVR	ACTIVE	SOT-23	DBV	5	3000	RoHS & Green	NIPDAU	Level-1-260C-UNLIM	-40 to 125	1Z5C	Samples
INA293B4IDBVT	ACTIVE	SOT-23	DBV	5	250	RoHS & Green	NIPDAU	Level-1-260C-UNLIM	-40 to 125	1Z5C	Samples
INA293B5IDBVR	ACTIVE	SOT-23	DBV	5	3000	RoHS & Green	NIPDAU	Level-1-260C-UNLIM	-40 to 125	1Z6C	Samples
INA293B5IDBVT	ACTIVE	SOT-23	DBV	5	250	RoHS & Green	NIPDAU	Level-1-260C-UNLIM	-40 to 125	1Z6C	Samples

(1) The marketing status values are defined as follows:
ACTIVE: Product device recommended for new designs.
LIFEBUY: TI has announced that the device will be discontinued, and a lifetime-buy period is in effect.
NRND: Not recommended for new designs. Device is in production to support existing customers, but TI does not recommend using this part in a new design.
PREVIEW: Device has been announced but is not in production. Samples may or may not be available.
OBSOLETE: TI has discontinued the production of the device.

(2) **RoHS:** TI defines "RoHS" to mean semiconductor products that are compliant with the current EU RoHS requirements for all 10 RoHS substances, including the requirement that RoHS substance do not exceed 0.1% by weight in homogeneous materials. Where designed to be soldered at high temperatures, "RoHS" products are suitable for use in specified lead-free processes. TI may reference these types of products as "Pb-Free".
RoHS Exempt: TI defines "RoHS Exempt" to mean products that contain lead but are compliant with EU RoHS pursuant to a specific EU RoHS exemption.
Green: TI defines "Green" to mean the content of Chlorine (Cl) and Bromine (Br) based flame retardants meet JS709B low halogen requirements of <=1000ppm threshold. Antimony trioxide based flame retardants must also meet the <=1000ppm threshold requirement.

(3) MSL, Peak Temp. - The Moisture Sensitivity Level rating according to the JEDEC industry standard classifications, and peak solder temperature.

(4) There may be additional marking, which relates to the logo, the lot trace code information, or the environmental category on the device.

(5) Multiple Device Markings will be inside parentheses. Only one Device Marking contained in parentheses and separated by a "~" will appear on a device. If a line is indented then it is a continuation of the previous line and the two combined represent the entire Device Marking for that device.

(6) Lead finish/Ball material - Orderable Devices may have multiple material finish options. Finish options are separated by a vertical ruled line. Lead finish/Ball material values may wrap to two lines if the finish value exceeds the maximum column width.

Important Information and Disclaimer: The information provided on this page represents TI's knowledge and belief as of the date that it is provided. TI bases its knowledge and belief on information provided by third parties, and makes no representation or warranty as to the accuracy of such information. Efforts are underway to better integrate information from third parties. TI has taken and continues to take reasonable steps to provide representative and accurate information but may not have conducted destructive testing or chemical analysis on incoming materials and chemicals. TI and TI suppliers consider certain information to be proprietary, and thus CAS numbers and other limited information may not be available for release.

In no event shall TI's liability arising out of such information exceed the total purchase price of the TI part(s) at issue in this document sold by TI to Customer on an annual basis.

OTHER QUALIFIED VERSIONS OF INA293 :

- Automotive : INA293-Q1

NOTE: Qualified Version Definitions:

- Automotive - Q100 devices qualified for high-reliability automotive applications targeting zero defects

TAPE AND REEL INFORMATION

REEL DIMENSIONS

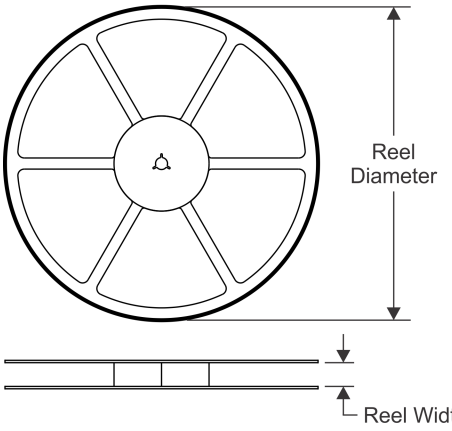

TAPE DIMENSIONS

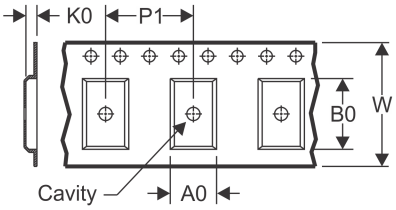

A0	Dimension designed to accommodate the component width
B0	Dimension designed to accommodate the component length
K0	Dimension designed to accommodate the component thickness
W	Overall width of the carrier tape
P1	Pitch between successive cavity centers

QUADRANT ASSIGNMENTS FOR PIN 1 ORIENTATION IN TAPE

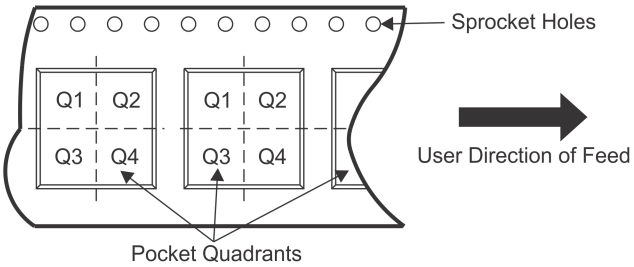

*All dimensions are nominal

Device	Package Type	Package Drawing	Pins	SPQ	Reel Diameter (mm)	Reel Width W1 (mm)	A0 (mm)	B0 (mm)	K0 (mm)	P1 (mm)	W (mm)	Pin1 Quadrant
INA293A1IDBVR	SOT-23	DBV	5	3000	180.0	8.4	3.23	3.17	1.37	4.0	8.0	Q3
INA293A1IDBVT	SOT-23	DBV	5	250	180.0	8.4	3.23	3.17	1.37	4.0	8.0	Q3
INA293A2IDBVR	SOT-23	DBV	5	3000	180.0	8.4	3.23	3.17	1.37	4.0	8.0	Q3
INA293A2IDBVT	SOT-23	DBV	5	250	180.0	8.4	3.23	3.17	1.37	4.0	8.0	Q3
INA293A3IDBVR	SOT-23	DBV	5	3000	180.0	8.4	3.23	3.17	1.37	4.0	8.0	Q3
INA293A3IDBVT	SOT-23	DBV	5	250	180.0	8.4	3.23	3.17	1.37	4.0	8.0	Q3
INA293A4IDBVR	SOT-23	DBV	5	3000	180.0	8.4	3.23	3.17	1.37	4.0	8.0	Q3
INA293A4IDBVT	SOT-23	DBV	5	250	180.0	8.4	3.23	3.17	1.37	4.0	8.0	Q3
INA293A5IDBVR	SOT-23	DBV	5	3000	180.0	8.4	3.23	3.17	1.37	4.0	8.0	Q3
INA293A5IDBVT	SOT-23	DBV	5	250	180.0	8.4	3.23	3.17	1.37	4.0	8.0	Q3
INA293B1IDBVR	SOT-23	DBV	5	3000	180.0	8.4	3.23	3.17	1.37	4.0	8.0	Q3
INA293B1IDBVT	SOT-23	DBV	5	250	180.0	8.4	3.23	3.17	1.37	4.0	8.0	Q3
INA293B2IDBVR	SOT-23	DBV	5	3000	180.0	8.4	3.23	3.17	1.37	4.0	8.0	Q3
INA293B2IDBVT	SOT-23	DBV	5	250	180.0	8.4	3.23	3.17	1.37	4.0	8.0	Q3
INA293B3IDBVR	SOT-23	DBV	5	3000	180.0	8.4	3.23	3.17	1.37	4.0	8.0	Q3
INA293B3IDBVT	SOT-23	DBV	5	250	180.0	8.4	3.23	3.17	1.37	4.0	8.0	Q3
INA293B4IDBVR	SOT-23	DBV	5	3000	180.0	8.4	3.23	3.17	1.37	4.0	8.0	Q3
INA293B4IDBVT	SOT-23	DBV	5	250	180.0	8.4	3.23	3.17	1.37	4.0	8.0	Q3

Device	Package Type	Package Drawing	Pins	SPQ	Reel Diameter (mm)	Reel Width W1 (mm)	A0 (mm)	B0 (mm)	K0 (mm)	P1 (mm)	W (mm)	Pin1 Quadrant
INA293B5IDBVR	SOT-23	DBV	5	3000	180.0	8.4	3.23	3.17	1.37	4.0	8.0	Q3
INA293B5IDBVT	SOT-23	DBV	5	250	180.0	8.4	3.23	3.17	1.37	4.0	8.0	Q3

TAPE AND REEL BOX DIMENSIONS

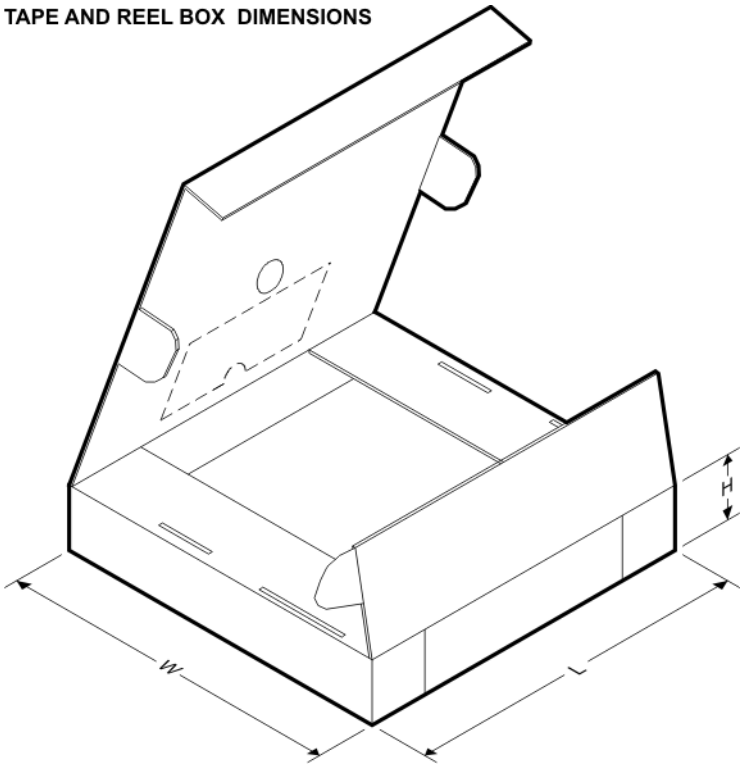

*All dimensions are nominal

Device	Package Type	Package Drawing	Pins	SPQ	Length (mm)	Width (mm)	Height (mm)
INA293A1IDBVR	SOT-23	DBV	5	3000	183.0	183.0	20.0
INA293A1IDBVT	SOT-23	DBV	5	250	183.0	183.0	20.0
INA293A2IDBVR	SOT-23	DBV	5	3000	183.0	183.0	20.0
INA293A2IDBVT	SOT-23	DBV	5	250	183.0	183.0	20.0
INA293A3IDBVR	SOT-23	DBV	5	3000	183.0	183.0	20.0
INA293A3IDBVT	SOT-23	DBV	5	250	183.0	183.0	20.0
INA293A4IDBVR	SOT-23	DBV	5	3000	183.0	183.0	20.0
INA293A4IDBVT	SOT-23	DBV	5	250	183.0	183.0	20.0
INA293A5IDBVR	SOT-23	DBV	5	3000	183.0	183.0	20.0
INA293A5IDBVT	SOT-23	DBV	5	250	183.0	183.0	20.0
INA293B1IDBVR	SOT-23	DBV	5	3000	183.0	183.0	20.0
INA293B1IDBVT	SOT-23	DBV	5	250	183.0	183.0	20.0
INA293B2IDBVR	SOT-23	DBV	5	3000	183.0	183.0	20.0
INA293B2IDBVT	SOT-23	DBV	5	250	183.0	183.0	20.0
INA293B3IDBVR	SOT-23	DBV	5	3000	183.0	183.0	20.0

Device	Package Type	Package Drawing	Pins	SPQ	Length (mm)	Width (mm)	Height (mm)
INA293B3IDBVT	SOT-23	DBV	5	250	183.0	183.0	20.0
INA293B4IDBVR	SOT-23	DBV	5	3000	183.0	183.0	20.0
INA293B4IDBVT	SOT-23	DBV	5	250	183.0	183.0	20.0
INA293B5IDBVR	SOT-23	DBV	5	3000	183.0	183.0	20.0
INA293B5IDBVT	SOT-23	DBV	5	250	183.0	183.0	20.0

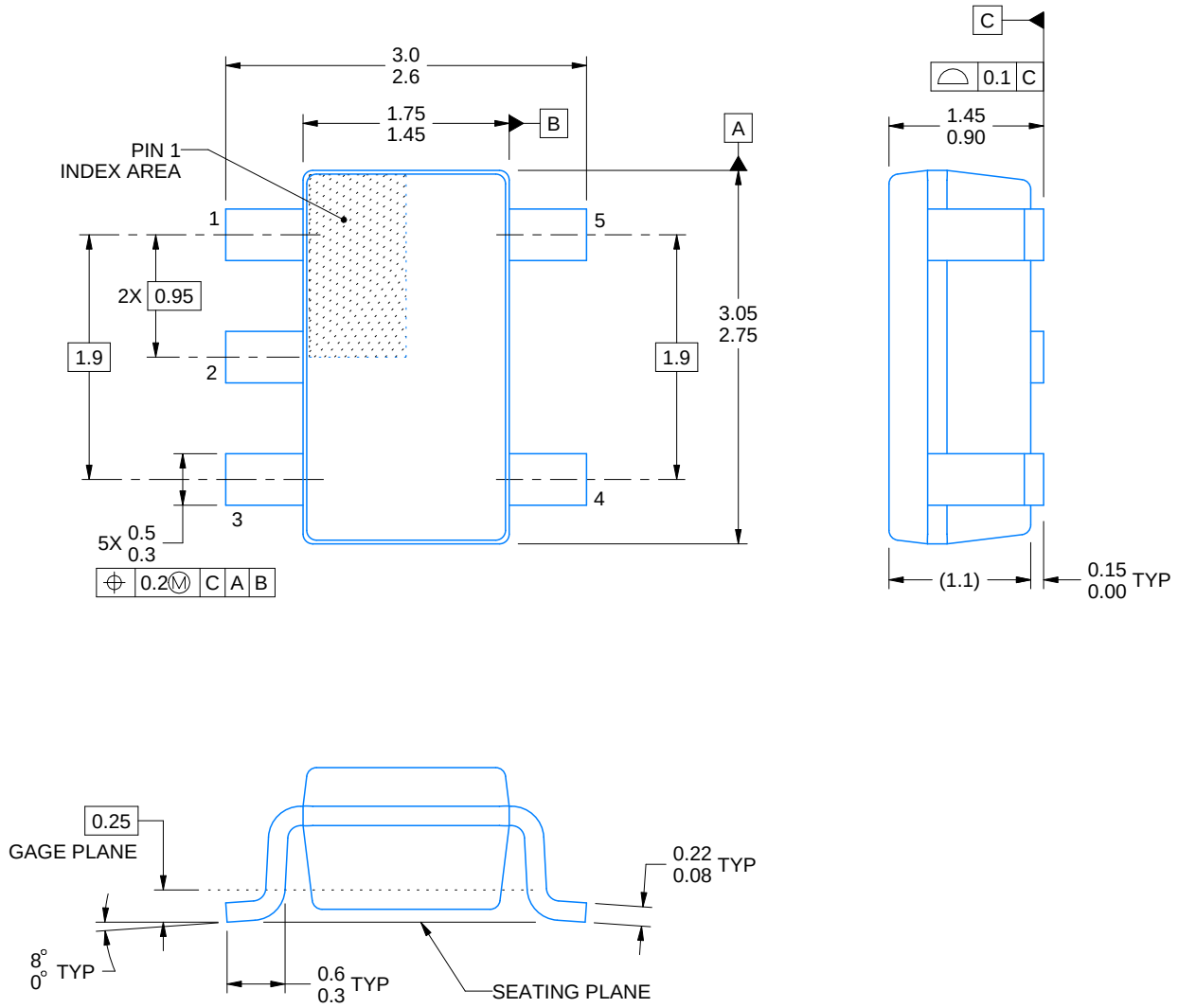

4214839/F 06/2021

NOTES:

1. All linear dimensions are in millimeters. Any dimensions in parenthesis are for reference only. Dimensioning and tolerancing per ASME Y14.5M.
2. This drawing is subject to change without notice.
3. Refernce JEDEC MO-178.
4. Body dimensions do not include mold flash, protrusions, or gate burrs. Mold flash, protrusions, or gate burrs shall not exceed 0.25 mm per side.

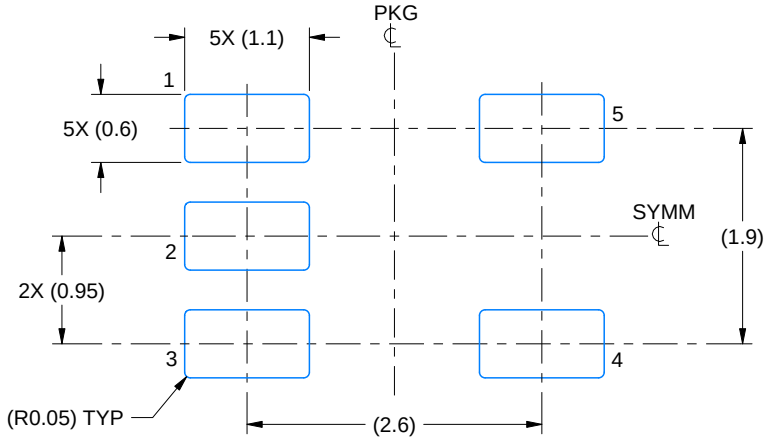

LAND PATTERN EXAMPLE
EXPOSED METAL SHOWN
SCALE:15X

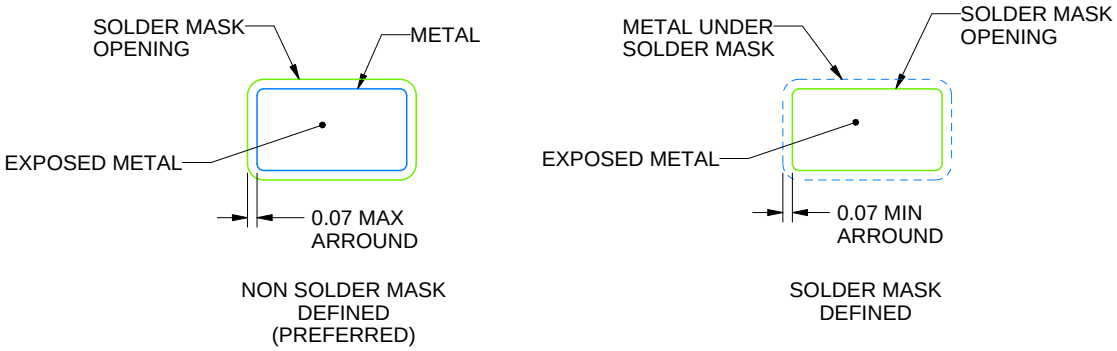

SOLDER MASK DETAILS

4214839/F 06/2021

NOTES: (continued)

5. Publication IPC-7351 may have alternate designs.
6. Solder mask tolerances between and around signal pads can vary based on board fabrication site.

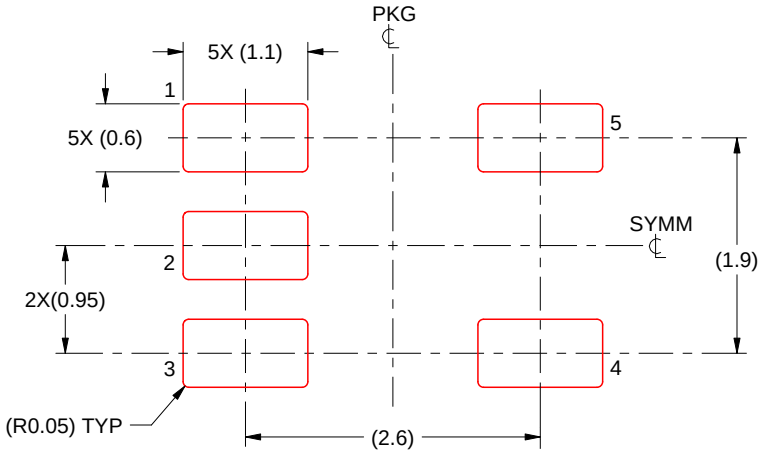

SOLDER PASTE EXAMPLE
BASED ON 0.125 mm THICK STENCIL
SCALE:15X

4214839/F 06/2021

NOTES: (continued)

7. Laser cutting apertures with trapezoidal walls and rounded corners may offer better paste release. IPC-7525 may have alternate design recommendations.
8. Board assembly site may have different recommendations for stencil design.

重要声明和免责声明

TI“按原样”提供技术和可靠性数据（包括数据表）、设计资源（包括参考设计）、应用或其他设计建议、网络工具、安全信息和其他资源，不保证没有瑕疵且不做出任何明示或暗示的担保，包括但不限于对适销性、某特定用途方面的适用性或不侵犯任何第三方知识产权的暗示担保。

这些资源可供使用 TI 产品进行设计的熟练开发人员使用。您将自行承担以下全部责任：(1) 针对您的应用选择合适的 TI 产品，(2) 设计、验证并测试您的应用，(3) 确保您的应用满足相应标准以及任何其他功能安全、信息安全、监管或其他要求。

这些资源如有变更，恕不另行通知。TI 授权您仅可将这些资源用于研发本资源所述的 TI 产品的应用。严禁对这些资源进行其他复制或展示。您无权使用任何其他 TI 知识产权或任何第三方知识产权。您应全额赔偿因在这些资源的使用中对 TI 及其代表造成的任何索赔、损害、成本、损失和债务，TI 对此概不负责。

TI 提供的产品受 TI 的销售条款或 ti.com 上其他适用条款/TI 产品随附的其他适用条款的约束。TI 提供这些资源并不会扩展或以其他方式更改 TI 针对 TI 产品发布的适用的担保或担保免责声明。

TI 反对并拒绝您可能提出的任何其他或不同的条款。

邮寄地址：Texas Instruments, Post Office Box 655303, Dallas, Texas 75265
Copyright © 2021，德州仪器 (TI) 公司