LM119QML High Speed Dual Comparator

Check for Samples: LM119QML

FEATURES

- **Available with radiation ensured**
  - **High Dose Rate 100 krad(Si)**
  - **ELDRS Free 100 krad(Si)**
- **Two independent comparators**
- **Operates from a single 5V supply**
- **Typically 80 ns response time at ±15V**
- **Minimum fan-out of 2 each side**
- **Maximum input current of 1 µA over temperature**
- **Inputs and outputs can be isolated from system ground**
- **High common mode slew rate**

DESCRIPTION

The LM119 is a precision high speed dual comparator fabricated on a single monolithic chip. It is designed to operate over a wide range of supply voltages down to a single 5V logic supply and ground. Further, it has higher gain and lower input currents than devices like the LM710. The uncommitted collector of the output stage makes the LM119 compatible with RTL, DTL and TTL as well as capable of driving lamps and relays at currents up to 25 mA.

Although designed primarily for applications requiring operation from digital logic supplies, the LM119 is fully specified for power supplies up to ±15V. It features faster response than the LM111 at the expense of higher power dissipation. However, the high speed, wide operating voltage range and low package count make the LM119 much more versatile than older devices like the LM711.

Connection Diagrams

CDIP Package

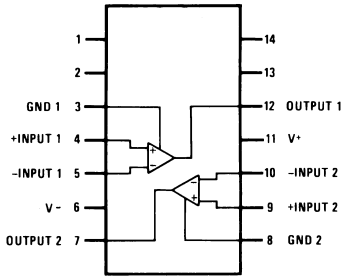

Figure 1. Top View
Package Number J0014A

LCCC Package

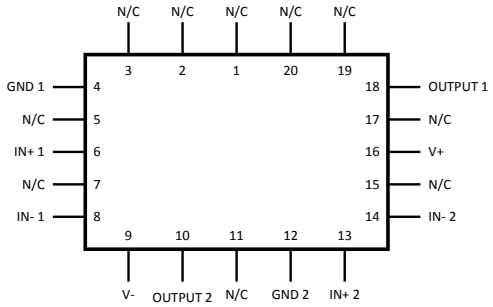

Figure 2. Top View
Package Number NAJ0020A

TO-100 Package

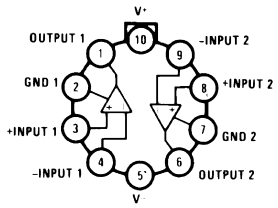

Case is connected to pin 5 (V⁻).

Figure 3. Top View
Package Number LME0010C

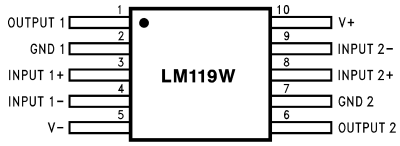

Figure 4. Top View
Package Number NAD0010A, NAC0010A

Please be aware that an important notice concerning availability, standard warranty, and use in critical applications of Texas Instruments semiconductor products and disclaimers thereto appears at the end of this data sheet.

All trademarks are the property of their respective owners.

PRODUCTION DATA information is current as of publication date. Products conform to specifications per the terms of the Texas Instruments standard warranty. Production processing does not necessarily include testing of all parameters.

Copyright © 2008–2013, Texas Instruments Incorporated

Schematic Diagram

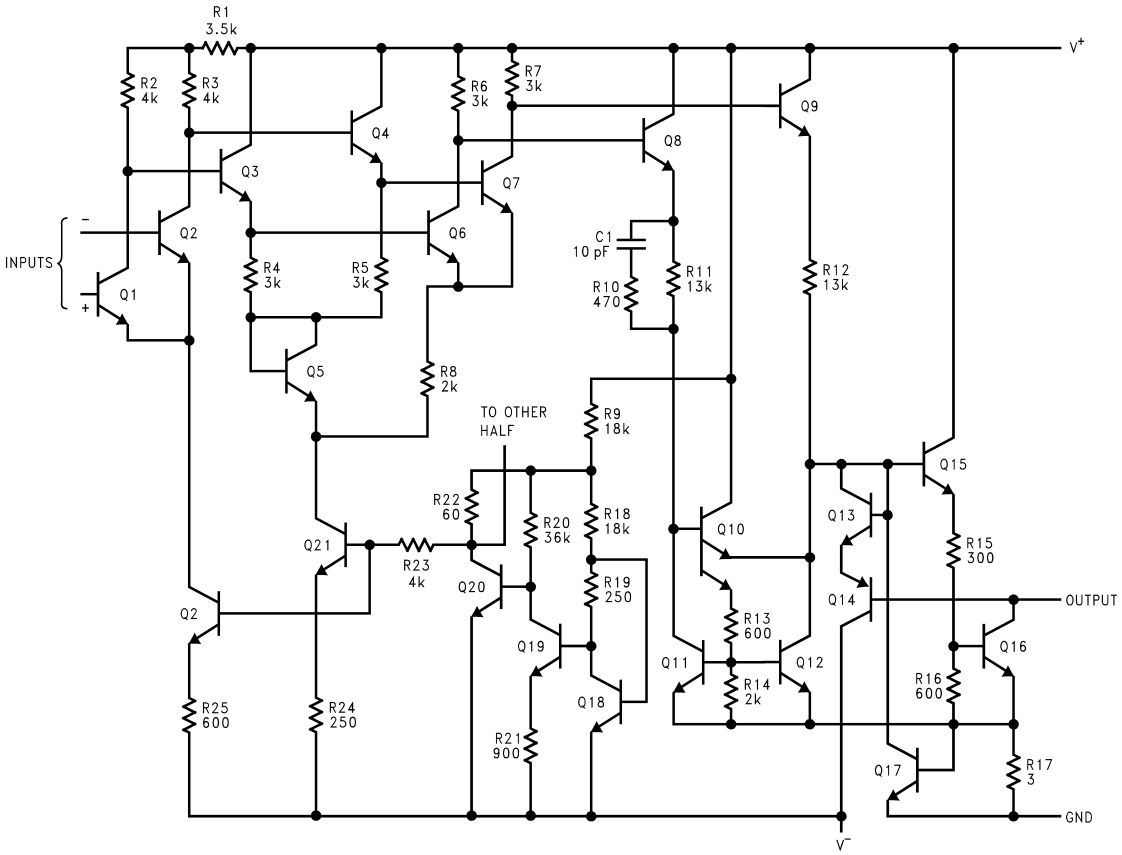

*Do not operate the LM119 with more than 16V between GND and V^+

These devices have limited built-in ESD protection. The leads should be shorted together or the device placed in conductive foam during storage or handling to prevent electrostatic damage to the MOS gates.

Copyright © 2008–2013, Texas Instruments Incorporated

Absolute Maximum Ratings [1]

Total Supply Voltage	36V
Output to Negative Supply Voltage	36V
Ground to Negative Supply Voltage	25V
Ground to Positive Supply Voltage	18V
Differential Input Voltage	±5V
Input Voltage [2]	±15V
Power Dissipation [3]	500 mW
Output Short Circuit Duration	10 sec
Storage Temperature Range	−65°C ≤ T_A ≤ 150°C
Operating Ambient Temperature Range	−55°C ≤ T_A ≤ 125°C
Maximum Junction Temperature (T_J)	150°C
Lead Temperature (Soldering, 10 sec.)	260°C
Thermal Resistance	
θ_{JA}	
LCCC Package (Still Air)	89°C/W
LCCC Package (500LF/Min Air flow)	63°C/W
TO-100 Package (Still Air)	162°C/W
TO-100 Package (500LF/Min Air flow)	88°C/W
CDIP Package (Still Air)	94°C/W
CDIP Package (500LF/Min Air flow)	52°C/W
CLGA Package (Still Air)	215°C/W
CLGA Package (500LF/Min Air flow)	132°C/W
CLGA Package (Still Air)	215°C/W
CLGA Package (500LF/Min Air flow)	132°C/W
θ_{JC}	
LCCC Package	5°C/W
TO-100 Package	31°C/W
CDIP Package	11°C/W
CLGA Package	13°C/W
CLGA Package	13°C/W
Package Weight	
LCCC Package	TBD
TO-100 Package	TBD
CDIP Package	TBD
CLGA Package	TBD
CLGA Package	225mg
ESD rating [4]	800V

(1) Absolute Maximum Ratings indicate limits beyond which damage to the device may occur. Operating Ratings indicate conditions for which the device is functional, but do not ensure specific performance limits. For ensured specifications and test conditions, see the Electrical Characteristics. The ensured specifications apply only for the test conditions listed. Some performance characteristics may degrade when the device is not operated under the listed test conditions.
(2) For supply voltages less than ±15V the absolute maximum input voltage is equal to the supply voltage.
(3) The maximum power dissipation must be derated at elevated temperatures and is dictated by T_{Jmax} (maximum junction temperature), θ_{JA} (package junction to ambient thermal resistance), and T_A (ambient temperature). The maximum allowable power dissipation at any temperature is $P_{Dmax} = (T_{Jmax} - T_A)/\theta_{JA}$ or the number given in the Absolute Maximum Ratings, whichever is lower.
(4) Human Body model, 1.5KΩ in series with 100pF.

Copyright © 2008–2013, Texas Instruments Incorporated

Table 1. Quality Conformance Inspection(1)

Subgroup	Description	Temp °C
1	Static tests at	25
2	Static tests at	125
3	Static tests at	-55
4	Dynamic tests at	25
5	Dynamic tests at	125
6	Dynamic tests at	-55
7	Functional tests at	25
8A	Functional tests at	125
8B	Functional tests at	-55
9	Switching tests at	25
10	Switching tests at	125
11	Switching tests at	-55
12	Settling time at	25
13	Settling time at	125
14	Settling time at	-55

(1) Mil-Std-883, Method 5005 - Group 5

Copyright © 2008–2013, Texas Instruments Incorporated

LM119/883 Electrical Characteristics DC Parameters

The following conditions apply, unless otherwise specified. V_{CM} = 0V

Symbol	Parameter	Conditions	Notes	Min	Max	Units	Sub-groups
$+I_{CC}$	Positive Supply Current	$\pm V_{CC}$ = ±15V, V_O = Low V^+ = 5.6V thru 1.4KΩ			11	mA	1
					11.5	mA	2
$-I_{CC}$	Negative Supply Current	$\pm V_{CC}$ = ±15V, V_O = Low V^+ = 5.6V thru 1.4KΩ		-4.2		mA	1
				-4.5		mA	2
I_{Leak}	Output Leakage Current	$^+V_{CC}$ = 15V, $^-V_{CC}$ = -1V, V_{Gnd} = 0V, V_O = 35V, V_I = 5mV			1.8	µA	1
					9.5	µA	2
					10.0	µA	3
I_{IB}	Input Bias Current	$\pm V_{CC}$ = ±15V			0.475	µA	1
					0.95	µA	2, 3
		$^+V_{CC}$ = 5V, $^-V_{CC}$ = 0V, V_{CM} = 1.5V			0.475	µA	1
					.95	µA	2, 3
V_{IO}	Input Offset Voltage	$^+V_{CC}$ = 5V, $^-V_{CC}$ = 0V, V_{CM} = 1V, R_S ≤ 5KΩ		-3.8	3.8	mV	1
				-6.8	6.8	mV	2, 3
		$^+V_{CC}$ = 5V, $^-V_{CC}$ = 0V, V_{CM} = 3V, R_S ≤ 5KΩ		-3.8	3.8	mV	1
				-6.8	6.8	mV	2, 3
		$\pm V_{CC}$ = ±15V, V_{CM} = 12V, R_S ≤ 5KΩ		-3.8	3.8	mV	1
				-6.8	6.8	mV	2, 3
		$\pm V_{CC}$ = ±15V, V_{CM} = -12V, R_S ≤ 5KΩ		-3.8	3.8	mV	1
				-6.8	6.8	mV	2, 3
I_{IO}	Input Offset Current	$^+V_{CC}$ = 5V, $^-V_{CC}$ = 0V, V_{CM} = 1V		-75	75	nA	1
				-100	100	nA	2, 3
		$^+V_{CC}$ = 5V, $^-V_{CC}$ = 0V, V_{CM} = 3V		-75	75	nA	1
				-100	100	nA	2, 3
		$\pm V_{CC}$ = ±15V, V_{CM} = 12V		-75	75	nA	1
				-100	100	nA	2, 3
		$\pm V_{CC}$ = ±15V, V_{CM} = -12V		-75	75	nA	1
				-100	100	nA	2, 3
V_{Sat}	Output Saturation Voltage	$\pm V_{CC}$ = ±15V, I_O = 25mA, V_I = -5mV			1.5	V	1
		$^+V_{CC}$ = 5V, $^-V_{CC}$ = 0V, I_O= 4.0mA	(1)		0.4	V	1, 2
			(1)		0.6	V	3
A_V	Voltage Gain	$\pm V_{CC}$ = ±15V, Delta V_O = 12V, R_L = 1.4KΩ	(2),(3)	10.5		K	4
			(2),(3)	10		K	5, 6
		$^+V_{CC}$ = 5V, $^-V_{CC}$ = 0V, Delta V_O = 4.5V, R_L = 1.4KΩ	(2),(4)	8.0		K	4
			(2),(4)	5.0		K	5
			(2),(4)	5.8		K	6

(1) Output is monitored by measuring V_I with limits from 0 to 6mV at all temperatures
(2) K = V/mV.
(3) Gain is computed with an output swing from +13.5V to +1.5V.
(4) Gain is computed with an output swing from +5.0V to +0.5V.

Copyright © 2008–2013, Texas Instruments Incorporated

LM119-SMD Electrical Characteristics SMD 8601401 DC Parameters

The following conditions apply, unless otherwise specified. V_{CM} = 0V

Symbol	Parameter	Conditions	Notes	Min	Max	Units	Sub-groups
$+I_{CC}$	Positive Supply Current	$\pm V_{CC}$ = ±15V, V_O = Low V^+ = 5.6V thru 1.4KΩ			11	mA	1
					11.5	mA	2, 3
$-I_{CC}$	Negative Supply Current	$\pm V_{CC}$ = ±15V, V_O = Low V^+ = 5.6V thru 1.4KΩ		-4.2		mA	1
				-4.5		mA	2
				-6.0		mA	3
I_{Leak}	Output Leakage Current	$^+V_{CC}$ = 15V, $^-V_{CC}$ = -1V, V_{Gnd} = 0V, V_O = 35V	(1)		1.8	µA	1
			(1)		10	µA	2, 3
I_{IB}	Input Bias Current	$\pm V_{CC}$ = ±15V			0.475	µA	1
					0.95	µA	2, 3
		$^+V_{CC}$ = 5V	(2)		0.475	µA	1
			(2)		.95	µA	2, 3
V_{IO}	Input Offset Voltage	$^+V_{CC}$ = 5V, V_{CM} = 1V, R_S ≤ 5KΩ	(2)	-3.8	3.8	mV	1
			(2)	-6.8	6.8	mV	2, 3
		$^+V_{CC}$ = 5V, V_{CM} = 3V, R_S ≤ 5KΩ	(2)	-3.8	3.8	mV	1
			(2)	-6.8	6.8	mV	2, 3
		$\pm V_{CC}$ = ±15V, V_{CM} = 12V, R_S ≤ 5KΩ		-3.8	3.8	mV	1
				-6.8	6.8	mV	2, 3
		$\pm V_{CC}$ = ±15V, V_{CM} = -12V, R_S ≤ 5KΩ		-3.8	3.8	mV	1
				-6.8	6.8	mV	2, 3
I_{IO}	Input Offset Current	$^+V_{CC}$ = 5V, V_{CM} = 1V	(2)	-75	75	nA	1
			(2)	-100	100	nA	2, 3
		$^+V_{CC}$ = 5V, V_{CM} = 3V	(2)	-75	75	nA	1
			(2)	-100	100	nA	2, 3
		$\pm V_{CC}$ = ±15V, V_{CM} = 12V		-75	75	nA	1
				-100	100	nA	2, 3
		$\pm V_{CC}$ = ±15V, V_{CM} = -12V		-75	75	nA	1
				-100	100	nA	2, 3
V_I	Input Voltage Range	$^+V_{CC}$ = 5V	(2), (3)	1.0	3.0	V	1, 2, 3
		$\pm V_{CC}$ = ±15V	(3)	-12	12	V	1, 2, 3
V_{Sat}	Output Saturation Voltage	$\pm V_{CC}$ = ±15V, I_O = 25mA, V_I ≤ -5mV	(1)		1.5	V	1, 2, 3
		$^+V_{CC}$ = 3.5V, $^-V_{CC}$ = -1V, V_I ≤ -6mV, I_O ≤ 3.2mA			0.4	V	1, 2
					0.6	V	3
A_V	Voltage Gain	$\pm V_{CC}$ = ±15V, Delta V_O = 12V, R_L = 1.4KΩ	(4)	10.5		K	4
			(4)	10		K	5, 6
		$^+V_{CC}$ = 5V, $^-V_{CC}$ = 0V, Delta V_O = 4.5V, R_L = 1.4KΩ	(2), (4)	8.0		K	4
			(2), (4)	5.0		K	5
			(2), (4)	5.8		K	6
CMRR	Common Mode Rejection Ratio	$\pm V_{CC}$ = ±15V, V_{CM} = ±12V		80		dB	4

(1) V_I ≥ 8mV at extremes for I_{Leak} and V_I ≤ −8mV at extremes for V_{Sat} (V_I to exceed V_{OS}.
(2) 5V differential across $+V_{CC}$ and $-V_{CC}$.
(3) Parameter ensured by V_{IO} and I_{IO} tests.
(4) K = V/mV.

Copyright © 2008–2013, Texas Instruments Incorporated

LM119 Electrical Characteristics SMD 5962-9679801, HIGH DOSE RATE DC Parameters

The following conditions apply, unless otherwise specified. V_{CM} = 0V

Symbol	Parameter	Conditions	Notes	Min	Max	Units	Sub-groups
$+I_{CC}$	Positive Supply Current	$\pm V_{CC}$ = ±15V, V_O = Low V^+ = 5.6V thru 1.4KΩ			11	mA	1
					11.5	mA	2, 3
$-I_{CC}$	Negative Supply Current	$\pm V_{CC}$ = ±15V, V_O = Low V^+ = 5.6V thru 1.4KΩ		-4.2		mA	1
				-4.5		mA	2
				-6.0		mA	3
I_{Leak}	Output Leakage Current	$^+V_{CC}$ = 15V, $^-V_{CC}$ = -1V, V_{Gnd} = 0V, V_O = 35V	(1)		1.8	µA	1
			(1)		10	µA	2, 3
I_{IB}	Input Bias Current	$\pm V_{CC}$ = ±15V			0.475	µA	1
					0.95	µA	2, 3
		$^+V_{CC}$ = 5V	(2)		0.475	µA	1
			(2)		.95	µA	2, 3
V_{IO}	Input Offset Voltage	$^+V_{CC}$ = 5V, V_{CM} = 1V, R_S ≤ 5KΩ	(2)	-3.8	3.8	mV	1
			(2)	-6.8	6.8	mV	2, 3
		$^+V_{CC}$ = 5V, V_{CM} = 3V, R_S ≤ 5KΩ	(2)	-3.8	3.8	mV	1
			(2)	-6.8	6.8	mV	2, 3
		$\pm V_{CC}$ = ±15V, V_{CM} = 12V, R_S ≤ 5KΩ		-3.8	3.8	mV	1
				-6.8	6.8	mV	2, 3
		$\pm V_{CC}$ = ±15V, V_{CM} = -12V, R_S ≤ 5KΩ		-3.8	3.8	mV	1
				-6.8	6.8	mV	2, 3
I_{IO}	Input Offset Current	$^+V_{CC}$ = 5V, V_{CM} = 1V	(2)	-75	75	nA	1
			(2)	-100	100	nA	2, 3
		$^+V_{CC}$ = 5V, V_{CM} = 3V	(2)	-75	75	nA	1
			(2)	-100	100	nA	2, 3
		$\pm V_{CC}$ = ±15V, V_{CM} = 12V		-75	75	nA	1
				-100	100	nA	2, 3
		$\pm V_{CC}$ = ±15V, V_{CM} = -12V		-75	75	nA	1
				-100	100	nA	2, 3
V_I	Input Voltage Range	$^+V_{CC}$ = 5V	(2), (3)	1.0	3.0	V	1, 2, 3
		$\pm V_{CC}$ = ±15V	(3)	-12	12	V	1, 2, 3
V_{Sat}	Output Saturation Voltage	$\pm V_{CC}$ = ±15V, I_O = 25mA, V_I ≤ -5mV	(1)		1.5	V	1, 2, 3
		$^+V_{CC}$ = 3.5V, $^-V_{CC}$ = -1V, V_I ≤ -6mV, I_O ≤ 3.2mA			0.4	V	1, 2
					0.6	V	3
A_V	Voltage Gain	$\pm V_{CC}$ = ±15V, Delta V_O = 12V, R_L = 1.4KΩ	(4)	10.5		K	4
			(4)	10		K	5, 6
		$^+V_{CC}$ = 5V, $^-V_{CC}$ = 0V, Delta V_O = 4.5V, R_L = 1.4KΩ	(2), (4)	8.0		K	4
			(2), (4)	5.0		K	5
			(2), (4)	5.8		K	6
CMRR	Common Mode Rejection Ratio	$\pm V_{CC}$ = ±15V, V_{CM} = ±12V		80		dB	4

(1) V_I ≥ 8mV at extremes for I_{Leak} and V_I ≤ −8mV at extremes for V_{Sat} (V_I to exceed V_{OS}.
(2) 5V differential across $+V_{CC}$ and $-V_{CC}$.
(3) Parameter ensured by V_{IO} and I_{IO} tests.
(4) K = V/mV.

Copyright © 2008–2013, Texas Instruments Incorporated

SMD 5962-9679801, HIGH DOSE RATE DC DELTA Parameters

The following conditions apply, unless otherwise specified.
V_{CM} = 0V, Delta calculations performed on QMLV devices at group B, subgroup 5 only.

Symbol	Parameter	Conditions	Notes	Min	Max	Units	Sub-groups
$+I_{CC}$	Positive Supply Current	$\pm V_{CC}$ = ±15V, V_O = Low V^+ = 5.6V thru 1.4KΩ		-1.0	1.0	mA	1
$-I_{CC}$	Negative Supply Current	$\pm V_{CC}$ = ±15V, V_O = Low V^+ = 5.6V thru 1.4KΩ		-0.5	0.5	mA	1
V_{IO}	Input Offset Voltage	$^+V_{CC}$ = 5V, V_{CM} = 1V, R_S ≤ 5KΩ		-0.4	0.4	mV	1

SMD 5962-9679801, High Dose Rate 100K Post Radiation Parameters @ 25°C (1)

The following conditions apply, unless otherwise specified. V_{CM} = 0V

Symbol	Parameter	Conditions	Notes	Min	Max	Units	Sub-groups
I_{IB}	Input Bias Current	$\pm V_{CC}$ = ±15V			1.0	µA	1
		V_{CC} = 5V			1.0	µA	1
V_{IO}	Input Offset Voltage	$^+V_{CC}$ = 5V, V_{CM} = 1V, R_S ≤ 5KΩ		-4.0	4.0	mV	1
		$^+V_{CC}$ = 5V, V_{CM} = 3V, R_S ≤ 5KΩ		-4.0	4.0	mV	1
		$\pm V_{CC}$ = ±15V, V_{CM} = 12V, R_S ≤ 5KΩ		-4.0	4.0	mV	1
		$\pm V_{CC}$ = ±15V, V_{CM} = −12V, R_S ≤ 5KΩ		-4.0	4.0	mV	1

(1) Pre and post irradiation limits are identical to those listed under AC and DC electrical characteristics except as listed in the Post Radiation Limits Table. These parts may be dose rate sensitive in a space environment and demonstrate enhanced low dose rate sensitivity. Radiation end point limits for the noted parameters are ensured only for the conditions as specified in MIL-STD-883, per Test Method 1019, Condition A.

LM119 Electrical Characteristics SMD 5962-9679802, ELDRS FREE DC Parameters

The following conditions apply, unless otherwise specified. V_{CM} = 0V

Symbol	Parameter	Conditions	Notes	Min	Max	Units	Sub-groups
$+I_{CC}$	Positive Supply Current	$\pm V_{CC}$ = ±15V, V_O = Low V^+ = 5.6V thru 1.4KΩ			11	mA	1
					11.5	mA	2, 3
$-I_{CC}$	Negative Supply Current	$\pm V_{CC}$ = ±15V, V_O = Low V^+ = 5.6V thru 1.4KΩ		-4.2		mA	1
				-4.5		mA	2
				-6.0		mA	3
I_{Leak}	Output Leakage Current	$^+V_{CC}$ = 15V, $^-V_{CC}$ = -1V, V_{Gnd} = 0V, V_O = 35V	(1)		1.8	µA	1
			(1)		10	µA	2, 3
I_{IB}	Input Bias Current	$\pm V_{CC}$ = ±15V			0.475	µA	1
					0.95	µA	2, 3
		$^+V_{CC}$ = 5V	(2)		0.475	µA	1
			(2)		.95	µA	2, 3

(1) V_I ≥ 8mV at extremes for I_{Leak} and V_I ≤ −8mV at extremes for V_{Sat} (V_I to exceed V_{OS}.
(2) 5V differential across $+V_{CC}$ and $-V_{CC}$.

Copyright © 2008–2013, Texas Instruments Incorporated

LM119 Electrical Characteristics SMD 5962-9679802, ELDRS FREE DC Parameters (continued)

The following conditions apply, unless otherwise specified. V_{CM} = 0V

Symbol	Parameter	Conditions	Notes	Min	Max	Units	Sub-groups
V_{IO}	Input Offset Voltage	$^{+}V_{CC}$ = 5V, V_{CM} = 1V, R_S ≤ 5KΩ	(2)	-3.8	3.8	mV	1
			(2)	-6.8	6.8	mV	2, 3
		$^{+}V_{CC}$ = 5V, V_{CM} = 3V, R_S ≤ 5KΩ	(2)	-3.8	3.8	mV	1
			(2)	-6.8	6.8	mV	2, 3
		±V_{CC} = ±15V, V_{CM} = 12V, R_S ≤ 5KΩ		-3.8	3.8	mV	1
				-6.8	6.8	mV	2, 3
		±V_{CC} = ±15V, V_{CM} = -12V, R_S ≤ 5KΩ		-3.8	3.8	mV	1
				-6.8	6.8	mV	2, 3
I_{IO}	Input Offset Current	$^{+}V_{CC}$ = 5V, V_{CM} = 1V	(2)	-75	75	nA	1
			(2)	-100	100	nA	2, 3
		$^{+}V_{CC}$ = 5V, V_{CM} = 3V	(2)	-75	75	nA	1
			(2)	-100	100	nA	2, 3
		±V_{CC} = ±15V, V_{CM} = 12V		-75	75	nA	1
				-100	100	nA	2, 3
		±V_{CC} = ±15V, V_{CM} = -12V		-75	75	nA	1
				-100	100	nA	2, 3
V_I	Input Voltage Range	$^{+}V_{CC}$ = 5V	(3), (3)	1.0	3.0	V	1, 2, 3
		±V_{CC} = ±15V	(3)	-12	12	V	1, 2, 3
V_{Sat}	Output Saturation Voltage	±V_{CC} = ±15V, I_O = 25mA, V_I ≤ -5mV	(1)		1.5	V	1, 2, 3
		$^{+}V_{CC}$ = 3.5V, $^{-}V_{CC}$ = -1V, V_I ≤ -6mV, I_O ≤ 3.2mA			0.4	V	1, 2
					0.6	V	3
A_V	Voltage Gain	±V_{CC} = ±15V, Delta V_O = 12V, R_L = 1.4KΩ	(4)	10.5		K	4
			(4)	10		K	5, 6
		$^{+}V_{CC}$ = 5V, $^{-}V_{CC}$ = 0V, Delta V_O = 4.5V, R_L = 1.4KΩ	(5), (4)	8.0		K	4
			(5), (4)	5.0		K	5
			(5), (4)	5.8		K	6
CMRR	Common Mode Rejection Ratio	±V_{CC} = ±15V, V_{CM} = ±12V		80		dB	4

(3) Parameter ensured by V_{IO} and I_{IO} tests.
(4) K = V/mV.
(5) 5V differential across $+V_{CC}$ and $-V_{CC}$.

SMD 5962-9679802, ELDRS FREE DC DELTA Parameters

The following conditions apply, unless otherwise specified.
V_{CM} = 0V, Delta calculations performed on QMLV devices at group B, subgroup 5 only.

Symbol	Parameter	Conditions	Notes	Min	Max	Units	Sub-groups
$+I_{CC}$	Positive Supply Current	±V_{CC} = ±15V, V_O = Low V^+ = 5.6V thru 1.4KΩ		-1.0	1.0	mA	1
$-I_{CC}$	Negative Supply Current	±V_{CC} = ±15V, V_O = Low V^+ = 5.6V thru 1.4KΩ		-0.5	0.5	mA	1
V_{IO}	Input Offset Voltage	$^{+}V_{CC}$ = 5V, V_{CM} = 1V, R_S ≤ 5KΩ		-0.4	0.4	mV	1

Copyright © 2008–2013, Texas Instruments Incorporated

SMD 5962-9679802, ELDRS FREE 100K Post Radiation Parameters @ 25°C (1)

The following conditions apply, unless otherwise specified. V_{CM} = 0V

Symbol	Parameter	Conditions	Notes	Min	Max	Units	Sub-groups
I_{IB}	Input Bias Current	$\pm V_{CC}$ = ±15V			1.0	µA	1
		V_{CC} = 5V			1.0	µA	1
V_{IO}	Input Offset Voltage	$^{+}V_{CC}$ = 5V, V_{CM} = 1V, $R_S \leq$ 5KΩ		-4.0	4.0	mV	1
		$^{+}V_{CC}$ = 5V, V_{CM} = 3V, $R_S \leq$ 5KΩ		-4.0	4.0	mV	1
		$\pm V_{CC}$ = ±15V, V_{CM} = 12V, $R_S \leq$ 5KΩ		-4.0	4.0	mV	1
		$\pm V_{CC}$ = ±15V, V_{CM} = −12V, $R_S \leq$ 5KΩ		-4.0	4.0	mV	1

(1) Pre and post irradiation limits are identical to those listed under AC and DC electrical characteristics except as listed in the Post Radiation Limits Table. Low dose rate testing has been performed on a wafer-by-wafer basis, per Test Method 1019, Condition D of MIL-STD-883, with no enhanced low dose rate sensitivity (ELDRS).

Copyright © 2008–2013, Texas Instruments Incorporated

Typical Performance Characteristics

Input Currents

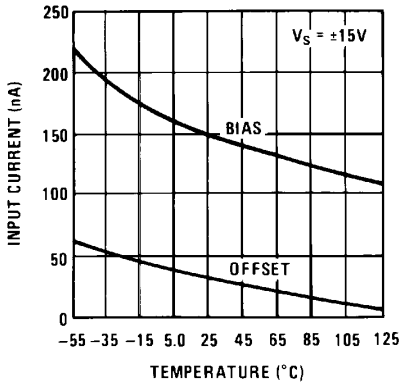

Figure 5.

Common Mode Limits

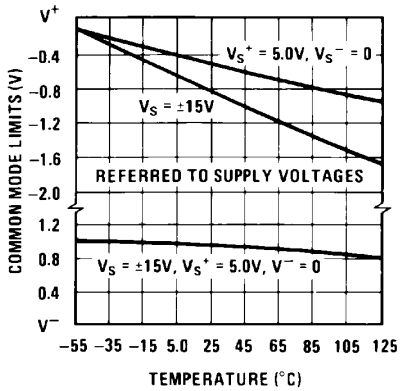

Figure 6.

Transfer Function

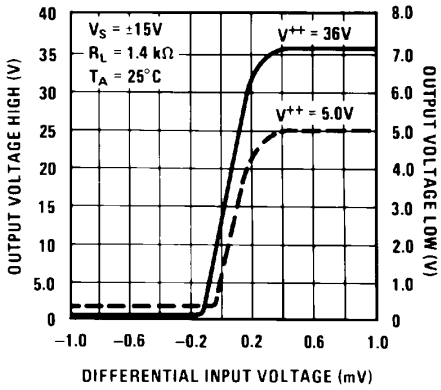

Figure 7.

Response Time for Various Input Overdrives

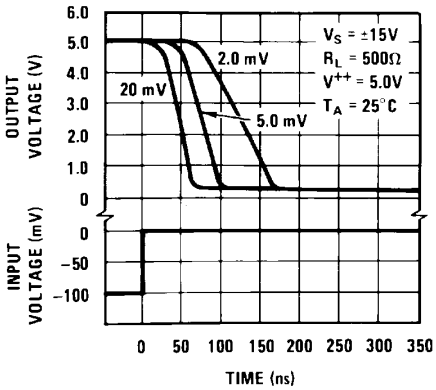

Figure 8.

Response Time for Various Input Overdrives

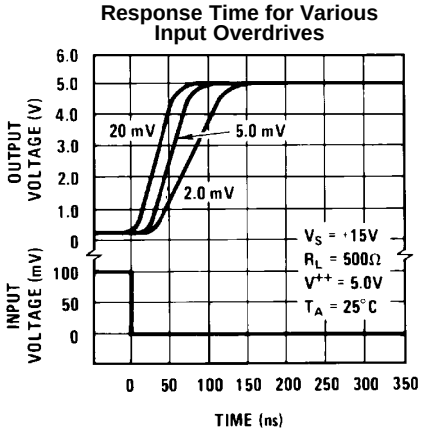

Figure 9.

Input Characteristics

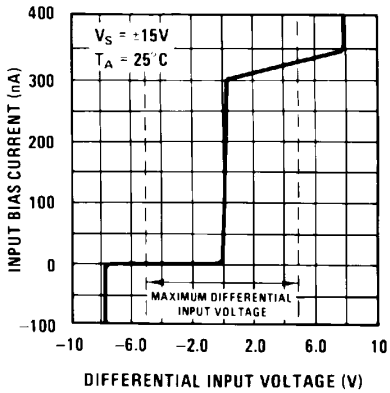

Figure 10.

Typical Performance Characteristics (continued)

Response Time for Various Input Overdrives

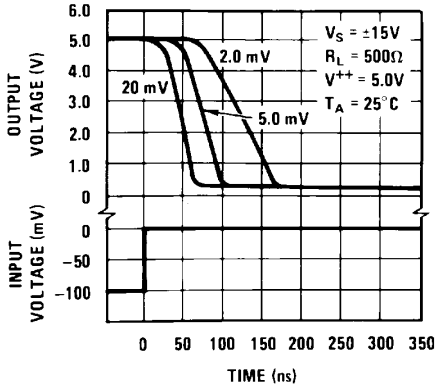

Figure 11.

Response Time for Various Input Overdrives

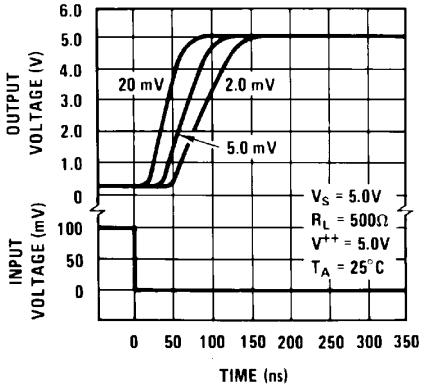

Figure 12.

Output Saturation Voltage

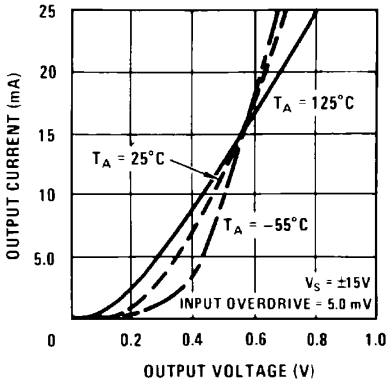

Figure 13.

Supply Current

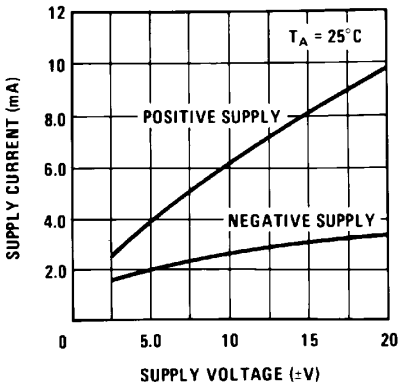

Figure 14.

Supply Current

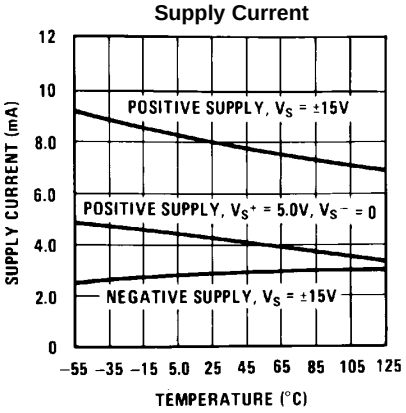

Figure 15.

Output Limiting Characteristics

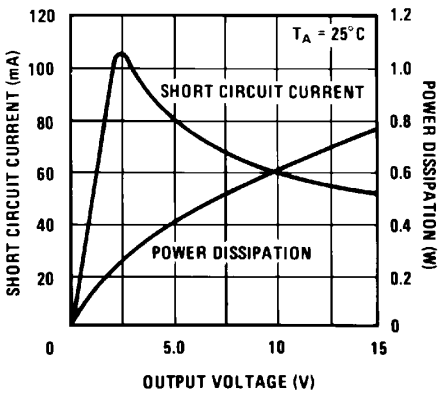

Figure 16.

Copyright © 2008–2013, Texas Instruments Incorporated

TYPICAL APPLICATIONS

Relay Driver

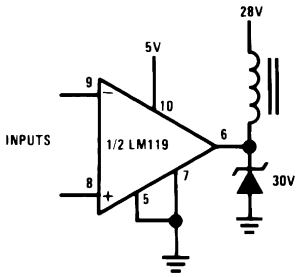

Pin numbers are for LME0010C package.

Window Detector

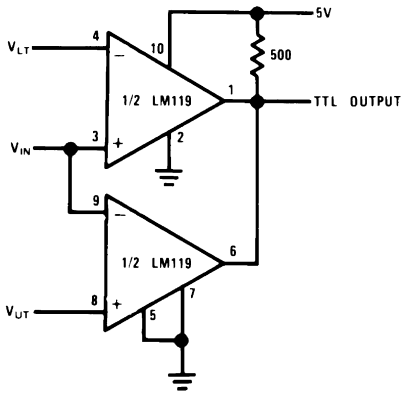

V_{OUT} = 5V for $V_{LT} \leq V_{IN} \leq V_{UT}$
V_{OUT} = 0 for $V_{IN} \leq V_{LT}$or $V_{IN} \geq V_{UT}$

REVISION HISTORY

Date Released	Revision	Section	Originator	Changes
07/24/08	A	New release to corporate format	L. Lytle	2 MDS datasheets converted into one corporate data sheet format. Added Radiation information. MDS data sheets MNLM119-X Rev. 0F1 & MDLM119-X Rev 2A2 will be archived.
01/13/09	B	Features, Ordering Info., Electrical Section, Notes 13 and 14	Larry McGee	Added reference to ELDRS and Die NSID's to data sheet. Correction from: 100k rd(Si) to 100 krad(Si) in ordering info. Changed wording in Notes 13 and 14 Revision A will be Archived.
03/26/2013	B	All Sections		Changed layout of National Data Sheet to TI format

Copyright © 2008–2013, Texas Instruments Incorporated

PACKAGING INFORMATION

Orderable Device	Status (1)	Package Type	Package Drawing	Pins	Package Qty	Eco Plan (2)	Lead finish/ Ball material (6)	MSL Peak Temp (3)	Op Temp (°C)	Device Marking (4/5)	Samples
5962-9679801VCA	ACTIVE	CDIP	J	14	25	Non-RoHS & Green	Call TI	Level-1-NA-UNLIM	-55 to 125	LM119J-QMLV 5962-9679801VCA Q	Samples
5962R9679801V9A	ACTIVE	DIESALE	Y	0	32	RoHS & Green	Call TI	Level-1-NA-UNLIM	-55 to 125		Samples
5962R9679801VCA	ACTIVE	CDIP	J	14	25	Non-RoHS & Green	Call TI	Level-1-NA-UNLIM	-55 to 125	LM119JRQMLV 5962R9679801VCA Q	Samples
5962R9679801VHA	ACTIVE	CFP	NAD	10	19	Non-RoHS & Green	Call TI	Level-1-NA-UNLIM	-55 to 125	LM119W RQMLV Q 5962R96798 01VHA ACO 01VHA >T	Samples
5962R9679801VIA	ACTIVE	TO-100	LME	10	20	Non-RoHS & Non-Green	Call TI	Call TI	-55 to 125	LM119HRQMLV 5962R9679801VIA Q ACO 5962R9679801VIA Q >T	Samples
5962R9679801VXA	ACTIVE	CFP	NAC	10	54	Non-RoHS & Green	Call TI	Level-1-NA-UNLIM	-55 to 125	LM119WG RQMLV Q 5962R96798 01VXA ACO 01VXA >T	Samples
5962R9679802V9A	ACTIVE	DIESALE	Y	0	32	RoHS & Green	Call TI	Level-1-NA-UNLIM	-55 to 125		Samples
5962R9679802VCA	ACTIVE	CDIP	J	14	25	Non-RoHS & Green	Call TI	Level-1-NA-UNLIM	-55 to 125	LM119JRLQMLV 5962R9679802VCA Q	Samples
5962R9679802VHA	ACTIVE	CFP	NAD	10	19	Non-RoHS & Green	Call TI	Level-1-NA-UNLIM	-55 to 125	LM119W RLQMLV Q 5962R96798 02VHA ACO (LM111W, LM119W) 02VHA >T	Samples
5962R9679802VIA	ACTIVE	TO-100	LME	10	20	Non-RoHS & Non-Green	Call TI	Call TI	-55 to 125	LM119HRLQMLV 5962R9679802VIA Q ACO 5962R9679802VIA Q >T	Samples

Orderable Device	Status (1)	Package Type	Package Drawing	Pins	Package Qty	Eco Plan (2)	Lead finish/ Ball material (6)	MSL Peak Temp (3)	Op Temp (°C)	Device Marking (4/5)	Samples
5962R9679802VXA	ACTIVE	CFP	NAC	10	54	Non-RoHS & Green	Call TI	Level-1-NA-UNLIM	-55 to 125	LM119WG RLQMLV Q 5962R96798 02VXA ACO 02VXA >T	Samples
86014012A	ACTIVE	LCCC	NAJ	20	50	RoHS-Exempt & Green	Call TI	Level-1-NA-UNLIM	-55 to 125	LM119E -SMD Q 5962-86014 012A ACO 012A >T	Samples
8601401CA	ACTIVE	CDIP	J	14	25	Non-RoHS & Green	Call TI	Level-1-NA-UNLIM	-55 to 125	LM119J-SMD 5962-8601401CA Q	Samples
8601401HA	ACTIVE	CFP	NAD	10	19	Non-RoHS & Green	Call TI	Level-1-NA-UNLIM	-55 to 125	LM119W -SMD Q 5962-86014 01HA ACO 01HA >T	Samples
8601401IA	ACTIVE	TO-100	LME	10	20	Non-RoHS & Non-Green	Call TI	Call TI	-55 to 125	LM119H-SMD 5962-8601401IA Q A CO 5962-8601401IA Q > T	Samples
LM119 MD8	ACTIVE	DIESALE	Y	0	192	RoHS & Green	Call TI	Level-1-NA-UNLIM	-55 to 125		Samples
LM119 MDE	ACTIVE	DIESALE	Y	0	32	RoHS & Green	Call TI	Level-1-NA-UNLIM	-55 to 125		Samples
LM119 MDR	ACTIVE	DIESALE	Y	0	32	RoHS & Green	Call TI	Level-1-NA-UNLIM	-55 to 125		Samples
LM119E-SMD	ACTIVE	LCCC	NAJ	20	50	RoHS-Exempt & Green	Call TI	Level-1-NA-UNLIM	-55 to 125	LM119E -SMD Q 5962-86014 012A ACO 012A >T	Samples
LM119E/883	ACTIVE	LCCC	NAJ	20	50	RoHS-Exempt & Green	Call TI	Level-1-NA-UNLIM	-55 to 125	LM119E /883 Q ACO /883 Q >T	Samples
LM119H-SMD	ACTIVE	TO-100	LME	10	20	Non-RoHS & Non-Green	Call TI	Call TI	-55 to 125	LM119H-SMD 5962-8601401IA Q A CO	Samples

Orderable Device	Status (1)	Package Type	Package Drawing	Pins	Package Qty	Eco Plan (2)	Lead finish/ Ball material (6)	MSL Peak Temp (3)	Op Temp (°C)	Device Marking (4/5)	Samples
										5962-8601401IA Q > T	
LM119H/883	ACTIVE	TO-100	LME	10	20	Non-RoHS & Non-Green	Call TI	Call TI	-55 to 125	LM119H/883 Q ACO LM119H/883 Q >T	Samples
LM119HRLQMLV	ACTIVE	TO-100	LME	10	20	Non-RoHS & Non-Green	Call TI	Call TI	-55 to 125	LM119HRLQMLV 5962R9679802VIA Q ACO 5962R9679802VIA Q >T	Samples
LM119HRQMLV	ACTIVE	TO-100	LME	10	20	Non-RoHS & Green	Call TI	Level-1-NA-UNLIM	-55 to 125	LM119HRQMLV 5962R9679801VIA Q ACO 5962R9679801VIA Q >T	Samples
LM119J-QMLV	ACTIVE	CDIP	J	14	25	Non-RoHS & Green	Call TI	Level-1-NA-UNLIM	-55 to 125	LM119J-QMLV 5962-9679801VCA Q	Samples
LM119J-SMD	ACTIVE	CDIP	J	14	25	Non-RoHS & Green	Call TI	Level-1-NA-UNLIM	-55 to 125	LM119J-SMD 5962-8601401CA Q	Samples
LM119J/883	ACTIVE	CDIP	J	14	25	Non-RoHS & Green	Call TI	Level-1-NA-UNLIM	-55 to 125	LM119J/883 Q	Samples
LM119JRLQMLV	ACTIVE	CDIP	J	14	25	Non-RoHS & Green	Call TI	Level-1-NA-UNLIM	-55 to 125	LM119JRLQMLV 5962R9679802VCA Q	Samples
LM119JRQMLV	ACTIVE	CDIP	J	14	25	Non-RoHS & Green	Call TI	Level-1-NA-UNLIM	-55 to 125	LM119JRQMLV 5962R9679801VCA Q	Samples
LM119W-SMD	ACTIVE	CFP	NAD	10	19	Non-RoHS & Green	Call TI	Level-1-NA-UNLIM	-55 to 125	LM119W -SMD Q 5962-86014 01HA ACO 01HA >T	Samples
LM119W/883	ACTIVE	CFP	NAD	10	19	Non-RoHS & Green	Call TI	Level-1-NA-UNLIM	-55 to 125	LM119W /883 Q ACO /883 Q >T	Samples
LM119WGRLQMLV	ACTIVE	CFP	NAC	10	54	Non-RoHS & Green	Call TI	Level-1-NA-UNLIM	-55 to 125	LM119WG RLQMLV Q 5962R96798 02VXA ACO 02VXA >T	Samples

Orderable Device	Status (1)	Package Type	Package Drawing	Pins	Package Qty	Eco Plan (2)	Lead finish/ Ball material (6)	MSL Peak Temp (3)	Op Temp (°C)	Device Marking (4/5)	Samples
LM119WGRQMLV	ACTIVE	CFP	NAC	10	54	Non-RoHS & Green	Call TI	Level-1-NA-UNLIM	-55 to 125	LM119WG RQMLV Q 5962R96798 01VXA ACO 01VXA >T	Samples
LM119WRLQMLV	ACTIVE	CFP	NAD	10	19	Non-RoHS & Green	Call TI	Level-1-NA-UNLIM	-55 to 125	LM119W RLQMLV Q 5962R96798 02VHA ACO (LM111W, LM119W) 02VHA >T	Samples
LM119WRQMLV	ACTIVE	CFP	NAD	10	19	Non-RoHS & Green	Call TI	Level-1-NA-UNLIM	-55 to 125	LM119W RQMLV Q 5962R96798 01VHA ACO 01VHA >T	Samples

(1) The marketing status values are defined as follows:
ACTIVE: Product device recommended for new designs.
LIFEBUY: TI has announced that the device will be discontinued, and a lifetime-buy period is in effect.
NRND: Not recommended for new designs. Device is in production to support existing customers, but TI does not recommend using this part in a new design.
PREVIEW: Device has been announced but is not in production. Samples may or may not be available.
OBSOLETE: TI has discontinued the production of the device.

(2) **RoHS:** TI defines "RoHS" to mean semiconductor products that are compliant with the current EU RoHS requirements for all 10 RoHS substances, including the requirement that RoHS substance do not exceed 0.1% by weight in homogeneous materials. Where designed to be soldered at high temperatures, "RoHS" products are suitable for use in specified lead-free processes. TI may reference these types of products as "Pb-Free".
RoHS Exempt: TI defines "RoHS Exempt" to mean products that contain lead but are compliant with EU RoHS pursuant to a specific EU RoHS exemption.
Green: TI defines "Green" to mean the content of Chlorine (Cl) and Bromine (Br) based flame retardants meet JS709B low halogen requirements of <=1000ppm threshold. Antimony trioxide based flame retardants must also meet the <=1000ppm threshold requirement.

(3) MSL, Peak Temp. - The Moisture Sensitivity Level rating according to the JEDEC industry standard classifications, and peak solder temperature.

(4) There may be additional marking, which relates to the logo, the lot trace code information, or the environmental category on the device.

(5) Multiple Device Markings will be inside parentheses. Only one Device Marking contained in parentheses and separated by a "~" will appear on a device. If a line is indented then it is a continuation of the previous line and the two combined represent the entire Device Marking for that device.

(6) Lead finish/Ball material - Orderable Devices may have multiple material finish options. Finish options are separated by a vertical ruled line. Lead finish/Ball material values may wrap to two lines if the finish value exceeds the maximum column width.

Important Information and Disclaimer: The information provided on this page represents TI's knowledge and belief as of the date that it is provided. TI bases its knowledge and belief on information provided by third parties, and makes no representation or warranty as to the accuracy of such information. Efforts are underway to better integrate information from third parties. TI has taken and continues to take reasonable steps to provide representative and accurate information but may not have conducted destructive testing or chemical analysis on incoming materials and chemicals. TI and TI suppliers consider certain information to be proprietary, and thus CAS numbers and other limited information may not be available for release.

In no event shall TI's liability arising out of such information exceed the total purchase price of the TI part(s) at issue in this document sold by TI to Customer on an annual basis.

OTHER QUALIFIED VERSIONS OF LM119QML, LM119QML-SP :

- Military : LM119QML
- Space : LM119QML-SP

NOTE: Qualified Version Definitions:

- Military - QML certified for Military and Defense Applications
- Space - Radiation tolerant, ceramic packaging and qualified for use in Space-based application

TUBE

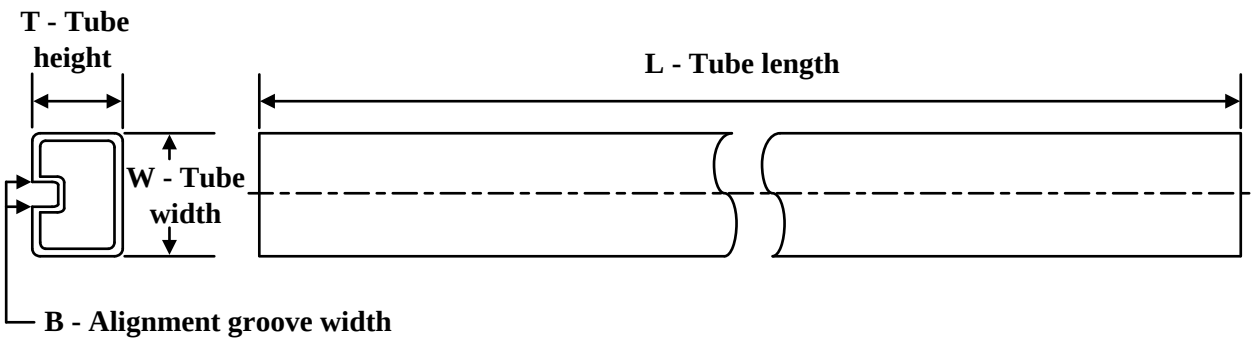

*All dimensions are nominal

Device	Package Name	Package Type	Pins	SPQ	L (mm)	W (mm)	T (µm)	B (mm)
5962-9679801VCA	J	CDIP	14	25	506.98	15.24	13440	NA
5962R9679801VCA	J	CDIP	14	25	506.98	15.24	13440	NA
5962R9679801VHA	NAD	CFP	10	19	502	23	9398	9.78
5962R9679802VCA	J	CDIP	14	25	506.98	15.24	13440	NA
5962R9679802VCA	J	CDIP	14	25	506.98	15.24	13440	NA
5962R9679802VHA	NAD	CFP	10	19	502	23	9398	9.78
86014012A	NAJ	LCCC	20	50	470	11	3810	0
8601401CA	J	CDIP	14	25	506.98	15.24	13440	NA
8601401HA	NAD	CFP	10	19	502	23	9398	9.78
LM119E-SMD	NAJ	LCCC	20	50	470	11	3810	0
LM119E/883	NAJ	LCCC	20	50	470	11	3810	0
LM119J-QMLV	J	CDIP	14	25	506.98	15.24	13440	NA
LM119J-SMD	J	CDIP	14	25	506.98	15.24	13440	NA
LM119J/883	J	CDIP	14	25	506.98	15.24	13440	NA
LM119JRLQMLV	J	CDIP	14	25	506.98	15.24	13440	NA
LM119JRLQMLV	J	CDIP	14	25	506.98	15.24	13440	NA
LM119JRQMLV	J	CDIP	14	25	506.98	15.24	13440	NA
LM119W-SMD	NAD	CFP	10	19	502	23	9398	9.78
LM119W/883	NAD	CFP	10	19	502	23	9398	9.78
LM119WRLQMLV	NAD	CFP	10	19	502	23	9398	9.78
LM119WRQMLV	NAD	CFP	10	19	502	23	9398	9.78

TRAY

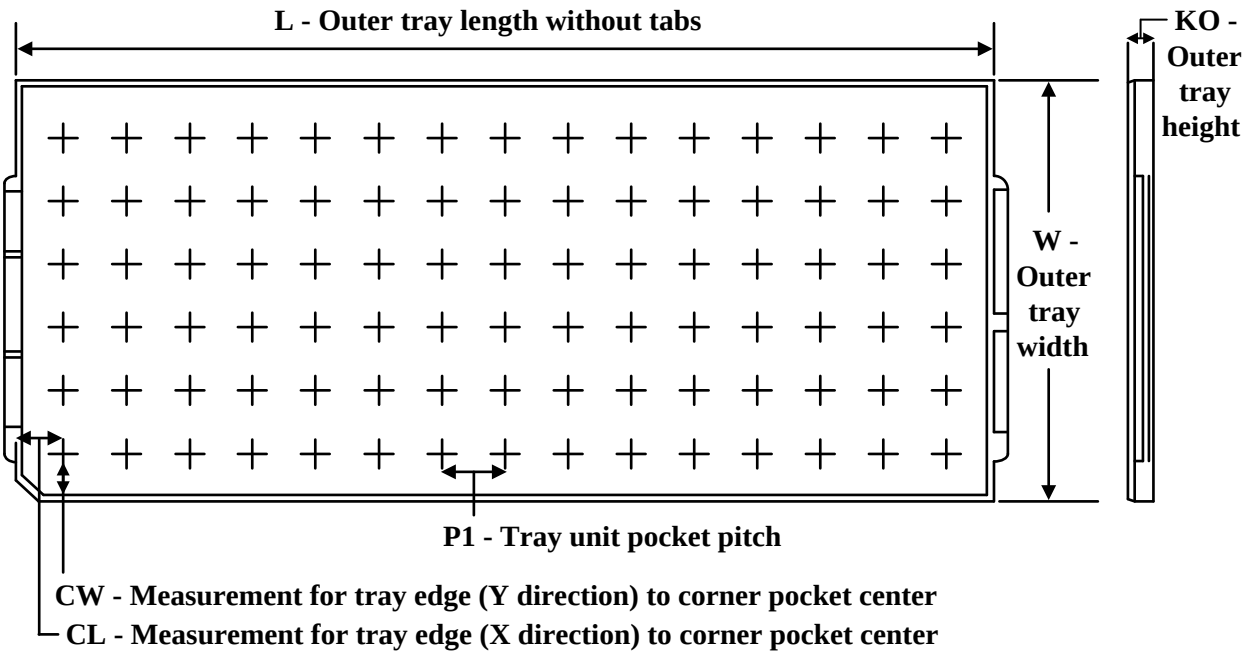

Chamfer on Tray corner indicates Pin 1 orientation of packed units.

*All dimensions are nominal

Device	Package Name	Package Type	Pins	SPQ	Unit array matrix	Max temperature (°C)	L (mm)	W (mm)	K0 (µm)	P1 (mm)	CL (mm)	CW (mm)
5962R9679801VIA	LME	TO-CAN	10	20	2 X 10	150	126.49	61.98	8890	11.18	12.95	18.54
5962R9679801VXA	NAC	CFP	10	54	6 X 9	100	101.6	101.6	8001	2.78	16.08	16.08
5962R9679802VIA	LME	TO-CAN	10	20	2 X 10	150	126.49	61.98	8890	11.18	12.95	18.54
5962R9679802VXA	NAC	CFP	10	54	6 X 9	100	101.6	101.6	8001	2.78	16.08	16.08
8601401IA	LME	TO-CAN	10	20	2 X 10	150	126.49	61.98	8890	11.18	12.95	18.54
LM119H-SMD	LME	TO-CAN	10	20	2 X 10	150	126.49	61.98	8890	11.18	12.95	18.54
LM119H/883	LME	TO-CAN	10	20	2 X 10	150	126.49	61.98	8890	11.18	12.95	18.54
LM119HRLQMLV	LME	TO-CAN	10	20	2 X 10	150	126.49	61.98	8890	11.18	12.95	18.54
LM119HRQMLV	LME	TO-CAN	10	20	2 X 10	150	126.49	61.98	8890	11.18	12.95	18.54
LM119WGRLQMLV	NAC	CFP	10	54	6 X 9	100	101.6	101.6	8001	2.78	16.08	16.08
LM119WGRQMLV	NAC	CFP	10	54	6 X 9	100	101.6	101.6	8001	2.78	16.08	16.08

NAJ0020A

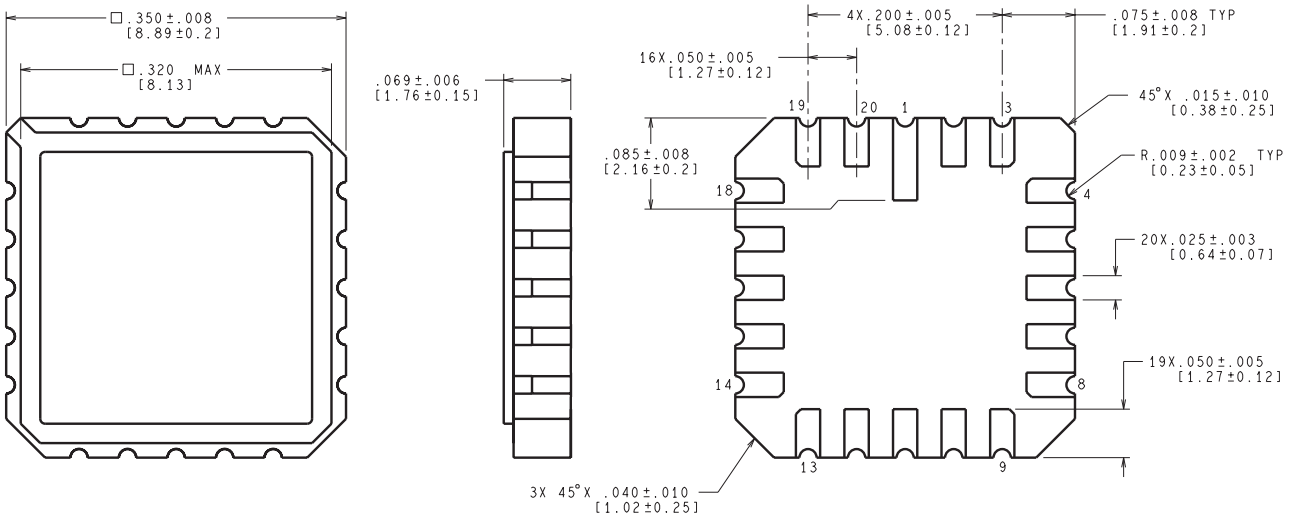

CONTROLLING DIMENSION IS INCH
VALUES IN [ ] ARE MILLIMETERS

E20A (Rev F)

LME 10 TO-CAN - 5.72 mm max height

METAL CYLINDRICAL PACKAGE

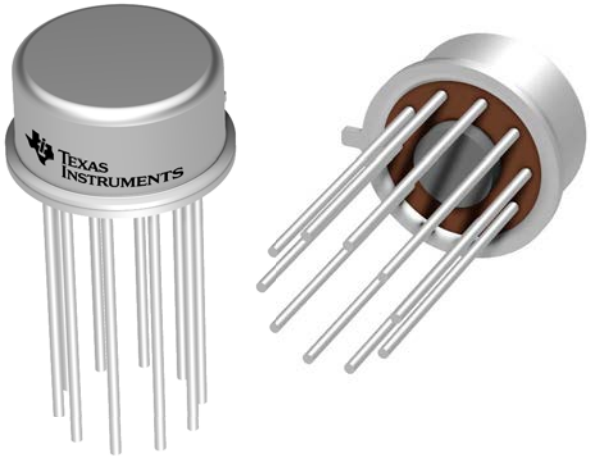

Images above are just a representation of the package family, actual package may vary.
Refer to the product data sheet for package details.

4202488/B

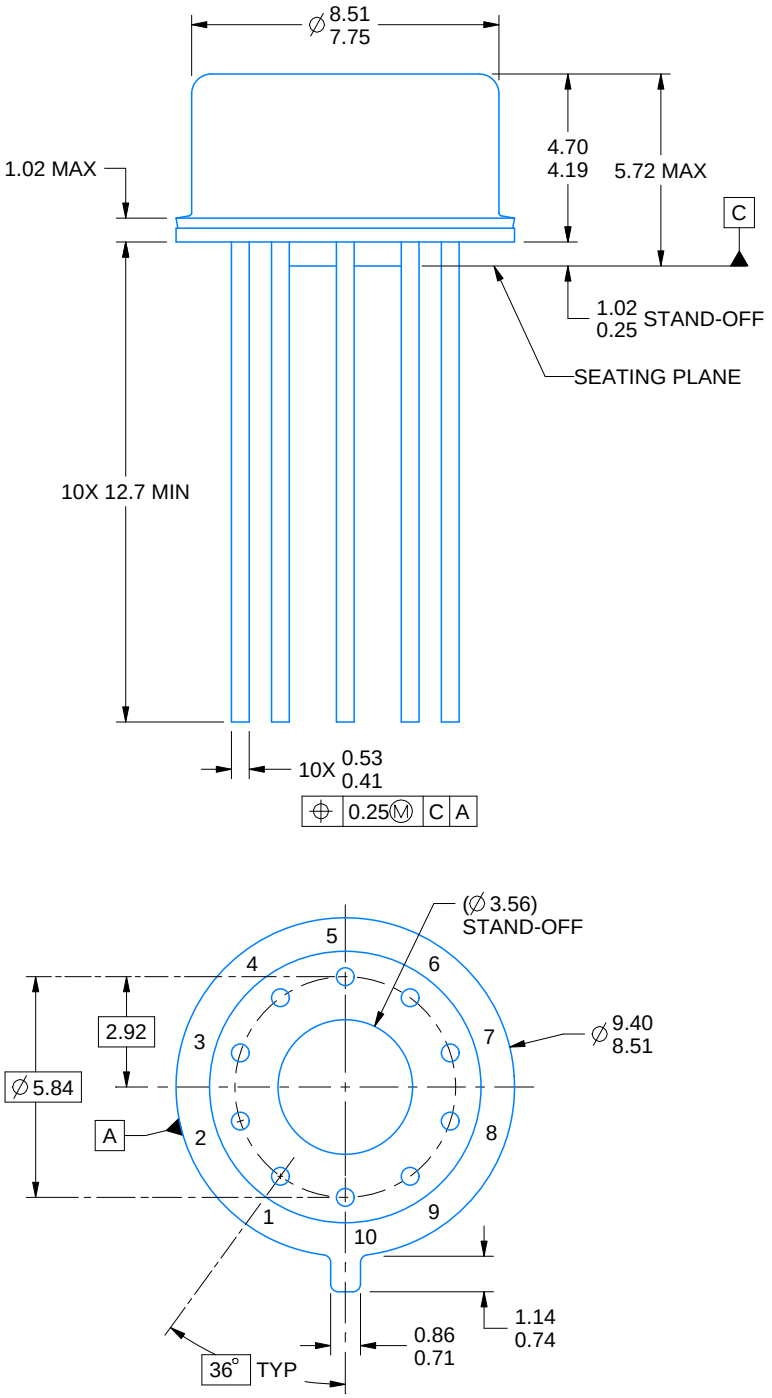

4220604/A 05/2017

NOTES:

1. All linear dimensions are in millimeters. Any dimensions in parenthesis are for reference only. Dimensioning and tolerancing per ASME Y14.5M.
2. This drawing is subject to change without notice.
3. Reference JEDEC registration MO-006/TO-100.

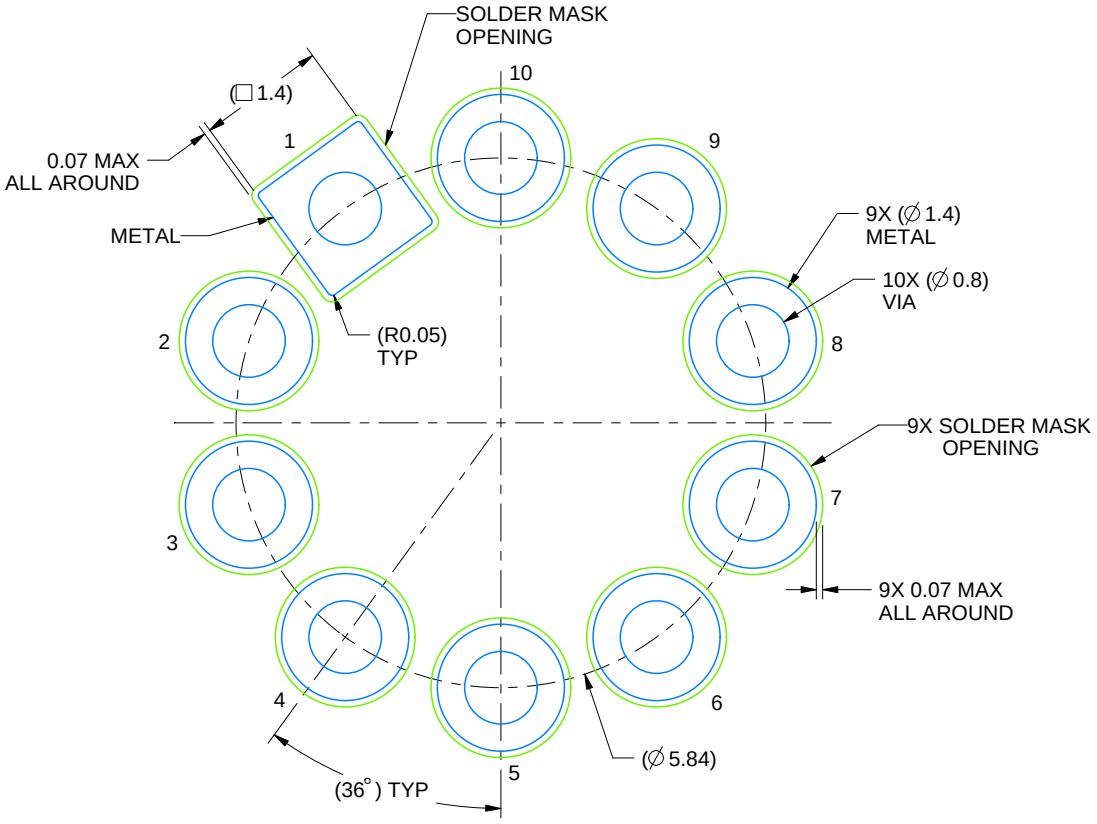

LAND PATTERN EXAMPLE
NON-SOLDER MASK DEFINED
SCALE: 12X

4220604/A 05/2017

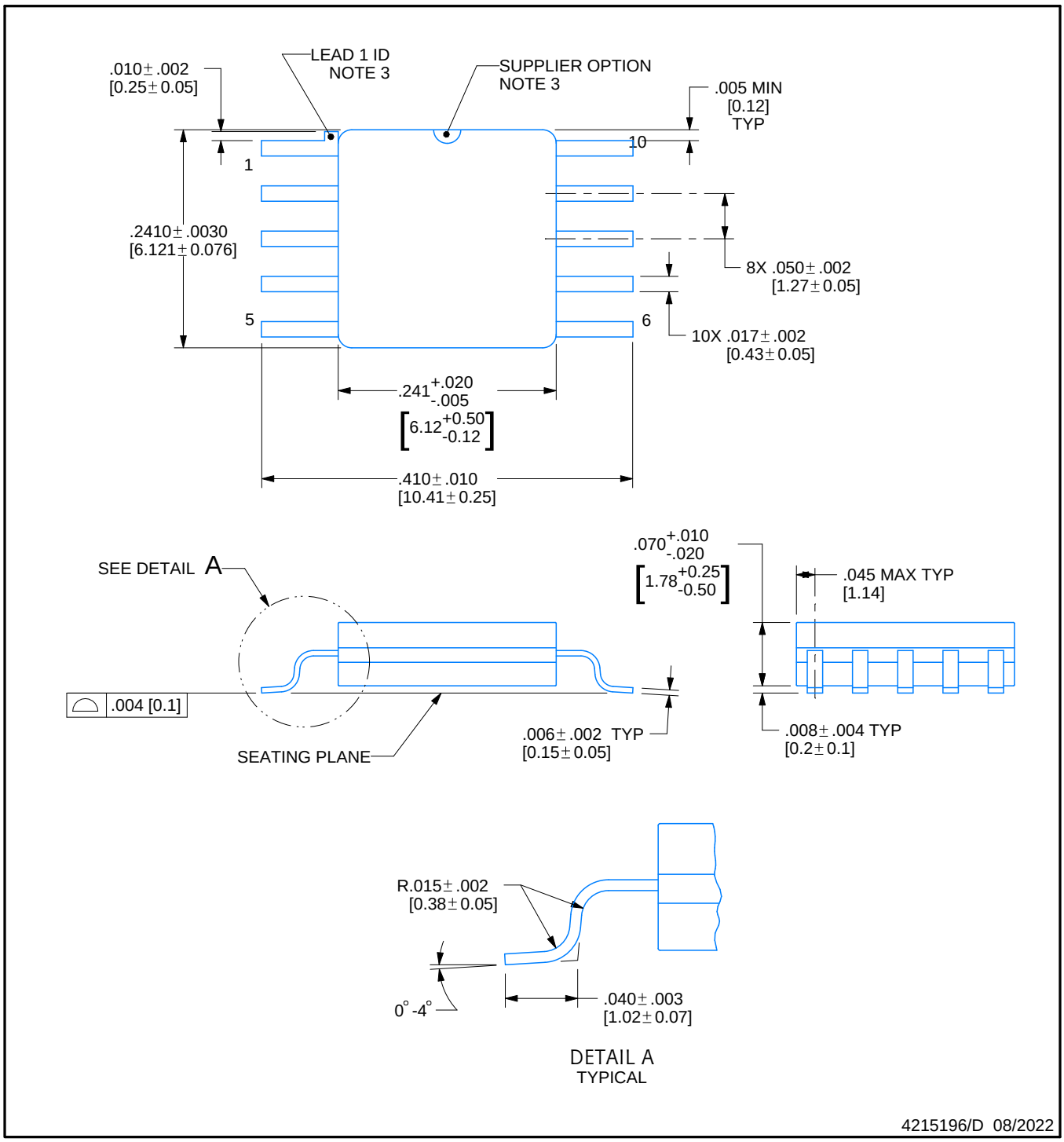

NOTES:

1. All controlling linear dimensions are in inches. Dimensions in brackets are in millimeters. Any dimension in brackets or parenthesis are for reference only. Dimensioning and tolerancing per ASME Y14.5M.
2. For solder thickness and composition, see the "Lead Finish Composition/Thickness" link in the packaging section of the Texas Instruments website
3. Lead 1 identification shall be:
   a) A notch or other mark within this area
   b) A tab on lead 1, either side
4. No JEDEC registration as of December 2021

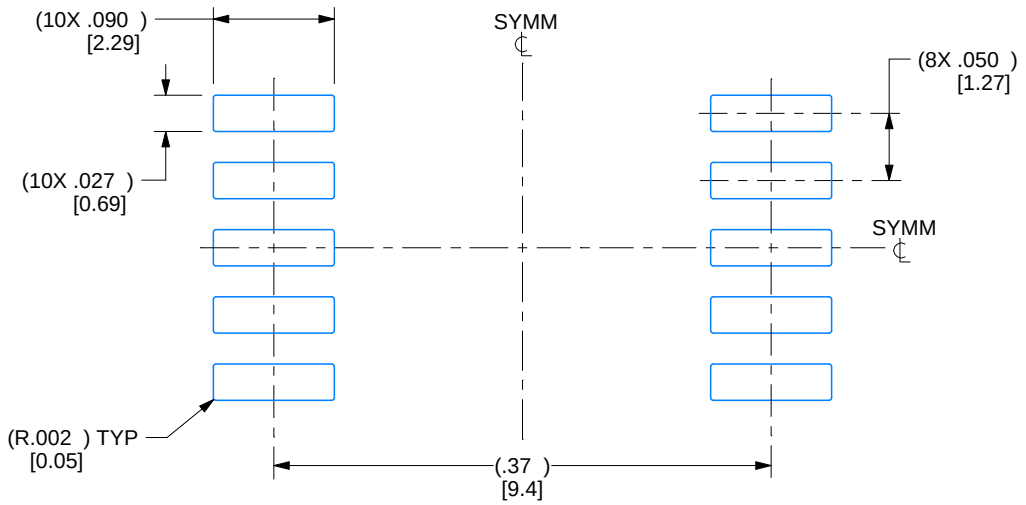

LAND PATTERN EXAMPLE
EXPOSED METAL SHOWN
SCALE: 7X

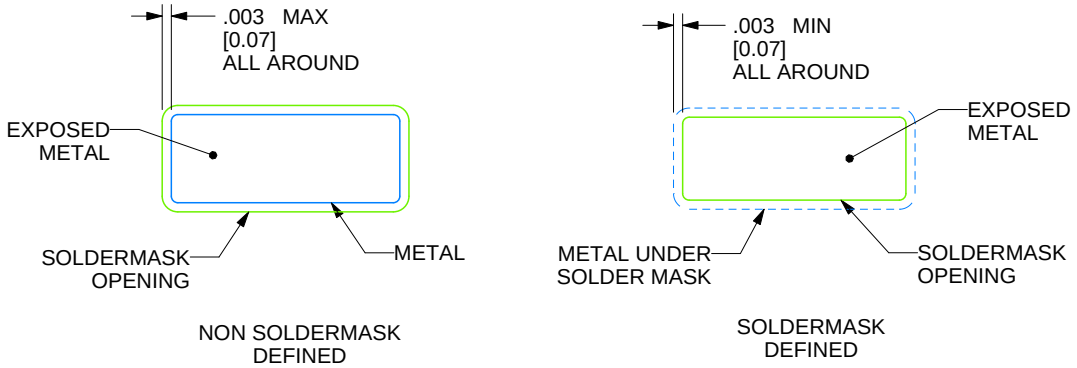

4215196/D 08/2022

REVISIONS

REV	DESCRIPTION	E.C.N.	DATE	BY/APP'D
A	RELEASE TO DOCUMENT CONTROL	2197877	12/30/2021	DAVID CHIN / ANIS FAUZI
B	NO CHANGE TO DRAWING; REVISION FOR YODA RELEASE;	2198820	02/14/2022	K. SINCERBOX
C	CHANGE PIN 1 ID LOCATION ON PIN	2198845	02/18/2022	D. CHIN / K. SINCERBOX
D	.2410± .0030 WAS .2700 +.0012/-.0002;	2200915	08/08/2022	D. CHIN / K. SINCERBOX

J 14 CDIP - 5.08 mm max height

CERAMIC DUAL IN LINE PACKAGE

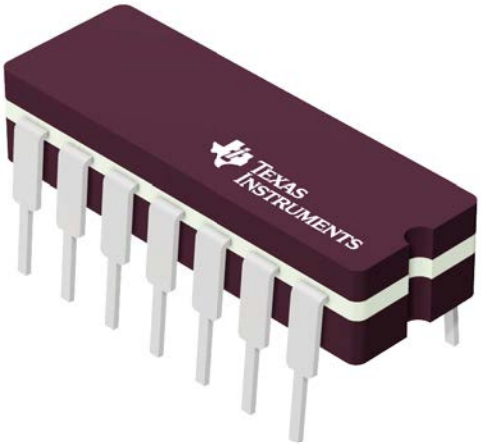

Images above are just a representation of the package family, actual package may vary.
Refer to the product data sheet for package details.

4040083-5/G

PACKAGE OUTLINE

J0014A

CDIP - 5.08 mm max height

CERAMIC DUAL IN LINE PACKAGE

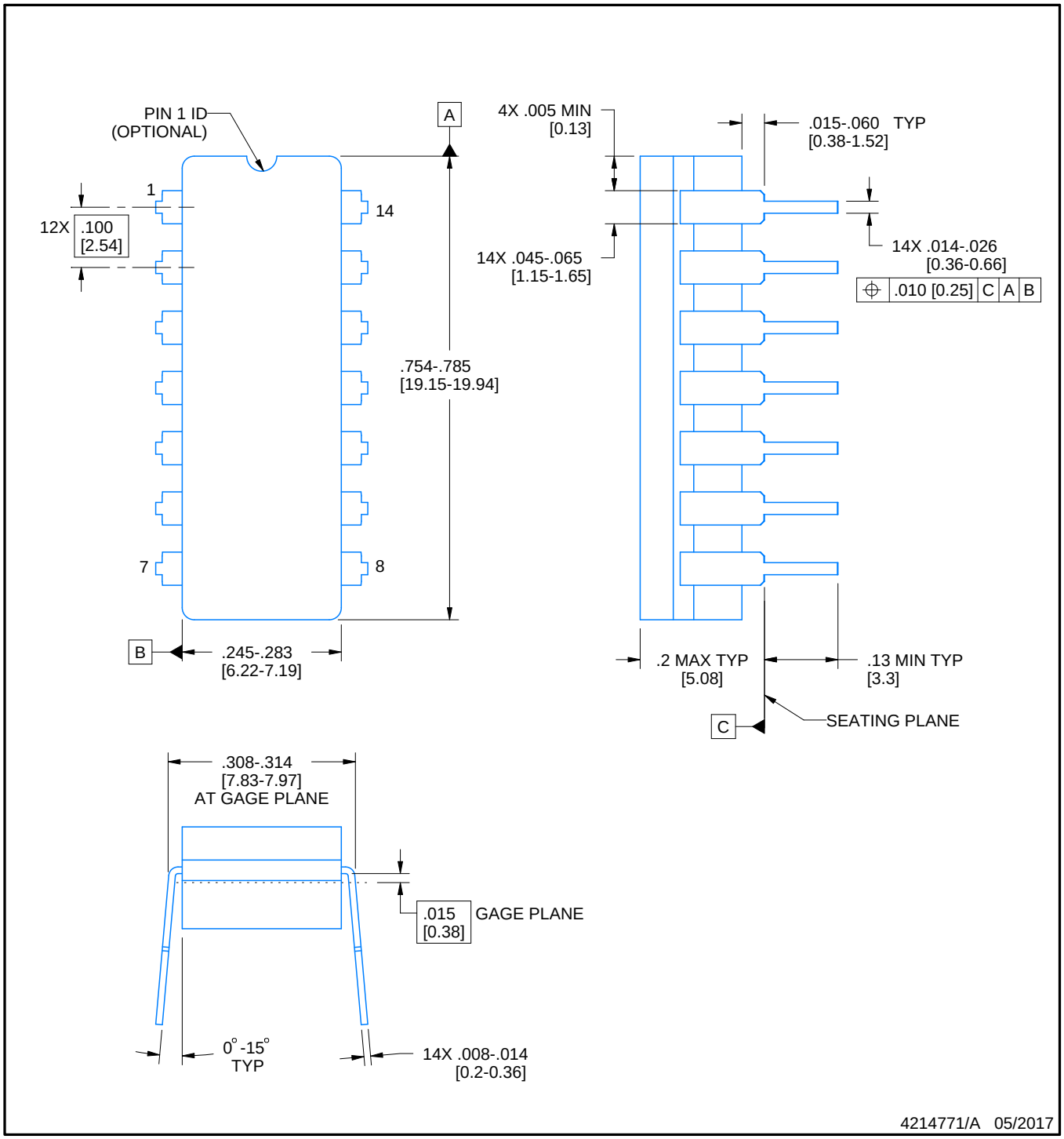

NOTES:

1. All controlling linear dimensions are in inches. Dimensions in brackets are in millimeters. Any dimension in brackets or parenthesis are for reference only. Dimensioning and tolerancing per ASME Y14.5M.
2. This drawing is subject to change without notice.
3. This package is hermitically sealed with a ceramic lid using glass frit.
4. Index point is provided on cap for terminal identification only and on press ceramic glass frit seal only.
5. Falls within MIL-STD-1835 and GDIP1-T14.

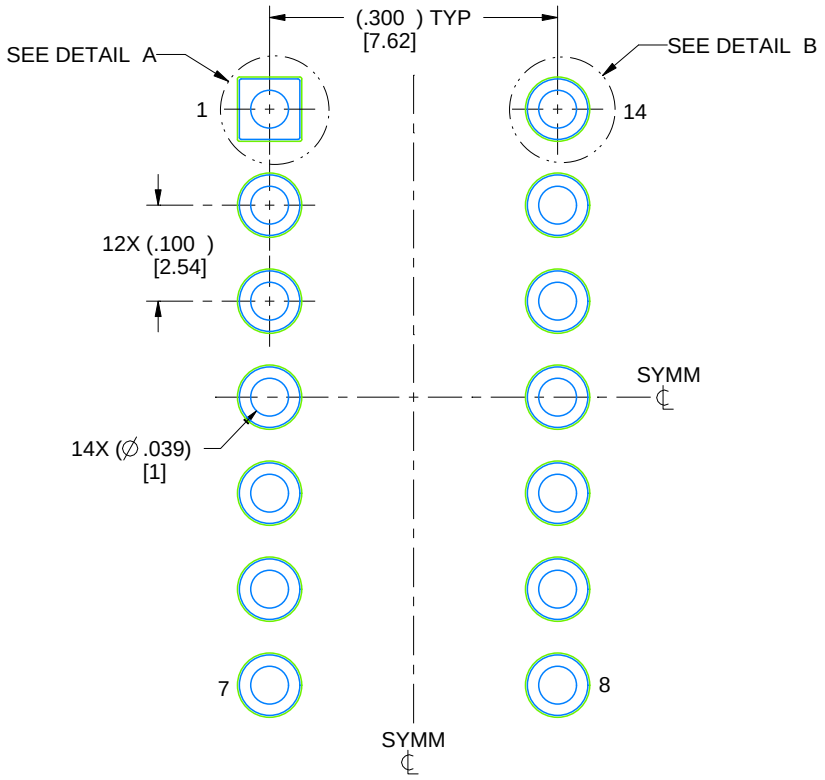

LAND PATTERN EXAMPLE
NON-SOLDER MASK DEFINED
SCALE: 5X

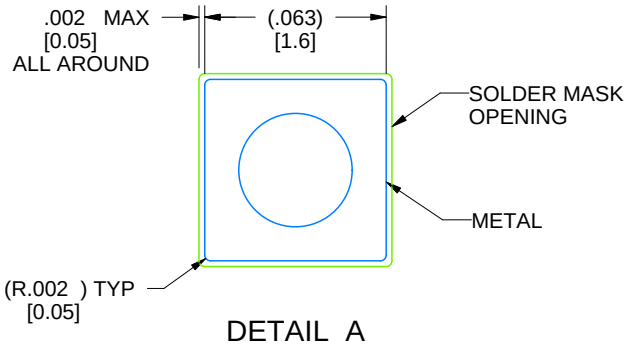

DETAIL A
SCALE: 15X

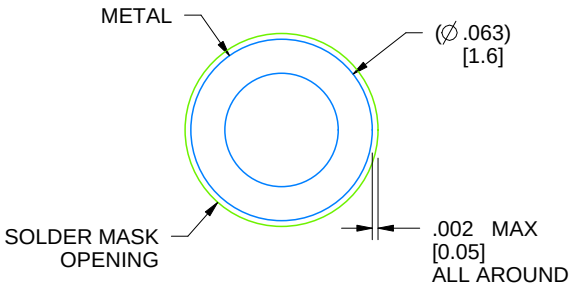

DETAIL B
13X, SCALE: 15X

4214771/A 05/2017

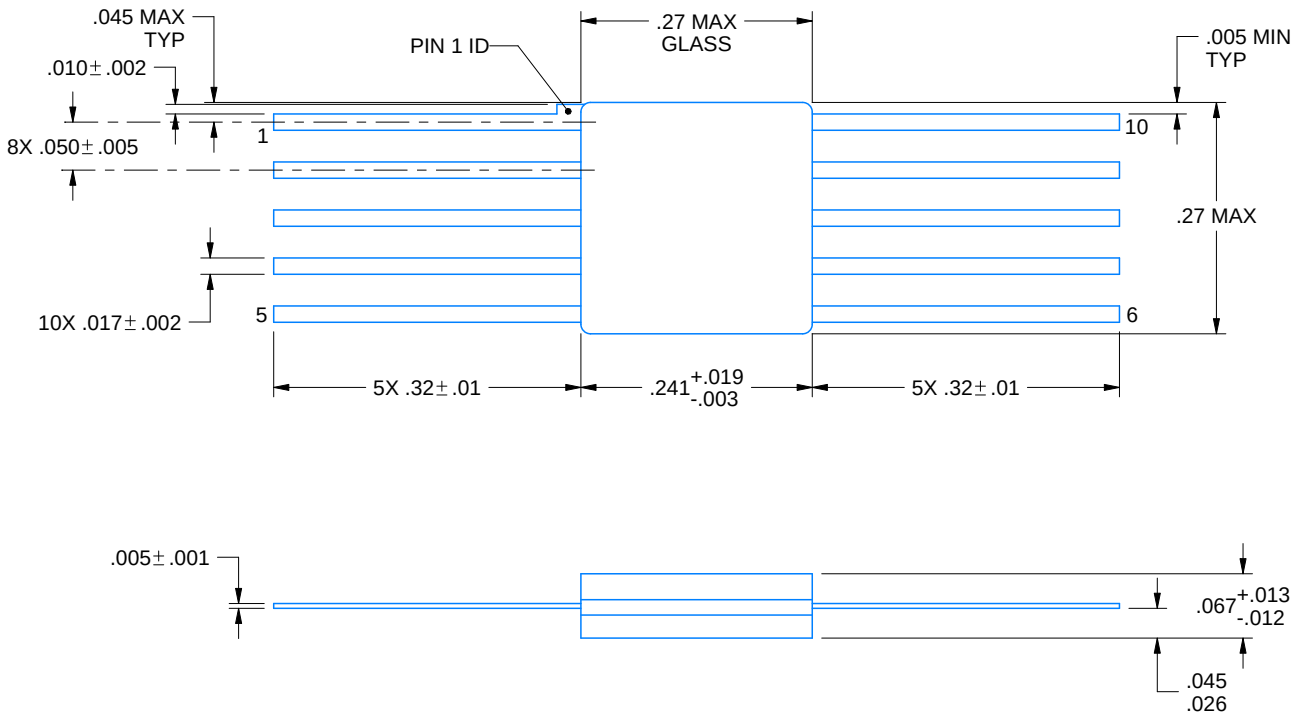

4215191/A 06/2021

NOTES:

1. All linear dimensions are in inches. Any dimensions in parenthesis are for reference only. Dimensioning and tolerancing per ASME Y14.5M.
2. This drawing is subject to change without notice.

IMPORTANT NOTICE AND DISCLAIMER

TI PROVIDES TECHNICAL AND RELIABILITY DATA (INCLUDING DATA SHEETS), DESIGN RESOURCES (INCLUDING REFERENCE DESIGNS), APPLICATION OR OTHER DESIGN ADVICE, WEB TOOLS, SAFETY INFORMATION, AND OTHER RESOURCES “AS IS” AND WITH ALL FAULTS, AND DISCLAIMS ALL WARRANTIES, EXPRESS AND IMPLIED, INCLUDING WITHOUT LIMITATION ANY IMPLIED WARRANTIES OF MERCHANTABILITY, FITNESS FOR A PARTICULAR PURPOSE OR NON-INFRINGEMENT OF THIRD PARTY INTELLECTUAL PROPERTY RIGHTS.

These resources are intended for skilled developers designing with TI products. You are solely responsible for (1) selecting the appropriate TI products for your application, (2) designing, validating and testing your application, and (3) ensuring your application meets applicable standards, and any other safety, security, regulatory or other requirements.

These resources are subject to change without notice. TI grants you permission to use these resources only for development of an application that uses the TI products described in the resource. Other reproduction and display of these resources is prohibited. No license is granted to any other TI intellectual property right or to any third party intellectual property right. TI disclaims responsibility for, and you will fully indemnify TI and its representatives against, any claims, damages, costs, losses, and liabilities arising out of your use of these resources.

TI’s products are provided subject to TI’s Terms of Sale or other applicable terms available either on ti.com or provided in conjunction with such TI products. TI’s provision of these resources does not expand or otherwise alter TI’s applicable warranties or warranty disclaimers for TI products.

TI objects to and rejects any additional or different terms you may have proposed.

Mailing Address: Texas Instruments, Post Office Box 655303, Dallas, Texas 75265
Copyright © 2022, Texas Instruments Incorporated