# LMx31x Precision Voltage-to-Frequency Converters

## 1 Features

- Ensured Linearity 0.01% Maximum
- Improved Performance in Existing Voltage-to-Frequency Conversion Applications
- Split or Single-Supply Operation
- Operates on Single 5-V Supply
- Pulse Output Compatible With All Logic Forms
- Excellent Temperature Stability: ±50 ppm/°C Maximum
- Low Power Consumption: 15 mW Typical at 5 V
- Wide Dynamic Range, 100 dB Minimum at 10-kHz Full Scale Frequency
- Wide Range of Full Scale Frequency: 1 Hz to 100 kHz
- Low-Cost

## 2 Applications

- Voltage to Frequency Conversions
- Frequency to Voltage Conversions
- Remote-Sensor Monitoring
- Tachometers

## 3 Description

The LMx31 family of voltage-to-frequency converters are ideally suited for use in simple low-cost circuits for analog-to-digital conversion, precision frequency-to-voltage conversion, long-term integration, linear frequency modulation or demodulation, and many other functions. The output when used as a voltage-to-frequency converter is a pulse train at a frequency precisely proportional to the applied input voltage. Thus, it provides all the inherent advantages of the voltage-to-frequency conversion techniques, and is easy to apply in all standard voltage-to-frequency converter applications.

**Device Information(1)**

| PART NUMBER | PACKAGE | BODY SIZE (NOM) |
|---|---|---|
| LM231 | PDIP (8) | 9.81 mm × 6.35 mm |
| LM331 | | |

(1) For all available packages, see the orderable addendum at the end of the data sheet.

**Schematic Diagram**

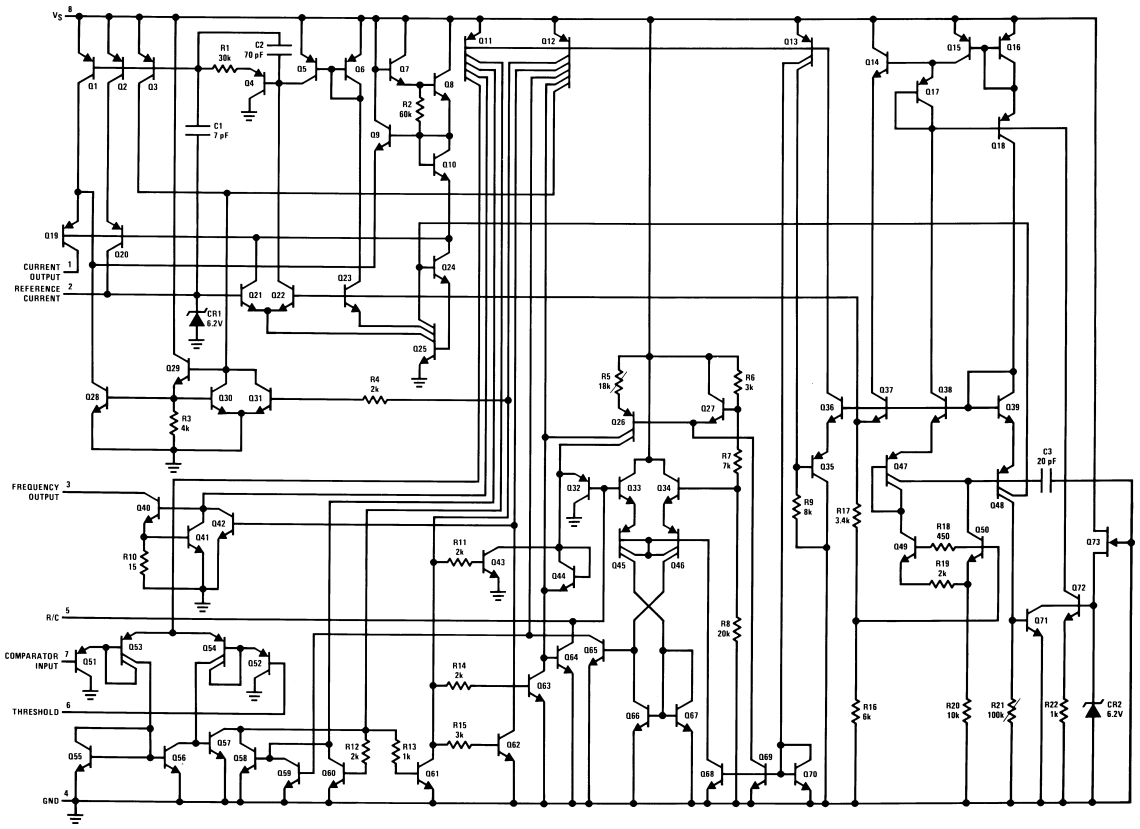


An IMPORTANT NOTICE at the end of this data sheet addresses availability, warranty, changes, use in safety-critical applications, intellectual property matters and other important disclaimers. PRODUCTION DATA.

## Table of Contents

**1 Features** ... 1
**2 Applications** ... 1
**3 Description** ... 1
**4 Revision History** ... 2
**5 Description continued** ... 3
**6 Pin Configuration and Functions** ... 4
**7 Specifications** ... 4
7.1 Absolute Maximum Ratings ... 4
7.2 ESD Ratings ... 4
7.3 Recommended Operating Conditions ... 5
7.4 Thermal Information ... 5
7.5 Electrical Characteristics ... 5
7.6 Dissipation Ratings ... 6
7.7 Typical Characteristics ... 7
**8 Detailed Description** ... 9
8.1 Overview ... 9
8.2 Functional Block Diagram ... 9
8.3 Feature Description ... 10
8.4 Device Functional Modes ... 10
**9 Application and Implementation** ... 11
9.1 Application Information ... 11
9.2 Typical Applications ... 12
9.3 System Examples ... 15
**10 Power Supply Recommendations** ... 18
**11 Layout** ... 18
11.1 Layout Guidelines ... 18
11.2 Layout Example ... 18
**12 Device and Documentation Support** ... 19
12.1 Related Links ... 19
12.2 Community Resources ... 19
12.3 Trademarks ... 19
12.4 Electrostatic Discharge Caution ... 19
12.5 Glossary ... 19
**13 Mechanical, Packaging, and Orderable Information** ... 19

## 4 Revision History

NOTE: Page numbers for previous revisions may differ from page numbers in the current version.

| Changes from Revision B (March 2013) to Revision C | Page |
|---|---|
| • Added *Pin Configuration and Functions* section, *ESD Ratings* table, *Feature Description* section, *Device Functional Modes*, *Application and Implementation* section, *Power Supply Recommendations* section, *Layout* section, *Device and Documentation Support* section, and *Mechanical, Packaging, and Orderable Information* section | 1 |

| Changes from Revision A (March 2013) to Revision B | Page |
|---|---|
| • Changed layout of National Data Sheet to TI format | 1 |


Copyright © 1999–2015, Texas Instruments Incorporated

## 5 Description continued

Further, the LMx31A attain a new high level of accuracy versus temperature which could only be attained with expensive voltage-to-frequency modules. Additionally the LMx31 are ideally suited for use in digital systems at low power supply voltages and can provide low-cost analog-to-digital conversion in microprocessor-controlled systems. And, the frequency from a battery-powered voltage-to-frequency converter can be easily channeled through a simple photo isolator to provide isolation against high common-mode levels.

The LMx31 uses a new temperature-compensated band-gap reference circuit, to provide excellent accuracy over the full operating temperature range, at power supplies as low as 4 V. The precision timer circuit has low bias currents without degrading the quick response necessary for 100-kHz voltage-to-frequency conversion. And the output are capable of driving 3 TTL loads, or a high-voltage output up to 40 V, yet is short-circuit-proof against $V_{CC}$.

Copyright © 1999–2015, Texas Instruments Incorporated

# 6 Pin Configuration and Functions

**P Package**
**8-Pin PDIP**
**Top View**

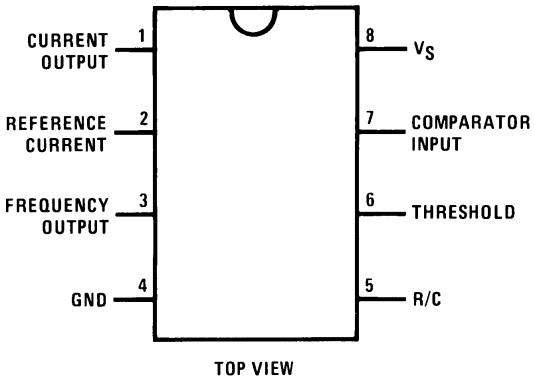


**Pin Functions**

| PIN | | I/O | DESCRIPTION |
|---|---|---|---|
| NAME | NO. | | |
| IOUT | 1 | O | Current Output |
| IREF | 2 | I | Reference Current |
| FOUT | 3 | O | Frequency Output. This output is an open-collector output and requires a pullup resistor. |
| GND | 4 | G | Ground |
| RC | 5 | I | R-C filter input |
| THRESH | 6 | I | Threshold input |
| COMPIN | 7 | I | Comparator Input |
| VS | 8 | P | Supply Voltage |

# 7 Specifications

## 7.1 Absolute Maximum Ratings(1)(2)(3)

| | | MIN | MAX | UNIT |
|---|---|---|---|---|
| Supply Voltage, $V_S$ | | | 40 | V |
| Output Short Circuit to Ground | | Continuous | | |
| Output Short Circuit to $V_{CC}$ | | Continuous | | |
| Input Voltage | | −0.2 | $+V_S$ | V |
| Lead Temperature (Soldering, 10 sec.) | PDIP | | 260 | °C |

(1) Stresses beyond those listed under *Absolute Maximum Ratings* may cause permanent damage to the device. These are stress ratings only, which do not imply functional operation of the device at these or any other conditions beyond those indicated under *Recommended Operating Conditions*. Exposure to absolute-maximum-rated conditions for extended periods may affect device reliability.
(2) All voltages are measured with respect to GND = 0 V, unless otherwise noted.
(3) If Military/Aerospace specified devices are required, please contact the TI Sales Office/Distributors for availability and specifications.

## 7.2 ESD Ratings

| | | | VALUE | UNIT |
|---|---|---|---|---|
| $V_{(ESD)}$ | Electrostatic discharge | Human body model (HBM), per ANSI/ESDA/JEDEC JS-001(1)(2) | ±500 | V |

(1) JEDEC document JEP155 states that 500-V HBM allows safe manufacturing with a standard ESD control process.
(2) Human body model, 100 pF discharged through a 1.5-kΩ resistor.


Copyright © 1999–2015, Texas Instruments Incorporated

## 7.3 Recommended Operating Conditions

| | | MIN | MAX | UNIT |
|---|---|---|---|---|
| Operating Ambient Temperature | LM231, LM231A | −25 | 85 | °C |
| | LM331, LM331A | 0 | 70 | °C |
| Supply Voltage, $V_S$ (1) | | 4 | 40 | V |

(1) All voltages are measured with respect to GND = 0 V, unless otherwise noted.

## 7.4 Thermal Information

| THERMAL METRIC (1) | | LM312, LM331 P (PDIP) 8 PINS | UNIT |
|---|---|---|---|
| $R_{\theta JA}$ | Junction-to-ambient thermal resistance | 100 | °C/W |

(1) For more information about traditional and new thermal metrics, see the *Semiconductor and IC Package Thermal Metrics* application report, SPRA953.

## 7.5 Electrical Characteristics

All specifications apply in the circuit of Figure 16, with 4.0 V ≤ $V_S$ ≤ 40 V, $T_A$ = 25°C, unless otherwise specified.

| PARAMETER | | TEST CONDITIONS | MIN | TYP | MAX | UNIT |
|---|---|---|---|---|---|---|
| VFC Non-Linearity (1) | | 4.5 V ≤ $V_S$ ≤ 20 V | | ±0.003 | ±0.01 | % Full-Scale |
| | | $T_{MIN}$ ≤ $T_A$ ≤ $T_{MAX}$ | | ±0.006 | ±0.02 | % Full-Scale |
| VFC Non-Linearity in Circuit of Figure 14 | | $V_S$ = 15 V, f = 10 Hz to 11 kHz | | ±0.024 | ±0.14 | %Full-Scale |
| Conversion Accuracy Scale Factor (Gain) | LM231, LM231A | $V_{IN}$ = −10 V, $R_S$ = 14 kΩ | 0.95 | 1 | 1.05 | kHz/V |
| | LM331, LM331A | | 0.9 | 1 | 1.1 | kHz/V |
| Temperature Stability of Gain | LMx31 | $T_{MIN}$ ≤ $T_A$ ≤ $T_{MAX}$<br>4.5 V ≤ $V_S$ ≤ 20 V | | ±30 | ±150 | ppm/°C |
| | LMx31A | | | ±20 | ±50 | ppm/°C |
| Change of Gain with $V_S$ | | 4.5 V ≤ $V_S$ ≤ 10 V | | 0.01 | 0.1 | %/V |
| | | 10 V ≤ $V_S$ ≤ 40 V | | 0.006 | 0.06 | %/V |
| Rated Full-Scale Frequency | | $V_{IN}$ = −10 V | 10.0 | | | kHz |
| Gain Stability vs. Time (1000 Hours) | | $T_{MIN}$ ≤ $T_A$ ≤ $T_{MAX}$ | | ±0.02 | | % Full-Scale |
| Over Range (Beyond Full-Scale) Frequency | | $V_{IN}$ = −11 V | 10% | | | |
| **INPUT COMPARATOR** | | | | | | |
| Offset Voltage | | | | ±3 | ±10 | mV |
| LM231/LM331 | | $T_{MIN}$ ≤ $T_A$ ≤ $T_{MAX}$ | | ±4 | ±14 | mV |
| LM231A/LM331A | | $T_{MIN}$ ≤ $T_A$ ≤ $T_{MAX}$ | | ±3 | ±10 | mV |
| Bias Current | | | | −80 | −300 | nA |
| Offset Current | | | | ±8 | ±100 | nA |
| Common-Mode Range | | $T_{MIN}$ ≤ $T_A$ ≤ $T_{MAX}$ | −0.2 | | $V_{CC}$ − 2 | V |
| **TIMER** | | | | | | |
| Timer Threshold Voltage, Pin 5 | | | 0.63 × $V_S$ | 0.667 × $V_S$ | 0.7 × $V_S$ | |
| Input Bias Current, Pin 5 | | $V_S$ = 15 V | | | | |
| All Devices | | 0V ≤ $V_{PIN\ 5}$ ≤ 9.9 V | | ±10 | ±100 | nA |
| LM231/LM331 | | $V_{PIN\ 5}$ = 10 V | | 200 | 1000 | nA |
| LM231A/LM331A | | $V_{PIN\ 5}$ = 10 V | | 200 | 500 | nA |
| $V_{SAT\ PIN\ 5}$ (Reset) | | I = 5 mA | | 0.22 | 0.5 | V |

(1) Non-linearity is defined as the deviation of $f_{OUT}$ from $V_{IN}$ × (10 kHz/−10 $V_{DC}$) when the circuit has been trimmed for zero error at 10 Hz and at 10 kHz, over the frequency range 1 Hz to 11 kHz. For the timing capacitor, $C_T$, use NPO ceramic, Teflon®, or polystyrene.

Copyright © 1999–2015, Texas Instruments Incorporated

## Electrical Characteristics (continued)

All specifications apply in the circuit of Figure 16, with 4.0 V ≤ $V_S$ ≤ 40 V, $T_A$ = 25°C, unless otherwise specified.

| PARAMETER | | TEST CONDITIONS | MIN | TYP | MAX | UNIT |
|---|---|---|---|---|---|---|
| **CURRENT SOURCE (PIN 1)** | | | | | | |
| Output Current | LM231, LM231A | $R_S$ = 14 kΩ, $V_{PIN\ 1}$ = 0 | 126 | 135 | 144 | µA |
| | LM331, LM331A | | 116 | 136 | 156 | µA |
| Change with Voltage | | 0V ≤ $V_{PIN\ 1}$ ≤ 10 V | | 0.2 | 1 | µA |
| Current Source OFF Leakage | LM231, LM231A, LM331, LM331A | | | 0.02 | 10 | nA |
| | All Devices | $T_A = T_{MAX}$ | | 2 | 50 | nA |
| Operating Range of Current (Typical) | | | | (10 to 500) | | µA |
| **REFERENCE VOLTAGE (PIN 2)** | | | | | | |
| LM231, LM231A | | | 1.76 | 1.89 | 2.02 | $V_{DC}$ |
| LM331, LM331A | | | 1.7 | 1.89 | 2.08 | $V_{DC}$ |
| Stability vs. Temperature | | | | ±60 | | ppm/°C |
| Stability vs. Time, 1000 Hours | | | | ±0.1% | | |
| **LOGIC OUTPUT (PIN 3)** | | | | | | |
| $V_{SAT}$ | | I = 5 mA | | 0.15 | 0.5 | V |
| | | I = 3.2 mA (2 TTL Loads), $T_{MIN} \le T_A \le T_{MAX}$ | | 0.1 | 0.4 | V |
| OFF Leakage | | | | ±0.05 | 1 | µA |
| **SUPPLY CURRENT** | | | | | | |
| LM231, LM231A | | $V_S$ = 5 V | 2 | 3 | 4 | mA |
| | | $V_S$ = 40 V | 2.5 | 4 | 6 | mA |
| LM331, LM331A | | $V_S$ = 5 V | 1.5 | 3 | 6 | mA |
| | | $V_S$ = 40 V | 2 | 4 | 8 | mA |

## 7.6 Dissipation Ratings

| | VALUE | UNIT |
|---|---|---|
| Package Dissipation at 25°C (1) | 1.25 | W |

(1) The absolute maximum junction temperature ($T_J$max) for this device is 150°C. The maximum allowable power dissipation is dictated by $T_J$max, the junction-to-ambient thermal resistance ($\theta_{JA}$), and the ambient temperature $T_A$, and can be calculated using the formula $P_D$max = ($T_J$max - $T_A$) / $\theta_{JA}$. The values for maximum power dissipation will be reached only when the device is operated in a severe fault condition (e.g., when input or output pins are driven beyond the power supply voltages, or the power supply polarity is reversed). Obviously, such conditions should always be avoided.


Copyright © 1999–2015, Texas Instruments Incorporated

## 7.7 Typical Characteristics

(All electrical characteristics apply for the circuit of Figure 16, unless otherwise noted.)

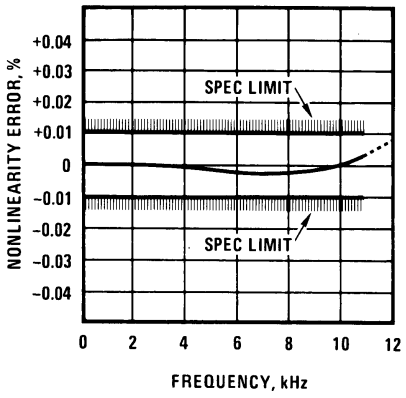


**Figure 1. Non-Linearity Error as Precision V-to-F Converter (Figure 16)**

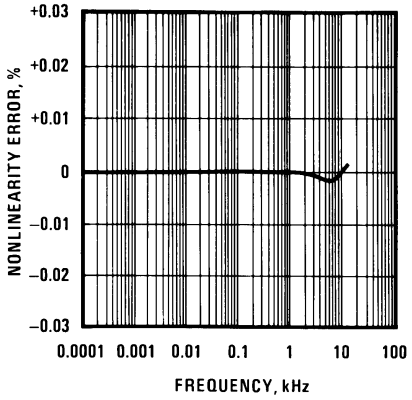


**Figure 2. Non-Linearity Error**

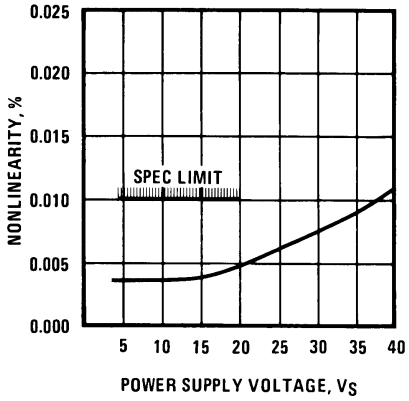


**Figure 3. Non-Linearity Error vs. Power Supply Voltage**

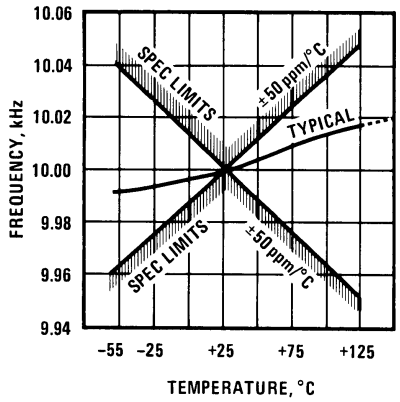


**Figure 4. Frequency vs. Temperature**

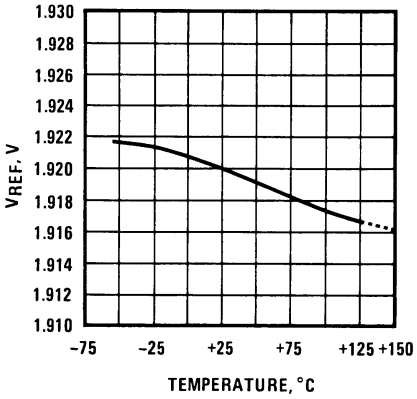


**Figure 5. $V_{REF}$ vs. Temperature**

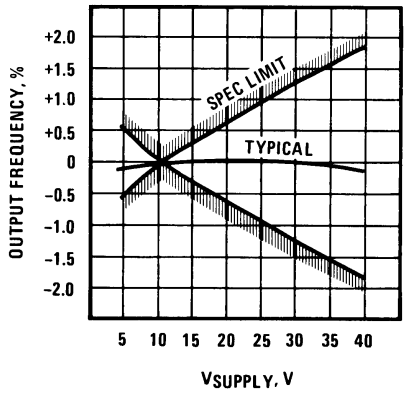


**Figure 6. Output Frequency vs. $V_{SUPPLY}$**

## Typical Characteristics (continued)

(All electrical characteristics apply for the circuit of Figure 16, unless otherwise noted.)

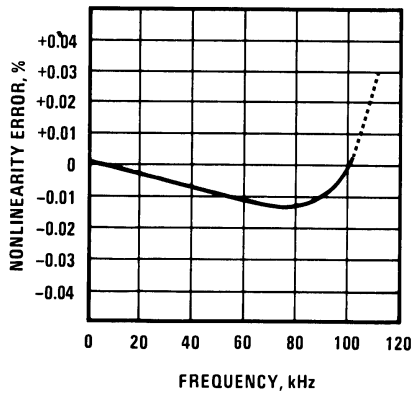


**Figure 7. 100 kHz Non-Linearity Error (Figure 17)**

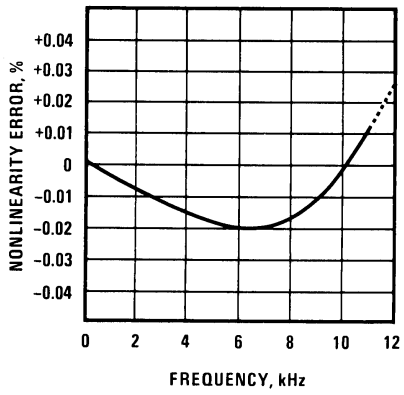


**Figure 8. Non-Linearity Error (Figure 14)**

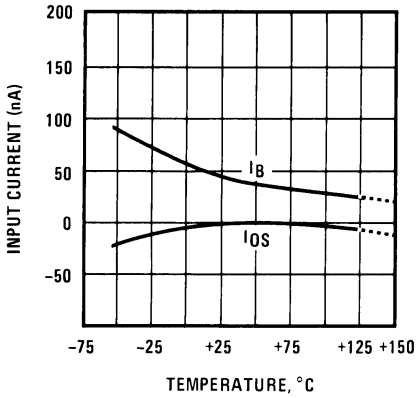


**Figure 9. Input Current (Pins 6,7) vs. Temperature**

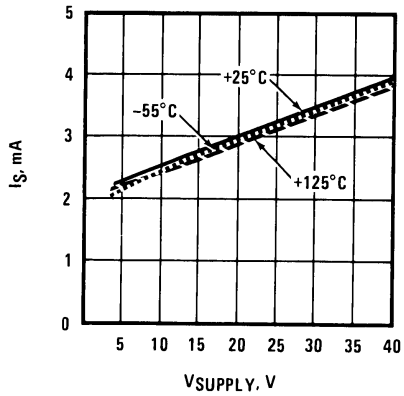


**Figure 10. Power Drain vs. $V_{SUPPLY}$**

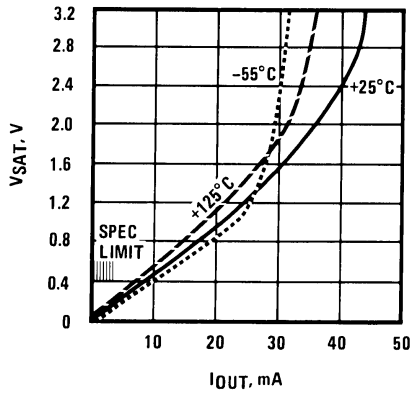


**Figure 11. Output Saturation Voltage vs. $I_{OUT}$ (Pin 3)**

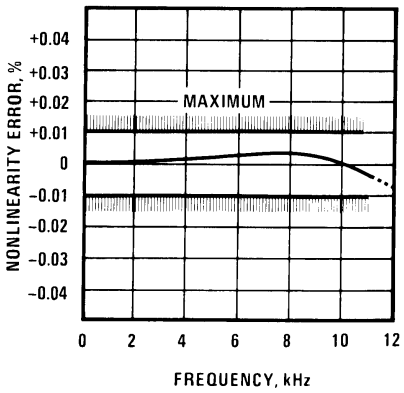


**Figure 12. Non-Linearity Error, Precision F-to-V Converter (Figure 19)**


Copyright © 1999–2015, Texas Instruments Incorporated

# 8 Detailed Description

## 8.1 Overview

### 8.1.1 Detail of Operation, Functional Block Diagram

The *Functional Block Diagram* shows a band gap reference which provides a stable 1.9-$V_{DC}$ output. This 1.9 $V_{DC}$ is well regulated over a $V_S$ range of 3.9 V to 40 V. It also has a flat, low temperature coefficient, and typically changes less than ½% over a 100°C temperature change.

The current pump circuit forces the voltage at pin 2 to be at 1.9 V, and causes a current i = 1.90 V/$R_S$ to flow. For $R_S$=14 k, i=135 µA. The precision current reflector provides a current equal to i to the current switch. The current switch switches the current to pin 1 or to ground, depending upon the state of the R-S flip-flop.

The timing function consists of an R-S flip-flop and a timer comparator connected to the external $R_tC_t$ network. When the input comparator detects a voltage at pin 7 higher than pin 6, it sets the R-S flip-flop which turns ON the current switch and the output driver transistor. When the voltage at pin 5 rises to ⅔ $V_{CC}$, the timer comparator causes the R-S flip-flop to reset. The reset transistor is then turned ON and the current switch is turned OFF.

However, if the input comparator still detects the voltage on pin 7 as higher than pin 6 when pin 5 crosses ⅔ $V_{CC}$, the flip-flop will not be reset, and the current at pin 1 will continue to flow, trying to make the voltage at pin 6 higher than pin 7. This condition will usually apply under start-up conditions or in the case of an overload voltage at signal input. During this sort of overload the output frequency will be 0. As soon as the signal is restored to the working range, the output frequency will be resumed.

## 8.2 Functional Block Diagram

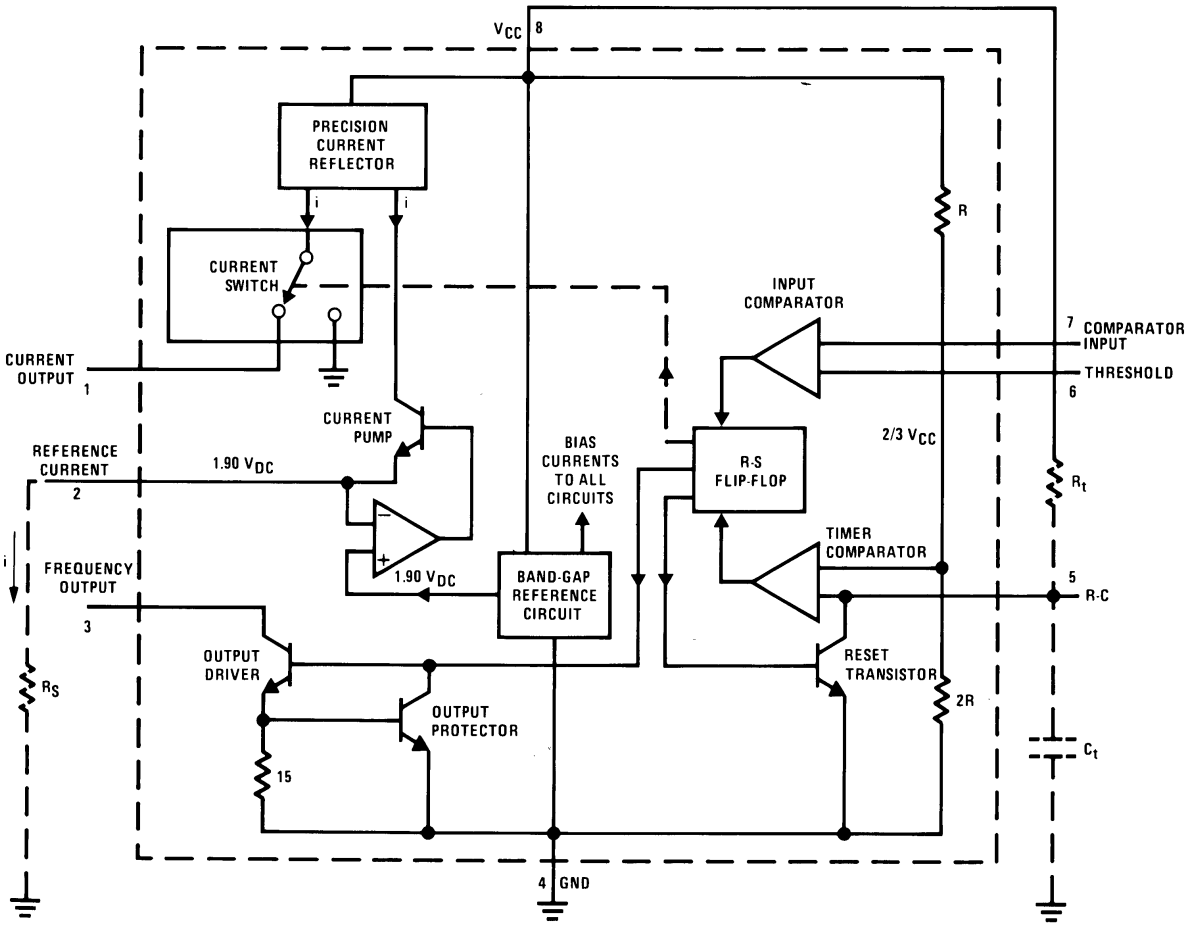

## 8.3 Feature Description

The LMx31 operate over a wide voltage range of 4 V to 40 V.

The voltage at pin 2 is regulated at 1.90 $V_{DC}$ for all values of i between 10 µA to 500 µA. It can be used as a voltage reference for other components, but take care to ensure that current is not taken from it which could reduce the accuracy of the converter.

## 8.4 Device Functional Modes

The output driver transistor acts to saturate pin 3 with an ON resistance of about 50 Ω. In case of overvoltage, the output current is actively limited to less than 50 mA.

If the voltage on pin 7 is higher than pin 6 when pin 5 crosses ⅔ $V_{CC}$, the LMx31 internal flip-flop will not be reset, and the current at pin 1 will continue to flow, trying to make the voltage at pin 6 higher than pin 7. This condition will usually apply under start-up conditions or in the case of an overload voltage at signal input. During this sort of overload the output frequency will be 0. As soon as the signal is restored to the working range, the output frequency will be resumed.


Copyright © 1999–2015, Texas Instruments Incorporated

# 9 Application and Implementation

**NOTE**

Information in the following applications sections is not part of the TI component specification, and TI does not warrant its accuracy or completeness. TI's customers are responsible for determining suitability of components for their purposes. Customers should validate and test their design implementation to confirm system functionality.

## 9.1 Application Information

### 9.1.1 Simplified Voltage-to-Frequency Converter

The operation of these blocks is best understood by going through the operating cycle of the basic V-to-F converter, Figure 13, which consists of the simplified block diagram of the LMx31 and the various resistors and capacitors connected to it.

The voltage comparator compares a positive input voltage, V1, at pin 7 to the voltage, $V_x$, at pin 6. If V1 is greater, the comparator will trigger the 1-shot timer. The output of the timer will turn ON both the frequency output transistor and the switched current source for a period t = 1.1 $R_tC_t$. During this period, the current i will flow out of the switched current source and provide a fixed amount of charge, Q = i × t, into the capacitor, $C_L$. This will normally charge $V_x$ up to a higher level than V1. At the end of the timing period, the current i will turn OFF, and the timer will reset itself.

Now there is no current flowing from pin 1, and the capacitor $C_L$ will be gradually discharged by $R_L$ until $V_x$ falls to the level of V1. Then the comparator will trigger the timer and start another cycle.

The current flowing into $C_L$ is exactly $I_{AVE} = i \times (1.1 \times R_tC_t) \times f$, and the current flowing out of $C_L$ is exactly $V_x/R_L \simeq V_{IN}/R_L$. If $V_{IN}$ is doubled, the frequency will double to maintain this balance. Even a simple V-to-F converter can provide a frequency precisely proportional to its input voltage over a wide range of frequencies.

### 9.1.2 Principles of Operation

The LMx31 are monolithic circuits designed for accuracy and versatile operation when applied as voltage-to-frequency (V-to-F) converters or as frequency-to-voltage (F-to-V) converters. A simplified block diagram of the LMx31 is shown in Figure 13 and consists of a switched current source, input comparator, and 1-shot timer.

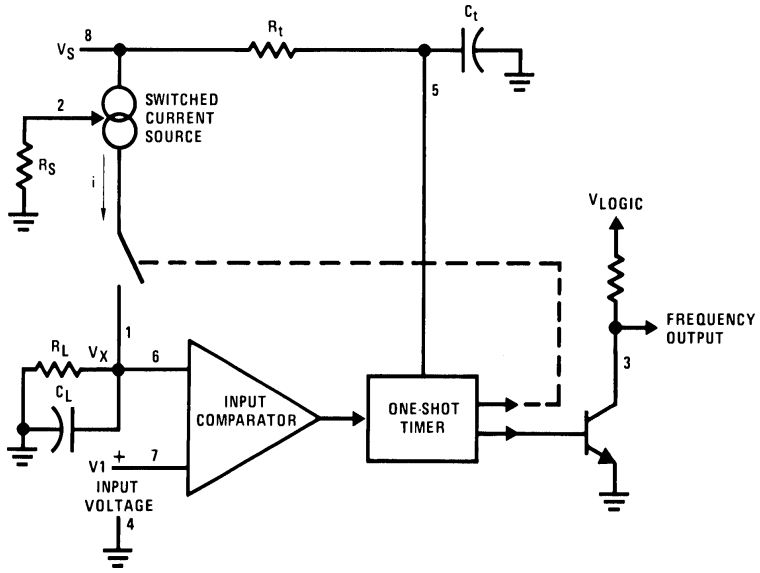


**Figure 13. Simplified Block Diagram of Stand-Alone Voltage-to-Frequency Converter and External Components**

## 9.2 Typical Applications

### 9.2.1 Basic Voltage-to-Frequency Converter

The simple stand-alone V-to-F converter shown in Figure 14 includes all the basic circuitry of Figure 13 plus a few components for improved performance.

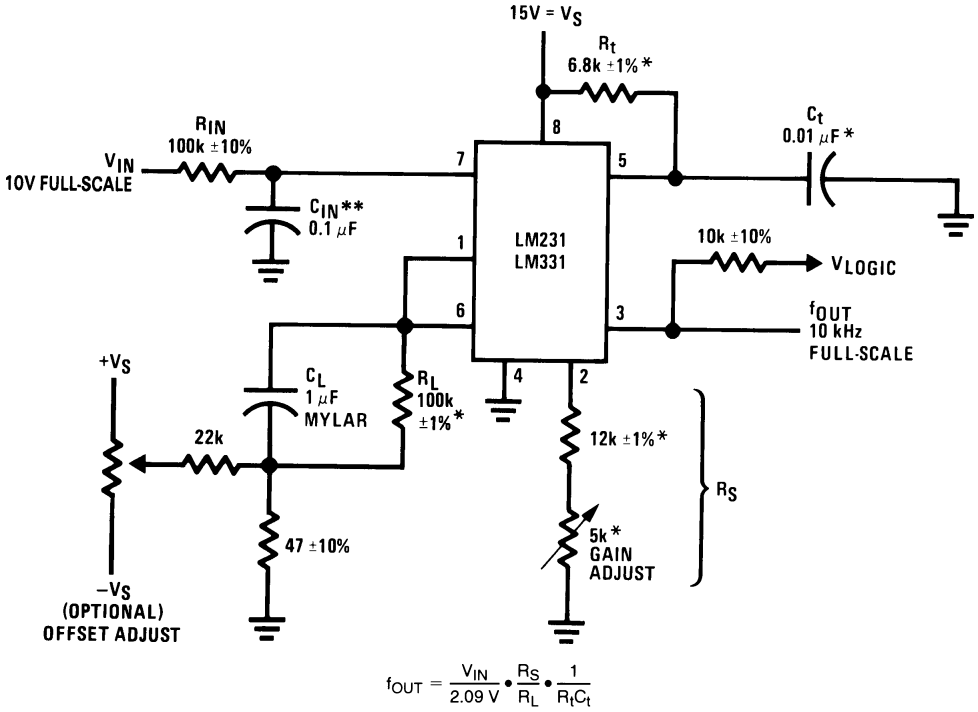


*Use stable components with low temperature coefficients. See *Application Information*.
**0.1 μF or 1 μF, See *Typical Applications*.

**Figure 14. Simple Stand-Alone V-to-F Converter with ±0.03% Typical Linearity (f = 10 Hz to 11 kHz)**

#### *9.2.1.1 Design Requirements*

For this example, the system requirements are 0.05% linearity over an output frequency range of 10 Hz to 4 kHz with an input voltage range of 25 mV to 12.5 V. The available supply voltage is 15.0 V.

#### *9.2.1.2 Detailed Design Procedure*

A capacitor $C_{IN}$ is added from pin 7 to ground to act as a filter for $V_{IN}$, use of a 0.1 μF is appropriate for this application. A value of 0.01 μF to 0.1 μF will be adequate in most cases; however, in cases where better filtering is required, a 1-μF capacitor can be used. When the RC time constants are matched at pin 6 and pin 7, a voltage step at $V_{IN}$ will cause a step change in $f_{OUT}$. If $C_{IN}$ is much less than $C_L$, a step at $V_{IN}$ may cause $f_{OUT}$ to stop momentarily.

Next, we cancel the comparator bias current by setting $R_{IN}$ to 100 kΩ to match $R_L$. This will help to minimize any frequency offset.

For best results, all the components should be stable low-temperature-coefficient components, such as metal-film resistors. The capacitor should have low dielectric absorption; depending on the temperature characteristics desired, NPO ceramic, polystyrene, Teflon or polypropylene are best suited.

The resistance $R_S$ at pin 2 is made up of a 12-kΩ fixed resistor plus a 5-kΩ (cermet, preferably) gain adjust rheostat. The function of this adjustment is to trim out the gain tolerance of the LMx31, and the tolerance of $R_t$, $R_L$ and $C_t$.


Copyright © 1999–2015, Texas Instruments Incorporated

## Typical Applications (continued)

A 47-Ω resistor in series with the 1-μF capacitor (CL) provides hysteresis, which helps the input comparator provide the excellent linearity.

This results in the transfer function of $f_{OUT} = (V_{IN} / 2.09\ V) \times (R_S / R_L) \times (1 / R_tC_t)$.

### *9.2.1.3 Application Curve*

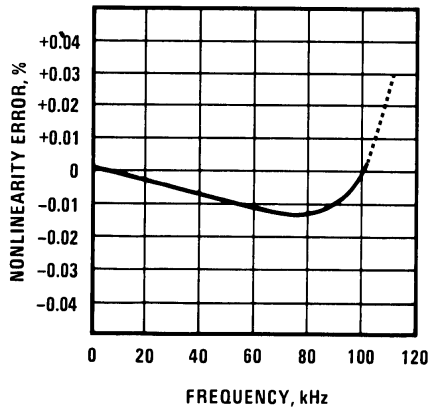


**Figure 15. Output Non-Linearity Error vs. Frequency**

## Typical Applications (continued)

### 9.2.2 Precision V-To-F Converter

In this circuit, integration is performed by using a conventional operational amplifier and feedback capacitor, $C_F$. When the integrator's output crosses the nominal threshold level at pin 6 of the LMx31, the timing cycle is initiated.

The average current fed into the summing point of the op-amp (pin 2) is i × (1.1 $R_tC_t$) × f which is perfectly balanced with $-V_{IN}/R_{IN}$. In this circuit, the voltage offset of the LMx31 input comparator does not affect the offset or accuracy of the V-to-F converter as it does in the stand-alone V-to-F converter; nor does the LM231/331 bias current or offset current. Instead, the offset voltage and offset current of the operational amplifier are the only limits on how small the signal can be accurately converted. Since op-amps with voltage offset well below 1 mV and offset currents well below 2 nA are available at low cost, this circuit is recommended for best accuracy for small signals. This circuit also responds immediately to any change of input signal (which a stand-alone circuit does not) so that the output frequency will be an accurate representation of $V_{IN}$, as quickly as the spacing of the 2 output pulses can be measured.

In the precision mode, excellent linearity is obtained because the current source (pin 1) is always at ground potential and that voltage does not vary with $V_{IN}$ or $f_{OUT}$. (In the stand-alone V-to-F converter, a major cause of non-linearity is the output impedance at pin 1 which causes i to change as a function of $V_{IN}$).

The circuit of Figure 17 operates in the same way as Figure 16, but with the necessary changes for high-speed operation.

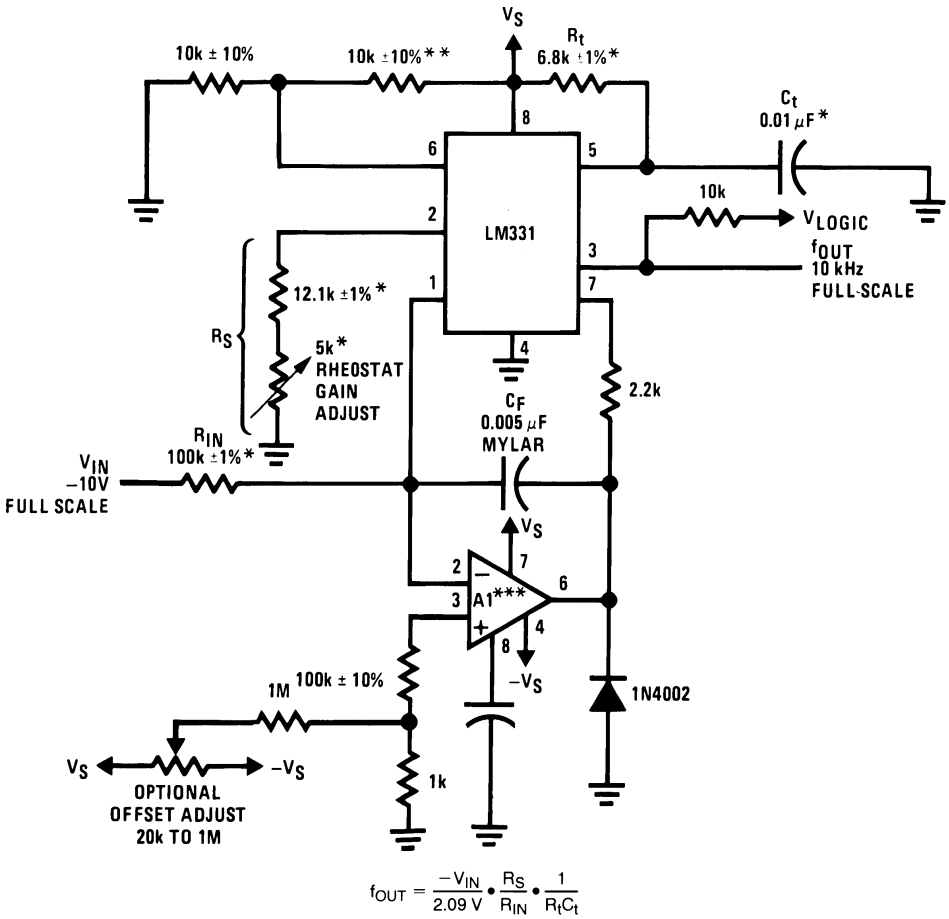


*Use stable components with low temperature coefficients.
**This resistor can be 5 kΩ or 10 kΩ for $V_S$ = 8 V to 22 V, but must be 10 kΩ for $V_S$ = 4.5 V to 8 V.
***Use low offset voltage and low offset current op-amps for A1: recommended type LF411A

**Figure 16. Standard Test Circuit and Applications Circuit, Precision Voltage-to-Frequency Converter**


Copyright © 1999–2015, Texas Instruments Incorporated

## 9.3 System Examples

### 9.3.1 F-to-V Converters

In these applications, a pulse input at $f_{IN}$ is differentiated by a C-R network and the negative-going edge at pin 6 causes the input comparator to trigger the timer circuit. Just as with a V-to-F converter, the average current flowing out of pin 1 is $I_{AVERAGE} = i \times (1.1\ R_tC_t) \times f$.

In the simple circuit of Figure 18, this current is filtered in the network $R_L$ = 100 kΩ and 1 µF. The ripple will be less than 10-mV peak, but the response will be slow, with a 0.1 second time constant, and settling of 0.7 second to 0.1% accuracy.

In the precision circuit, an operational amplifier provides a buffered output and also acts as a 2-pole filter. The ripple will be less than 5-mV peak for all frequencies above 1 kHz, and the response time will be much quicker than in Figure 18. However, for input frequencies below 200 Hz, this circuit will have worse ripple than Figure 18. The engineering of the filter time-constants to get adequate response and small enough ripple simply requires a study of the compromises to be made. Inherently, V-to-F converter response can be fast, but F-to-V response can not.

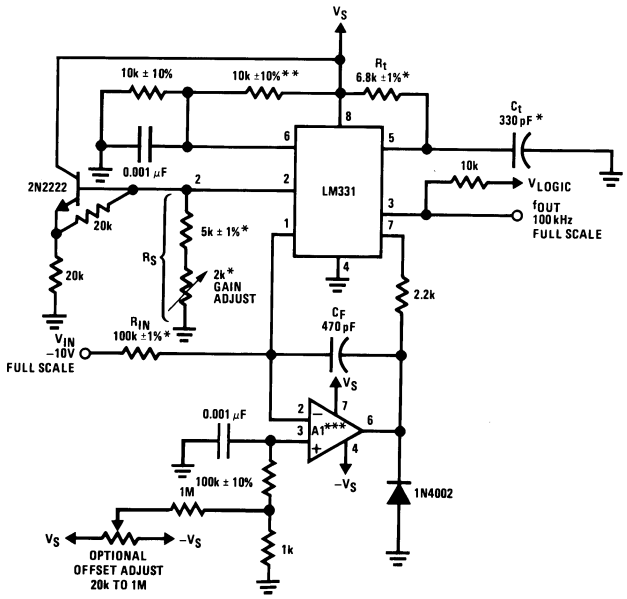


100 kHz Full-Scale, ±0.03% Non-Linearity
*Use stable components with low temperature coefficients.
**This resistor can be 5 kΩ or 10 kΩ for $V_S$=8V to 22V, but must be 10 kΩ for $V_S$=4.5V to 8V.
***Use low offset voltage and low offset current op-amps for A1: recommended types LF411A or LF356.

**Figure 17. Precision Voltage-to-Frequency Converter**

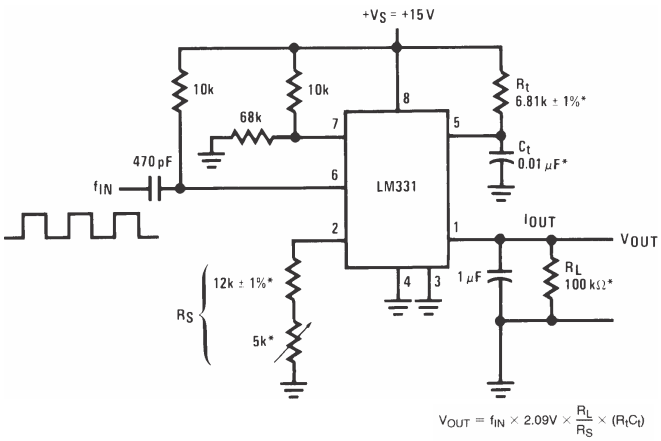


10 kHz Full-Scale, ±0.06% Non-Linearity
*Use stable components with low temperature coefficients.

**Figure 18. Simple Frequency-to-Voltage Converter**

## System Examples (continued)

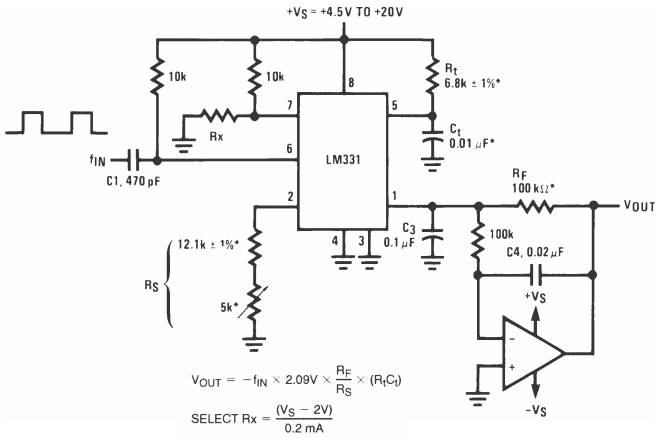


10 kHz Full-Scale With 2-Pole Filter, ±0.01% Non-Linearity Maximum

*Use stable components with low temperature coefficients.

**Figure 19. Precision Frequency-to-Voltage Converter,**

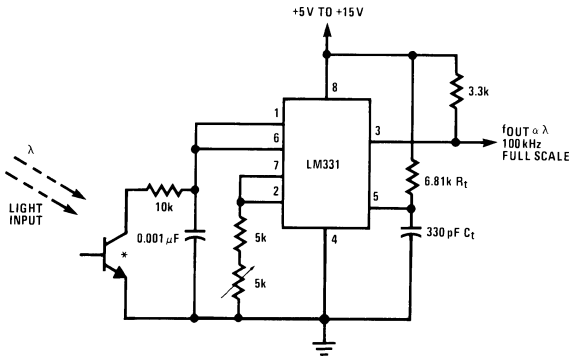


*L14F-1, L14G-1 or L14H-1, photo transistor (General Electric Co.) or similar

**Figure 20. Light Intensity to Frequency Converter**

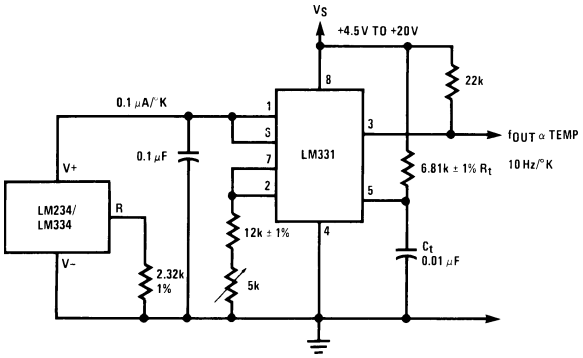


**Figure 21. Temperature to Frequency Converter**

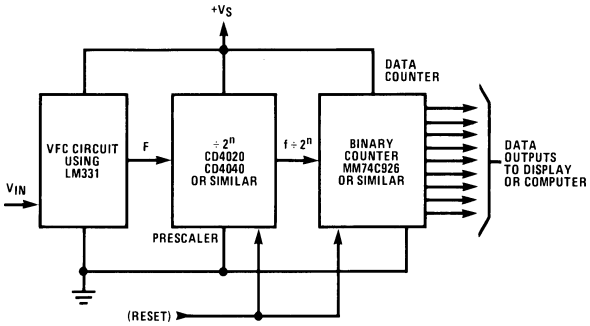


**Figure 22. Long-Term Digital Integrator Using VFC**

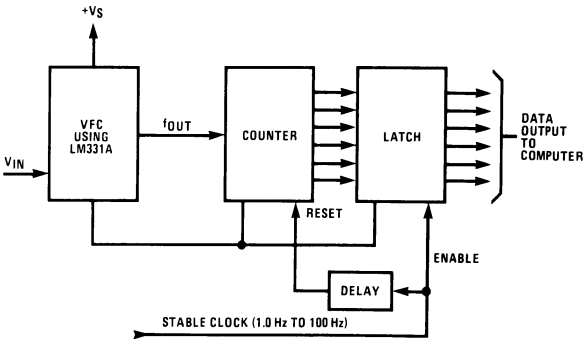


**Figure 23. Basic Analog-to-Digital Converter Using Voltage-to-Frequency Converter**

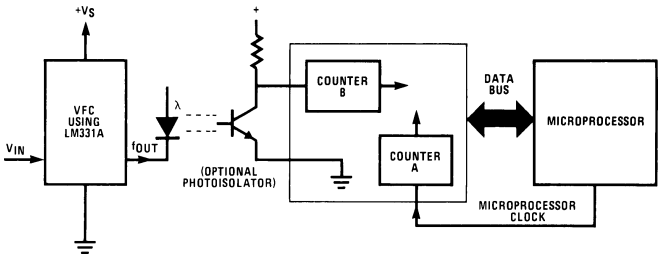


**Figure 24. Analog-to-Digital Converter With Microprocessor**


Copyright © 1999–2015, Texas Instruments Incorporated

## System Examples (continued)

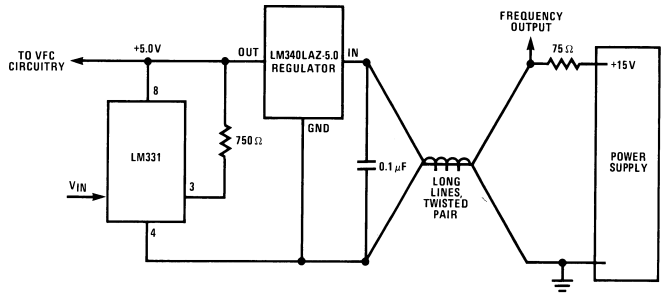


Figure 25. Remote Voltage-to-Frequency Converter With 2-Wire Transmitter and Receiver

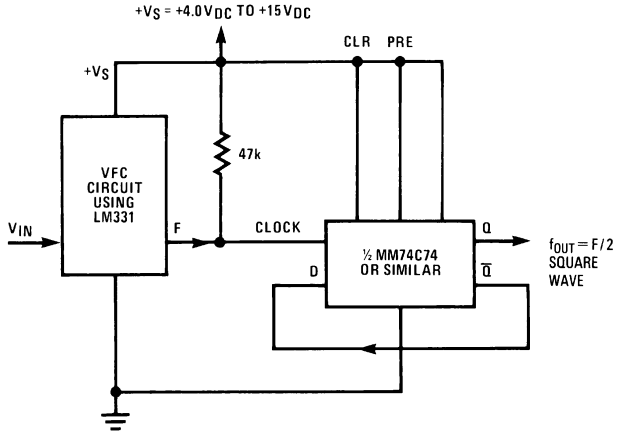


Figure 26. Voltage-to-Frequency Converter With Square-Wave Output Using ÷ 2 Flip-Flop

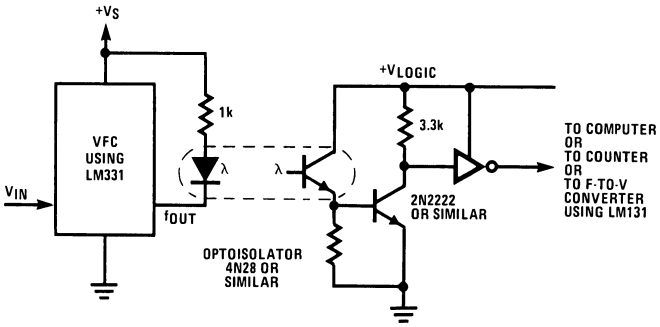


Figure 27. Voltage-to-Frequency Converter With Isolators

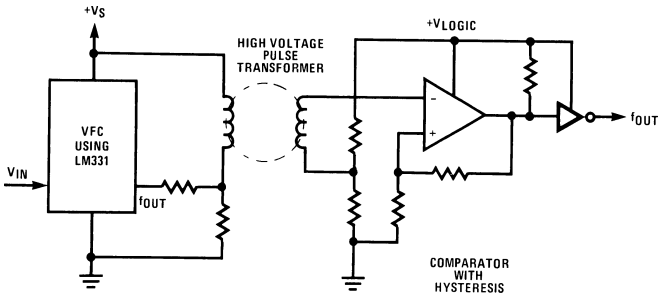


Figure 28. Voltage-to-Frequency Converter With Isolators

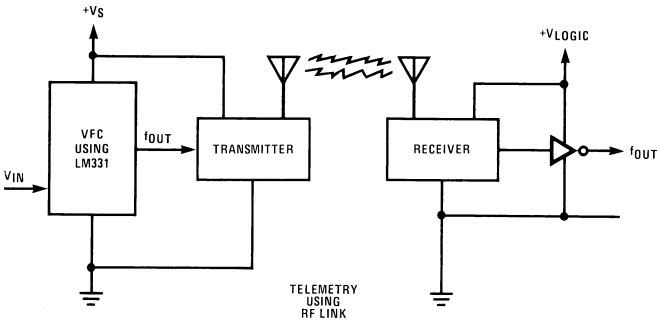


Figure 29. Voltage-to-Frequency Converter With Isolators

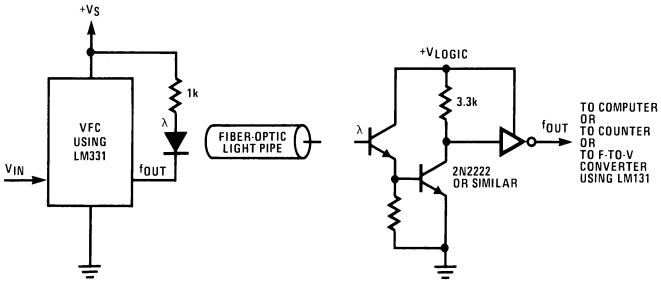


Figure 30. Voltage-to-Frequency Converter With Isolators

## 10 Power Supply Recommendations

The LMx31 can operate over a wide supply voltage range of 4 V to 40 V. For proper operation, the supply pin should be bypassing to ground with a low-ESR, 1-µF capacitor. It is acceptable to use X7R capacitors for this. For systems using higher supply voltages, ensure that the voltage rating for the bypass caps is sufficient.

## 11 Layout

### 11.1 Layout Guidelines

Bypass capacitors must be placed as close as possible to the supply pin. As the LM331 is a through-hole device, it is acceptable to place the bypass capacitor on the bottom layer.

If an input capacitor to ground is used to clean the input signal, the capacitor should be placed close to the supply pin.

Use of a ground plane is recommended to provide a low-impedance ground across the circuit.

### 11.2 Layout Example

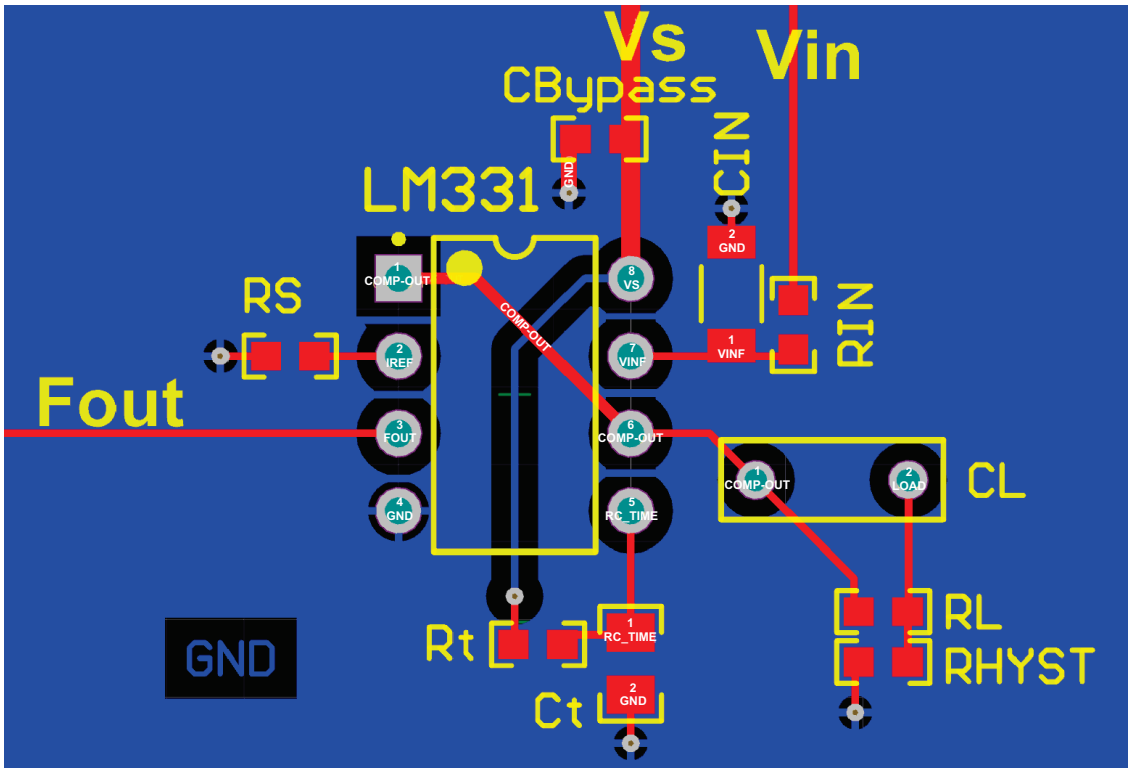


**Figure 31. Layout Example**


Copyright © 1999–2015, Texas Instruments Incorporated

# 12 Device and Documentation Support

## 12.1 Related Links

The table below lists quick access links. Categories include technical documents, support and community resources, tools and software, and quick access to sample or buy.

**Table 1. Related Links**

| PARTS | PRODUCT FOLDER | SAMPLE & BUY | TECHNICAL DOCUMENTS | TOOLS & SOFTWARE | SUPPORT & COMMUNITY |
|---|---|---|---|---|---|
| LM231 | Click here | Click here | Click here | Click here | Click here |
| LM331 | Click here | Click here | Click here | Click here | Click here |

## 12.2 Community Resources

The following links connect to TI community resources. Linked contents are provided "AS IS" by the respective contributors. They do not constitute TI specifications and do not necessarily reflect TI's views; see TI's Terms of Use.

**TI E2E™ Online Community** ***TI's Engineer-to-Engineer (E2E) Community.*** Created to foster collaboration among engineers. At e2e.ti.com, you can ask questions, share knowledge, explore ideas and help solve problems with fellow engineers.

**Design Support** ***TI's Design Support*** Quickly find helpful E2E forums along with design support tools and contact information for technical support.

## 12.3 Trademarks

E2E is a trademark of Texas Instruments.
Teflon is a registered trademark of E.
All other trademarks are the property of their respective owners.

## 12.4 Electrostatic Discharge Caution

These devices have limited built-in ESD protection. The leads should be shorted together or the device placed in conductive foam during storage or handling to prevent electrostatic damage to the MOS gates.

## 12.5 Glossary

SLYZ022 — *TI Glossary*.

This glossary lists and explains terms, acronyms, and definitions.

# 13 Mechanical, Packaging, and Orderable Information

The following pages include mechanical, packaging, and orderable information. This information is the most current data available for the designated devices. This data is subject to change without notice and revision of this document. For browser-based versions of this data sheet, refer to the left-hand navigation.

## PACKAGING INFORMATION

| Orderable Device | Status (1) | Package Type | Package Drawing | Pins | Package Qty | Eco Plan (2) | Lead finish/ Ball material (6) | MSL Peak Temp (3) | Op Temp (°C) | Device Marking (4/5) | Samples |
|---|---|---|---|---|---|---|---|---|---|---|---|
| LM231AN/NOPB | ACTIVE | PDIP | P | 8 | 40 | RoHS & Green | Call TI | Level-1-NA-UNLIM | -25 to 85 | LM 231AN | Samples |
| LM231N/NOPB | ACTIVE | PDIP | P | 8 | 40 | RoHS & Green | Call TI \| SN | Level-1-NA-UNLIM | -25 to 85 | LM 231N | Samples |
| LM331AN/NOPB | ACTIVE | PDIP | P | 8 | 40 | RoHS & Green | Call TI | Level-1-NA-UNLIM | | LM 331AN | Samples |
| LM331N/NOPB | ACTIVE | PDIP | P | 8 | 40 | RoHS & Green | Call TI \| SN | Level-1-NA-UNLIM | 0 to 70 | LM 331N | Samples |

(1) The marketing status values are defined as follows:
**ACTIVE:** Product device recommended for new designs.
**LIFEBUY:** TI has announced that the device will be discontinued, and a lifetime-buy period is in effect.
**NRND:** Not recommended for new designs. Device is in production to support existing customers, but TI does not recommend using this part in a new design.
**PREVIEW:** Device has been announced but is not in production. Samples may or may not be available.
**OBSOLETE:** TI has discontinued the production of the device.

(2) **RoHS:** TI defines "RoHS" to mean semiconductor products that are compliant with the current EU RoHS requirements for all 10 RoHS substances, including the requirement that RoHS substance do not exceed 0.1% by weight in homogeneous materials. Where designed to be soldered at high temperatures, "RoHS" products are suitable for use in specified lead-free processes. TI may reference these types of products as "Pb-Free".
**RoHS Exempt:** TI defines "RoHS Exempt" to mean products that contain lead but are compliant with EU RoHS pursuant to a specific EU RoHS exemption.
**Green:** TI defines "Green" to mean the content of Chlorine (Cl) and Bromine (Br) based flame retardants meet JS709B low halogen requirements of <=1000ppm threshold. Antimony trioxide based flame retardants must also meet the <=1000ppm threshold requirement.

(3) MSL, Peak Temp. - The Moisture Sensitivity Level rating according to the JEDEC industry standard classifications, and peak solder temperature.

(4) There may be additional marking, which relates to the logo, the lot trace code information, or the environmental category on the device.

(5) Multiple Device Markings will be inside parentheses. Only one Device Marking contained in parentheses and separated by a "~" will appear on a device. If a line is indented then it is a continuation of the previous line and the two combined represent the entire Device Marking for that device.

(6) Lead finish/Ball material - Orderable Devices may have multiple material finish options. Finish options are separated by a vertical ruled line. Lead finish/Ball material values may wrap to two lines if the finish value exceeds the maximum column width.

**Important Information and Disclaimer:**The information provided on this page represents TI's knowledge and belief as of the date that it is provided. TI bases its knowledge and belief on information provided by third parties, and makes no representation or warranty as to the accuracy of such information. Efforts are underway to better integrate information from third parties. TI has taken and

continues to take reasonable steps to provide representative and accurate information but may not have conducted destructive testing or chemical analysis on incoming materials and chemicals.
TI and TI suppliers consider certain information to be proprietary, and thus CAS numbers and other limited information may not be available for release.

In no event shall TI's liability arising out of such information exceed the total purchase price of the TI part(s) at issue in this document sold by TI to Customer on an annual basis.

## TUBE

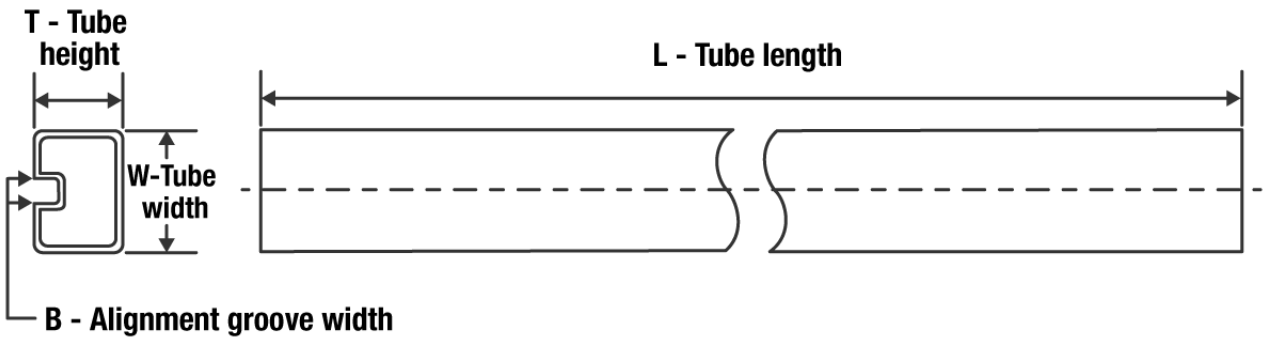


*All dimensions are nominal

| Device | Package Name | Package Type | Pins | SPQ | L (mm) | W (mm) | T (µm) | B (mm) |
|---|---|---|---|---|---|---|---|---|
| LM231AN/NOPB | P | PDIP | 8 | 40 | 502 | 14 | 11938 | 4.32 |
| LM231N/NOPB | P | PDIP | 8 | 40 | 502 | 14 | 11938 | 4.32 |
| LM331AN/NOPB | P | PDIP | 8 | 40 | 502 | 14 | 11938 | 4.32 |
| LM331N/NOPB | P | PDIP | 8 | 40 | 502 | 14 | 11938 | 4.32 |

P (R–PDIP–T8) PLASTIC DUAL–IN–LINE PACKAGE

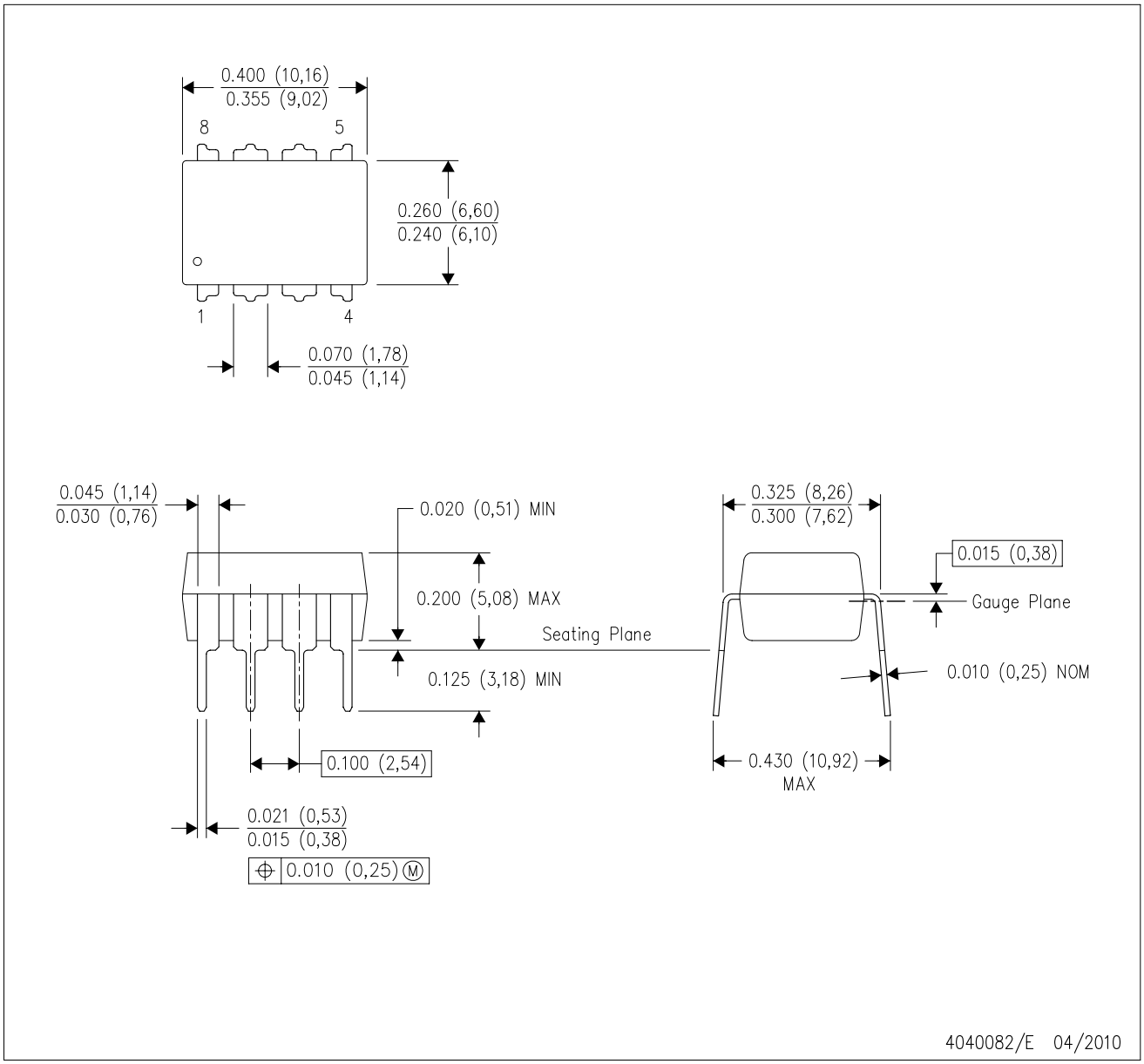


NOTES:
A. All linear dimensions are in inches (millimeters).
B. This drawing is subject to change without notice.
C. Falls within JEDEC MS–001 variation BA.

# IMPORTANT NOTICE AND DISCLAIMER

TI PROVIDES TECHNICAL AND RELIABILITY DATA (INCLUDING DATA SHEETS), DESIGN RESOURCES (INCLUDING REFERENCE DESIGNS), APPLICATION OR OTHER DESIGN ADVICE, WEB TOOLS, SAFETY INFORMATION, AND OTHER RESOURCES “AS IS” AND WITH ALL FAULTS, AND DISCLAIMS ALL WARRANTIES, EXPRESS AND IMPLIED, INCLUDING WITHOUT LIMITATION ANY IMPLIED WARRANTIES OF MERCHANTABILITY, FITNESS FOR A PARTICULAR PURPOSE OR NON-INFRINGEMENT OF THIRD PARTY INTELLECTUAL PROPERTY RIGHTS.

These resources are intended for skilled developers designing with TI products. You are solely responsible for (1) selecting the appropriate TI products for your application, (2) designing, validating and testing your application, and (3) ensuring your application meets applicable standards, and any other safety, security, regulatory or other requirements.

These resources are subject to change without notice. TI grants you permission to use these resources only for development of an application that uses the TI products described in the resource. Other reproduction and display of these resources is prohibited. No license is granted to any other TI intellectual property right or to any third party intellectual property right. TI disclaims responsibility for, and you will fully indemnify TI and its representatives against, any claims, damages, costs, losses, and liabilities arising out of your use of these resources.

TI’s products are provided subject to TI’s Terms of Sale or other applicable terms available either on ti.com or provided in conjunction with such TI products. TI’s provision of these resources does not expand or otherwise alter TI’s applicable warranties or warranty disclaimers for TI products.

TI objects to and rejects any additional or different terms you may have proposed.

Mailing Address: Texas Instruments, Post Office Box 655303, Dallas, Texas 75265
Copyright © 2022, Texas Instruments Incorporated